700HPPK

High Pressure Pneumatic Test Pump

Instructions

Introduction

The Fluke 700HPP High Pressure Pneumatic Test Pump (the Product) is a portable device that produces precise pressures up to 21 MPa (3000 psi). The 700HPPK (the Kit) includes the Product and a High Pressure Calibration Manifold (HPM) with hose.

Contact Fluke Calibration

To contact Fluke Calibration, call one of the following telephone numbers:

- Technical Support USA: 1-877-355-3225
- Calibration/Repair USA: 1-877-355-3225
- Canada: 1-800-36-FLUKE (1-800-363-5853)
- Europe: +31-40-2675-200
- Japan: +81-3-6714-3114
- Singapore: +65-6799-5566
- China: +86-400-810-3435
- Brazil: +55-11-3759-7600
- Anywhere in the world: +1-425-446-6110

To see product information or download manuals and the latest manual supplements, visit Fluke Calibration's website at www.flukecal.com.

To register your product, visit http://flukecal.com/register-product.

Safety Information

A **Warning** identifies conditions and procedures that are dangerous to the user. A **Caution** identifies conditions and procedures that can cause damage to the Product or the equipment under test.

⚠Warning

To prevent personal injury:

- **Read all safety information before you use the Product.**
- **Use the Product only as specified, or the protection supplied by the Product can be compromised.**
- **Carefully read all instructions.**
- **Do not use the Product if it operates incorrectly.**
- **Do not use the Product if it is altered or damaged.**
- **Disable the Product if it is damaged.**
- **Do not attempt to operate the Product above its rated pressure.**
- **Avoid tipping the Product so that it will fall over.**
- **Use care when working with this Product. Do not drop the Product or strike it with sharp objects.**
- **Carefully follow the cleaning and decontamination instructions in the manual. Do not use unapproved solvents or cleaners on the product.**

Symbols

The symbols shown in Table 1 are found in these instructions or on the Product.

Table 1. Symbols

Symbol	Definition
⚠	WARNING.RISK OF DANGER.
	Consult user documentation.
	Certified by CSA Group to North American safety standards.
CE	Conforms to European Union directives.
	Conforms to relevant Australian Safety and EMC standards.
	This product complies with the WEEE Directive marking requirements. The affixed label indicates that you must not discard this electrical/electronic product in domestic household waste. Product Category: With reference to the equipment types in the WEEE Directive Annex I, this product is classed as category 9 "Monitoring and Control Instrumentation" product. Do not dispose of this product as unsorted municipal waste.

PN 4784850
September 2016
© 2016 Fluke Corporation, All rights reserved. Specifications are subject to change without notice. All product names are trademarks of their respective companies.

원문: Fluke Calibration 700HPPK-NPT 700HPPK Instruction Sheet · 제조사 원문 자료입니다. 사양은 제조사 사정에 따라 변경될 수 있습니다.

Box Contents

The Product ships with

- 700HPP High Pressure Pneumatic Test Pump
- 700HPM High Pressure Calibration Manifold with hose (700HPPK only)
- Canvas carrying bag
- High Pressure Pneumatic Quick Service Kit
- Dry pac refill
- Silicone grease
- High Pressure hose
- Instructions
- Fittings (as listed in Table 2)

Table 2. Pump Fittings

Configuration Ordered	M16- ¼ NPT (Male)	M16-⅛ NPT (Male)	M16-¼ BSP (Male)	M16-⅛ BSP (Male)	M16-M14 (Male)	¼ NPT (F)-M20x 1.5 (Male)
700HPP-NPT	1	1	-	-	-	-
700HPPK-NPT						
700HPP-BSP	-	-	1	1	-	-
700HPPK-BSP						
700HPP-MET	1	-	-	-	1	1
700HPPK-MET						

Safe Operation

To verify safe operation of the Product after maintenance or repair:

1. Wear eye protection and securely attach a pressure gauge to the hose or accessory fitting of the calibration manifold (700HPPK only). Use any approved (properly-rated) adapter as required.
2. Close the upper vent valve (700HPPK) and slowly pressurize the pump/gauge system to 21 MPa (3000 psi, 210 bar).
3. Maintain pressure for 60 seconds.
4. Use the upper vent valve on the calibration manifold (700HPPK only) to slowly release the pressure. Pressure can be vented using the vent valve at the base of the pump when using the 700HPP.

Features

The features and components of the Product are shown in Figure 1 and Table 3.

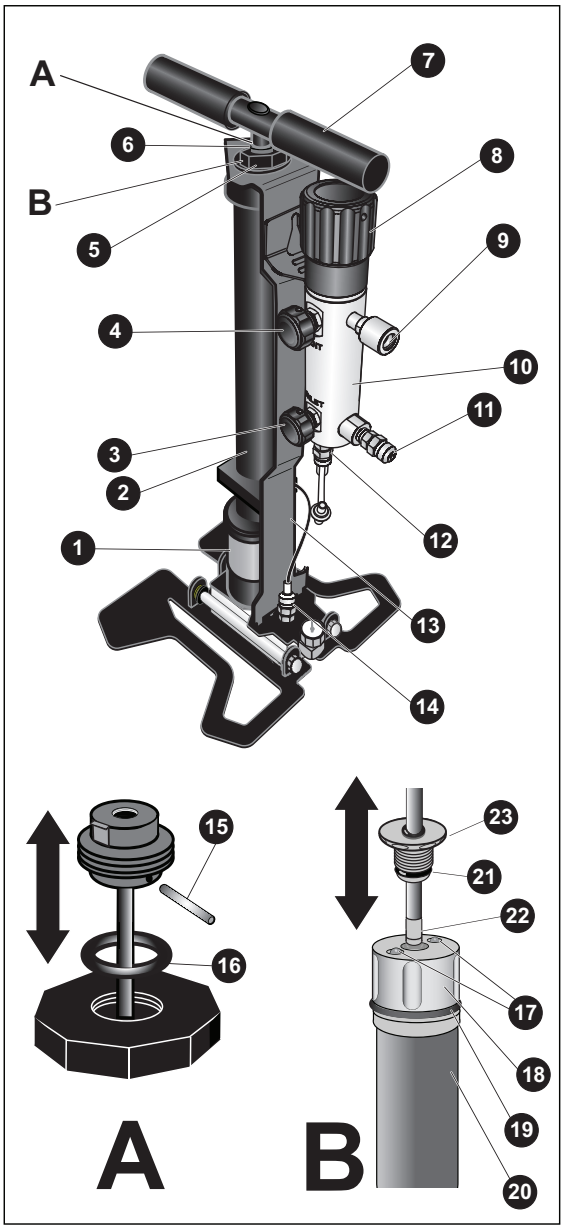

hza01.eps

Figure 1. Features and Components

원문: Fluke Calibration 700HPPK-NPT 700HPPK Instruction Sheet · 제조사 원문 자료입니다. 사양은 제조사 사정에 따라 변경될 수 있습니다.

Table 3. Features and Components

No.	Item/Function
1	Desiccant tube
2	Pump shaft
3	Inlet valve
4	Vent valve
5	Outer body end cap
6	Handle connector
7	Pump handle
8	Variable volume
9	Reference gauge connection port
10	Calibration manifold
11	Unit Under Test (UUT) connection port with replaceable filter
12	Inlet port
13	Pump bracket
14	Pump connection port
15	Pin
16	O-Ring
17	Ball bearings
18	Large piston nut
19	Shaft seal
20	Pump shaft
21	Ball/seal retainer nut black seal
22	Piston seal (green)
23	Ball/seal retainer nut

Set Up

700HPP (Pump only)

1. Take the pump out of the box.
2. Open the folding legs for stability.
3. Attach one end of the hose to the port on the pump base (hand tighten only).
4. Connect the other end of the hose to the Unit Under Test (UUT) with the standard fittings provided.
5. Before you generate pressure, make sure the vent valve located at the bottom of the pump next to the desiccant tube is completely closed.

700HPPK (Pump kit)

1. Take the pump out of the box.
2. Open the folding legs for stability.
3. Attach the calibration manifold to the pump bracket as shown in Figure 1. The calibration manifold is detachable due to the quick detent pins.
4. Attach one end of the first hose to the port at the base of the pump (hand tighten only).
5. Wind the hose around the hooks of the bracket and attach the other end to the inlet port at the bottom of the calibration manifold (hand tighten only).
6. Attach the second hose to the UUT with the standard fittings provided and the other end to the UUT port on the calibration manifold (hand tighten only).
7. Install the reference gauge to the reference port of the calibration manifold. The reference gauge connection is a 1/4 NPT female connection that seals on an O-ring. PTFE tape is not required.

Operation

The subsequent sections explain Product operation.

700HPP Operation

To operate the pump:

1. Attach the free end of the hose to the device to be pressurized with the fittings provided.
2. Make sure that the vent valve at the bottom of the Product is closed.
3. Pump the Product to generate pressure.

   For maximum efficiency, use full pump strokes. Generally, 21 MPa (3000 psi) can be generated within 20 seconds when full strokes are used (for volumes of approximately 10 cm^3).
4. To vent the pressure, use the vent valve on the base of the pump.
5. After use, wind the hose around the hooks for ease of use and portability.
6. Fold the pump base and place in the bag.

700HPPK Operation

To operate the pump and calibration manifold:

1. The 700HPPK can be operated with the calibration manifold attached as shown in Figure 1 or detached for easier operation.
2. Make sure the “inlet” valve is set to open on the calibration manifold and the two vent valves are firmly closed (at the base of the pump and on the calibration manifold marked “VENT”). Attach the reference gauge to the port nearest to the top of the calibration manifold (reference gauge connection port).
3. Attach the UUT (external) line to the port towards the lower end of the calibration manifold.
4. For each pressure that you measure, make sure that the reference gauge shows zero pressure. If not, open the vent valve on the calibration manifold and zero the reference gauge manually.
5. Close the vent valve.
6. Pump the Product to generate pressure.

   For maximum efficiency, use full pump strokes. Generally, 21 MPa (3000 psi) can be generated within 20 seconds when full strokes are used (for volumes of approximately 10 cm^3).
7. Once the applied pressure comes near the targeted pressure, close the inlet valve on the calibration manifold. This will help to stabilize the pressure faster.
8. Use the black variable-volume knob on the calibration manifold to adjust the pressure and achieve exact target pressure (cardinal point) on the reference gauge.

   Note

   Do not use the gauge at the bottom of the pump for calibration.
9. Take readings from both reference and UUT pressure gauges for calibration.

원문: Fluke Calibration 700HPPK-NPT 700HPPK Instruction Sheet · 제조사 원문 자료입니다. 사양은 제조사 사정에 따라 변경될 수 있습니다.

10. Use the vent valve on the calibration manifold to slowly reduce pressure. Use the pump to increase pressure to move to the next pressure reading. Keep the inlet valve closed if the pump is not being used.
11. Use the variable volume for fine adjustment of the pressure to achieve the cardinal point and take the measurement at this point. Repeat the above steps to take all readings at the predetermined pressure points.
12. Upon completion of the tests, open the VENT valve to release all pressure inside the calibration manifold. The inlet valve needs to be opened to release any pressure built up in the pump.
13. Fold the pump base and place in the bag.

Maintenance

Clean the Pump

To clean the pump of any contaminants accumulated during use:

1. Remove the hose from the base of the pump. The fitting on the pump is self seating.
2. Completely remove the vent valve screw at the base of the pump.
3. Pump the unit to push the contaminants out from the vent valve opening.
4. Once the contaminants stop coming out, replace the vent screw and reconnect the hose.

Clean the Calibration Manifold (700HPPK Only)

To clean the calibration manifold:

1. Remove the hose that connects the calibration manifold to the UUT.
2. Unscrew the fitting from the calibration manifold with a 22 mm wrench and remove the screen inside.
3. Tilt the calibration manifold slightly to drain all the liquid contaminants from inside that port
4. Clean the screen of any particulates (or replace if necessary).
5. Reinstall the screen and tighten the fitting.

Lubricate the Pump

If generation of pressure becomes difficult due to friction in the pump, then the pump may require lubrication. Depending on usage, lubrication of the pump may be required monthly. Lack of lubrication can result in premature wearing of seals.

To lubricate the pump:

1. Open the vent valve at the bottom of the pump.
2. Pull up the handle of the pump approximately 15 cm (6 inches).
3. Hold the exposed metal shaft of the pump by one hand and turn the handle counterclockwise to remove the handle from the unit.

   Note

   A wrench may be required to hold the pump shaft in place when you rotate the pump handle counterclockwise.
4. By hand, unscrew the hose fitting at the bottom of the pump to remove the hose.
5. By hand, unscrew the large plastic nut located at the top of the pump.
6. By hand, unscrew the large black shaft (❷) that is above and attached to the desiccant tube. The entire manifold/desiccant assembly should come off of the pump base.
7. Pull the manifold/desiccant assembly up all the way to expose the metal pump shaft.
8. Pull up and fully extend the metal pump shaft.
9. Apply a thin coating of the provided lubricant to the surface exposed below the top metal shaft.
10. To reassemble the pump, reverse these steps.
11. Follow the *Safe Operation* procedure at the beginning of this document to ensure the pump is in proper operating condition.

원문: Fluke Calibration 700HPPK-NPT 700HPPK Instruction Sheet · 제조사 원문 자료입니다. 사양은 제조사 사정에 따라 변경될 수 있습니다.

Quick Service

For quick service of pump, perform steps 1 through 7 from *Lubricate the Pump* before you do the steps below.

To replace the piston seal, see Figures 1, 2 and Table 3:

1. With the pump handle removed from the *Lubricate the Pump* procedure, use a 20 mm wrench to unscrew the handle connector from the shaft (6).
2. Lift the handle connector to expose the O-ring (16).
3. Remove the O-ring to expose the pin (15) on the bottom of the handle connector.
4. Push the pin from one side and then pull it out of the handle connector.

   Note

   When you reassemble the pump, make sure that this O-ring is placed securely in its groove.
5. Use a 30 mm wrench to unscrew the brass outer body end cap and slide off the pump shaft. See Figure 2.
6. Hold the lower nut (18) with a 24 mm wrench and then with a 17 mm wrench, unscrew the exposed ball/seal retainer nut (23).
7. Pull the piston rod up and out of the pump. Do not lose the two ball bearings (17) in the top of the pump.
8. Below the large lower nut on the pump, there is a large black seal (19). If it is worn, replace it. When you reassemble the pump, add small amount of silicone grease to this seal.
9. Remove the small diameter piston rod.
10. On the bottom of the small diameter piston rod, there is a small black seal (21). If it is worn, replace it. The seal on top of the ball/seal retainer nut should not need replacement.
11. On the bottom of the piston, there is a small green seal (22).Carefully remove this seal and apply a small amount of silicone grease to the replacement.

Do these steps in reverse to reassemble the pump.

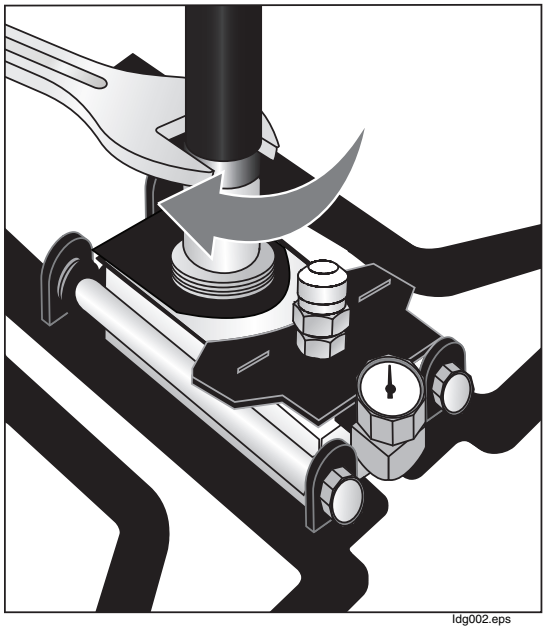

Figure 2. Loosen Outer End Cap

Accessories

These accessories are available:

- 2700G Reference Pressure Gauge
- 700G Precision Pressure Gauge
- High Pressure Pneumatic Manifold Full Service Kit
- High Pressure Pneumatic Pump Quick Service Kit (Included standard)
- High Pressure Pneumatic Pump Full Service Kit

Adapter Kits	
NPT Premium Adapter Kit	3/8 NPT Male, 1/2 NPT Male, 1/8 NPT female, 1/4 NPT male swivel, 1/4 NPT Female swivel
BSP Premium Adapter Kit	3/8 BSP Male, 1/2 BSP Male, 1/8 BSP female, 1/4 BSP male swivel, 1/4 BSP female swivel
Metric Premium Adapter Kit	1/8 NPT male, 1/2 BSP female, M20 male swivel, M20 female swivel

원문: Fluke Calibration 700HPPK-NPT 700HPPK Instruction Sheet · 제조사 원문 자료입니다. 사양은 제조사 사정에 따라 변경될 수 있습니다.

Specifications

Operating Temperature ..... -20 °C to +50 °C
Storage Temperature ..... -20 °C to +70 °C
Operating Humidity..... 5 % to 95 % relative humidity, non-condensing
Operating Altitude..... <2000 m
Pressure Range ..... 0 MPa to 21 MPa (3000 psi)

Adjustment Resolution ..... 0.05 % of reading

Wetted Materials

(700HPP)..... Acetal, Aluminum, Brass, Silicone Loctite 577, Nitrile, Polypropylene, PTFE, Steel, Stainless Steel, Viton

(700HPM) ..... Aluminum, Stainless Steel, Nitrile, Urethane, PVC

Leak Rate (700HPPK,
with isolation valve closed)..... 0.01 % reading
Weight ..... 7257 g (16.0 lb)

Dimensions ..... 740 x 295 x 155 mm
(29.13 x 11.61 x 6.10 in)

Safety:

General ..... IEC 61010-1

LIMITED WARRANTY AND LIMITATION OF LIABILITY

This Fluke product will be free from defects in material and workmanship for one year from the date of purchase. This warranty does not cover fuses, disposable batteries, or damage from accident, neglect, misuse, alteration, contamination, or abnormal conditions of operation or handling. Resellers are not authorized to extend any other warranty on Fluke's behalf. To obtain service during the warranty period, contact your nearest Fluke authorized service center to obtain return authorization information, then send the product to that Service Center with a description of the problem.

THIS WARRANTY IS YOUR ONLY REMEDY. NO OTHER WARRANTIES, SUCH AS FITNESS FOR A PARTICULAR PURPOSE, ARE EXPRESSED OR IMPLIED. FLUKE IS NOT LIABLE FOR ANY SPECIAL, INDIRECT, INCIDENTAL OR CONSEQUENTIAL DAMAGES OR LOSSES, ARISING FROM ANY CAUSE OR THEORY. Since some states or countries do not allow the exclusion or limitation of an implied warranty or of incidental or consequential damages, this limitation of liability may not apply to you.

Fluke Corporation
P.O. Box 9090
Everett, WA 98206-9090
U.S.A.

Fluke Europe B.V.
P.O. Box 1186
5602 BD Eindhoven
The Netherlands

11/99

원문: Fluke Calibration 700HPPK-NPT 700HPPK Instruction Sheet · 제조사 원문 자료입니다. 사양은 제조사 사정에 따라 변경될 수 있습니다.