ADT780 Pressure Controller

원문: Additel ADT780S ADT780S 매뉴얼 · 제조사 원문 자료입니다. 사양은 제조사 사정에 따라 변경될 수 있습니다.

원문: Additel ADT780S ADT780S 매뉴얼 · 제조사 원문 자료입니다. 사양은 제조사 사정에 따라 변경될 수 있습니다.

ADT780 Pressure Controller

User Manual

(Version No.: 201507V01)

(Please download the latest version via www.additel.com)

Additel Corporation.

원문: Additel ADT780S ADT780S 매뉴얼 · 제조사 원문 자료입니다. 사양은 제조사 사정에 따라 변경될 수 있습니다.

원문: Additel ADT780S ADT780S 매뉴얼 · 제조사 원문 자료입니다. 사양은 제조사 사정에 따라 변경될 수 있습니다.

Statement

This manual applies to ADT780 pressure controller series designed and produced by Additel Corporation.
This manual is subject to change without notice.

원문: Additel ADT780S ADT780S 매뉴얼 · 제조사 원문 자료입니다. 사양은 제조사 사정에 따라 변경될 수 있습니다.

원문: Additel ADT780S ADT780S 매뉴얼 · 제조사 원문 자료입니다. 사양은 제조사 사정에 따라 변경될 수 있습니다.

CONTENTS

I. SAFETY NOTES ····· **1**
1.1 SAFETY AND CAUTION ····· 1
1.2 LIABILITY ····· 1
1.3 GENERAL SAFETY ····· 1
1.4 WARNING ····· 2
II. INTRODUCTION ····· **2**
2.1 OVERVIEW ····· 2
2.2 FUNCTIONS ····· 4
2.3 TECHNICAL SPECIFICATION ····· 4
III. INSTALLATION ····· **7**
3.1 INSTALLATION ····· 7
3.2 PRESSURE CONNECTION ····· 7
3.3 ELECTRICAL MENU ····· 9
3.4 COMMUNICATION MENU ····· 10
3.5 PRESSURE MODULE CONNECTION ····· 11
3.6 ELECTRIC SIGNAL MEASUREMENT AND BUS COMMUNICATION CONNECTION ····· 12
IV. POWER-ON ····· **14**
4.1 POWER-ON SEQUENCE ····· 14
4.2 LANGUAGE SETUP ····· 14
4.3 DATE AND TIME SETUP ····· 14
4.4 PRESSURE OUTPUT OF SETUP ····· 15
V. OPERATION ····· **15**

원문: Additel ADT780S ADT780S 매뉴얼 · 제조사 원문 자료입니다. 사양은 제조사 사정에 따라 변경될 수 있습니다.

Additel

5.1 PRESSURE SETUP ····· 15
5.2 UNIT SETUP ····· 15
5.3 MEASUREMENT ····· 15
5.4 CONTROL ····· 16
5.5 EMPTY ····· 16
5.6 PROGRAM SETUP ····· 17
5.7 CURRENT/VOLTAGE MEASUREMENT ····· 17
5.8 SWITCH MEASUREMENT ····· 17
5.9 CONTROL SETUP ····· 17
5.10 PRESSURE ZERO ····· 19
5.11 DISPLAY SETUP ····· 19
5.12 PRESSURE HEAD CORRECTION ····· 19
5.13 DO CONFIGURATION ····· 20
5.14 HART COMMUNICATION ····· 20
5.14.1 Polling ····· 20
5.14.2 Process Quantity ····· 21
5.14.3 Setup ····· 21
5.14.4 Diagnosis ····· 21
5.15 PROFIBUS PA COMMUNICATION ····· 23
5.15.1 Function Description ····· 23
5.15.2 Equipment Description Document ····· 23
5.15.3 Connection and Search ····· 24
5.15.4 Process Quantities ····· 24
5.15.5 Transmitter Operation ····· 24
5.16 LEAK TEST ····· 25

원문: Additel ADT780S ADT780S 매뉴얼 · 제조사 원문 자료입니다. 사양은 제조사 사정에 따라 변경될 수 있습니다.

5.16.1 Setup ····· 25
5.16.2 Execution ····· 25
5.17 SWITCH TEST ····· 25
5.17.1 Setup ····· 25
5.17.2 Execution ····· 26
5.18 AUTOMATIC STEPPING ····· 26
5.18.1 Setting ····· 26
5.18.2 Execution ····· 26
5.19 DECOMPRESSOR ····· 27
5.19.1 Setup ····· 27
5.19.2 Execution ····· 27
VI. REMOTE COMMUNICATION ····· 28
6.1 COMMUNICATION SETTING ····· 28
6.1.1 Communication Setting –RS232 ····· 28
6.1.2 Communication Setting –WIFI ····· 28
6.1.3 Communication Setting – LAN ····· 28
6.2 COMMUNICATION COMMANDS ····· 29
VII. MAINTENANCE ····· 29
7.1 SYSTEM AND PRODUCT INFORMATION ····· 29
7.2 FIRMWARE UPDATES ····· 29
7.3 CALIBRATION ····· 29
7.3.1 Internal pressure module and external pressure module calibration ····· 30
7.3.2 Atmospheric pressure module and vacuum module calibration ····· 33
7.3.3 Electrical signals measurement standards ····· 34
7.3.4 Atmospheric pressure module calibration ····· 34

원문: Additel ADT780S ADT780S 매뉴얼 · 제조사 원문 자료입니다. 사양은 제조사 사정에 따라 변경될 수 있습니다.

Additel

7.3.5 Self-tuning ····· 35
7.4 UNINSTALLATION ····· 35
7.5 CHANGEABLE PARTS ····· 36
7.6 FUSE REPLACEMENT ····· 36
7.7 FILTER REPLACEMENT ····· 37
VIII. TROUBLESHOOTING ····· 38
IX. APPENDIX ····· 40
9.1 TRANSPORTATION AND STORAGE ····· 40
9.1.2 Packaging ····· 40
9.1.3 Transportation ····· 40
9.1.4 Storage ····· 40
9.2 PRESSURE UNIT LIST ····· 40
9.3 SCPI List ····· 41

원문: Additel ADT780S ADT780S 매뉴얼 · 제조사 원문 자료입니다. 사양은 제조사 사정에 따라 변경될 수 있습니다.

I. Safety Notes

1.1 Safety and Caution

The mark ⚠ on the controller means that the user must pay attention to operation instructions in the manual before operation.

The mark ⚠ on the controller means that high voltage may exist at the terminal or jack. Direct contact should be avoided.

The mark ⚠ Warning in the manual refers to high voltage or high pressure where injury could occur.

The mark ⚠ Caution in the manual Indicates product damage may occur if operation instructions are not closely followed. Any damage resulting in incorrect use of the product is not covered under the product warranty.

1.2 Liability

- ◆ Please note the following safety instructions;
- ◆ Please read the user manual before operation;
- ◆ Only operate with recommended media;
- ◆ Do not use the controller if damage is suspected;
- ◆ This product should be maintained by Additel or an authorized agent;
- ◆ Ensure the ground is connected with the AC power.

1.3 General Safety

- ◆ The controller should not be subject to strong vibration, impact, high temperature, high humidity or strong magnetic influence;

원문: Additel ADT780S ADT780S 매뉴얼 · 제조사 원문 자료입니다. 사양은 제조사 사정에 따라 변경될 수 있습니다.

Additel

- ◆ Do not use objects to clean or maintenance the controller that are not warranted;
- ◆ The power voltage of the controller could cause physical injury. Even if the power supply is off, power could be temporarily stored;
- ◆ Ensure the controller is completely dry of any condensation that may have occurred.

1.4 Warning

- ◆ ⚠High Pressure means the potential risk of high pressure air exist. The high pressure system can be installed and operated by professionals only;
- ◆ Pipes, valves and other facilities connected with the controller must be rated to the maximum pressure and the sufficient safety redundancy considered;
- ◆ Clean, dry and noncorrosive air shall be used. Oxygen should not be used as the control media;
- ◆ Do not use in dusty, steamy or corrosive gas circumstances;
- ◆ Do not use in explosive or dangerous environments;
- ◆ Ensure the controller is not used under overvoltage condition;
- ◆ When using nitrogen or inert gas as the media, the sufficient ventilation shall be ensured in the operation area.

II. Introduction

2.1 Overview

ADT780 Pressure Controller series can be used for a wide variety of application tests, calibrations and verifications.

ADT780 Pressure Controller has two range-dependent base units that determine the maximum pressures listed below. Each base requires an external gas supply or Additel Electric Pump to control pressure.

- -0.1MPa ~ 7MPa; one pressure module with the range of 7MPa is embedded;

원문: Additel ADT780S ADT780S 매뉴얼 · 제조사 원문 자료입니다. 사양은 제조사 사정에 따라 변경될 수 있습니다.

- -0.1MPa ~ 21MPa; one pressure module with the range of 21MPa is embedded;

ADT780 can be equipped externally or internally with Additel 160A series of pressure modules.

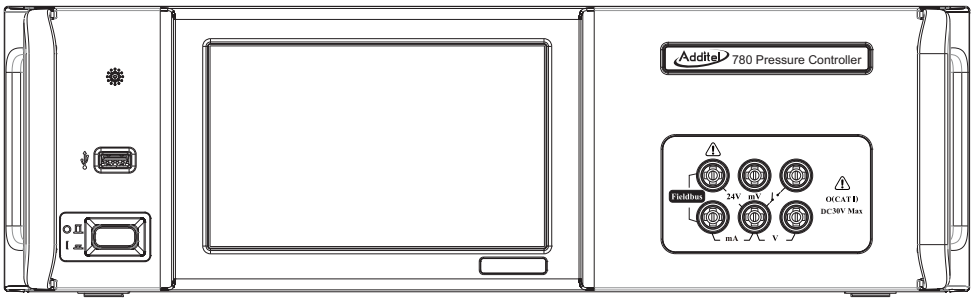

Fig. 2-1 Basic Structure of ADT780 front panel

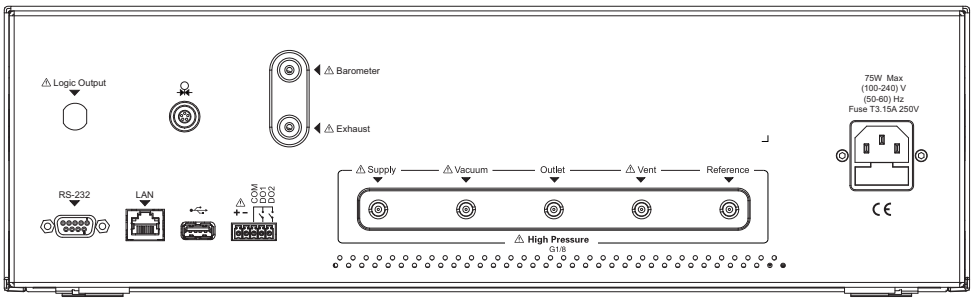

Fig. 2-2 Basic Structure of ADT780 rear panel

원문: Additel ADT780S ADT780S 매뉴얼 · 제조사 원문 자료입니다. 사양은 제조사 사정에 따라 변경될 수 있습니다.

Additel

2.2 Functions

- ◆ Full auto control output pressure;
- ◆ Can either be connected with pressure modules externally for control output ;
- ◆ ADT780 output control defaults to the internal sensor when an external sensor is not connected;
- ◆ ADT780 is embedded with 40Pa barometric pressure sensor (optional 11Pa) and can realize the absolute pressure and gage pressure;
- ◆ DC24V power output;
- ◆ 2-way DO digital output;
- ◆ DC±30mA current measurement or voltage measurement (±30V, ±300mV);
- ◆ Pressure switch capability;
- ◆ 800x480 color touch-screen display control operation and good HMI;
- ◆ Two modes: controller mode and calibrator mode;
- ◆ Main USB menu and configurable with a USB flash disk externally;
- ◆ RS232, LAN and WiFi menus;
- ◆ HART Profibus protocol calibrates HART equipment;
- ◆ Profibus PA protocols;
- ◆ WINCE operation system.

2.3 Technical Specification

- ◆ Technical indexes:

원문: Additel ADT780S ADT780S 매뉴얼 · 제조사 원문 자료입니다. 사양은 제조사 사정에 따라 변경될 수 있습니다.

Power supply	(100~240)VAC 50/60 Hz, maximum power consumption: 75 W	
Operation temperature	(0~50)°C	
Storage temperature	(-20~70)°C	
Working environment humidity	<90%, non-condensed	
Display panel	7” color display, resolution: 800×480	
Weight	15kg	
Dimensions	3U cabinet (L×W×H = 419×440×132)mm	
Working media	Nitrogen or dry and clean compressed air	
Pressure output ports	Supply and outlet port: G1/8 female thread	
Air source	110% ~120% of the pressure range	
Pressure control range	(-0.095~7) MPa or (-0.095~21) MPa	
Pressure module	(-0.1~7)MPa	See ordering information for options and performance specifications. Control sensor can be based on internal or external sensors.①
Pressure module	(−0.1~21)MPa	See ordering information for options and performance specifications. Control sensor can be based on internal or external sensors.①
Barometric pressure module	(60~110)kPa, accuracuy is 40Pa (11Pa is optional)	
Pressure unit	See Annex 9.2 for the pressure unit list	
Control stability	0.003% FS (stability based on % FS of control sensor) ②	
Internal capacity	500cc	
Pressure control velocity	20s (20%FS, external connection of 50cc)	
Control precision	Depending on the selected pressure control module	
Digital output	Two-way digital output (DO), programmable, source-less output, load-carrying capacity, 1A/DC24V	
	One-way source output, programmable, load-carrying capacity DC24V@200mA	

Table 2-1 Technical Indexes

원문: Additel ADT780S ADT780S 매뉴얼 · 제조사 원문 자료입니다. 사양은 제조사 사정에 따라 변경될 수 있습니다.

Additel

① The pressure range and control is determinant of the pressure module selected. Beyond its range, the measurement value can be displayed only. 0.01%FS or 0.05% FS external connection modules can be selected.

② The control stability is correspondenting with pressure range.

◆ Barometer Measurement Uncertainty

Sensor/Mode	Gauge	Absolute
ADT160-02-CPXX	N/A	40 Pa ①
ADT160-01-APXXQ	3 Pa ②	N/A

Table 2-2 Technical indexes of electric signal measurement technology

① 40 Pa uncertainty (K=2) includes calibration uncertainty, linearity, and long term stability (<30 Pa per year). Barometer range of 60 to 110 kPa.

② Combined linearity, hysteresis, and repeatability. Add 3 Pa when used in gauge mode. When the absolute pressure type of ADT160-01-APXXQ is switched to the gauge pressure type, the zeroing must be implemented by user. The ADT780 controller will clear the value difference between ADT160-01-APXXQ module and barometer module automatically.

◆ Technical indexes of electrical signal measurement (ambient temperature 20℃ 5℃, yearly accuracy)

Measurement	Range	Resolution	Accuracy
Voltage (V)	(-30.0000~30.0000)V	0.1mV	(0.01%RD+1.5mV)
Voltage (mV)	(-300.000~300.000) mV	1μV	(0.01%RD+15μV)
Current (mA)	(-30.0000~30.0000) mA	0.1μA	(0.01%RD+1.5μA)
On-off	If the switch has the tour inspection voltage, the voltage scope shall be DC 3V ~ DC 24V.		

Table 2-3 Technical indexes of electric signal measurement technology

Note 1: When the ambient temperature exceeds the range from 15-25℃, the temperature coefficient for voltage & current measurement range: ±0.0005FS /℃.

원문: Additel ADT780S ADT780S 매뉴얼 · 제조사 원문 자료입니다. 사양은 제조사 사정에 따라 변경될 수 있습니다.

Note 2: Input characteristics:

(1) Voltage measurement range: input impedance >1MΩ,max. input voltage at the port: ±300VDC;

(2) Current measurement range: input impedance <10Ω, maximum input current at the port: ±1A DC.

◆ DC24V output, accuracy: ±0.24V, 50mA;

III. Installation

3.1 Installation

ADT780 pressure controller can used on a bench or rack mounted. A rack mount kit may also be used to install the controller on 19” (3U) cabinet. The rack mount kit includes two fins and four installation screws. See Fig. 3-1:

Warning When in operation gas may escape from “Vent” or “Exhaust” ports and close contact should be avoided.

Caution Ensure ventalation space near the bottom and rear of the controller for heat dissipation.

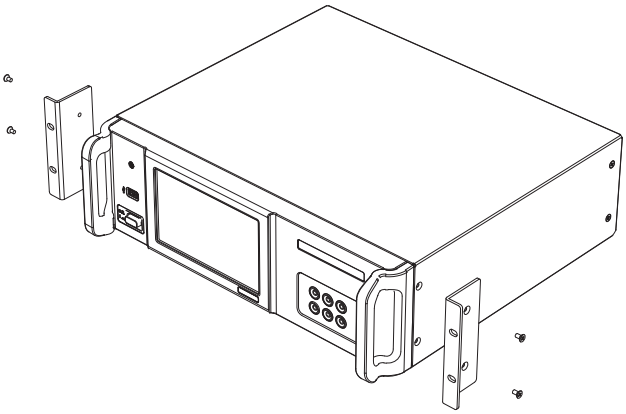

Fig. 3-1 Rack enclosure installation diagram

3.2 Pressure Connection

Warning Appropriate cautions and safety regulations should be observed when using gas supplies.

Caution All pressure output is G1/8 and O-rings shall be used for sealing during connection.

See Fig. 2-3 for ADT780 pressure menu.

◆ **Supply:**

The Supply port is to connect a positive pressure supply to the controller. The supply should meet the following requirements:

원문: Additel ADT780S ADT780S 매뉴얼 · 제조사 원문 자료입니다. 사양은 제조사 사정에 따라 변경될 수 있습니다.

Additel

1) Air or nitrogen must be clean and dry;

2) The air supply source pressure scope shall be 110-120% of the range of the pressure module connected with the controller;

Warning The maximum air source pressure shall be 120%FS of the upper limit of the range of the pressure module connected with the controller. Otherwise, injury or equipment damage may occur.

Caution It is suggested that the positive pressure air source shall be connected to “Supply” after passing through the air-liquid separator.

◆**Vacuum:**

“Vacuum” is the port which provides vacuum source for the controller. If no vacuum source is required, the port should be open to atmosphere.

The controller is embedded with a vacuum switch solenoid valve. When the valve releases pressure from the higher pressure to the lower pressure, gas will be exhausted from “Exhaust”. The controller can control the solenoid valve to choose “Vacuum” only if the vacuum pressure is required.

Warning Positive pressure applied to the vaccum port may result in injury or equipment damage.

◆**Outlet:**

Outlet" is the pressure output /measurement menuport. Under the measurement mode, the outlet can be connected with external pressure (please execute the empty function before connection). Under the control mode, the controller outputs an adjustable pressure at the set point.

Warning The “Outlet” pressure should not exceed the pressure module range. Otherwise, injury or equipment damage may occur.

Caution When the controller is set to measure mode and the external pressure control exceeds 2MPa, the release valve should be tightly screwed in the “Supply” port (As Fig 7-1). If there is a need to remove this release valve, please loosen it firstly to relief the residual gas out.

8

원문: Additel ADT780S ADT780S 매뉴얼 · 제조사 원문 자료입니다. 사양은 제조사 사정에 따라 변경될 수 있습니다.

◆**Reference:**

ADT780 has a built-in barometer which enables gauge and absolute pressures types without connection to the reference port.

◆**Vent:**

The “Vent” port is used for the venting of gas and disposing of any liquid or contaminants (through the Empty function) so close exposure to the port should be avoided.

⚠ Warning When the controller is venting, gas will vent from “Vent” port and close contact should be avoided.

◆**Exhaust**

“Exhaust” is used for exhausting gas. When the output pressure is higher than the barometric pressure, gas will beexhausted from “Exhaust” under the control or exhaust mode. The exhaust speed depends on the “pressure change rate” (see Chapter 5.9 Control Setup) and differential pressure. Gas exhausted at the high speed may make some noise even though a noise reducing muffler is installed.

⚠ Warning Gas may be exhausted from the “Exhaust” during the operation of the controller, close contact to the port should be avoided..

◆**Barometer**

“Barometer” is used for measuring the pressure of the barometric pressure sensor. The “Barometer" is equipped with a filter. The filter should be removed before it is connected to the standard pressure source during calibration.

3.3 Electrical Menus

The Electrical menu is located on the rear panel. See Fig 2-2.

◆ **Power Supply Menu:**

⚠ Warning Operators must be familiar with and abide by electrical operation regulations and relevant safety regulations.

원문: Additel ADT780S ADT780S 매뉴얼 · 제조사 원문 자료입니다. 사양은 제조사 사정에 따라 변경될 수 있습니다.

Additel

Warning Operators must ensure the power supply system connected with the controller has the grounding safety protection.

The controller is equipped with a three prong AC power cord plug, including one safety grounding joint. The operator shall connect the power plug to the three AC power supply socket, ensure proper grounding and confirm that the connected AC power supply meets the requirement of the controller for power supply (90V~250V, 50/60Hz).

◆ **DO menu:**

The terminal V+ and the terminal V- are DC24V active output and the maximum load is 500mA. V+ is DC24V and V- is GND for controlling the solenoid valve of the external filter (gas-liquid separator).

The terminals DO1, DO2 and COM are constant open node outputs of two groups of inactive relays and the node capacity is 1A/DC24V. See Chapter 5.13 DO Configuration for the definition of node functions.

3.4 Communication Menus

Communication menus of the controller are on the rear panel.

◆ **RS232 menu:**

RS232 menu of the controller is the main menu of DB-9 and works under slave mode for communication.

Pins are defined below:

Pin	1	2	3	4	5	6	7	8	9
Function	N.C	TX	RX	N.C	GND	N.C	N.C	N.C	N.C

Table 3-1 Definition of RS232 pins

◆ **LAN menu:**

LAN is a standard RJ45 menu. The controller is allowed to access 10/100Mbps Ethernet to realize the quick communication. Please refer to Chapter 6.1.3 Communication Setup-LAN for the parameter setup of LAN.

원문: Additel ADT780S ADT780S 매뉴얼 · 제조사 원문 자료입니다. 사양은 제조사 사정에 따라 변경될 수 있습니다.

◆ **WIFI menu:**

A WiFi unit is embedded above the USB menu on the front panel of the controller, supports 802.11b\g\n standard and is used for accessing the wireless LAN. During installation, ensure the WiFi menu is not obstructed. See Chapter 6.1.2 Communication Setup-WiFi for the WiFi connection and parameter setup.

◆ **USB A Menu:**

A USB A menu is located on the front panel and rear panel of the controller for connecting U-disk, data input and output, and upgrading firmware. See the relevant chapter for the detailed operation.

3.5 Pressure Module Connection

The pressure connection for the external pressure module (Model ADT160A) is located on the rear panel of the controller. When connected, the controller switches the control mode to the external module to be used as the control sensor. When the external pressure module is disconnected, the control mode switches to the internal pressure sensor for control.

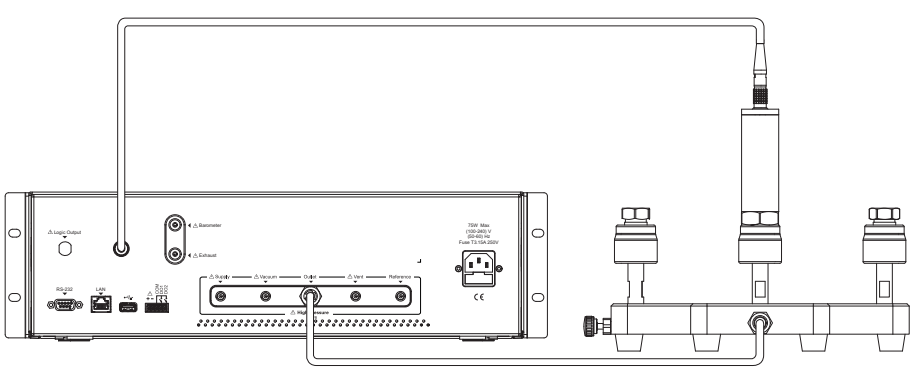

Fig. 3-2 Rear view of the connection of the ADT160A pressure module

원문: Additel ADT780S ADT780S 매뉴얼 · 제조사 원문 자료입니다. 사양은 제조사 사정에 따라 변경될 수 있습니다.

Additel

Warning

When the internal ADT160A pressure module is used, ensure that the electric circuit and the air circuit of the external ADT160A pressure module are disconnected at the same time. Otherwise, the external ADT160A pressure module might be damaged.

3.6 Electric Signal Measurement and Bus Communication Connections

The controller supports current, voltage, switching measurement and Profibus communication functions (e.g. HART, Profibus PA).

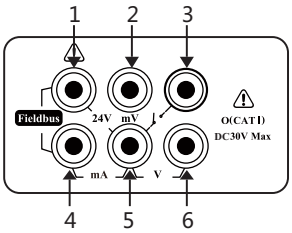

Fig. 3-3 Electric signal measurement terminal diagram

Calibrating terminals	Function Description
1 and 4	Profibus communication and DC24V loop power supply (maximum: 25mA)
1 and 5	DC24V power supply (maximum 25mA)
2 and 5	mV measurement
3 and 5	On-off measurement
4 and 5	Current measurement
6 and 5	Voltage measurement

Table 3-2 Electric signal measurement terminal introduction

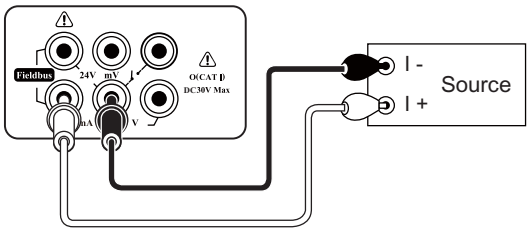

Fig. 3-4 Current measurement

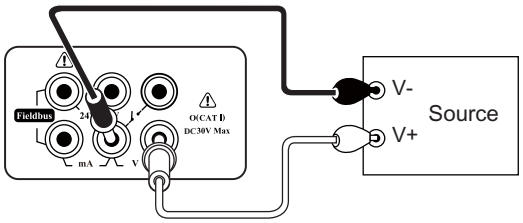

Fig. 3-5 Voltage measurement

원문: Additel ADT780S ADT780S 매뉴얼 · 제조사 원문 자료입니다. 사양은 제조사 사정에 따라 변경될 수 있습니다.

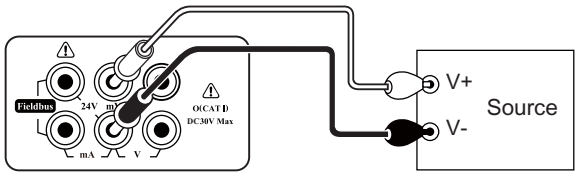

Fig. 3-6 mV voltage measurement

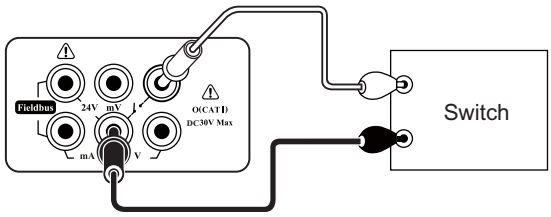

Fig. 3-7 Switch measurement

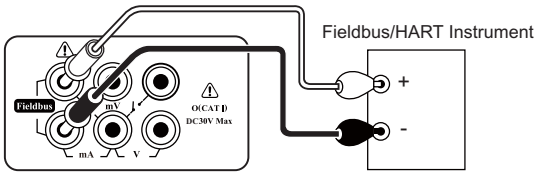

Fig. 3-8 Profibus connection (inner power supply)

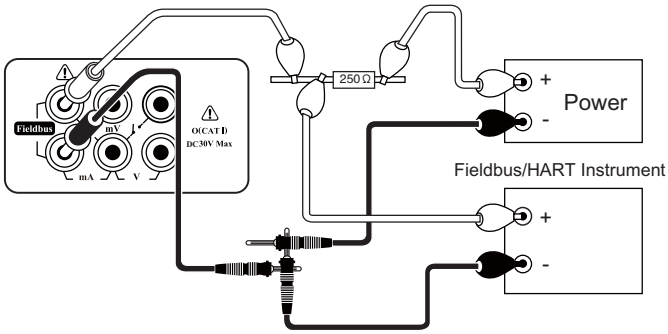

Fig. 3-9 Profibus connection (external power supply)

Profibus /HART® supports connection using internal loop power and external loop power. When the external power supply connection method is adopted, a 250Ω electric resistor shall be connected additionally.

Warning
Ensure the proper CAT rating to be used for voltage or current.
Do not contact any bare metal in the test loop.

원문: Additel ADT780S ADT780S 매뉴얼 · 제조사 원문 자료입니다. 사양은 제조사 사정에 따라 변경될 수 있습니다.

Additel

Warning Signals exerted between terminals shall not exceed the rated value.

Warning The maximum voltage exerted between terminals shall not exceed the peak value of 300V. Otherwise, the damage could occur.

IV. Power-on

Warning Before the controller is switched on, please check if power supply and air circuit are connected according to installation requirements.

4.1 Power-on Sequence

Press the power button on the left side of the front panel. It may take approximately about 60s for the controller to power on. The process is stated below:

1) Enter the booting menu;
2) The controller implements self diagnostics after waiting for a period of time;
3) The system enters the main menu.

4.2 Language Setup

Click the language setup icon on the setup menu and enter the language setup menu. You can switch to English, Chinese, Germany, French, Italian, Spanish, Portuguese, Russia and Japanese menu. The new language setup is effective after rebooting.

4.3 Date and Time Setup

Click the date and time setup icon on the system setup menu and enter the date and time setup menu.

◆ The valid date is from 2000-01-01 to 2099-12-31 and the valid time is from 00: 00: 00 to 23: 59: 59;

원문: Additel ADT780S ADT780S 매뉴얼 · 제조사 원문 자료입니다. 사양은 제조사 사정에 따라 변경될 수 있습니다.

◆ The controller accounts for leap year, leap month, second, minute and hour when it saves the setup.

4.4 Output of Setup Pressure

Caution Before generating pressure check to make sure the connections are properly made to the output port.

Click the main menu pressure setup value /current pressure value to set the target pressure. After checking, the controller will adjust the pressure at the “Outlet” to the target value automatically.

V. Operation

5.1 Pressure Setup

◆ Select the pressure set value/current pressure on the main menu to set the target pressure;

◆ Select the icon or on the menu to increase or decrease the set value by a set step;

◆ The controller will switch to the control mode automatically;

◆ Please input the pressure set value within the range indicated on the input menu.

5.2 Unit Setup

◆ Select the pressure unit or pressure range on the main menu;

◆ The unit selections are associated with the range and display resolution;

◆ Custom units can be programmed;

◆ Select the icon on the right corner of the menu to enter the unit editing and definition menu.

5.3 Measurement

◆ Select the key “measurement” below the main menu to enter the measurement mode;

◆ If measurement mode is selected when the controller is in control mode, the pressure control will stop immediately;

원문: Additel ADT780S ADT780S 매뉴얼 · 제조사 원문 자료입니다. 사양은 제조사 사정에 따라 변경될 수 있습니다.

Additel

◆ Under the measurement mode, the controller measures the pressure at the “Outlet”.

5.4 Control

◆ Select the key “Control” in the menu of the controller to enter the control mode;

◆ After entering the control mode, the controller will adjust the pressure at the “Outlet” to the target value automatically;

◆ When the difference between the output pressure and the set pressure meets the requirement for the “control stability”, the pressure display will turn green.

Caution The supply of vacuum pressure must be greater than the desired set point or the controller will not be able to properly control.

5.5 Empty

◆ Select the key “Empty” below the main menu to enter the fuction that pushes out any liquid or contaminents in the controller;

◆ When the reset gauge pressure is controlled, after the controller achieves the set value of the “empty pressure”, it will enter the empty mode automatically;

◆ After the pressure is vented, the output pressure at the “Outlet” drops to the barometric pressure and disconnect the air supply and vacuum at the same time;

Caution Please refer to Fig. 5-1 for the collection of liquid at the “Vent” if necessary.

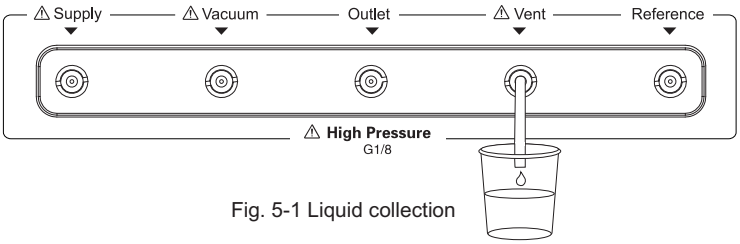

Fig. 5-1 Liquid collection

원문: Additel ADT780S ADT780S 매뉴얼 · 제조사 원문 자료입니다. 사양은 제조사 사정에 따라 변경될 수 있습니다.

5.6 Program Setup

- ◆ Click the icon to increase pressure at a set value or step. When selected, the controller will enter the control mode at once. If the current set value is 2 kPa and the step size is 1 kPa, after clicking the icon, the set value will be 3kPa;
- ◆ Click the icon to reduce the set value. If the current set value is 2 kPa and the step size is 1kPa, after clicking the icon , the set value will be 1 kPa.

5.7 Current/Voltage Measurement

Click the “Calibrator” icon in the function selection to enter the main menu of the calibrator.

1. Switch measurement items: current, voltage and mV measurement.
   - ◆ If the measurement value exceeds the measureable scope of the calibrator, “------” will be displayed and an alarm will be given;
   - ◆ Short the measurement and select the reset icon.
2. Connection: refer to Fig. 3-4, Fig. 3-5 and Fig. 3-6.

5.8 Switch Measurement

Select the “Calibrator” icon to enter the main menu of the calibrator.

1.Switch measurement item: switch test.

2.After the switch is open or closed, the controller will record and display the pressure value of the set or reset.

3.Connection: refer to Fig. 3-7.

5.9 Control Setup

Select the “Control Setup” icon in the menu“System Setup”. menu

1.Pressure control velocity.

원문: Additel ADT780S ADT780S 매뉴얼 · 제조사 원문 자료입니다. 사양은 제조사 사정에 따라 변경될 수 있습니다.

Additel

The pressure velocity value can be adjusted as necessary.

2. Pressure control stability

◆If the difference between the output pressure and the set pressure is within the range, it is deemed that the pressure is stable. When stability is reached, the value will turn green and beep;

◆The pressure control stability is expressed by the relative value of the pressure range.

3. Vent Pressure

After entering the “Vent” mode, the controller will adjust the output pressure toward barometric pressure. When the output pressure is lower than the barometric pressure, the controller vent up to barometric pressure.

4. Pressure Type

◆Two types: gauge pressure and absolute pressure;

◆ADT160A pressure modules are configurable for gauge pressure and absolute pressure. When the ADT160A module is a gauge pressure type, absolute pressure = barometric pressure + gauge pressure;

◆When the ADT160A module is an absolute pressure type, gauge pressure = absolute pressure - barometric pressure.

Caution When absolute pressure type is switched to gauge pressure type, the zero must be implemented.

5. Pressure resolution:

◆Quartz pressure modules have resolution options of 5, 6 or 7, user selectable;

◆Standard pressure modules have resolution of 4, 5 or 6 digits, user selectable.

6. Set Point Range

◆This function is valid only if this parameter is enabled;

◆Input an equal or smaller range according to the range of the controller as the upper and lower limits of pressure control to protect devices under test which have a smaller pressure range than the controller;

◆The setup will be memorized by the controller and still valid after rebooting;

원문: Additel ADT780S ADT780S 매뉴얼 · 제조사 원문 자료입니다. 사양은 제조사 사정에 따라 변경될 수 있습니다.

◆The target value of the control pressure of the controller is limited to this requirement. Beyond the range, the controller will ask you to input the upper and lower limits of the control range again.

7. Pressure Module

◆There are two types of pressure modules: high and low range.

5.10 Pressure Zero

Select the key "Zero" below the main menu or click the “Pressure Reset” icon in the “System Setup” to enter the pressure reset menu.

◆Select pressure zero to zero the pressure reading;

◆Follow the operation instruction on the menu;

◆When zeroing, the vent valve of the controller is open to the atmosphere;

◆The gauge pressure module supports zero under the gauge pressure mode;

◆Under the absolute pressure mode, the gauge pressure module supports zero. At this time, the gauge pressure is reset to atmosphere;

◆Under the gauge pressure mode, the absolute pressure module supports zero. At this time, the difference between the barometric pressure measured by the absolute pressure module and the barometric pressure measured by the barometric pressure is reset;

◆Under the absolute pressure mode, the absolute pressure module does not support zeroing.

Caution When the external ADT160A pressure module is connected, please ensure the module is open to atmosphere to zero.

5.11 Display Setup

Screen luminance setup: 26 grades of screen luminance are optional. The higher the value, the brighter the screen.

5.12 Pressure Head Correction

원문: Additel ADT780S ADT780S 매뉴얼 · 제조사 원문 자료입니다. 사양은 제조사 사정에 따라 변경될 수 있습니다.

Additel

The distance from the middle of the internal ADT160A pressure module in the controller to the bottom is 60mm.

Pressure head correction is necessary when the device under test height is different from the internal ADT160A.

1. Figure out the correction value according to the density, height and gravity acceleration rate:
   - ◆ When an external ADT160A pressure module is selected, please input the height difference between the device under test and the external ADT160A pressure module;
   - ◆ If the device under test is higher than the controller, input a positive height value;
   - ◆ If the device under test is lower than the controller input a negative height value.

2.Set the constant correction value:

- ◆ The actual pressure value at the "Outlet" of the controller =target value + correction value.

5.13 DO Configurationc

- ◆ The controller provides two DO ports, i.e. DO1 and DO2;
- ◆ DO ports can be configured with 7 modes, including: closed, pressure stability, pressure measurement, pressure control, pressure vent, overload pressure and pressure vacuum pump;
- ◆ When DO ports are closed, they always output low level;
- ◆ If DO ports are configured with the other 6 modes, DO ports will output high level when the controller stays at the relevant state. Otherwise, they output low level.

5.14 Hart Communication

Select the "HART" icon menu to enter the Hart application menu.

5.14.1 Polling

1. Connection

   See Fig. 3-8 for the internal loop power supply connection method. See Fig. 3-9 for the external loop power supply

원문: Additel ADT780S ADT780S 매뉴얼 · 제조사 원문 자료입니다. 사양은 제조사 사정에 따라 변경될 수 있습니다.

connection method.

2. Search

- Start polling after selecting internal or external loop power and resistance;
- Search the HART equipment from the address “0”. If the address “0” is searched successfully, the controller will stop searching and display the HART equipment list. Otherwise, the controller will start to search from the address “1” until it reaches “15”. After finishing searching, the controller will make a list of all searched HART equipment and can support.
- In the searching process, you can stop searching by clicking the icon ;
- You can research again by clicking the icon after finishing searching;
- Select one HART device from the list of searched HART items. Click its icon to enter the HART menu.

5.14.2 Process Variable

- Select “Process Variable Selection” menu in the HART menu. Then, you can select the PV (Primary Variable), current output AO, percentage, the 2nd variable, the 3rd variable or the 4th variable;
- At the upper right corner of the main menu of Hart application, the loop current always displays.

5.14.3 Setup

- Select “Setup” at the upper right corner of the main menu of the application to enter the setup menu;
- The equipment information, sensor information and equipment output information can be checked and modified.

5.14.4 Diagnosis

1. Current Loop Test

원문: Additel ADT780S ADT780S 매뉴얼 · 제조사 원문 자료입니다. 사양은 제조사 사정에 따라 변경될 수 있습니다.

Additel

- Enter the test value and press “√” to accept the value. The parameter range is (4-20)mA;
- A warning will be given if the value in tested is not acceptable;
- After the current value is written in successfully, the current measurement value is the actual value of the current loop;
- Press the key “Fetch” to write the current measurement value into the virtual keyboard.

2. Electric Zero
   - Select “√” on the electric zero to zero the value;
   - Be sure that the current measurement value is close to the zero point or the zero may fail.
3. Current Adjustment
   - Adjust the proportion coefficient of the current output loop of the transmitter to keep the AO value of the transmitter the same with the actual output loop current;
   - Provide the adjustment of the zero point (4mA) and the span point (20mA): when entering the adjustment point, the controller will sets the transmitter as zero point or satisfaction point output automatically;
   - The virtual keyboard input loop current measurement value can be used, the input range is (4-20)mA, or write the current measurement value into the virtual keyboard by pressing the key “Fetch”;
   - Press the key “√” to adjust the zero or span point according to the value on the display;
   - In case of adjustment failure, the controller will give a warning.
4. Sensor Adjustment
   - Adjust the PV of the transmitter to keep it the same with the actual output pressure;

원문: Additel ADT780S ADT780S 매뉴얼 · 제조사 원문 자료입니다. 사양은 제조사 사정에 따라 변경될 수 있습니다.

- Provide the low end (lower PV limit) and high end (upper PV limit) adjustment. When entering the adjustment point, the upper or lower limit of the output PV range of the controller is set automatically. You may also select the output icon of the controller and change the output pressure in the pop-up window;
- You can use the virtual keyboard to input the pressure measurement value or press the key “Fetch” to write the current measurement value in the virtual keyboard directly;
- Press the key “√” to adjust the PV value according to the value on the virtual keyboard;
- In case of failure in adjustment, the controller will give a warning.

5.15 PROFIBUS PA Communication

Select the “Profibus PA” icon on the application menu to enter the Profibus PA menu.

5.15.1 Function Description

The controller can calibrate the PROFIBUS PA transmitter and set relevant basic parameters. It is helpful to understand PROFIBUS PA terminology before performing a calibration on the device.

Note: The controller is used to provide pressure and communicate to the PROFIBUS PA transmitter. Therefore, in order to avoid the damage to the control system of the process, the PROFIBUS PA transmitter should be separated from the process before the controller is connected with the Profibus PA transmitter.

5.15.2 Equipment Description Document

The equipment description document is used for describing equipment parameters and parameter visiting method. By means of parameter description, the user can operate all parameters of the PROFIBUS PA. The controller adopts the special equipment description document and realizes the visit some parameters in Physical Block, transducer Block and Function Block of the transmitter. The controller covers common transmitter description documents. If you need more, please contact us.

원문: Additel ADT780S ADT780S 매뉴얼 · 제조사 원문 자료입니다. 사양은 제조사 사정에 따라 변경될 수 있습니다.

Additel

5.15.3 Connection and Search

- Please refer to Fig. 3-8 for the detailed connection method;
- You can start and stop searching by selecting the icon ;
- Select the PA equipment to be connected in the searched PA equipment list. Enter the main menu of Profibus PA after successful connection.

5.15.4 Process Variables

Process variables are displayed on the main menu of Profibus PA. After selecting the key “Process Variable Selection”, you can display and switch among PRIMARY_VALUE, SENSOR_VALUE, SECONDARY_VALUE_1, TRIMMED_VALUE, SECONDARY_VALUE_2 and STATIC_PRESS_VALUE.

5.15.5 Transmitter Operation

1. Setup
   - Select “Setup” at the upper right corner on the main menu to enter the setup menu.
   - Visit and set relevant parameters on this menu, e.g. Physical Block, Transducer Block and Function Block. Before some parameters are changed, relevant TARGET_MODE (OOS, Auto, Man, etc.) may also be changed. Please change relevant parameters according to instructions in the transmitter manual.
2. Transmitter Trim
   - Select the key “Trim” to enter the PA transmitter trimming menu.
   - The transmitter can be trimmed in this menu. Before the transmitter trimming operation, please refer to relevant instructions in the trim section of the transmitter manual.

원문: Additel ADT780S ADT780S 매뉴얼 · 제조사 원문 자료입니다. 사양은 제조사 사정에 따라 변경될 수 있습니다.

5.16 Leak Test

Select the icon “Leak Test” in the “Application” menu to enter the leak test application menu.

5.16.1 Setup

- Select “Setup” at the upper right corner on the main menu of the application to enter the setup menu;
- Set the pressure type, compression method, pressure unit, pressure setting, dwell time and test time;
- Dwell time: it is valid when the internal compression is selected. After the control output pressure of the controller achieves the pressure setting and becomes stable, it switches to the measurement mode. At that time, the dwell time counts down. After the dwell time achieves 0, the official test starts.

5.16.2 Execution

- Select the “Start” key for testing;
- The current leakage and leak rate is calculated in real time during the testing process;
- The curve on the right of the application menu reflects the real-time pressure value of the dwell time and test time and it is possible to drag, amplify and contract the curve, etc.

5.17 Switch Test

Enter the switch test menu by selecting the icon “Switch Test” on the “Application” menu.

5.17.1 Setup

- Select “Setup” at the upper right corner on the main menu of the application to enter the setup menu;
- Set the pressure type, pressure unit, calibration scope, dead zone scope, setting point,permitted error and action type;

원문: Additel ADT780S ADT780S 매뉴얼 · 제조사 원문 자료입니다. 사양은 제조사 사정에 따라 변경될 수 있습니다.

Additel

5.17.2 Execution

- Select the “Test” key for testing;
- In the test process, you can select “Suspend” to suspend the test and select “Continue” to continue the test;
- After finishing the first test, select the “Test” key again for another test; Select the key “Finish” to end the test;
- The application program records the last three test points;
- After the test is over, you can check the process and result data.

5.18 Automatic Stepping

Select the icon “Automatic Stepping” on the “Application” menu to enter the automatic stepping application menu.

5.18.1 Setting

- Select the key “Setting” at the upper right corner on the application menu to enter the setting menu;
- Set the initial value, stop value, step length /stepping point, dwell time, operation mode, up and down and stepping mode;
- The initial value and stop value of the step are not the same (initial value < end value: first up and then down; initial value > end value, first down and then up);
- When the step length is not divisable by the whole section, the asymmetric method shall be adopted for generating steps.

5.18.2 Execution

- Select the “start” key to start the step output;
- Manual operation: select “next point” to output each step sequentially. Select “last point” to go back to the last step.

원문: Additel ADT780S ADT780S 매뉴얼 · 제조사 원문 자료입니다. 사양은 제조사 사정에 따라 변경될 수 있습니다.

Select the key “Stop” for ending;

- Automatic operation: The controller will output each step automatically and sequentially according to the setting steps. You can select the “Suspend” key to suspend the output, select “Continue” to continue the output and select “Stop” to end the test.

5.19 Decompressor

Select the “decompressor” icon on the “Application” menu to enter the decompressor application menu.

5.19.1 Setup

- Select “Setup” at the upper right corner on the main menu of the application to enter the setup menu;
- Set the permissible tolerance, range and inspection points;
- The number of inspection points is 3-8.

5.19.2 Execution

- Select “Start” to start the test ;
- Leak test:
  1) The application program will perform the leak test for 60s;
  2) The pressure at the set point of the leak test is the maximum testing point pressure of the high pressure meter;
  3) If you do not want to perform the leak test, select “Next” to skip it.
- Calibration of high pressure gauge:
  1) Select “Next” in manual operation to output the pressure at each testing point sequentially;
  2) After the pressure is stabilized, select to input the high pressure indication at the current test point.
- Calibrate the low pressure gauge: see the step for the calibration of the high pressure gauge;

원문: Additel ADT780S ADT780S 매뉴얼 · 제조사 원문 자료입니다. 사양은 제조사 사정에 따라 변경될 수 있습니다.

- Select “Finish” to check the testing result;
- Select “End” to quit the test;

VI. Remote Communication

6.1 Communication setting

Select the “Network Setting” icon at the “System Setting” menu, and enter the communication setting menu.

6.1.1 Communication Setting -RS232

Select “Serial Port” icon at the communication setting menu and enter RS232 setting menu. WIFI will be unavailable in the case of RS232 communication.

- Baud Rate and Stop Bit can be set;
- The data bit is fixed as 8 digits.

6.1.2 Communication setting –WIFI

Select “WLAN Setting” at the communication setting menu and enter WIFI setting menu. WIFI will be unavailable in the case of RS232 communication.

- In the case of using WIFI for the first time, you need to enter the “Advanced Options” menu to setup this function. In the case of static IP, you should set the IP address, gateway and subnet mask; in the case of dynamic IP, you need only to directly check “DHCP”;
- Check “WLAN”, you will open WIFI and start searching hotspots;
- Select “Wireless Hotspots”, and you may check all found hotspots and switch the hotspots;
- When connection is establishe this icon will appear at the top of the main menu.

6.1.3 Communication setting – LAN

원문: Additel ADT780S ADT780S 매뉴얼 · 제조사 원문 자료입니다. 사양은 제조사 사정에 따라 변경될 수 있습니다.

Select “Ethernet Setting” at the communication setting menu and enter LAN setting menu. In the case of static IP, you shall set IP address, gateway and subnet mask; in the case of dynamic IP, you need only to directly check “DHCP”;

6.2 Communication commands

The controller follows SCPI (see the List of 9.3 SCPI).

VII. Maintenance

This Section stipulates system information, firmware updates, calibration, and routine cleaning and maintenance.

7.1 System and Product Information

- Select “System information” To view air pressure, vacuum pressure, build-in module pressure, external expanded module pressure, atmospheric pressure and other information;
- Select “Product Information” in the “System Setting” menu to check information on host, controller, electrical logging, bus module, etc.

7.2 Firmware upgrading

- The main program, controller firmware, measurement gauge firmware and bus firmware may be updated;
- The upgrade package must be put under the root directory of USB flash driver;
- The format of U disk is FAT16 or FAT32;
- After inserting U disk, select the icon “Service” at the “System Setting” menu and enter the password, “123456”to enter into the service menu. Select “Upgrade by U Disk” to upgrade;
- Reboot the system after upgrading.

7.3 Calibration

- Calibrate the current/voltage measurement, build-in pressure module and external pressure module of the controller regularly (i.e. by a recommended interval of 365 days) using the password, “123456”;

원문: Additel ADT780S ADT780S 매뉴얼 · 제조사 원문 자료입니다. 사양은 제조사 사정에 따라 변경될 수 있습니다.

Additel

- ◆ Provide factory calibration data function, and recover the calibration data to the factory status;
- ◆ Calibrate standard equipment of higher accuracy;
- ◆ After the last point of calibration, select “OK” and “Save”, and the new calibration data will become effective and used, while the previous calibration data will be deleted permanently.

Caution Please carefully operate the calibration functions of the controller, for inaccurate calibration may affect the accuracy or sevicability of the controller.

7.3.1 Internal pressure module and external pressure module calibration

1.Set calibration points:

- In the case of positive and negative pressure multi-range, a three-point calibration shall be conducted with the calibration point by default as the lower limit of the range, zero point and the upper limit of the range;
- In the case of negative pressure multi-range, a two-point calibration shall be conducted with the calibration point by default as the lower limit of the range and zero point;
- In the case of positive pressure multi-range, a two-point calibration shall be conducted with the calibration point by default as zero point and the upper limit of the range;
- All calibration points can be revised;
- The negative pressure calibration point shall meet the current ambient atmospheric pressure;
- Pressure generation can be performed through the controller or by an external device;
- Never impose pressure on the controller beyond the range.

2.Implementation standards:

- For calibration of the external pressure module, connect to the external module to the controller so the value is

원문: Additel ADT780S ADT780S 매뉴얼 · 제조사 원문 자료입니다. 사양은 제조사 사정에 따라 변경될 수 있습니다.

displayed;

- Pressure Generation:

1) Internal pressurization: means the pressure automatically driven to calibration points using the ADT780 controller;
2) External pressurization: Refer to the Outlet connection instructions of Section “3.3 Pressure Connection”. You may use external standard pressure source to calibrate the controller sensor. During the calibration process, the external pressure source provides standard pressure to all calibration points. The controller is measuring without control. The controller automatically records the measurement values under standard pressure of all calibration points to complete calibration.

- Internal pressurization:

1) Connect the digital standard to the “Outlet”; when calibrating external pressure module, connect the external pressure module to “Outlet”;
2) Press “Start” to start the calibration;
3) By the prompt of the controller, the controller automatically enters the current pressure value of the calibration points to the standard pressure gauge, enter the readings to the controller after both the pressure output and standard readings become stable, and press “Next” to calibrate next calibration point;
4) After all calibration points are calibrated, press “Next” and you will be prompted to save the standard data or not.

- External pressurization:

원문: Additel ADT780S ADT780S 매뉴얼 · 제조사 원문 자료입니다. 사양은 제조사 사정에 따라 변경될 수 있습니다.

Additel

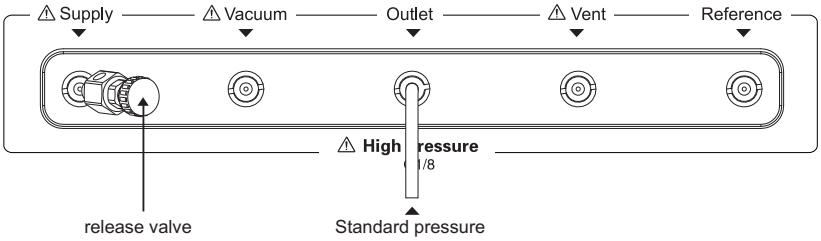

Fig 7-1 Connection of External Standard Pressure

1) When calibrating the internal pressure module, as shown by Fig-7-1, the standard pressure shall be connected to “Outlet”, and a release valve shall be tightly screwed to “Supply”. when calibrating the external pressure module, the standard pressure can be connected only to the external pressure module.
2) Press “Start” to calibrate;
3) By the prompt of the controller, the standard pressure source enters standard pressure of the current calibration points to the controller. When the standard gauge readings and measurement value become stable, press “Next” to calibrate next calibration point;
4) After all calibration points are calibrated, press “Next” and you will be prompted to save the standard data or not.
5) Before remove the release valve, please loose it firstly to exhaust the residual gas.

- At any time before the completion of calibration, you may press “Next” and return to the previous operation until exiting the entire calibration function, where the calibration will not go to effect; if the calibration succeeds, the current system date will be recorded as calibration date.

원문: Additel ADT780S ADT780S 매뉴얼 · 제조사 원문 자료입니다. 사양은 제조사 사정에 따라 변경될 수 있습니다.

7.3.2 Atmospheric pressure module and vacuum module calibration

ADT780 supports atmospheric pressure module and vacuum module calibration.

1.Set calibration points:

- The compound module requires a three-point calibration with the standard points by default as the lower limit of the range, zero point and the upper limit of the range, of which the calibration pressure of the upper limit of range shall be ≤600kPa;
- The atmospheric module requires two-point calibration with the standard points by default as lower zero point and the upper limit of range, of which the calibration pressure of the upper limit of ADT780-7MPa shall be ≤10MPa, and the calibration pressure of the upper limit of ADT780-21MPa ≤25MPa;
- All the calibration points can be revised;
- The negative standard points shall meet the current ambient atmospheric pressure.

2.Implementation standards:

- In the case of atmospheric pressure module calibration, the standard pressure shall be connected to “Supply”, and in the case of vacuum module calibration, the standard pressure shall be connected to the “Vacuum”;
- Press “Start” to calibrate;
- By the prompt of the controller, the standard pressure source enters standard pressure of the current calibration points to the controller. When the standard gauge readings and measurement value become stable, press “Next” to calibrate next calibration point;
- After all calibration points are calibrated, press “Next” and you will be prompted to save the standard data or not; before the completion of calibration, press “Previous” to return to the previous operation until exiting the entire

원문: Additel ADT780S ADT780S 매뉴얼 · 제조사 원문 자료입니다. 사양은 제조사 사정에 따라 변경될 수 있습니다.

Additel

calibration function, where the calibration will not go to effect; if the calibration succeeds, the current system date will be recorded as calibration date.

7.3.3. Electrical signals measurement standards

1.Set standard points

- Treat the calibration points by default as -30mA, 0mA, 30mA, -300mV, 0mV, 300mV or -30V, 0V, 30V;
- The calibration points can be changed if necessary.

2.Implementation standards

- Press “Start” to calibrate;
- By the prompt of the controller, the standard current/voltage source enters standard current/voltage of the current calibration points to the controller. When the measurement value becomes stable, press “Next” to calibrate next calibration point;
- After all calibration points are calibrated, press “Next” and you will be prompted to save the data or not.
- At any time before the completion of calibration, you may press “Next” and return to the previous operation until exiting the entire calibration function, where the calibration will not go to effect.
- If the calibration succeeds, the current system date will be recorded as calibration date.

7.3.4 Atmospheric pressure module calibration

The range of barometric pressure module is (60~110)KPa, accuracuy is 40Pa (11Pa is optional).

- Standard pressure connection to “Barometer”;
- Two-point calibration;
- Operate by the prompt of the controller.

원문: Additel ADT780S ADT780S 매뉴얼 · 제조사 원문 자료입니다. 사양은 제조사 사정에 따라 변경될 수 있습니다.

7.3.5 Self-tuning

Select “Self-tuning” at the calibration menu and enter the self-tuning menu.

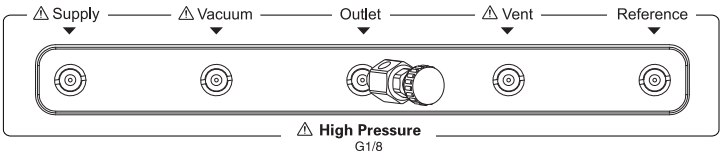

Figure 7-2 Self-tuning Connection

- Before self-tuning, screw gas release fitting in Outlet port. During calibration, as Fig 7-2, srew gas release fitting tightly;
- Disconnect external module;
- Remove the external leakage with the pressure dropping rate <0.1kPa/s under ADT780-7MPa measurement and < 1kPa/s under ADT780-21MPa;
- Connect to the external air source with the recommended air source pressure as 110% range upper limit, and pressure source pressure shall not be less than 40% of the range upper limit;
- Implement the calibration by the prompts.

7.4 Uninstallation

In the case of installation displacement or packaging for transportation, the controller shall be operated by the following:

1) Release all pressure of the controller, and ensure no positive pressure and vacuum pressure in the controller;

2) Cut off the power connection (including positive pressure and vacuum);

원문: Additel ADT780S ADT780S 매뉴얼 · 제조사 원문 자료입니다. 사양은 제조사 사정에 따라 변경될 수 있습니다.

Additel

3) Turn off the power and then disconnect the power line;

4) Disconnect RS232 communication line, cyber line, DO connection line and electric signal test line;

5) Disconnect all pipes;

6) Remove the rack installation bolts for rack installation.

7.5 Changeable parts

Name / Order No.	Specifications and model
Fuse	T3.15A/250V
Filter (1220211087)	50um

Table 7-1 Changeable Parts

7.6 Fuse replacement

Refer to Table 7-1 for the specifications of fuse adopted by the controller. Fuse change steps:

1.Press power switch, turn off the power, and disconnect the power line;

Warning Even the power is disconnected, the leads of the power input filter may also store dangerous voltage for internal capacity.

2.Remove the fuse box from the power input filter with ascrewdriver, and put in new fuse as shown by Figure 7-3;

3.Restore the fuse box of new fuse to the power input filter;

4.Reconnect the power line, press the power switch and operate the controller;

5.Please contact Additel or the authorized agent, if the fuse blows immediately after power connection.

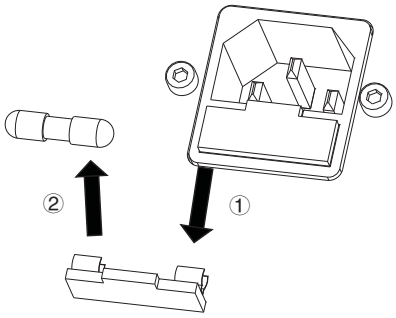

Figure 7-3 Diagram of Fuse Replacement

원문: Additel ADT780S ADT780S 매뉴얼 · 제조사 원문 자료입니다. 사양은 제조사 사정에 따라 변경될 수 있습니다.

7.7 Filter replacement

If the gas circuit of the controller has two kinds of filters with models and order numbers shown by Table 7-1. If necessary (such as due to jamming, erosion and rusting), please change the filter according to the following steps:

1.Release all internal pressure and disconnect the external air source;

2.Disconnect power of the controller;

3.Disconnect the external pipe connection;

4.Adopt special tools to remove the internal filters within all pressure interfaces, and put in new filters;

5.Restore the connection of air circuit and electric circuit.

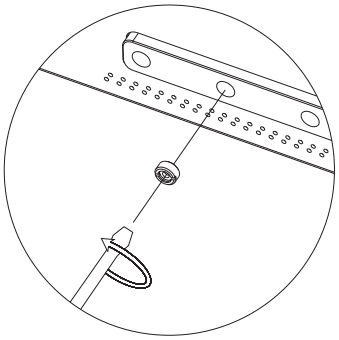

Figure 7-4 Diagram of Filter Replacement

원문: Additel ADT780S ADT780S 매뉴얼 · 제조사 원문 자료입니다. 사양은 제조사 사정에 따라 변경될 수 있습니다.

Additel

VIII. Troubleshooting

Warning If the failure cannot be fixed, please stop system operation immediately and contact the manufacturer or authorized agent. To uninstall the system, please refer to Section 7.7 “Uninstall the System”.

Problem	Cause/Solution
Blank display when plugged in and power switch to ON	1. No power supplied or fuse blown; 2. Check the power and change the fuse (Refer to 7.7 “Change Fuse”).
Current/voltage measurement readings turn red or display “…”	1. Signal beyond the range; 2. Bring the signal in line with requirements.
No or sporadic DC24V output	1. PPTC response due to overload; 2. Technical specifications access load.
The current voltage readings turn red	1. Pressure beyond the range; 2. Vent or lower input pressure.
Unable to reach the set voltage value	1. Low positive pressure or vacuum air pressure; 2. Leakage; remove the leaks; 3. Conduct self-tuning.
Too much instability to reach the set pressure value	1. Leakage; remove the leaks; 2. In micro-differential pressure application, “Reference” port is not connected or well-sealed; 3. Conduct self-tuning.
Large air consumption	1. Air circuit leakage; remove the leak.

원문: Additel ADT780S ADT780S 매뉴얼 · 제조사 원문 자료입니다. 사양은 제조사 사정에 따라 변경될 수 있습니다.

Problem	Cause/Solution
In measurement mode, “Outlet”continues to go up or down	1. Going up; the inlet pressure value is leaking; 2. Going down; the outlet pressure value is leaking.
Electric signals unable to be reset	1. The input signal is not zeroed; short the input and then reset .
Pressure measurement unable to reset	1. “Exhaust” or “Vent” port is jammed; 2. Pressure module may need repair or recalibration.
System prompt: The pressure module is not properly connected	1. Cut off the power for 10sec and then power again.
System prompt: Please adjust the air pressure, too high for the present, to a proper range	1. Lower the positive air source to the required range (refer to 3.2 “Pressure Connection”).
System prompt: Please adjust the air pressure, too low for the present, to a proper range	1. Increase the air source to the required scope (refer to 3.2 “Pressure Connection”).
System prompt: The external module has not been connected to the outlet	1. Connect the module to the pressure outlet.
System prompt: Over output pressure	1. Abnormal pressure control – lower or remove the pressure; 2. The pressure imposed on the Outlet is beyond the range: lower externally imposed pressure; 3. Check pressure module.

Table 8-1 Common Failures and Handling Methods

원문: Additel ADT780S ADT780S 매뉴얼 · 제조사 원문 자료입니다. 사양은 제조사 사정에 따라 변경될 수 있습니다.

Additel

IX. Appendix

9.1 Transportation and storage

9.1.2 Packaging

Follow the packaging requirements before shipment to protect the controller against shock, moisture and water.

9.1.3 Transportation

Ensure safe handling with the controller shipment and mark all packages as “fragile”.

9.1.4 Storage

The controller shall be kept according to the following requirements:

1) Storage temperature: (-20~70)℃;

2) Storage moisture: <90%;

3) Put it at clean and cool places, and avoid direct exposure to the sun;

4) No vibration.

9.2 Pressure unit list

S/N	Unit	Unit name supported by SCPI	Unit number supported by SCPI
1	Pa	Pa	0
2	kPa	kPa	1
3	hPa	hPa	12
4	MPa	MPa	2
5	mbar	mbar	5
6	bar	bar	4

S/N	Unit	Unit name supported by SCPI	Unit number supported by SCPI
7	psi	psi	3
8	mmHg@0℃	Hg	7
9	cmHg@0℃	cmHg	102
10	mHg@0℃	mHg	103
11	inHg@0℃	inHg	6
12	mmH_2O@4℃	H_2O	9

원문: Additel ADT780S ADT780S 매뉴얼 · 제조사 원문 자료입니다. 사양은 제조사 사정에 따라 변경될 수 있습니다.

S/N	Unit	Unit name supported by SCPI	Unit number supported by SCPI
13	$inH_2O@4℃$	inH_2O	8
14	$mH_2O@4℃$	$mH_2O@4C$	105
15	$mmH_2O@20℃$	$mmH_2O@20C$	106
16	$cmH_2O@20℃$	$cmH_2O@20C$	107
17	$mH_2O@20℃$	$mH_2O@20C$	108
18	kgf/m^2	kgf/m^2	101
19	kgf/cm^2	KGF	10
20	mtorr	mtorr	109
21	torr	torr	110

S/N	Unit	Unit name supported by SCPI	Unit number supported by SCPI
22	atm	atm	111
23	lb/ft2	lb/ft2	112
24	tsi	tsi	113
25	User1		-1
26	User2		-2
27	User3		-3
28	User4		-4
29	User5		-5
30	User6		-6

Table 9-1 Pressure unit list

9.3 SCPI List

Note: In this System, the pressure unit is always a separate parameter. The current/pressure unit can be a parameter together with its value.

S/N	Command	Description	Parameter	Return value
1	*CLS	The command removes the following register: Standard event register; Query event register; Operational event register; Status byte register; Error queue.	–	–

원문: Additel ADT780S ADT780S 매뉴얼 · 제조사 원문 자료입니다. 사양은 제조사 사정에 따라 변경될 수 있습니다.

Additel

S/N	Command	Description	Parameter	Return value
2	*ESE <enable value>	Set the value of standard event enable register	〈NRf>,0-255	–
3	*ESE?	Read the value of standard event enable register	–	〈Nr1>
4	*ESR?	Read the value of standard event register. On execution of the order, the value of standard event register will be reset.	–	<Nr1>
5	*IDN?	In inquiring the apparatus marking, the return data shall be divided into 2 parts: a.Product series No; b.Software version No.	–	Product series No. and software Ver. No.
6	*OPC	After the equipment implements *OPC command, set the “operation complete” of standard event register at 1.	–	–
7	*OPC?	After *OPC? Order, return to 1.	–	1
8	*RST	Reset main program	–	–
9	*SRE <enable value>	Set the value of status byte enable register	<NRf>,0-255	–
10	*SRE?	Read the value of status byte enable register	–	<Nr1>
11	*STB?	Read the value of status byte register	–	<Nr1>
12	*WAI	Wait for completion of operation.	–	–

원문: Additel ADT780S ADT780S 매뉴얼 · 제조사 원문 자료입니다. 사양은 제조사 사정에 따라 변경될 수 있습니다.

S/N	Command	Description	Parameter	Return value
13	MEASure[:SCALar][:PRESsure<n>]?	Pressure measurement. n valuing 1~6. PRESsure1 means reading the pressure of pressure module under control (the value adjusted by air column under the currently set pressure type); PRESsure2 means reading the pressure of internal module (as original value); PRESsure3 means reading the pressure of external module (as original value); PRESsure4 means reading the pressure of positive pressure module (as original value); PRESsure5 means reading the pressure of negative pressure module (as original value); PRESsure6 means reading atmospheric pressure	–	Measurement value: name of unit
14	MEASure[:SCALar]:CURRent[:DC]?	Current measurement. On receiving the command, the controller sets the measurement item as mA measurement, conduct measurement, and return to the measurement value. The current measurement has only one range (-30~30) mA, displaying the fixed bit width of 6.	–	Measurement value

원문: Additel ADT780S ADT780S 매뉴얼 · 제조사 원문 자료입니다. 사양은 제조사 사정에 따라 변경될 수 있습니다.

Additel

S/N	Command	Description	Parameter	Return value
15	MEASure[:SCALar]:VOLTage[:DC]? [<range>|MINimum|MAXimum]	Voltage measurement. On receiving the command, the controller may switch the range according to the parameters, conduct measurement, and return to the measurement value. The voltage measurement has two optional ranges, displaying the fixed bit width of 6.	Measurement range: <numeric_value> with unit or not. The unit is V by default, if no unit exists. If the value is (-0.3~0.3) V, choose the measurement range of (-300~300)mV with other values falling in (-30~30) V. MIN means the minimum measurement range of (-300~300) mV, and MAX the maximum range of (-30~30)V. If ignoring the parameters, we will choose the measurement range of (-30~30)V.	Measurement value
16	MEASure[:SCALar]:SWITch[:CONNect]?	Switch on-off status checking. On receiving the order, the controller will set the measurement item as switch measurement, conduct measurement, and return to the measurement value.	–	1: On 0: Off
17	SENSe[:PRESsure]:MODE ABSolute|GAUGe	Set pressure type.	ABSolute GAUGe	–
18	SENSe[:PRESsure]:MODE?	Read pressure type.	–	Pressure type

원문: Additel ADT780S ADT780S 매뉴얼 · 제조사 원문 자료입니다. 사양은 제조사 사정에 따라 변경될 수 있습니다.

S/N	Command	Description	Parameter	Return value
19	SENSe[:PRESsure]:DIGit4|5|6|7|MINimum|MAXimum	Set pressure display bit width. 7-bit width is displayed only by connecting to quartz sensor.	Bit width: MIN shows the currently supported minimum bit width; MAX shows the currently supported maximum bit width.	–
20	SENSe[:PRESsure]:DIGit? [MINimum|MAXimum]	Read pressure display bit width.	MINimum shows the currently supported minimum bit width; MAXimum shows the currently supported maximum bit width; Ignore the parameters and return to the currently set bid width.	Bid width
21	SENSe[:PRESsure]:RANGe [:UPPer]?	Read the upper limit of measurement range of the currently controlled module	–	Upper limit of measurement range; name of unit
22	SENSe[:PRESsure]:RANGe :LOWer?	Read the lower limit of measurement range of the currently controlled module	–	Lower limit of measurement range; name of unit
23	[SOURce:]PRESsure <pressure_value>	Set targeted pressure value and output pressure.	Pressure value: <numeric_ value> with the unit currently set by the system.	–
24	[SOURce:]PRESsure?	Read targeted pressure value.	–	Targeted pressure

원문: Additel ADT780S ADT780S 매뉴얼 · 제조사 원문 자료입니다. 사양은 제조사 사정에 따라 변경될 수 있습니다.

Additel

S/N	Command	Description	Parameter	Return value
				value; name of unit
25	[SOURce:]PRESsure: SLEW <value>	Set pressure control rate.	Pressure control rate: <numeric_value> with the unit currently set by the system.	–
26	[SOURce:]PRESsure: SLEW? [LOWer|UPPer]	Read pressure control rate.	LOWer: Read the lower limit of the pressure control rate UPPer: Read the upper limit of the pressure control rate	Pressure control rate; name of unit
27	[SOURce:]PRESsure: TOLerance <value>	Set pressure stability	Pressure stability <numeric_value>, %FS	–
28	[SOURce:]PRESsure: TOLerance?	Read pressure stability	–	Pressure stability
29	OUTPut[:PRESsure]:MODE CONTrol|MEASure|VENT	Set working mode of pressure module	CONTrol represents control mode;MEASure represents measurement mode; VENT represents venting mode.	–
30	OUTPut[:PRESsure]: MODE?	Read working mode of pressure module	–	Working mode of pressure module
31	OUTPut[:PRESsure]: STABle?	Read pressure stability status	–	1: Stable; 0: unstable
32	CALCulate[:PRESsure] :LIMit:LOWer <low>	Set the lower limit of pressure	Lower limit of pressure with the unit currently set by the system	–

원문: Additel ADT780S ADT780S 매뉴얼 · 제조사 원문 자료입니다. 사양은 제조사 사정에 따라 변경될 수 있습니다.

S/N	Command	Description	Parameter	Return value
33	CALCulate[:PRESsure]:LIMit:LOWer?	Read the lower limit of pressure	–	Lower limit of pressure; name of unit
34	CALCulate[:PRESsure]:LIMit:UPPer <high>	Set the upper limit of pressure	Upper limit of pressure with the unit currently set by the system	–
35	CALCulate[:PRESsure]:LIMit:UPPer?	Read the upper limit of pressure	–	Lower limit of pressure; name of unit
36	CALCulate[:PRESsure]:LIMit:STATe <Boolean>|ON|OFF	Set whether the output range limit is enabled.	1,ON: Enabled 0,OFF: Prohibited	–
37	CALCulate[:PRESsure]:LIMit:STATe?	Inquire whether the output range limit is enabled.	–	1: Enabled 0: Prohibited
38	CALCulate[:PRESsure]:LIMit:VENT <value>	Set venting pressure	Venting pressure <numeric_value> with the unit currently set by the system	–
39	CALCulate[:PRESsure]:LIMit:VENT?	Read venting pressure	–	Venting pressure; name of unit
40	SYSTem:VERSion?	Return to the SCPI Ver. No. followed by the system.	–	Ver. No.
41	SYSTem:ERRor[:NEXT]?	Check next error item in the error queue, and delete the item from the queue. The	–	Error information

원문: Additel ADT780S ADT780S 매뉴얼 · 제조사 원문 자료입니다. 사양은 제조사 사정에 따라 변경될 수 있습니다.

Additel

S/N	Command	Description	Parameter	Return value
		error queue can store 50 pieces of error information. The last piece will be replaced by -350“Queue overflow” in the case of over 50 pieces.System power off or *CLS order can remove error queue.		
42	UNIT[:PRESsure] <unit_name>|<unit_ID>	Set pressure unit	Unit: It may be unit name as quoted character string or unit ID as numbers.	–
43	UNIT[:PRESsure]?	Read pressure unit	–	Name of unit
44	STATus:OPERation: ENABle<enable value>	Set operation status enable register	Enable value: <numeric_value>,0-65535	–
45	STATus:OPERation: ENABle?	Read operation status enable register	–	<enable value>:NR1
46	STATus:OPERation[: EVENt]?	Read the value of operation status register. On execution of the command, the value of operation status register shall be reset.	–	<value>:NR1
47	STATus:QUEStionable :ENABle <enable value>	Set problem data enable register	Enabling value: <numeric_value>,0-65535	–
48	STATus:QUEStionable :ENABle?	Read problem data enable register	–	<enable value>:NR1
49	STATus:QUEStionable [:EVENt]?	Read the value of problem data incident register	–	<value>:NR1

48

원문: Additel ADT780S ADT780S 매뉴얼 · 제조사 원문 자료입니다. 사양은 제조사 사정에 따라 변경될 수 있습니다.

S/N	Command	Description	Parameter	Return value
50	STATus:PRESet	Remove the value operation status enable register and problem data enable register	–	–

Table 9-1 SCPI Summary

원문: Additel ADT780S ADT780S 매뉴얼 · 제조사 원문 자료입니다. 사양은 제조사 사정에 따라 변경될 수 있습니다.

Additel Corporation
22865 Savi Ranch Parkway Ste F
Yorba Linda, CA 92887, USA
Phone: 714-998-6899
Email: service@additel.com
website: www.additel.com

원문: Additel ADT780S ADT780S 매뉴얼 · 제조사 원문 자료입니다. 사양은 제조사 사정에 따라 변경될 수 있습니다.

Overview

ADT780–1K–EPUMP air pressure source uses electric driven pumps to generate positive pressure and vacuum pressure. It can generate –13.5 psi (–0.095MPa, –0.95 bar) vacuum and 1,080 psi (7.5MPa, 75 bar) pressure. With two independent control and pressure generation systems, vacuum and pressure can run simultaneously. This system supplies a steady and reliable air source for Additel 780 pressure controller.

Specification

- **Pressure range:**
  Vacuum: –0.095MPa to 0MPa, @ the local atmosphere is 0.1MPa. Pressure is displayed in absolute pressure. The conversion between absolute pressure and vacuum is: Vacuum value = local atmosphere value – set absolute pressure value.
  Pressure: 0MPa ~ 7MPa (pressure is displayed in gauge pressure).
- **Vacuum pressure limit:** User–selectable low and high set point limits. Vacuum will be generated until the vacuum pressure is in between the low and high set point values and then remain in a standby state.
- **Positive pressure limit:** User–selectable low and high set point limits. Pressure will be generated until the pressure is in between the low and high set point values and then remain in a standby state.
- **Media:** Air
- **Suction flow:** 9L/min
- **Power supply:** W 100 to 250V 50/60 Hz
- **Dimensions:** 21.7” X 17.3” X 9.3” **LWH** (550 X 440 X 235 mm)
- **Weight:** 69.7 lbs (31.6 kg)
- **Outlet port:** G1/8F
- **Storage temperature:** –20° C to 70° C
- **Additel has made a concerted effort to provide complete and current information for the proper use of the equipment. The product specification and other information contained this manual are subject to change without notice.**

Additel 780-1K-EPUMP Electric Pump User Manual

[Version No.: 1510V01]

원문: Additel ADT780S ADT780S 매뉴얼 · 제조사 원문 자료입니다. 사양은 제조사 사정에 따라 변경될 수 있습니다.

Safety Information & Cautions

- Please read the user manual before operation.
- The ADT780–1K–EPUMP is designed to generate over 1,000 psi (70 bar). Please use caution.
- Before use, ensure outlet connections are secured tightly.
- Before making any connections ensure the unit is vented.
- During in use or shut off, do not stand in front of the vent port.
- Ensure there is room for ventilation around the unit to ensure proper airflow.
- Avoid use in dusty, wet, flammable, and explosive environments.
- Do not put the device under direct sunlight for a long time.

Remark:

A: Additel has made a concerted effort to provide complete and current information for the proper use of the equipment. The product specifications and other information contained this manual are subject to change without notice.

B: Above pictures are just for reference.

Additel Corporation, USA
www.additel.com

Configuration

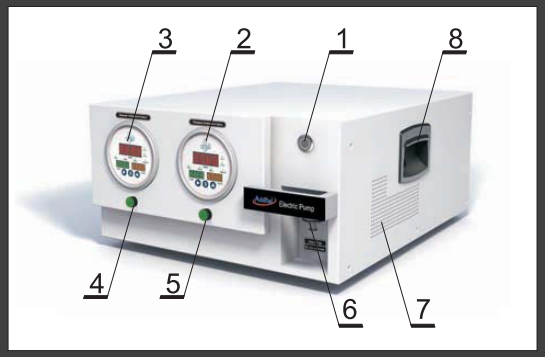

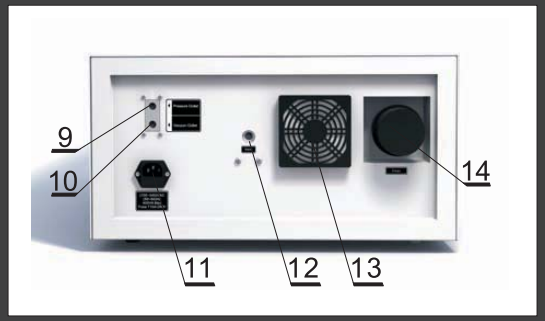

1. **Power on–off**
2. **Vacuum control meter**
3. **Pressure control meter**
4. **Pressure control switch**
5. **Vacuum control switch**
6. **Liquid collector**
   (open the bottom screw to drain out contaminants)
7. **Cooling fan in take**
8. **Handle**
9. **Pressure outlet port**
   (1/8" BSP female)
10. **Vacuum outlet port**
    (1/8" BSP female)
11. **Power socket**
12. **Vent port**
    (venting will remove any liquid and dust)
13. **Cooling fan**
14. **Air filter**
    (Make pressure control when air inletting)
    (need to change periodically)

Pressure set panel

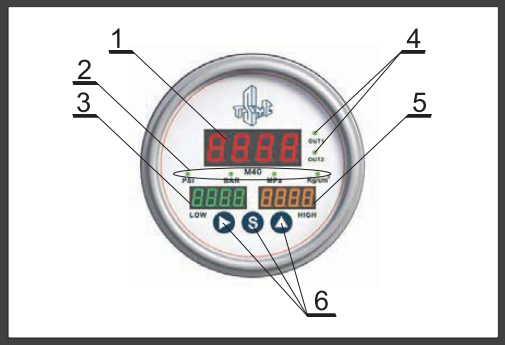

Figure 1-1 Pressure/vacuum meter's panel

1. **Current pressure value**
2. **Pressure unit**
   (push the button S change and select units)
3. **Lower pressure limit**
4. **Relay status indicator**
5. **Upper pressure limit**
6. **Function buttons:** S, ▶, ▲

원문: Additel ADT780S ADT780S 매뉴얼 · 제조사 원문 자료입니다. 사양은 제조사 사정에 따라 변경될 수 있습니다.

Operation

1.1 Preparation

- Connect pressure hoses to the outlet ports. Ensure the pressure hoses are rated for the max pressure generation of the EPUMP.
- Empty the liquid collector prior to use.
- When pressure reaches the high limit, the EPUMP may exhaust or vent out of the back of the unit. Safety valves are programmed to prevent the EPUMP from over pressuring.

1.2 Pressure/vacuum generation

- Power on the pressure booster and the display will illuminate.
- Press the control switch and the pump will begin pressure/vacuum generation. When the control switch is on it is illuminated green the pressure/vacuum will be generated until the control limits are reached and the electronic pump will stop. When pressure/vacuum drops below the low limit the electrical pump will begin pressure/vacuum generation. (Note: When the control switch is on and pressure/vacuum has been generated the control switch can be selected to the off position which will not vent the pressure/vacuum but prevent further pressure/vacuum generation)

1.2.1 Selecting the pressure/vacuum unit

- Push the button S to select the desired pressure unit between “psi”, “bar”, “MPa” and “kgf/cm2”

1.2.2 Set the lower/upper limit

- Refer the figure 1–1, press and hold button S. The left digit on the lower limit will flash. The flashing digit can now be set by using the ▲ button which will increment the selected number.
- Push the ▶ button to select the desired digit to be changed.
- Press the S button to exit the menu.
- To completely vent the system, power off the EPUMP.

Note: The lower limit value must be less than upper limit value.

Figure 1-2 Display Lock Mode

Figure 1-3 Display Unlock Mode

원문: Additel ADT780S ADT780S 매뉴얼 · 제조사 원문 자료입니다. 사양은 제조사 사정에 따라 변경될 수 있습니다.

Operation

1.3 Lock/unlock the display

Press and hold the button to enter lock mode. The LED displays "Loc" see figure 1–2. This means all display buttons locked. Press and hold the button to unlock the display. The LED displays "unL" see figure 1–3. This means the display can be operated as usual.

1.4 Positive pressure zero

To zero the pressure/vacuum measurement, ensure the EPUMP is vented to atmosphere and simultaneously press and . The displayed pressure will change to zero when the process is complete.

Maintenance

1. Filter replacement

Over time and use, the air filter will need to be replaced. The recommended interval to replace the air filter is yearly. Press in the air filter cover (see figure 1–1) and unscrew the air filter cover counterclockwise (see figure 1–2). Remove the filter and replace it with a new one.

2. Emptying the liquid collector

It is possible for some liquid to gather in the liquid collector. When liquid is present, it should be drained before use. If not, there is some potential for the liquid to damage the vacuum pump.

A. Remove the vacuum hose on the back panel of the EPUMP.

B. Put a container under the liquid collector. Unscrew the cap to the liquid collector by turning it counterclockwise (see figure 1–3).

C. After all of the liquid drains out screw back on the liquid collector cap(see figure 1–4)

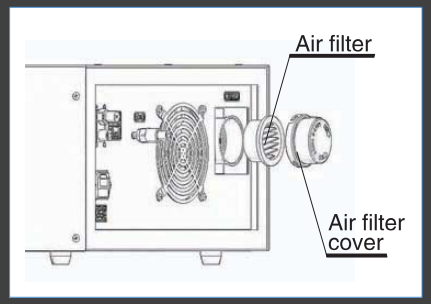

Figure 1-1

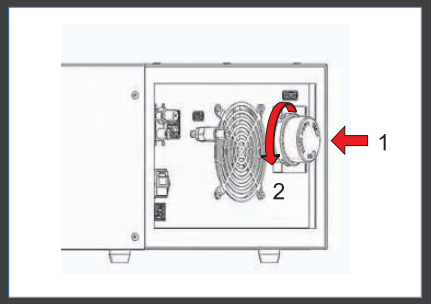

Figure 1-2

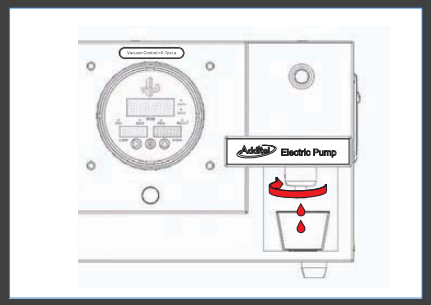

Figure 1-3

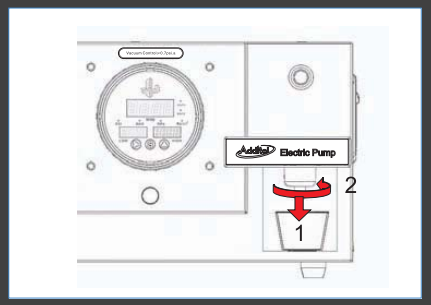

Figure 1-4

원문: Additel ADT780S ADT780S 매뉴얼 · 제조사 원문 자료입니다. 사양은 제조사 사정에 따라 변경될 수 있습니다.

Configuration

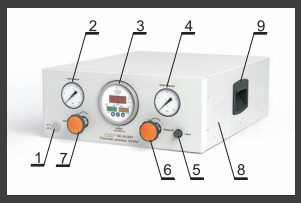

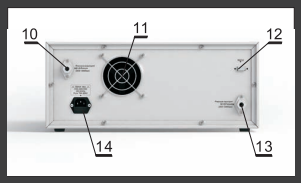

1. **Power on–off**
2. **Inlet pressure meter**
3. **Set pressure indicator**
4. **Outlet pressure meter**
5. **Outlet vent valve**
6. **Outlet pressure shutoff valve**
7. **Inlet pressure shutoff valve**
8. **Cooling fan in take**
9. **Handle**
10. **Pressure outlet port** (1/8" BSP female, 20~260bar)
11. **Cooling fan**
12. **RS232 communication port**
13. **Inlet pressure port** (1/8"BSP female, 20~150bar)
14. **Power supply socket:** (90~250)VAC, (50~60)Hz

Pressure set panel

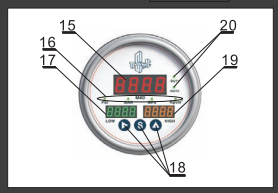

Figure 1-1 Pressure set panel

15. **Current pressure value**
16. **Pressure unit** (push the button S change and select units)
17. **Lower pressure limit**
18. **Function button:** S, ▶, ▲
19. **Upper pressure limit**
20. **Relay status indicator**

Overview

ADT780-3K-BST air pressure source uses electric driven pumps to generate positive pressure. It can boost pressure from (20~150) bar to (20~260) bar. This system supplies a steady and reliable air source for Additel 780 series pressure controllers.

Specification

- **Inlet pressure range:** (20~150) bar
- **Outlet pressure range:** (20~260) bar
- **Safety valve release pressure:** (270 ± 5) bar
- **When the set pressure is higher than inlet pressure, the booster starts to increase pressure. However, when the set pressure is lower than inlet pressure, the inlet pressure vents to a controllable pressure.**
- **When the actual pressure is below the lower limit of set pressure, the booster starts to increase pressure. But when the pressure is higher than upper limit of set pressure, the booster will stop controlling pressure.**
- **Media: Dry and clean air or nitrogen.**
- **Inflow volume:** 500ml/min
- **Power supply:** (90~250) VAC, (50~60) Hz, 500W max
- **Dimension:** 23.9" X 17.8" X 7.3" LWH (607 X 452 X 185mm)
- **Pressure outlet/inlet port:** 1/8" BSP female thread

Safety Information & Cautions

- Please read the user manual before operation.
- Before use, ensure outlet connections are secured tightly.
- Before making any connections ensure the unit is vented.
- During in transport, please open the inlet shutoff valve and outlet shutoff valve.
- Ensure there is room for ventilation around the unit to ensure proper airflow.
- Avoid use in dusty, wet, flammable, and explosive environments.
- Do not put the device under direct sunlight for a long time.

Additel 780-3K-BST
Booster User Manual
[Version No.: 1509V01]

원문: Additel ADT780S ADT780S 매뉴얼 · 제조사 원문 자료입니다. 사양은 제조사 사정에 따라 변경될 수 있습니다.

Operation

1.1 Preparation

- Ensure the pressure on the inlet and outlet meters are not over the desired pressure and vent if necessary.
- Close the inlet shutoff valve and outlet shutoff valve. Then open the vent valve.
- Connect the booster with air supply source and power supply and pipeline routine. Check the cooling fan to ensure it is working.
- Open the inlet shutoff valve and close the vent valve.

1.2 Set pressure

Power on the pressure booster and the display will illuminate.

1.2.1 Selecting the pressure unit

Push the button S to select the desired pressure unit between "psi", "bar", "MPa" and "kgf/cm2"

1.2.2 Set the lower/upper limit

- Refer the figure 1–1, press and hold button S. The left digit on the lower limit will flash.
- The flashing digit can now be set by using the ▶ button which will increment the selected number. Push the ▲ button to select the desired digit to be changed.
- Press the S button to exit the menu.
- To completely vent the system, power off the pressure booster and open the vent valve.

Note: The lower limit value must be less than upper limit value.

1.2.3 Lock/unlock the display

Press and hold the button ▶ to enter lock mode. The LED displays "Loc" see figure 1–2. This means all display buttons are locked. Press and hold the button ▲ to unlock the display. The LED displays "unL" see figure 1–3. This means the display can be operated as usual.

1.2.4 Pressure zero

To zero the pressure measurement, ensure the booster is vented to atmosphere and simultaneously press ▶ and ▲. The displayed pressure will change to zero when the process is complete.

Figure 1-2 Display Lock Mode

Figure 1-3 Display Unlock Mode

Drawing

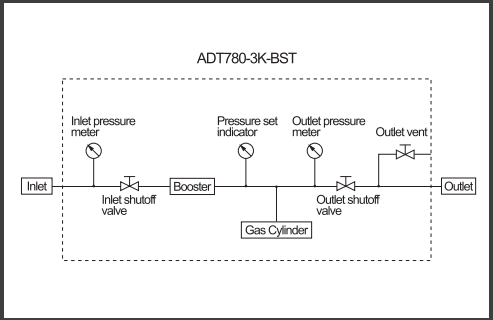

Remark:

A: Additel has made a concerted effort to provide complete and current information for the proper use of the equipment. The product specifications and other information contained this manual are subject to change without notice.

B: Above pictures are just for reference.

Additel Corporation, USA
www.additel.com

원문: Additel ADT780S ADT780S 매뉴얼 · 제조사 원문 자료입니다. 사양은 제조사 사정에 따라 변경될 수 있습니다.