Clocks

Profil 930-940

Profil TGV 930-940

Independent QUARTZ on battery

IRIG B/AFNOR - DHF time signal reception

Receiver Minute, ½ minute, Second impulses

Radio synchronisation on battery

INSTALLATION AND OPERATING INSTRUCTIONS

Bodet
www.bodet-time.com

BODET Time & Sport
1 rue du Général de Gaulle
49340 TREMENTINES I France
Tél. support France: 02.41.71.72.99
Tel. support export: +33 241 71 72 33

afaq ISO 9001 Qualité AFNOR CERTIFICATION
afaq ISO 14001 Environnement AFNOR CERTIFICATION
Trémentines plant
100% papier recyclé

Réf : 605751 Z

Upon receipt, always check the product for damage during shipment.
If any is found, you may file a damage claim with the carrier.

원문: Bodet Profil TGV 930 사용자 설명서 · 제조사 원문 자료입니다. 사양은 제조사 사정에 따라 변경될 수 있습니다.

Table of content

I - INITIAL VERIFICATION 3
1.1 Unpacking the clock 3
1.2 Cleaning 4

II - INSTALLATION 4
2.1 Single Face indoor clock 4
2.2 Single Face outdoor clock 4
2.3 Double Face clock 5

III - POWER SUPPLY 5
3.1 Clock with batteries 5
3.2 Clock with 230V power supply 5
DHF Slave clock (230V) : 5
AFNOR/Irig-B clock 230V : 5
3.3 AFNOR Clocks with TBT power supply 6
3.3.1 Indoor 6
3.3.2 Oudoor 6
3.4 DHF Clocks with TBT power supply 7

IV - SETTING 7
4.1. Impulses slave clock 7
½ minute and minute 24V // receiver, 7
½ minute and minute serial receiver (Automatically radio synchronized by the BT radio). 8
Seconde 24V // receiver 8
4.2. AFNOR/IRIG-B time signal reception 9
4.2.1 230V Slave clock 9
4.2.2 Indoor TBT 6-24V slave clock 9
4.2.3 TBT 6-24V Outdoor Slave clock 10
4.3. Independant QUARTZ clock on battery 10
4.4. DCF radio receiver clock 10
4.5. ALS 162 Radio receiver clock 10
4.6. MSF radio receiver clock 11
4.7. DHF clock 11
4.8. Independent Quartz on mains with remote keyboard 11

V - TECHNICAL FEATURES 12

VI - WHAT TO DO IF...? ...CHECK. 16

2

원문: Bodet Profil TGV 930 사용자 설명서 · 제조사 원문 자료입니다. 사양은 제조사 사정에 따라 변경될 수 있습니다.

I - INITIAL VERIFICATION

Thank you for choosing a BODET clock. This product has been carefully designed for your satisfaction based on ISO9001 quality requirements. We advise you to read this manual thoroughly before attempting to manipulate the clock.
Keep this booklet during all the life of your clock, so that you can refer to it each time it will be necessary.
B**odet accepts no responsibility for accidents resulting from any use not conforming with the above provisions**.
Any modification to the product will invalidate the guarantee.

1.1 Unpacking the clock

Unpack with caution and check the contents of the packaging. It must contain :

- l'horloge Profil et ce manuel,
- The Profil clock,
- 1,5 volt battery, type LR 6 for battery version,
- A cleaning kit (impregnated antistatic cloth),
- the clock support which is delivered separately. It is delivered with the outdoor and the 230V AFNOR/Irig-B time signal reception clocks. It is an option for internal clocks.
- This booklet.

Versions : a descriptive label is fixed to the back of the clock :

QZ 1.5V = the clock is independent and quartz operated and battery operated.
ALS 162 1.5V = the clock is radio-synchronised with a ALS 162 antenna and battery operated.
DCF 1.5V = the clock is radio-synchronised with a DCF antenna and battery operated.
MSF 1.5V = the clock is radio-synchronised with a MSF antenna and battery operated.
MN 24V = the clock is a receiver driven by a master clock that sends minute impulses on a parallel line.
1/2MN 24V = the clock is a receiver driven by a master clock that sends ½ minute impulses on a parallel line.
1/2MN SERIE = the clock is a receiver driven by a master clock that sends ½ minute impulses on a serial line.
SEC 24V = the clock is a receiver driven by a master clock that sends second impulses on a parallel line.
AFNOR HM = the clock is a receiver driven by a master clock that sends AFNOR NFS-87500A time coded messages ; it is supplied in 240 VAC.
AFNOR HM TBT = the clock is a receiver driven by a master clock that sends AFNOR NFS-87500A time coded messages ; it is supplied in low voltage 6-24 V.
REC MN 1V5 = the clock is a receiver driven by a control unit "Remote keyboard" or radio synchronised control unit "BT radio" that sends minute impulses 1,5V.
DHF PILE HM/HMS = the clock is radio-synchronised by a DHF transmitter and battery operated.
DHF TBT HM/HMS = the clock is radio-synchronised by a DHF transmitter ; it is supplied in low voltage 6-16 V DC.
DHF 230V HM = the clock is radio-synchronised by a DHF transmitter ; it is supplied in 240 VAC.

Nota : all these versions are not available for all Profil or TGV 930/940 models. Contact your Bodet authorised dealer.

원문: Bodet Profil TGV 930 사용자 설명서 · 제조사 원문 자료입니다. 사양은 제조사 사정에 따라 변경될 수 있습니다.

1.2 Cleaning

Use an antistatic product of similar type to the one shipped in the original packaging. Never use alcohol, acetone or any other solvent liable to damage the casing and filter on your clock.

II - INSTALLATION

Select the location where your clock is to be installed, ensuring for the model with radio synchronisation that radio reception is correct. The radio receiver clock should be installed in a place that is free from electrical interference (cathode tube, transformers, etc.). Avoid fixing the clock directly to a metal or reinforced concrete partition or wall.
The best reception conditions are outside buildings or near by a windows.
The orientation clock (dial perpendicular to the emitter direction) towards the emitter enhances the reception.

2.1 Single Face indoor clock

Most of the indoor clocks are simply hanged on a screw head.
- Place the screw (Ø 4) at the desired height leaving the head 3 mm outside.
- If necessary, carry out the various connections (external supply see page 5 and connection to a time distribution network : see page 7).
- Hang the clock.

See page 12 for the dimensions.

2.2 Single Face outdoor clock

- Remove the wall bracket (1) of the clock, by giving a quarter turn in the anticlockwise.
- Run the cables through the hole (2) and fit the wall bracket (1) using 2 screws Ø6.
- - If necessary, carry out the various connections (external supply see page and connection to a time distribution network : see page).
- Present the clock on the wall bracket (1), then turns it a quarter turn in the clockwise so that the clock is in the correct position.

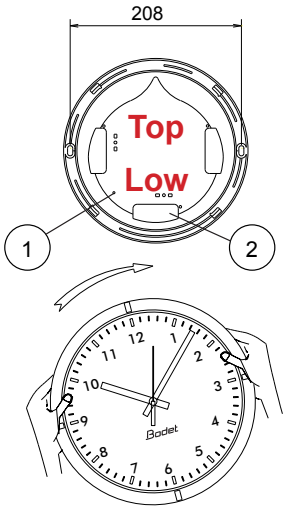

4

원문: Bodet Profil TGV 930 사용자 설명서 · 제조사 원문 자료입니다. 사양은 제조사 사정에 따라 변경될 수 있습니다.

2.3 Double Face clock

- Fit the bracket on the wall or on the ceiling with 2 screws Ø6.
- If necessary, carry out the various connections (external supply see page 5 and connection to a time distribution network : see page 7).
- Present both clock on the bracket, then turns it a quarter turn in the clockwise so that the clocks are in the correct position.

See page 12 for the dimensions.

III - POWER SUPPLY

3.1 Clock with batteries

Insert the battery (ies) matching up the [+] and [-] symbols.

Caution : You should not drop, heat, make holes in, dismantle, modify or short circuit the batteries, nor allow them to come into contact with water or fire.
Dispose of used batteries in accordance with the instructions given and with the laws in force in the country.

3.2 Clock with 230V power supply

Installation and maintenance of this equipment must be carried out by qualified personnel only.
Electrical installation must comply with current standard CEI 364.
The mains supply for the clocks must include a neutral phase circuit breaker 6A, rapidly accessible.
This circuit breaker must be switched off during maintenance operations.
Note : the power supply wires must be linked near their fixing point.

DHF Slave clock (230V) :

- Connect the power cable (1.5m) on the 230V power source.

AFNOR/Irig-B clock 230V :

- Remove the black protective hood which is on the terminal (C). Connect mains supply 230 Volt 50 Hz to the supply card terminal: max.1,5 mm² wire and bare on 5 mm. This equipment belong to the electric class II, so, the connection to the earth is not compulsory.
Put the protective cover back in place. Lock the wires with collars (S).
Caution: to simplify the crossing of the cable in the double side bracket ; remove the sheath on a length of 500mm.

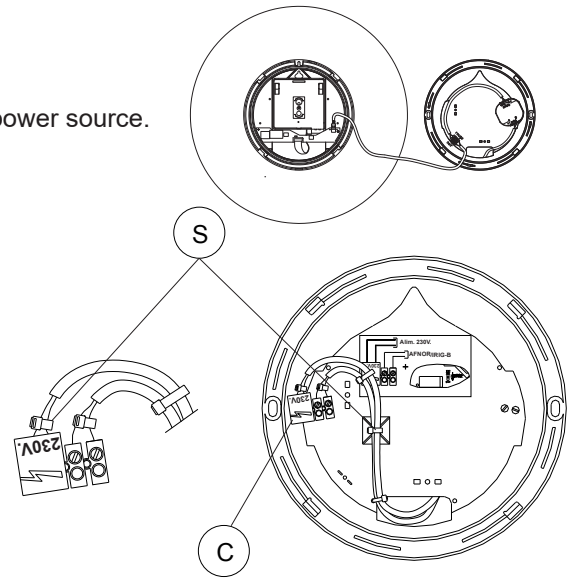

원문: Bodet Profil TGV 930 사용자 설명서 · 제조사 원문 자료입니다. 사양은 제조사 사정에 따라 변경될 수 있습니다.

Independent Quartz clock on mains :

Single Face.

- Connect mains supply to the terminal (11) of the power supply unit.
- Connect the telephone cable of the fake battery (13) on terminal (12) of the power supply unit.
- Set the fake battery (13) in its location with care for polarities.

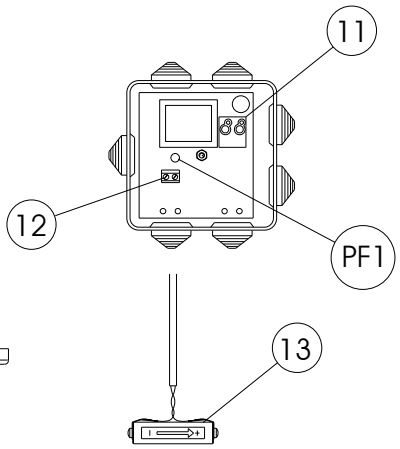

Double Face.

- Connect mains supply to the terminal (11) of the power supply unit.
- Cut each telephone cable at 30cm from the battery imitation on each clock, connect them on terminal (10) of the double side bracket.
- Connect a telephone cable between terminal (10) of the double sided bracket and terminal (12) of the power supply unit.
- Install each battery imitation (13) in each clock movement with care for polarities.

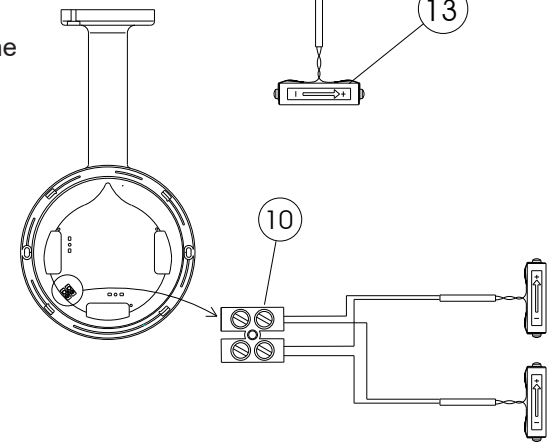

3.3 AFNOR Clocks with TBT power supply

3.3.1 Indoor

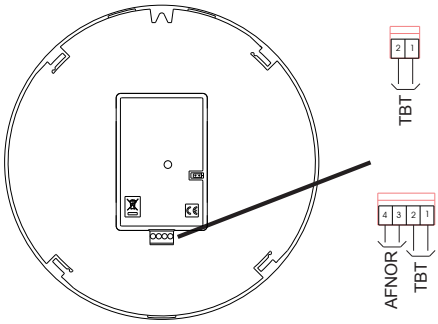

Connect the low voltage (TBT) power supply (6 to 24V DC) to the connectors 1 and 2: maximum 1,5 mm² wire section (5mm bare).
No polarity to respect.

Without power supply, the clock operates during more than 1 hour. If the clock has got a second hand, the latter stops at 12h. When the clock has no more running reserve, it stops. When the power and the AFNOR signal are back then the clock is set to the correct time. When the power is back but not the AFNOR signal, the hands are driven to 4h or 12h.
The indoor AFNOR clock synchronizes on the AFNOR signal except between 2:55 p.m. to 4:16 p.m. to avoid disturbance on the control of its hands' position.

3.3.2 Oudoor

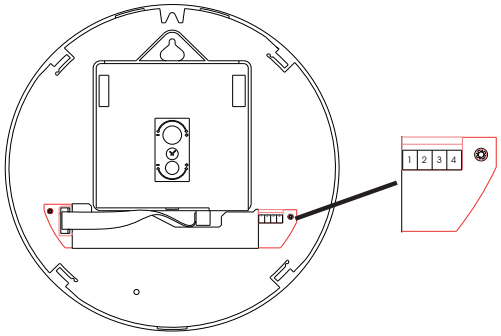

Connect the low voltage (TBT) power supply (6 to 24V AC/DC) to the connectors 1 and 2: maximum 1,5 mm² wire section (5mm bare).
No polarity to respect.
Nota : for the «abattoir» clocks which are pre-wired, connect the power supply to the terminal block, white wire (-) and brown wire (+).
In case of power cut the time is memorised.

원문: Bodet Profil TGV 930 사용자 설명서 · 제조사 원문 자료입니다. 사양은 제조사 사정에 따라 변경될 수 있습니다.

When the power and the Afnor signal are back then the clock is set to the correct time.
When the power is back but not the Afnor signal, the hands are driven to 12h00.
It is compulsary, for a correct running, to respect the following parameters.
These parameters are calculated considering 8/10 mm wire section with 1A (Microquartz Delta).

	Number of clocks	
Distance	24VDC	15VDC
100 m	71	32
200 m	41	16
300 m	27	10
400 m	20	6
500 m	16	6
600 m	13	5
1 km	8	3

Number of clocks	Distance in m	
	24VDC	15VDC
1	8300	3200
10	830	320
20	415	160
30	275	105
40	208	75
50	165	45

3.4 DHF Clocks with TBT power supply

Connect the low voltage (TBT) power supply (6 to 16V DC) to the connectors 1 and 2: maximum 1,5 mm2 wire section (5mm bare).

No polarity to respect.

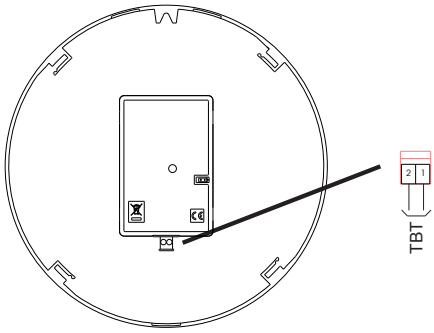

IV - SETTING

NOTA : to respect the security rules, the time distribution network must be be SELV-type.

4.1. Impulses slave clock

A time distribution network emits only impulses, so that it is necessary to set the clock at the time of this network.
To add a clock on a network, it is not necessary to stop this network. It is enough to set on time and when it will received the next impulse from the master clock, it will add a unit (Minute, ½ minute or second according to the impulses type).

½ minute and minute 24V // receiver,

- Connect the time distribution network to terminals 1 and 2 on the terminal strip (3).
Leave works 2 minutes.
- If the clock, or one of the clocks in case of a double side mounting, is one minute (or ½ minute according to the movement type) late: stop the emitter, reverse the connection on terminal (3) and put the clock forward 2 minutes (or 1 minute), then restart the emitter.
In fact, the same impulse is either positive or negative according to the way to connect and the initial position of the movement, it will take or not the first impulse.

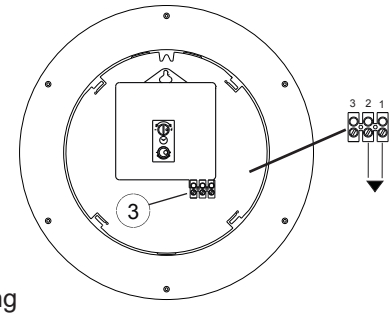

원문: Bodet Profil TGV 930 사용자 설명서 · 제조사 원문 자료입니다. 사양은 제조사 사정에 따라 변경될 수 있습니다.

½ minute and minute serial receiver (Automatically radio synchronized by the BT radio).

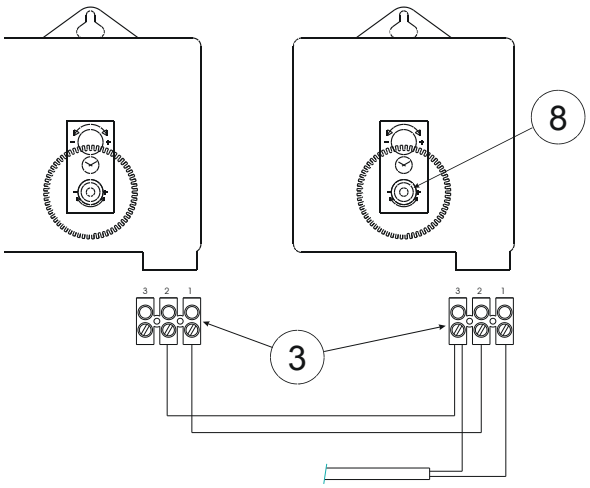

- Connect the time distribution network to terminals 1 and 2 on the terminal strip (3).
- The terminal 3 of the terminal strip (3) is available. You can use it to connect a double side clock following the diagram opposite.
To insure the continuation of the serial distribution network, (to avoid to cut the serial line when a slave clock is disconnect) connect the 100 Ohms 1/2 Watt resistor delivered (for 65mA).

Leave works 2 minutes.
- If the clock, or one of the clocks in case of a double side mounting, is ½ minute (or one minute according to the movement type) late : stop the emitter, reverse the connection on terminal (3) and put the clock forward 1 minute (or 2 minutes), then restart the emitter.
In fact, the same impulse is either positive or negative according to the way to connect and the initial position of the movement, it will take or not the first impulse.

Seconde 24V // receiver

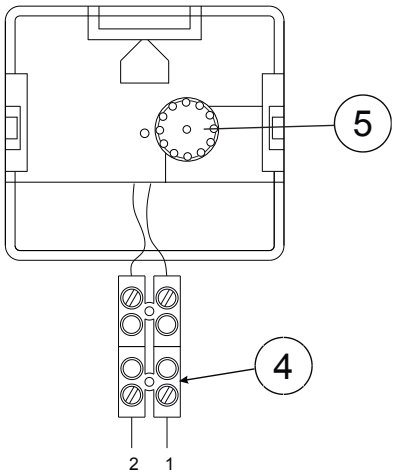

- Connect the time distribution network to terminals 1 and 2 (4).
A time distribution network “Second” emit only impulses, so that it is necessary to set the clock at the time of this network with the wheel (5).

8

원문: Bodet Profil TGV 930 사용자 설명서 · 제조사 원문 자료입니다. 사양은 제조사 사정에 따라 변경될 수 있습니다.

4.2. AFNOR/IRIG-B time signal reception

4.2.1 230V Slave clock

- Connect the time signal network to terminals 1 and 2 (2).
Before fixing the clock on its wall support, check that, on the PCB, the dip switch (D) is in the “Start” position.
Lock the wires with collars (S).

Caution : the locking must be well done to get the electrical contact.

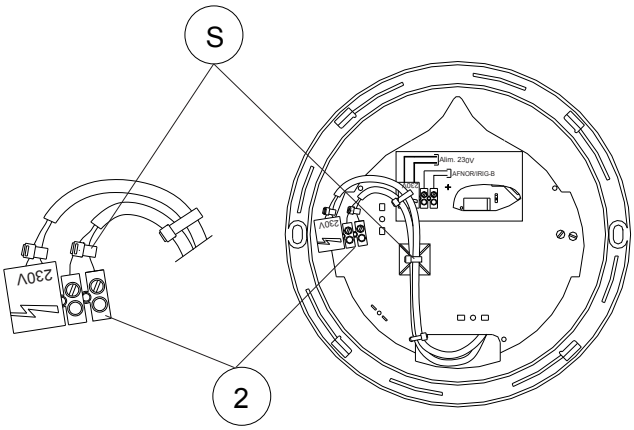

- When switching on power supply, hands are set at 12.00 until the correct reception of the time signal is achieved. After 3 successive coherent AFNOR time signals are received, the clock starts and automatically get on time with fast impulses.

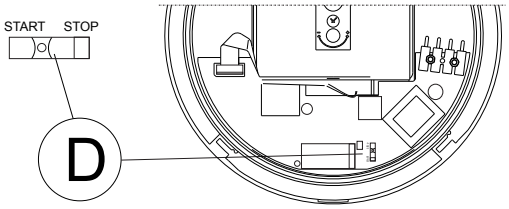

4.2.2 Indoor TBT 6-24V slave clock

- Connect the time signal network to terminals 3 and 4.
No polarity to respect.
Nota : for the «abattoir» clocks which are pre-wired, connect the AFNOR to the terminal block, green and yellow wires.

- When switching on power supply, hands are set at 4h00 or 12h00 until the correct reception of the time signal is achieved. After 3 successive coherent time signals are received, the clock starts and automatically gets on time with fast impulses.

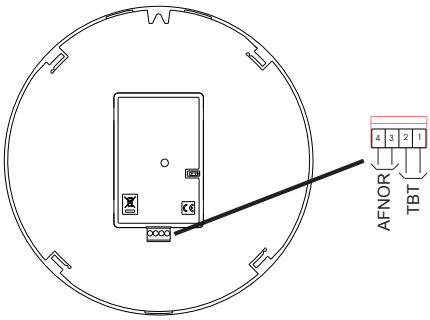

원문: Bodet Profil TGV 930 사용자 설명서 · 제조사 원문 자료입니다. 사양은 제조사 사정에 따라 변경될 수 있습니다.

4.2.3 TBT 6-24V Outdoor Slave clock

- Connect the afnor line on connectors 3 and 4.
The terminals 1 and 2 are reserved for power supply (see page 6).
- When receiving the power, the hands are driven to 12h00 until the clock receives a radio signal. After controlling the data (3 coherent messages) the clock is automatically driven to the current time by accelerated impulses.

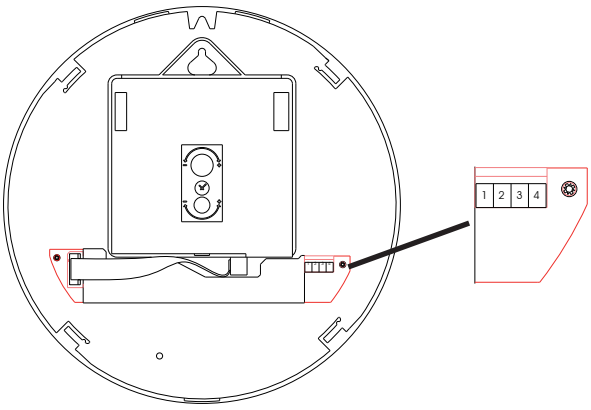

4.3. Independant QUARTZ clock on battery

Insert the battery (1.5 volt LR6 type) matching up the [+] and [-] symbols.
Immediately, the clock start, set the clock on time with the wheel (5).

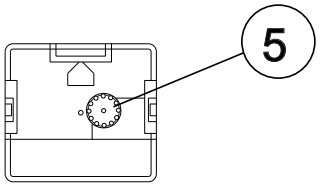

4.4. DCF radio receiver clock

Set the 1,5 V LR6 battery in its location respectful of the polarities.
When inserting the batteries, hands are set at 4h00, 8h00 or 12h00 until the correct reception of the time signal is achieved.
After the validation of the data, the clock set itself rapidly and automatically.
In normal functioning, the clock will listen to the time message every two hours. To limit the consumption, the listening is limited to 10 minutes. A correction is made, if necessary (if there is a difference between the time received and the time displayed), twice a day.

4.5. Radio receiver clock

Set the 1.5 V LR6 batteries in their location respectful of the polarities.
When inserting the batteries, hands are set at 4h00 or 12h00 until the correct reception of the time signal is achieved. After 3 successive coherent time signals are received, the clock starts and automatically gets on time with fast impulses.
In case of difficult reception, the clock synchronisation can last several hours keeping in mind that the signal reception is better during the night.

원문: Bodet Profil TGV 930 사용자 설명서 · 제조사 원문 자료입니다. 사양은 제조사 사정에 따라 변경될 수 있습니다.

4.6. MSF radio receiver clock

Set the 1,5 V LR6 battery in its location respectful of the polarities.
The clock will start a test cycle (the hands will automatically stop at 4 o'clock).
The radio synchronization process then starts. If the reception is possible, the exact time is set automatically in accelerated mode.
The clock movement receives the messages transmitted though long waves (60.0 kHz) from the MSF emitter situated in Rugby (UK) and set to the GMT time. Local conditions of reception are a major parameter in the signal quality.
In case of difficult reception, the clock synchronisation can last several hours keeping in mind that the signal reception is better during the night.

4.7. DHF clock

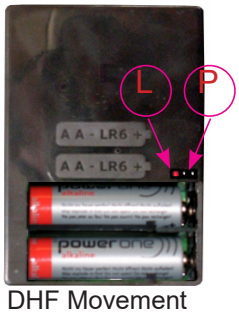

DHF Movement
(battery operated)

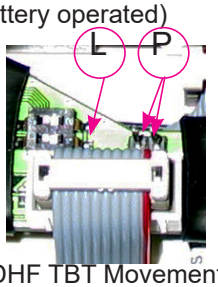

DHF TBT Movement
(6-16V)

Ensure that the transmitter is set in "Init" mode prior to the clock installation.
The clock is delivered in "Init" mode. To check this, ensure that, when the clock is powered, the LED (L) is blinking once per second.
Otherwise, shunt the two pins (P) for more than 4 seconds.
When inserting the batteries matching up the [+] and [-] symbols or switching on power supply (for TBT clocks), hands are set at 4h00 or 12h00 until the correct reception of the time signal is achieved.
The clock will try to pick up the radio signal.
If the reception is good, the clock is synchronised automatically.
Without synchronization for 4 hours, battery operated clocks stop searching for incoming signals. The LED blinks every 3 seconds. To force the clock to search again, shunt the two pins (P) for more than 4 seconds or remove the batteries and insert them again after 10 seconds.
If the reception is poor, increase the transmission power or install a DHF repeater.
Without power supply, the clock stops.
When the power and the DHF signal are back then the clock is set to the correct time. When the power is back but not the DHF signal, the hands are driven to 4h or 12h.

4.8. Independent Quartz on mains with remote keyboard

See the booklet of the remote keyboard, reference : 605198.

원문: Bodet Profil TGV 930 사용자 설명서 · 제조사 원문 자료입니다. 사양은 제조사 사정에 따라 변경될 수 있습니다.

V - TECHNICAL FEATURES

Dimensions :

Indoor Profil and TGV 930

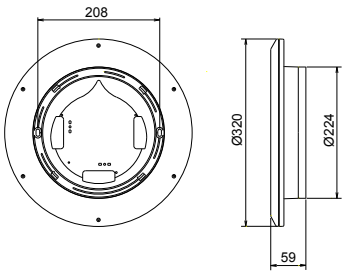

Profil and TGV 930 with anti-theft bracket

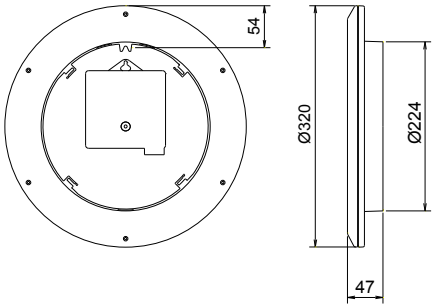

Indoor Profil and TGV 940

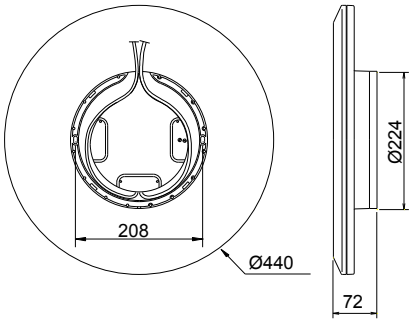

Outdoor Profil and TGV 940 :

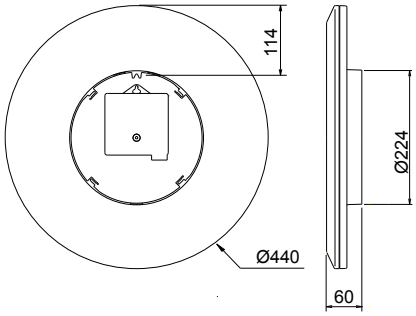

Mounting on bracket

	930 clocks	940 clocks
A	119	143
B	152	92

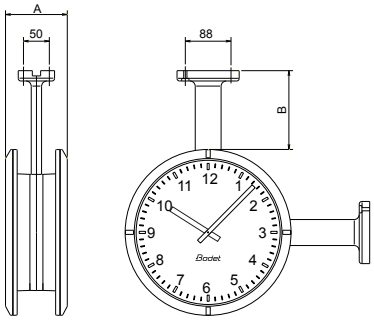

Independent QUARTZ clock on battery:[1]

Power supply : 1,5V LR6 battery.

Autonomy : > 12 months.

Accuracy : ±1 second / day.

1 The operating temperature range of these clocks is -25°C to +55°C when using Lithium batteries.

원문: Bodet Profil TGV 930 사용자 설명서 · 제조사 원문 자료입니다. 사양은 제조사 사정에 따라 변경될 수 있습니다.

DCF radio synchronisation clock on battery :

Power supply : 1,5V LR6 battery. Autonomy : > 1 years.
Accuracy : absolute with automatic summer/winter changeover.
The clock movement is catching the time signal from the DCF77 emitter based in Mainflingen Germany (Frankfurt). This emitter transmits long wave signals at 77,5 kHz and is tuned for Western Europe time. The local reception conditions are very important. After the clock setting to time by radio achieved , the clock movement operates with its internal time basis and compares the time every 2 hour with the DCF signal.
In addition to a perfect accuracy, the clock movement will also manage automatically the summer /winter time changeovers.

ALS 162 Radio synchronisation clock on battery :

Power supply: 2 x 1.5V LR6 (C) batteries.
Autonomy : HMS clock > 2 years, HM clock > 3 years.
Accuracy : absolute with automatic summer/winter changeover.
The clock movement receives the messages transmitted though long waves 162 kHz from the ALS 162 emitter and set to the western European time. Local conditions of reception are a major parameter in the signal quality.
In addition to a perfect accuracy, the clock movement will also manage automatically the summer /winter time changeovers.

MSF radio synchronisation clock on battery :

Power supply : 1,5V LR6 battery. Autonomy : > 1 year.
Accuracy : absolute with automatic summer/winter changeover.
The clock movement receives the messages transmitted though long waves (60.0 kHz) from the MSF emitter situated in Rugby (UK) and set to the GMT time. Local conditions of reception are a major parameter in the signal quality.
In addition to a perfect accuracy, the clock movement will also manage automatically the summer /winter time changeovers.

DHF clock :

Power supply: 2 x 1.5V LR6 (C) batteries. Autonomy: > 2 years.
Accuracy of the master clock.

DHF TBT clock :

Power supply: 6-16V DC.
Consumption : from 15mA at 6V to 8mA at 16V.
Accuracy of the master clock.

DHF 230V clock :

Power supply: 230VAC 0,2A.
Accuracy of the master clock.

Receiver impulses Minute 24V // :

Reversed polarised minutes impulses 9,6 mA.
Accuracy of the master clock.

Receiver impulses ½ minute serial :

Reversed polarised ½ minutes impulses 0,9V/65 mA.
Accuracy of the master clock.

100% papier recyclé

원문: Bodet Profil TGV 930 사용자 설명서 · 제조사 원문 자료입니다. 사양은 제조사 사정에 따라 변경될 수 있습니다.

Receiver impulses minute serial (Automatically radio synchronized by the BT radio) :[2]

Reversed polarised minutes impulses 0,9V/65 mA.
Accuracy of the master clock.

Receiver impulses ½ minute 24V // :

Reversed polarised ½ minutes impulses 9,6 mA.
Accuracy of the master clock.

Receiver impulses Second 24V // :

IReversed polarised seconds impulses 5,3 mA.
Accuracy of the master clock.

AFNOR/IRIG-B time signal reception :

Permanent power supply : 230V ; 15mA. Power supply schema : EE or EN.
During 1 hour without reception of the time signal the clock operates with its own time basis.
If the signal recovery is achieved within this hour, the clock will be resynchronised automatically.
After 1 hour the clock is reset and hands are set on position 12.00.
- Without power supply 230V the clock operates with its battery during 1 hour.
- After 1 hour without time signal reception or if the battery voltage drops down, hands are set position 12.00 until power supply recovery.

The clock complies with European standards : EN50082-1, EN55022 class B and EN60950.
Accuracy of the master clock.
The electronic of the clock is protected by a fuse 0,2AT/250V.

AFNOR/IRIG B coded time TBT Slave clocks :

Indoor Slave clocks : Permanent power supply : 6-24V DC ;
Consumption : from 10mA at 6V to 8mA at 24V.
Outdoor Slave clocks : Permanent power supply : 6-24V AC/DC ;
Consumption : from 41mA at 6V to 14mA at 24V.
If no signal is received for less than one hour, the slave clock will work as an independent clock using its own time basis.
If a signal is received within one hour, the clock will automatically display the correct time. After one hour, the hands are driven to 12h00 until a message is received.

		Power supply	Operating temperature	Protection	Lisibility	Weight
Profil 930	Quartz	1.5 LR6 battery	-5°C to +50°C	IP401	20m	0.7kg
	Radio DCF/MSF	1.5 LR6 battery	-5°C to +55°C	IP401	20m	0.7kg
	Radio ALS 162	2 x 1.5V LR6 batteries	-5°C to +50°C	IP401	20m	0.7kg
	Minute / ½ minute receiver		-10°C to +50°C	IP401	20m	0.9kg
	AFNOR receiver low voltage	6 to 24 V DC	-5°C to +50°C	IP401	20m	1 kg
	Second 24V receiver		-10°C to +50°C	IP401	20m	0.7kg
	DHF receiver	2 x 1.5V LR6 batteries	-5°C to +50°C	IP401	20m	1.2 kg
	DHF receiver low voltage	6 to 16 V DC	-5°C to +50°C	IP401	20m	1 kg

2 The operating temperature range of these clocks is -25°C to +55°C but the operating temperature range of the box is -10°C to +50°C.

원문: Bodet Profil TGV 930 사용자 설명서 · 제조사 원문 자료입니다. 사양은 제조사 사정에 따라 변경될 수 있습니다.

		Power supply	Operating temperature	Protection	Lisibility	Weight
Profil 940	Quartz	1,5 LR6 battery	-5°C to +50°C	IP401	35m	1.9kg
	Radio DCF/MSF	1,5 LR6 battery	-5°C to +55°C	IP401	35m	1.9kg
	Radio ALS 162	2 x 1.5V LR6 batteries	-5°C to +50°C	IP401	35m	1.9kg
	Minute / ½ minute receiver		-10°C to +50°C	IP401	35m	2.1kg
	AFNOR receiver low voltage	6 to 24 V DC	-5°C to +50°C	IP401	35m	1.9kg
	Second 24V receiver		-10°C to +50°C	IP401	35m	1.9kg
	DHF receiver	2 x 1.5V LR6 batteries	-5°C to +50°C	IP401	35m	1.9kg
	DHF receiver low voltage	6 to 16 V DC	-5°C to +50°C	IP401	35m	1.9kg
Profil 940 Extérieure	Quartz	1.5 LR6 battery	-5°C to +50°C	IP531	35m	2.1kg
	Quartz on mains	230 Volt	-10°C to +50°C	IP531	35m	2.1kg
	Radio DCF/MSF	1.5 LR6 battery	-5°C to +55°C	IP531	35m	2.2kg
	Minute / ½ minute receiver		-10°C to +50°C	IP531	35m	2.3kg
	AFNOR receiver low voltage	6 to 24VAC/DC	-5°C to +50°C	IP531	35m	2.2kg
	DHF receiver	2 x 1.5V LR6 batteries	-5°C to +50°C	IP531	35m	2.4kg
	DHF receiver 230V	230 Volt	-5°C to +50°C	IP531	35m	2.7kg
TGV 930	Quartz	1.5V LR6 Lithium battery	-5°C to +50°C	IP401	20m	0.7kg
	Radio DCF/MSF	1.5V LR6 Lithium battery	-5°C to +55°C	IP401	20m	0.7kg
	Minute / ½ minute receiver		-10°C to +50°C	IP401	20m	0.9kg
	AFNOR receiver	230 Volt 50 Hz ±10%	-10°C to +50°C	IP401	20m	1.3kg
	Second 24V receiver		-10°C to +50°C	IP401	20m	0.7kg
TGV 940	Quartz	1.5V LR6 Lithium battery	-5°C to +50°C	IP401	35m	1.9kg
	Radio DCF/MSF	1.5V LR6 Lithium battery	-5°C to +55°C	IP401	35m	1.9kg
	Minute / ½ minute receiver		-10°C to +50°C	IP401	35m	2.1kg
	AFNOR receiver	230 Volt 50 Hz ±10%	-10°C to +50°C	IP401	35m	2.5kg

Protection class : II.
With the option “waterproof A”, only available on Profil 940 outdoor model, the protection index is : IP55.

원문: Bodet Profil TGV 930 사용자 설명서 · 제조사 원문 자료입니다. 사양은 제조사 사정에 따라 변경될 수 있습니다.

VI - WHAT TO DO IF...? ...CHECK.

What to do if...?	… Check.
• The clock (powered by battery) had stopped.	• The battery has run out. Replace the battery. Resetting of the time and date is, automatic for radio synchronised clocks, manual for independent clocks. Dust on the battery contact terminals (+ and -) can disrupt the power supply to the clock. Clean these contact terminals with a soft dry cloth, if necessary.
• The second hand of a battery operated clock has stopped but the clock is on time.	• Battery threshold is low (less than 1.15V); the second hand has stopped to second 0 to preserve the batteries. Replace the batteries.
• No synchronisation after the installation.	• Check that the type of signal send by the master clock (min, ½ min, AFNOR/ Irig-B) is in accordance with the type programmed in the clock.
• A receiver clock on a ½ minute network is 30s alter after the installation.	• It is impossible for a slave clock to discern between two 1/2 minute impulses which one is the master clock minute stroke, the reversal of the two wires is needed to correct the time.
• Minute or ½ minute parallel receiver stopped.	• Lack of impulse, check the master clock and the network.
• ½ minute serial network stopped.	• Check that the network is not cut off. Measure the in line intensity and check if it is enough (from 65 to 100 mA).
• AFNOR / Irig-B receiver stopped at 12h00.	• Lack of impulse since more than 1 hour, check the master clock and the network.
• DHF clock stopped at 12h00.	• No time message received for more than 24 hours, check the master clock and the DHF transmitter or batteries have run out then replace the batteries.
• Switch again a DHF clock to “initialisation” mode.	• When locked to a transmitter, wireless configuration is saved into the EEPROM. 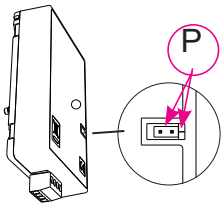 If, for any reason, you have to install the clock again, shunt the two pins (P) for more than 4 seconds to initialize the clock again. 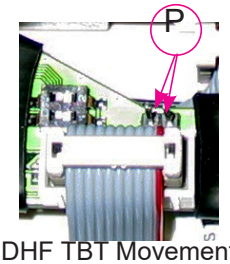 DHF TBT Movement

원문: Bodet Profil TGV 930 사용자 설명서 · 제조사 원문 자료입니다. 사양은 제조사 사정에 따라 변경될 수 있습니다.