XBee Radio Frequency (RF) Modems

XBee-PRO SX RF Modem

User Guide

원문: Digi Digi XBee SX RF Modems 사용설명서(영문) · 제조사 원문 자료입니다. 사양은 제조사 사정에 따라 변경될 수 있습니다.

Revision history—90001517

Revision	Date	Description
A	August 2016	Baseline release of the document.
B	May 2018	Added note on range estimation. Changed IC to ISED.

Trademarks and copyright

Digi, Digi International, and the Digi logo are trademarks or registered trademarks in the United States and other countries worldwide. All other trademarks mentioned in this document are the property of their respective owners.

© 2018 Digi International Inc. All rights reserved.

Disclaimers

Information in this document is subject to change without notice and does not represent a commitment on the part of Digi International. Digi provides this document “as is,” without warranty of any kind, expressed or implied, including, but not limited to, the implied warranties of fitness or merchantability for a particular purpose. Digi may make improvements and/or changes in this manual or in the product(s) and/or the program(s) described in this manual at any time.

Warranty

To view product warranty information, go to the following website:

www.digi.com/howtobuy/terms

Customer support

Gather support information: Before contacting Digi technical support for help, gather the following information:

- Product name and model
- Product serial number (s)
- Firmware version
- Operating system/browser (if applicable)
- Logs (from time of reported issue)
- Trace (if possible)
- Description of issue
- Steps to reproduce

Contact Digi technical support: Digi offers multiple technical support plans and service packages. Contact us at +1 952.912.3444 or visit us at www.digi.com/support.

원문: Digi Digi XBee SX RF Modems 사용설명서(영문) · 제조사 원문 자료입니다. 사양은 제조사 사정에 따라 변경될 수 있습니다.

Feedback

To provide feedback on this document, email your comments to

techcomm@digi.com

Include the document title and part number (XBee RF Modems User Guide, 90001517 B) in the subject line of your email.

원문: Digi Digi XBee SX RF Modems 사용설명서(영문) · 제조사 원문 자료입니다. 사양은 제조사 사정에 따라 변경될 수 있습니다.

Contents

XBee RF Modems User Guide

Applicable firmware and hardware 6
General XBee RF Modem specifications 6
Regulatory conformity summary 6
Power requirements 6
Communication interface specifications 7
General specifications 8
XBee-PRO SX RF Modem specifications 8
Networking specifications 8
Performance specifications 9

Hardware

Front view (RS-232/RS-485 variant) 12
Power connector 12
RS-232/RS-485 serial port 12
RJ-45 pin signals 13
Front view (Analog/Digital I/O variant) 14
Analog and Digital I/O ports 14
Power connector 14
Phoenix 10-pin connector signals 14
Back view (all variants) 15
RSSI LEDs 16
I/O and associate LEDs 16
USB Mini-B port 16
DIP switch 16
Reset and Commissioning buttons 16
Antenna Port 16

Getting started with the XBee RF Modem

Kit requirements 18
System requirements 18
Additional requirements 18
Identify the kit contents 18
Connect to the USB port 18
Connect to the RS-232 port 19
Configure the device using XCTU 20
Discover local XBee RF Modems 20
Configure a network 23

원문: Digi Digi XBee SX RF Modems 사용설명서(영문) · 제조사 원문 자료입니다. 사양은 제조사 사정에 따라 변경될 수 있습니다.

Software libraries 24

Operation

Commissioning Pushbutton behavior 26
XBee-PRO SX RF Modem 26
Interfacing protocols 26
RS-232 operation 27
RS-485 (2-wire) half-duplex operation 28
RS-485 (4-wire) full-duplex operation 29
RS-485 connection guidelines 29
Analog input single-ended voltage operation 30
Analog input current loop operation 30
Analog input differential voltage operation 30
Digital input operation 31
Digital sinking driver output operation 31
Configure analog and digital modes 31
Analog and digital I/O sampling 33

Regulatory information

FCC (United States) 36
FCC Part 15 Class B 36
Labeling requirements (FCC 15.19) 36
Modifications (FCC 15.21) 36
XBee RF Modem approved antennas (30 dBm maximum RF power) 37
ISED (Innovation, Science and Economic Development Canada) 42
RF Exposure 42
ACMA (Australia) 42
Power requirements 42

Troubleshooting

Reset the XBee RF Modem 44

원문: Digi Digi XBee SX RF Modems 사용설명서(영문) · 제조사 원문 자료입니다. 사양은 제조사 사정에 따라 변경될 수 있습니다.

XBee RF Modems User Guide

The XBee RF Modem is an enclosed, compact solution that includes an XBee RF Module and supports communication with systems using RS-232, RS-485, USB, analog input, and digital I/O interfaces. The modem's on-board XBee RF module transmits and receives data from other devices on the same wireless network, allowing you to easily make your existing wired systems wireless.

This user guide does not provide a comprehensive description of the XBee modules—it only covers the interfaces and instructions of the XBee RF Modem. For an extensive guide on use of the XBee RF Module being used on your modem, see the appropriate user guide listed below:

- XBee-PRO SX Module: XBee/XBee-PRO SX RF Module User Guide

Applicable firmware and hardware

This manual supports the following firmware:

- XBee-PRO SX RF Modem: 0x900X

It supports the following hardware:

- XBee RS-232/RS-485 RF Modem
- XBee Analog/Digital I/O RF Modem

General XBee RF Modem specifications

Regulatory conformity summary

This table describes the agency approvals for the devices.

Country	Modem	Approval
United States	XBee-PRO SX RF Modem	Contains FCC ID: MCQ-XBPSX
Canada	XBee-PRO SX RF Modem	Contains IC: 1846A-XBPSX
Australia	XBee-PRO SX RF Modem	RCM

Power requirements

The following table describes the power requirements for the XBee RF Modem.

원문: Digi Digi XBee SX RF Modems 사용설명서(영문) · 제조사 원문 자료입니다. 사양은 제조사 사정에 따라 변경될 수 있습니다.

Specification	Condition	Value
Supply voltage range		7-30 VDC
Typical supply voltage		12 V
Receive current	VCC = 12 V	20 mA
Transmit current	VCC = 12 V	300 mA
Sleep current	VCC = 12 V	5 mA

Communication interface specifications

The following table provides the device's communication interface specifications.

Specification	Condition	Value
USB interface baud rate (software selectable)		1200 - 921600 b/s
RS-232 interface baud rate (software selectable)		1200 - 230400 b/s
RS-485 interface baud rate (software selectable)		1200 - 921600 b/s
Analog inputs		
Absolute voltage rating (each pin)	Maximum: 11 V Minimum: -0.5 V	
Operating input range (observe the absolute voltage ratings shown above)	Single-ended voltage mode	0 - 10 VDC
	Current loop mode	4 - 20 mA
	Differential voltage mode	± 4 VDC
Input impedance	Single-ended voltage mode	13300 Ω
	Current loop mode	120 Ω
	Differential voltage mode	~1 MΩ
Resolution		10 bits
Accuracy	Temperature = 25°C	0.5%
Digital inputs		
Input type		Non-inverting Schmitt trigger gate
Positive-going switching threshold		2.5 V
Negative-going switching threshold		1 V

원문: Digi Digi XBee SX RF Modems 사용설명서(영문) · 제조사 원문 자료입니다. 사양은 제조사 사정에 따라 변경될 수 있습니다.

Specification	Condition	Value
Absolute voltage rating (each pin)	Maximum: 31 V Minimum: -0.5 V	
Input impedance		~1 MΩ
Digital outputs		
Output type		Open collector sinking driver
Maximum sink current		200 mA
Maximum supply voltage for external pull-up resistor		31 V
Resistor pull-ups (switch selectable)		10 kΩ pulled up to 3.3 VDC

General specifications

The following table describes the general specifications for the devices.

Specification	Value
Size	4.500" x 2.750" x 1.125" (11.4 cm x 7.0 cm x 2.9 cm)
Weight	150 g (5.3 oz)
Restriction of Hazardous Substances (RoHS)	Compliant
Data connection	Female RJ-45, 10-pin screw terminal, USB Mini-B
Antenna impedance	50 Ω unbalanced
Maximum input RF level at antenna port	6 dBm
Operating temperature	-40 °C -85 °C (industrial)

XBee-PRO SX RF Modem specifications

Networking specifications

Specification	Value
Modulation	Gaussian Frequency Shift Keying (GFSK)
Spreading technology	Frequency Hopping Spread Spectrum (FHSS)

원문: Digi Digi XBee SX RF Modems 사용설명서(영문) · 제조사 원문 자료입니다. 사양은 제조사 사정에 따라 변경될 수 있습니다.

Specification	Value
Supported network topologies (software selectable)	Peer-to-peer (master/slave relationship not required), point-to-point/point-to-multipoint, mesh
Encryption	Optional 256-bit Advanced Encryption Standard (AES) encryption which may be operated in either cipher block chaining (CBC) mode or counter (CTR) mode. Use the **EE** command to enable encryption. Use the **KY** command to set the encryption key.

Performance specifications

The following table provides the performance specifications for the XBee-PRO SX RF Modem.

Note Range figure estimates are based on free-air terrain with limited sources of interference. Actual range will vary based on transmitting power, orientation of transmitter and receiver, height of transmitting antenna, height of receiving antenna, weather conditions, interference sources in the area, and terrain between receiver and transmitter, including indoor and outdoor structures such as walls, trees, buildings, hills, and mountains.

Specification	Condition	Value
Frequency range		ISM 902 to 928 MHz
RF data rate (Software selectable)	Low data rate	10 kb/s
	Middle data rate	110 kb/s
	High data rate	250 kb/s
Transmit power (software selectable)		Up to 30 dBm
Rural range line of sight	Low data rate	Up to 105 km (65 mi)[1]
Urban range line of sight	Low data rate	Up to 18 km (11 mi)[2]
Receiver sensitivity	Low data rate	-113 dBm
	Middle data rate	-106 dBm
	High data rate	-103 dBm

[1]We estimate rural ranges based on a 14.5 km (9 mi) range test with dipole antennas.

[2]Range estimated assuming the urban noise floor is approximately 15 dB higher than rural. The actual range depends on the setup and level of interference in your location.

원문: Digi Digi XBee SX RF Modems 사용설명서(영문) · 제조사 원문 자료입니다. 사양은 제조사 사정에 따라 변경될 수 있습니다.

TS-TL-DGI-007

we measure, we calibrate, we validate.
KOLAS 국제공인교정기관 · ISO/IEC 17025
㈜테솔 · www.tessol.com TS-TL-DGI-007 9 / 44

Specification	Condition	Value
Receiver IF selectivity	Low data rate ± 250 kHz	40 dB
	Low data rate ± 500 kHz	50 dB
	Middle data rate ± 250 kHz	30 dB
	Middle data rate ± 500 kHz	40 dB
	High data rate ± 500 kHz	30 dB
	High data rate ± 1000 kHz	45 dB
Receiver RF selectivity	Below 900 MHz and above 930 MHz	> 50 dB

원문: Digi Digi XBee SX RF Modems 사용설명서(영문) · 제조사 원문 자료입니다. 사양은 제조사 사정에 따라 변경될 수 있습니다.

Hardware

Front view (RS-232/RS-485 variant) 12
Front view (Analog/Digital I/O variant) 14
Back view (all variants) 15

원문: Digi Digi XBee SX RF Modems 사용설명서(영문) · 제조사 원문 자료입니다. 사양은 제조사 사정에 따라 변경될 수 있습니다.

Front view (RS-232/RS-485 variant)

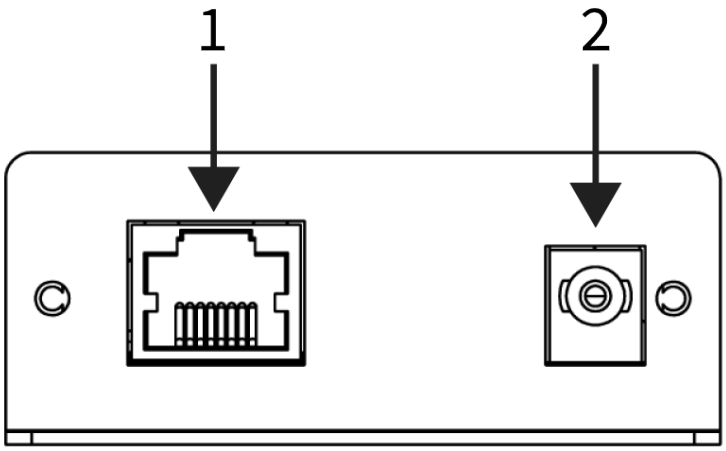

Number	Function
1	RS-232/RS-485 serial port
2	Power connector

Power connector

7 - 30 VDC power connector

RS-232/RS-485 serial port

CAUTION! The RJ-45 port is only for RS-232/RS-485 connections. If you plug in any Power over Ethernet (PoE) connection, it will damage the port.

Female RJ-45

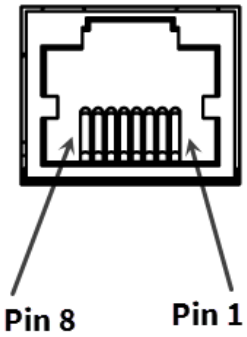

원문: Digi Digi XBee SX RF Modems 사용설명서(영문) · 제조사 원문 자료입니다. 사양은 제조사 사정에 따라 변경될 수 있습니다.

RJ-45 pin signals

The following table describes the pin signals of the RJ-45 connector. Low-asserted signals are distinguished with a horizontal line over the signal name. For more information on how to use the RS-232 and/or RS-485 functions on the modem, see Interfacing protocols.

Pin	RS-232 name	RS-232 description	RS-485 2 wire name	RS-485 2 wire description	RS-485 4 wire name	RS-485 4 wire description
1	RXD	Received data Serial data exiting the RF modem	Data-	Negative data line Serial data to and from the RF modem	TX-	Transmit negative data line Serial data sent from the RF modem
2	$\overline{\text{CTS}}$	Clear-to-Send flow control	Data+	Positive data line Serial data to and from the RF modem	TX+	Transmit positive data line Serial data sent from the RF modem
3	TXD	Transmitted data Serial data entering into the RF modem	Not used		RX+	Receive positive data line Serial data received by the RF modem
4	GND					
5	GND					
6	$\overline{\text{RTS}}$	Request-to-Send flow control	Not used		RX-	Receive negative data line Serial data received by the RF modem
7	DSR/DCD	Data-Set-Ready/Data-Carrier-Detect	Not used			
8	$\overline{\text{DTR}}$	Data-Terminal-Ready	Not used			

원문: Digi Digi XBee SX RF Modems 사용설명서(영문) · 제조사 원문 자료입니다. 사양은 제조사 사정에 따라 변경될 수 있습니다.

Front view (Analog/Digital I/O variant)

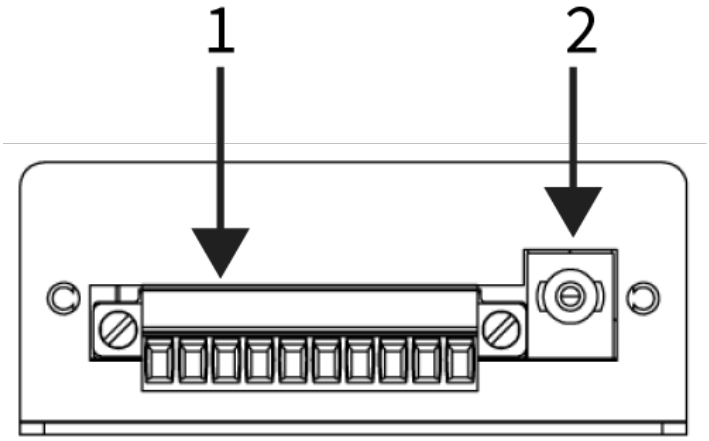

Number	Function
1	Analog and digital I/O ports
2	Power connector

Analog and Digital I/O ports

Phoenix 10-pin connector.

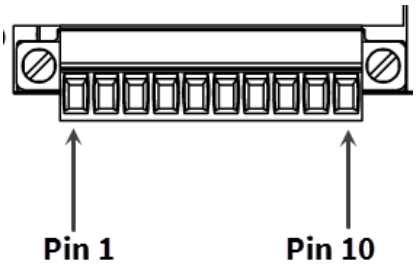

Power connector

7-30 VDC power connector.

Phoenix 10-pin connector signals

The following table describes the pin signals of the Phoenix 10-pin connector.

For more information on how to use the Analog and/or Digital functions on the modem, see Interfacing protocols.

Note We recommend disconnecting the analog and digital lines when the modem is not powered.

원문: Digi Digi XBee SX RF Modems 사용설명서(영문) · 제조사 원문 자료입니다. 사양은 제조사 사정에 따라 변경될 수 있습니다.

Pin	Name	Function
1	Analog input 1	Single-ended voltage input Current loop input Differential voltage pair 1 positive terminal
2	Analog input 2	Single-ended voltage input Current loop input Differential voltage pair 1 negative terminal
3	Analog input 3	Single-ended voltage input Current loop input Differential voltage pair 2 positive terminal
4	Analog input 4	Single-ended voltage input Current loop input Differential voltage pair 2 negative terminal
5	Digital I/O 1	Digital input Sinking driver output
6	Digital I/O 2	Digital input Sinking driver output
7	Digital I/O 3	Digital input Sinking driver output
8	Digital I/O 4	Digital input Sinking driver output
9	GND	
10	12 VDC out	+12 VDC 50 mA max power out

Back view (all variants)

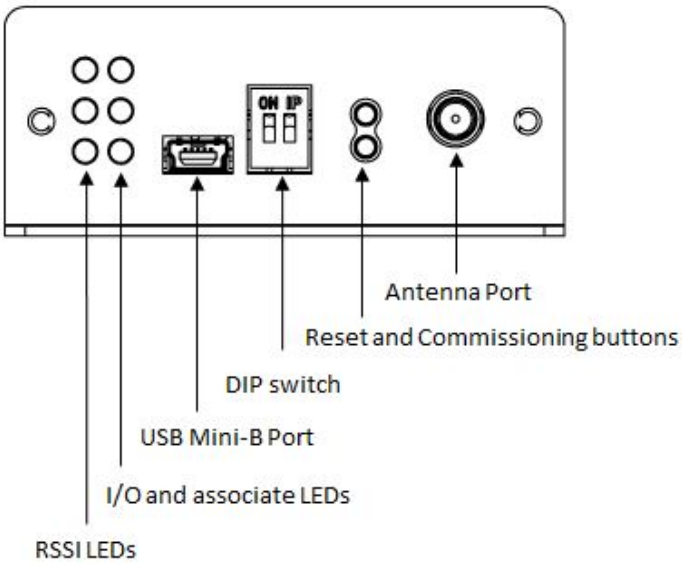

원문: Digi Digi XBee SX RF Modems 사용설명서(영문) · 제조사 원문 자료입니다. 사양은 제조사 사정에 따라 변경될 수 있습니다.

RSSI LEDs

RSSI LEDs indicate the amount of fade margin present in an active wireless link. Fade margin is the difference between the incoming signal strength and the modem's receiver sensitivity.

3 LEDs ON = Very Strong Signal (> 30 dB fade margin)

2 LEDs ON = Strong Signal (> 20 dB fade margin)

1 LED ON = Moderate Signal (> 10 dB fade margin)

0 LEDs ON = Weak Signal (< 10 dB fade margin)

I/O and associate LEDs

LEDs indicate RF modem activity as follows:

Top LED (Yellow) = Serial Data Out

Middle LED (Green) = Serial Data In

Bottom LED (Red) = Associate Indicator (blinks when associated)

USB Mini-B port

The USB Mini-B is to serve as a configuration port. Note that when the USB is plugged in, all RS-232 and RS-485 communications on the RS-232/RS-485 variant are disabled.

DIP switch

For the RS-232/RS-485 variant, these switches control the 120 Ω termination for the receiving differential pairs in the RS-485 mode. If the switch is in the up position, the RX termination is enabled.

Switch 1 is for 2-wire termination and Switch 2 is for 4-wire termination. Do not enable these switches in RS-232 mode.

For the Analog/Digital I/O variant, these switches control pull-up outputs on pins 5 and 6 of the 10-pin header. When the switch is in the up position, a 10 kΩ pull-up to 3.3 V is enabled.

If any other voltage besides 3.3V is desired, an external pull-up is required. Do not enable these switches when digital inputs are desired.

Reset and Commissioning buttons

The top button is the Reset Button. The reset button resets, or re-boots the XBee RF Modem.

The bottom button is the commissioning push button. It provides a variety of simple functions to aid in deploying devices in a network. See Commissioning Pushbutton behavior for information on how to use this.

Antenna Port

The antenna port is a 50 Ω RF signal connector for connecting to an external antenna. The connector type is RPSMA (Reverse Polarity SMA) female. The connector has threads on the outside of a barrel and a male center conductor.

원문: Digi Digi XBee SX RF Modems 사용설명서(영문) · 제조사 원문 자료입니다. 사양은 제조사 사정에 따라 변경될 수 있습니다.

Getting started with the XBee RF Modem

This section provides information on the Development Board for the XBee RF Modem and getting started instructions if you have an XBee RF Modem Development Kit.

Kit requirements 18
Identify the kit contents 18
Connect to the USB port 18
Connect to the RS-232 port 19
Configure the device using XCTU 20
Configure a network 23
Software libraries 24

원문: Digi Digi XBee SX RF Modems 사용설명서(영문) · 제조사 원문 자료입니다. 사양은 제조사 사정에 따라 변경될 수 있습니다.

Kit requirements

System requirements

The software mentioned in this guide is compatible with the following operating systems:

- Windows Vista or higher (32-bit or 64-bit versions)
- Mac OS X v10.6 and higher versions (64-bit version only)
- Linux with KDE or GNOME window managers (32-bit or 64-bit versions)

Additional requirements

This guide assumes the use of at least two XBee RF Modems. It also assumes that you ordered two accessories kits along with the modems.

Identify the kit contents

If you ordered the accessories kit, it should include the following:

Mini USB cable

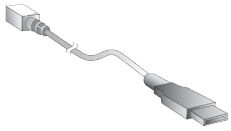

Power supply

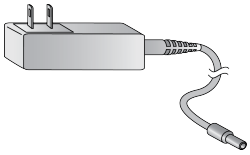

RPSMA antenna

DB9 to RJ45 adapter

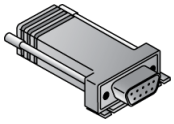

RJ45 cable

This guide describes connecting and interacting with the USB and the RS-232 ports on the XBee RF Modem. If you want to connect to the RS-485 protocol, see Interfacing protocols.

Connect to the USB port

In order to properly connect the modem for this guide:

원문: Digi Digi XBee SX RF Modems 사용설명서(영문) · 제조사 원문 자료입니다. 사양은 제조사 사정에 따라 변경될 수 있습니다.

we measure, we calibrate, we validate.
KOLAS 국제공인교정기관 · ISO/IEC 17025

1. Connect the antenna to the RPSMA connector on the XBee RF Modem.
2. Plug the 12 V power supply into the power jack.
3. Connect the mini USB cable from a PC to the USB port on the RF Modem.

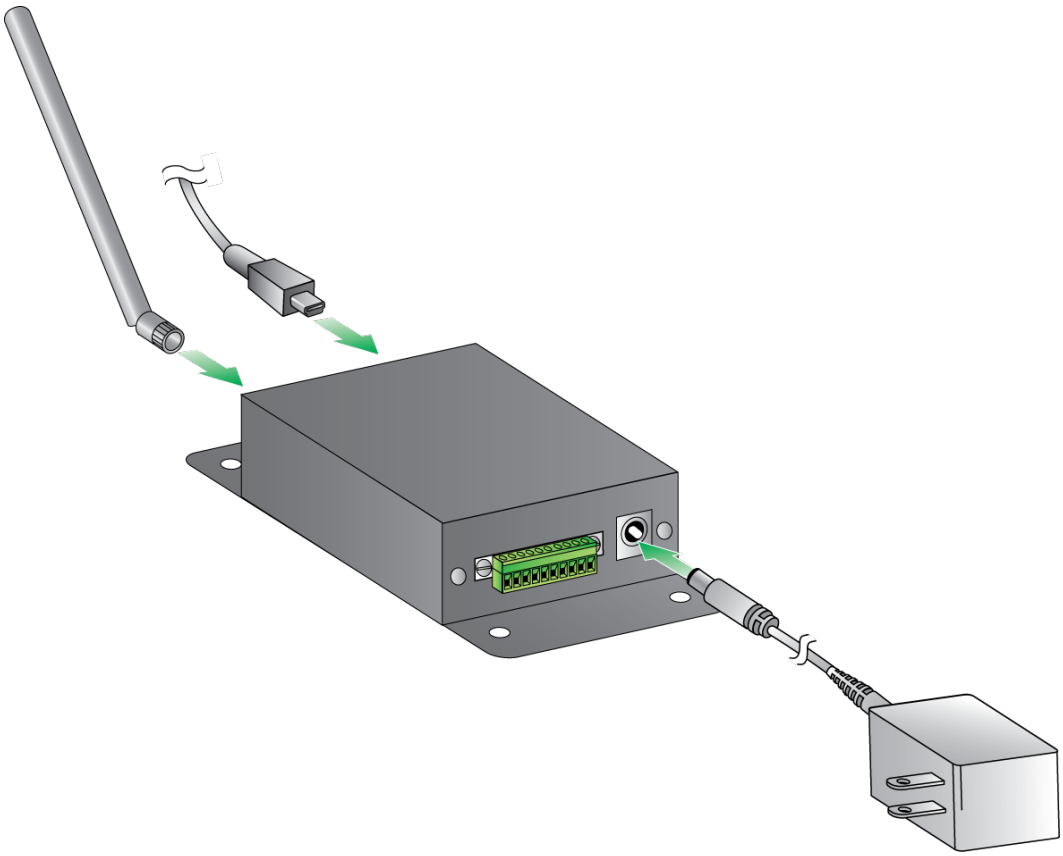

Connect to the RS-232 port

In order to properly connect the modem for this guide:

1. Connect the antenna to the RPSMA connector on the XBee RF Modem.
2. Plug the 12 V power supply into the power jack.
3. Connect the DB9 to RJ45 adapter to the serial port on your PC.
4. Connect the RJ45 cable from the adapter to the RJ45 port on the RF Modem.

원문: Digi Digi XBee SX RF Modems 사용설명서(영문) · 제조사 원문 자료입니다. 사양은 제조사 사정에 따라 변경될 수 있습니다.

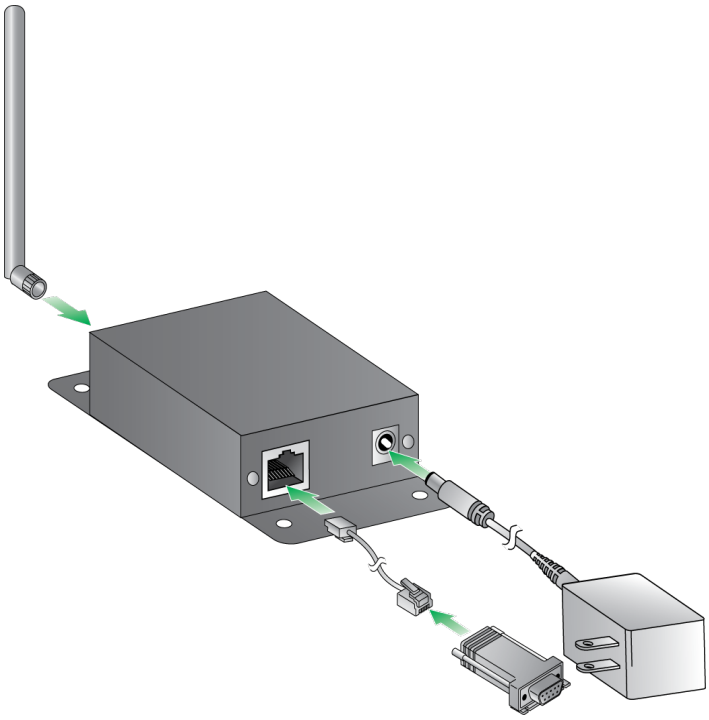

Configure the device using XCTU

XBee Configuration and Test Utility (XCTU) is a multi-platform program that enables users to interact with Digi radio frequency (RF) devices through a graphical interface. The application includes built-in tools that make it easy to set up, configure, and test Digi RF devices.

For full support of the XBee RF Modem, you must use XCTU version 6.3.0 or higher.

For instructions on downloading and using XCTU, see the XCTU User Guide.

Click **Discover devices** and follow the instructions. XCTU should discover the connected XBee RF Modems using the provided settings.

Click **Add selected devices**.The devices appear in the **Radio Modules** list. You can click a module to view and configure its individual settings. For more information on these items, see AT commands.

Discover local XBee RF Modems

XCTU can discover radio modules that are connected directly to your computer. You can use the discovery tool if you do not know the serial configuration of your XBee RF Modem, do not know the port it is connected to, or want to add multiple modules at once.

1. Click the **Discover radio modules** button on the XCTU toolbar. The **Discover radio modules** dialog box opens.

원문: Digi Digi XBee SX RF Modems 사용설명서(영문) · 제조사 원문 자료입니다. 사양은 제조사 사정에 따라 변경될 수 있습니다.

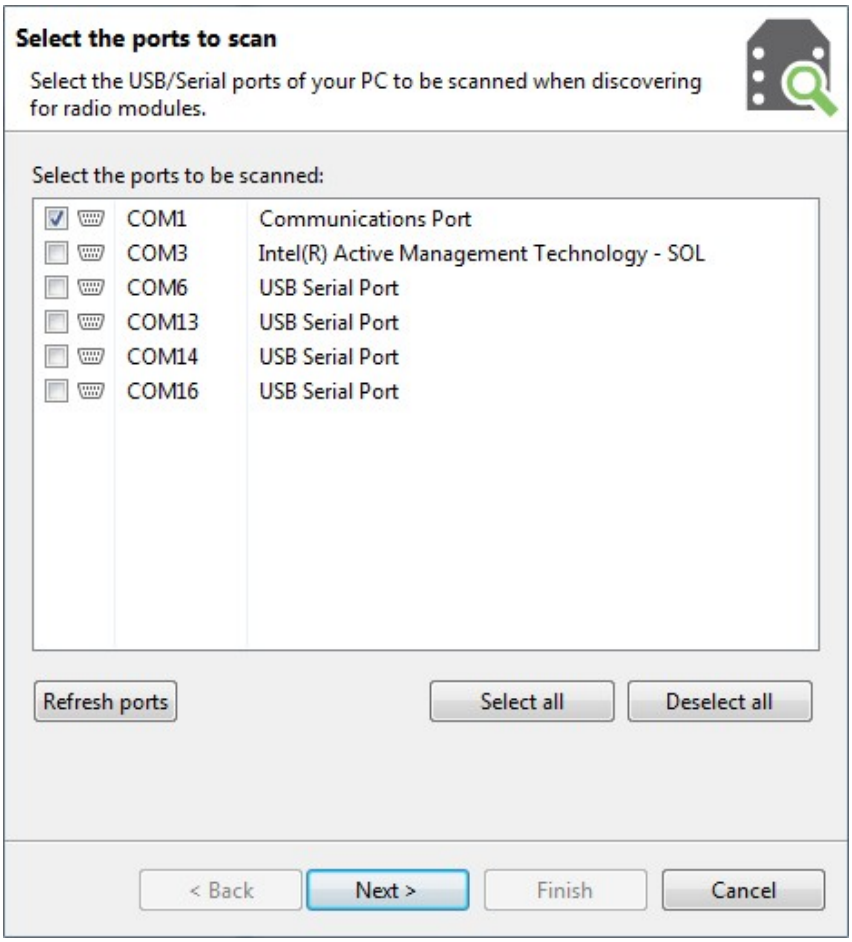

2. Select the serial ports you would like to scan for radio modules. Click **Next**.
3. Select any port parameters you would like to include in the search process.

Note XCTU displays estimated discovery time in the **Set port parameters** dialog. Adding more port parameters to the search increases discovery time.

Note If you want to use flow control, you must configure it at this point.

원문: Digi Digi XBee SX RF Modems 사용설명서(영문) · 제조사 원문 자료입니다. 사양은 제조사 사정에 따라 변경될 수 있습니다.

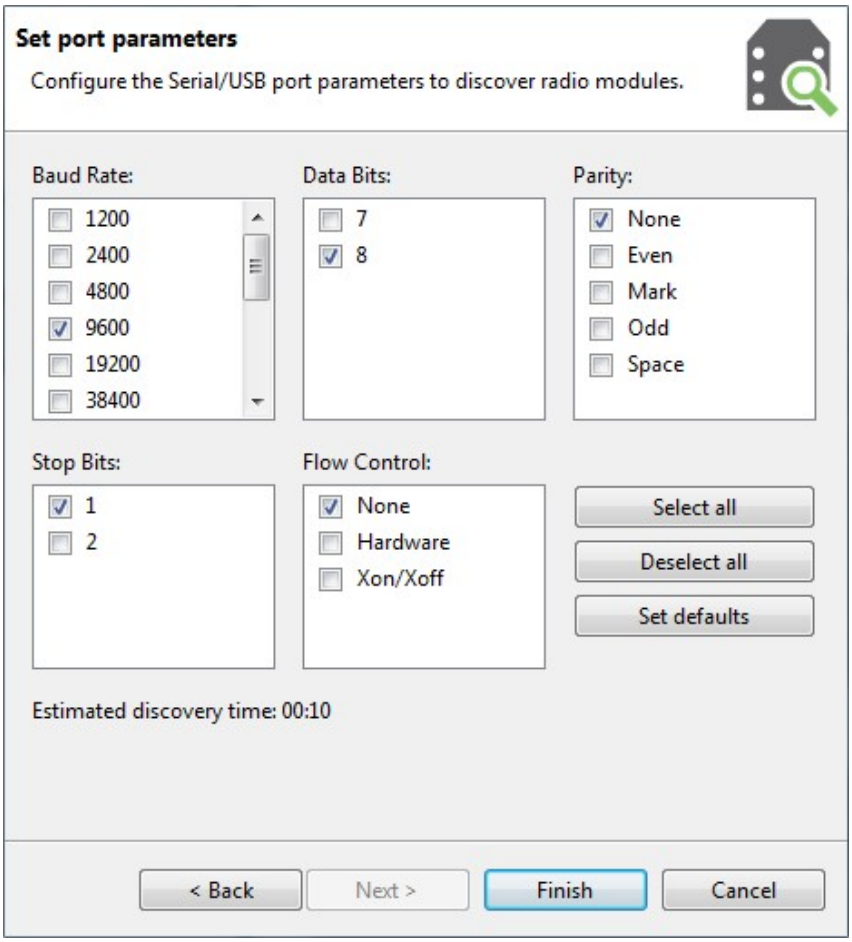

4. Click **Finish** to initiate the discovery scan.

   A new dialog opens, displaying devices found and estimated time remaining. You can click **Stop** to halt the discovery process at any time. For example, you can stop the process if the modules you were looking for are already found.

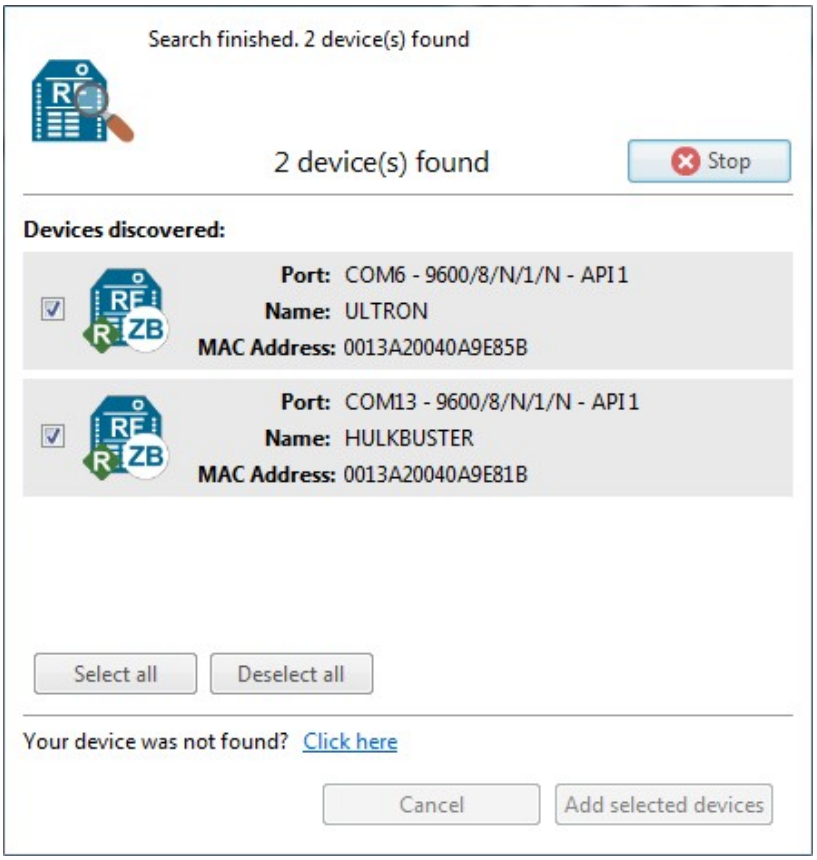

5. Select the box next to the module(s) you want to add to the device list and click **Add selected devices**. The modules appear in the device list.
6. If your module could not be found, XCTU displays the **Could not find any radio module** dialog providing possible reasons why the module could not be added.

Note The XCTU baud rate must match the device's BD parameter for proper communication. The module default is 9600 baud or 115200 baud. If 9600 baud does not work, try 115200 baud.

Configure a network

Now that the modules are in the device list, use the following steps to perform a basic network test:

1. Switch to Configuration working mode .
2. Select a radio module from the device list (Modem 1). XCTU displays the current firmware settings for that module.
3. From the configuration toolbar, click the **Read module settings** button to refresh the selected radio module's firmware settings.
4. Read the **SH** (Serial Number High) and **SL** (Serial Number Low) parameters.
5. Repeat the process for the other modem (Modem 2).

원문: Digi Digi XBee SX RF Modems 사용설명서(영문) · 제조사 원문 자료입니다. 사양은 제조사 사정에 따라 변경될 수 있습니다.

6. Select the **DH** (Destination Address High) of Modem 1 and type the **SH** of Modem 2.
7. Select the **DL** (Destination Address Low) of Modem 1 and type the **SL** of Modem 2.
8. Repeat steps 6 and 7 for Modem 2.
9. Click the **Write** button. This saves the settings to the modem.
10. Select **Serial console** from the **Tools** drop-down menu on the main XCTU toolbar. Open a serial console for each modem.
11. Use the Console log section to type messages. Type **Hello** in one of the consoles. It should appear in the other console. This shows you have a basic network connected.

Software libraries

One way to communicate with the XBee RF Modem is by using a software library. The libraries available for use with the XBee RF Modem include:

- XBee Java library
- XBee Python library

The XBee Java Library is a Java API. The package includes the XBee library, its source code and a collection of samples that help you develop Java applications to communicate with your XBee devices.

The XBee Python Library is a Python API that dramatically reduces the time to market of XBee projects developed in Python and facilitates the development of these types of applications, making it an easy process.

원문: Digi Digi XBee SX RF Modems 사용설명서(영문) · 제조사 원문 자료입니다. 사양은 제조사 사정에 따라 변경될 수 있습니다.

TS-TL-DGI-007

we measure, we calibrate, we validate.
KOLAS 국제공인교정기관 · ISO/IEC 17025

Operation

WARNING! When operating at 1 W power output, observe a minimum separation distance of 6 ft (2 m) between devices. Transmitting in close proximity of other devices can damage the device's front end.

Commissioning Pushbutton behavior 26
Interfacing protocols 26

원문: Digi Digi XBee SX RF Modems 사용설명서(영문) · 제조사 원문 자료입니다. 사양은 제조사 사정에 따라 변경될 수 있습니다.

Commissioning Pushbutton behavior

The Commissioning Pushbutton performs multiple functions to identify and configure the XBee RF Modem in an XBee network. Button presses and actions for each XBee RF modem vary as shown in the following table. Consecutive button presses must occur within two seconds of each other to perform the desired action.

The Commissioning Pushbutton functionality is enabled by default on the modem. If it has been disabled, set the **D0** command to 1 to enable it. For the Analog/Digital I/O variant, set the **P9** command to 4 along with setting the **D0** command to 1.

For additional information on these concepts and commands, see the product manual for your XBee module.

XBee-PRO SX RF Modem

Button presses	Sleep configuration and sync status	Action
1	Not configured for sleep	Immediately sends a Node Identification broadcast transmission. All devices that receive this transmission blink their Associate LED rapidly for one second. All devices in API operating mode that receive this transmission send a Node Indicator frame (0x95) out their UART.
1	Configured for asynchronous sleep	Wakes the device for 30 seconds. Immediately sends a Node Identification broadcast transmission. All devices that receive this transmission blink their Associate LED rapidly for one second. All devices in API operating mode that receive this transmission send a Node Indicator frame (0x95) out their UART.
2	Not configured for synchronous sleep	No effect
2	Configured for synchronous sleep	Causes a node configured with sleeping router nomination enabled to immediately nominate itself as the network sleep coordinator.
4	Any	Sends an **RE** command to restore device parameters to default values.

Interfacing protocols

The XBee RF Modem supports the following interfacing protocols:

- RS-232
- RS-485 (2-wire) half-duplex
- RS-485 (4-wire) full-duplex
- Analog input single-ended voltage
- Analog input current loop
- Analog input differential voltage

원문: Digi Digi XBee SX RF Modems 사용설명서(영문) · 제조사 원문 자료입니다. 사양은 제조사 사정에 따라 변경될 수 있습니다.

TS-TL-DGI-007

we measure, we calibrate, we validate.
KOLAS 국제공인교정기관 · ISO/IEC 17025

- Digital input
- Digital sinking driver output

This section introduces XBee module concepts and commands. See the product manual for your XBee module for additional information.

RS-232 operation

The RS-232/RS-485 variant of the XBee RF Modem defaults to RS-232 mode. If the modem is not set to RS-232 mode, set D2 (DIO2/AD2) to **0** (default) or **4**. D3 (DIO3/AD3) does not matter, but we recommend setting it to **0** (default). Set D7 (DIO7/CTS) to **1** (CTS enabled, default). You can use the USB port to configure RS-232 mode, but when it is plugged in the RS-232 protocol does not function.

RS-232 wiring diagrams

The following diagram shows an RS-232 DTE device wired to a DCE XBee RF Modem.

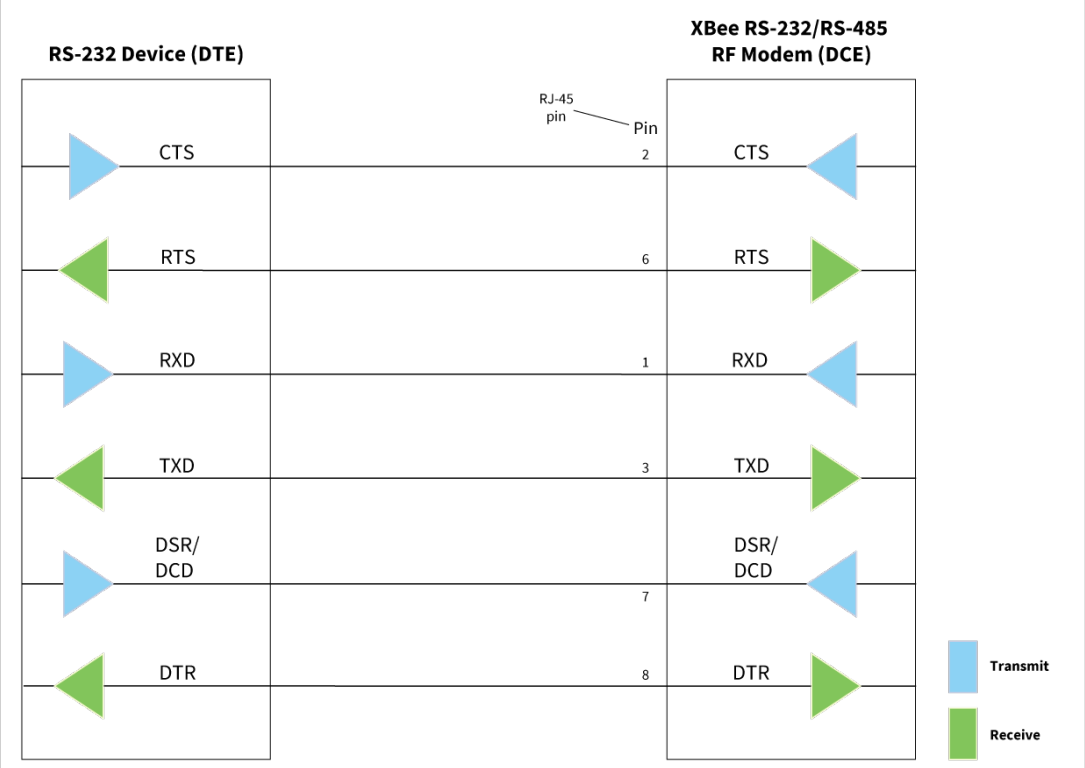

The following diagram shows a DCE XBee RF Modem wired to a DCE RS-232 device.

원문: Digi Digi XBee SX RF Modems 사용설명서(영문) · 제조사 원문 자료입니다. 사양은 제조사 사정에 따라 변경될 수 있습니다.

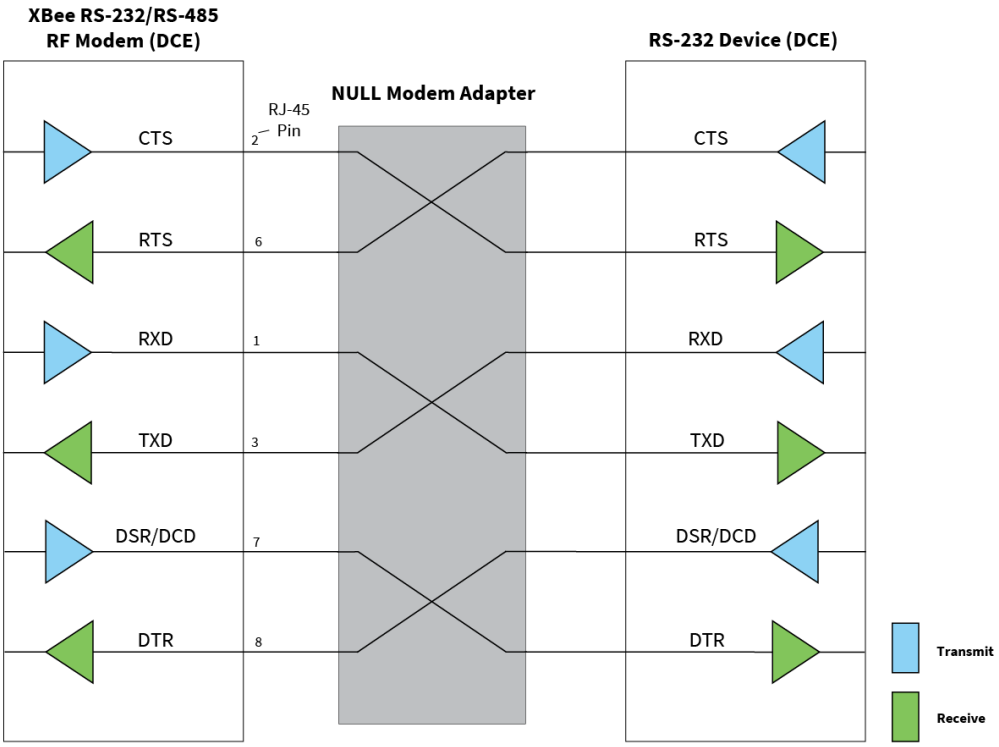

The following diagram shows a sample wireless connection: DTE <--> DCE DCE <--> DCE

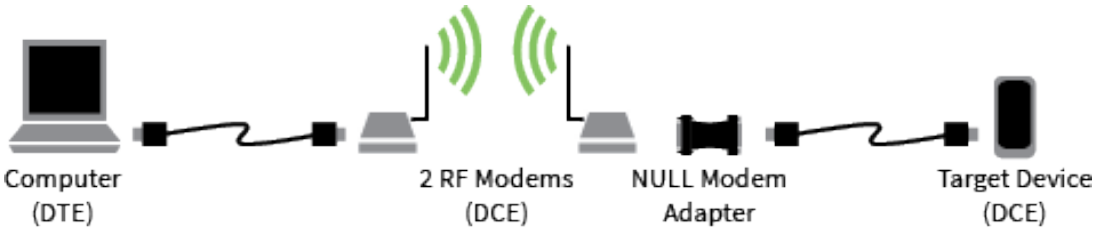

RS-485 (2-wire) half-duplex operation

To set the RS-232/RS-485 variant of the XBee RF Modem to RS-485 (2-wire) half-duplex mode, set the **D2** and **D3** commands to 5 and the **D7** command to 7. The USB port can be used to configure the RS-485 (2-wire) mode, but while it is plugged in the RS-485 (2-wire) protocol will not function.

원문: Digi Digi XBee SX RF Modems 사용설명서(영문) · 제조사 원문 자료입니다. 사양은 제조사 사정에 따라 변경될 수 있습니다.

RS-485 (2-wire) wiring diagram

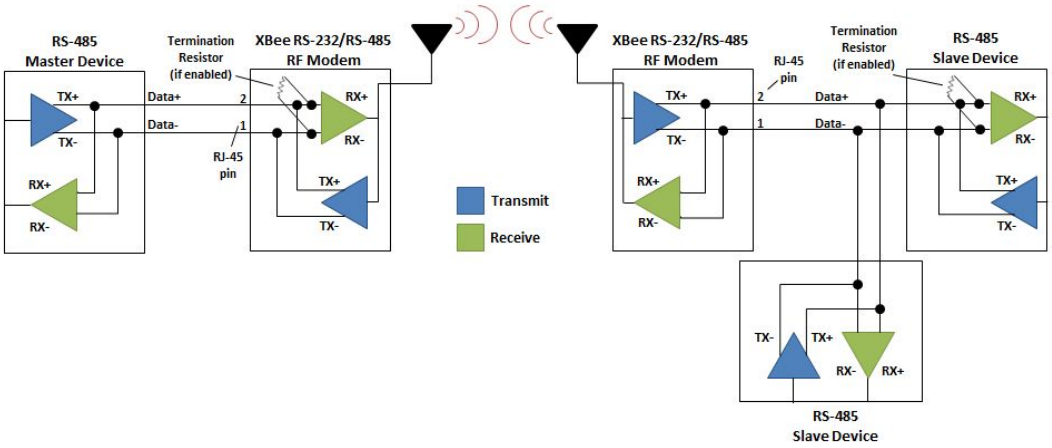

RS-485 (4-wire) full-duplex operation

To set the RS-232/RS-485 variant of the XBee RF Modem to RS-485 (4-wire) full-duplex mode, set the **D2** command to 5, the **D3** command to 4, and the **D7** command to 7. The USB port can be used to configure the RS-485 (4-wire) mode, but while it is plugged in the RS-485 (4-wire) protocol will not function. This mode can also communicate with RS-422 devices, if desired.

RS-485 (4-wire) wiring diagram

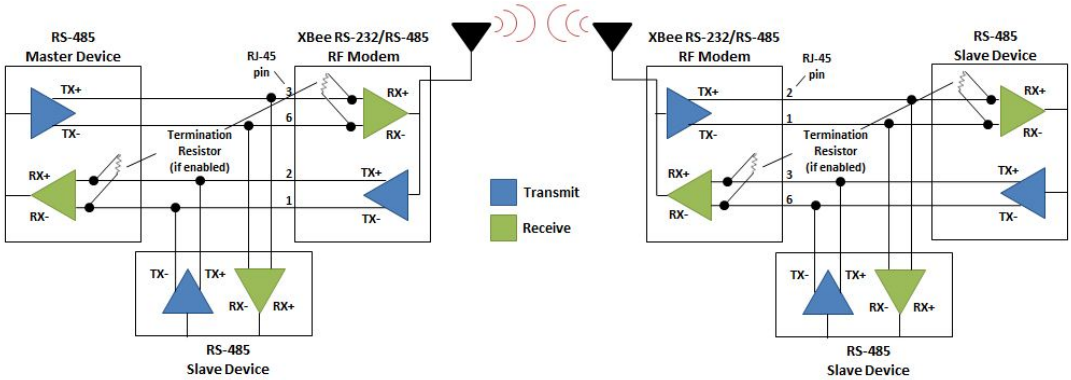

RS-485 connection guidelines

The RS-485/422 protocol provides a solution for wired communications that can tolerate high noise and push signals over long cable lengths. RS-485/422 signals can communicate as far as 4000 feet (1200 m). RS-232 signals are suitable for cable distances up to 100 feet (30.5 m).

RS-485 offers multi-drop capability in which you can connect up to 32 nodes. Use the RS-422 protocol for point-to-point communications.

To integrate the XBee RF Modem with the RS-485 protocol, we suggest the following:

원문: Digi Digi XBee SX RF Modems 사용설명서(영문) · 제조사 원문 자료입니다. 사양은 제조사 사정에 따라 변경될 수 있습니다.

we measure, we calibrate, we validate.
KOLAS 국제공인교정기관 · ISO/IEC 17025

1. Use twisted pair cabling for positive and negative data lines (Ethernet cables are good for twisted pairs).
2. For the RS-485 (2-wire) variant, select wires so that Data+ and Data- are connected to a twisted pair.
3. For the RS-485 (4-wire) variant, select wires so that TX+ and TX- are connected to a twisted pair. Likewise, select wires so that RX+ and RX- are connected to a twisted pair.

Analog input single-ended voltage operation

The Analog/Digital I/O variant of the XBee RF Modem allows up to four individual voltage inputs from 0 - 10 V. The default mode on each analog input is the single-ended voltage mode. To configure the inputs to single-ended voltage mode, use the USB port. See Configure analog and digital modes for information on how to configure the modes.

The modem scales the 0 - 10 V input to a 0 - 2.5 V range. To sample the input voltage being sent into the modem, send the **IS** command. Read the appropriate analog input hex value and use the following equation to convert that number to the input voltage:

$$V_{in} = (hex * 2500 * 13300)/(1023 * 3300), V$$

See Analog and digital I/O sampling for information on how to properly read the **IS** command.

Analog input current loop operation

The Analog/Digital I/O variant of the XBee RF Modem allows up to four individual current inputs from 4 - 20 mA. The default mode on each analog input is the single-ended voltage mode. To configure the inputs to current loop mode, use the USB port. See Configure analog and digital modes for information on how to configure the modes.

The modem converts the 4 - 20 mA input to a 0 - 2.5 V range. To sample the input current being sent into the modem, send the IS command. Read the appropriate analog input hex value and use the following equation to convert that number to the input current:

$$I_{in} = (hex * 2500)/(1023 * 120), mA$$

See Analog and digital I/O sampling for information on how to properly read the **IS** command.

Analog input differential voltage operation

The Analog/Digital I/O variant of the XBee RF modem allows up to two differential voltage inputs from -4 to 4 V. The default mode on each analog input is the single-ended voltage mode. To configure the inputs to differential voltage mode, use the USB port. See Configure analog and digital modes for information on how to configure the modes.

There are only two differential inputs possible since there are four analog input lines. The two differential inputs are the difference between Analog Input 1 and Analog Input 2 (Differential Voltage 1) and the difference between Analog Input 3 and Analog Input 4 (Differential Voltage 2). A reference voltage is used internally in the modem to calculate each differential voltage. The typical reference voltage is 1.04 V; but due to inaccuracies over temperature, using this typical reference voltage can cause larger errors. In order to reduce the error in the reading, the reference voltage can also be read for each differential voltage reading (Differential Reference 1 and Differential Reference 2 respectively).

The modem scales the -4 to 4 V difference to a 0-2.5 V range. To sample the differential voltage and reference readings, send the IS command. Differential Voltage 1 is the same number as Analog Input 1 for both the single-ended voltage mode and the current loop mode; Differential Reference 1 is the same number as Analog Input 2; Differential Voltage 2 is the same number as Analog Input 3;

원문: Digi Digi XBee SX RF Modems 사용설명서(영문) · 제조사 원문 자료입니다. 사양은 제조사 사정에 따라 변경될 수 있습니다.

TS-TL-DGI-007

we measure, we calibrate, we validate.
㈜테솔 · www.tessol.com TS-TL-DGI-007 30 / 44
KOLAS 국제공인교정기관 · ISO/IEC 17025

Differential Reference 2 is the same number as Analog Input 4. Read the appropriate hex values and use the following equation to convert the reading into the differential voltage:

$$V_{Diff} = 4 * (2500/1023 * (hex_{diff} - hex_{ref})), mV$$

See Analog and digital I/O sampling for information on how to properly read the **IS** command.

Digital input operation

The Analog/Digital I/O variant of the XBee RF Modem allows up to four individual digital inputs from 0 - 30 V. Each digital I/O line is default as a digital input. To configure the I/O lines to digital inputs, use the USB port. See Configure analog and digital modes for information on how to configure the modes.

Digital sinking driver output operation

The Analog/Digital I/O variant of the XBee RF Modem allows up to four individual digital outputs from 0 - 30 V. Each digital I/O line is default as a digital input. To configure the I/O lines to digital outputs, use the USB port. See Configure analog and digital modes for information on how to configure the modes.

The digital output is a sinking driver output. When you want a high output, use a pull-up that is stronger than 100 kΩ. For Digital I/O 1 and Digital I/O 2, you can use an internal 10 kΩ pull-up to 3.3 V if the dip switch is enabled. The other two digital I/O lines do not have internal pull-ups.

Configure analog and digital modes

The Analog/Digital I/O variant of the XBee RF Modem is capable of interacting with up to four analog inputs and four digital I/O lines. The table below lists the commands needed to set each pin to a certain mode. If one of these commands is set incorrectly, the modem is not guaranteed to work. Note that configuring one mode can impact another mode on a different pin.

For more information on how to set these commands, see the appropriate device's user guide.

Signal pin	Pin #	Function/mode	Command parameter	Command parameter value
Analog input 1	1	Single-ended voltage	**D0***	2
			P5	4
			P6	4
		Current loop	**D0***	2
			P5	4
			P6	5
		Differential voltage	**D0***	2
			D1	2
			P5	5

원문: Digi Digi XBee SX RF Modems 사용설명서(영문) · 제조사 원문 자료입니다. 사양은 제조사 사정에 따라 변경될 수 있습니다.

TS-TL-DGI-007

we measure, we calibrate, we validate.
KOLAS 국제공인교정기관 · ISO/IEC 17025
㈜테솔 · www.tessol.com TS-TL-DGI-007 31 / 44

Signal pin	Pin #	Function/mode	Command parameter	Command parameter value
Analog input 2	2	Single-ended voltage	**D1***	2
			P5	4
			P6	4
		Current loop	**D1***	2
			P5	4
			P6	5
		Differential voltage	**D0***	2
			D1*	2
			P5	5
Analog input 3	3	Single-ended voltage	**D2***	2
			P7	4
			P8	4
		Current loop	**D2***	2
			P7	4
			P8	5
		Differential voltage	**D2***	2
			D3*	2
			P7	5
Analog input 4	4	Single-ended voltage	**D3***	2
			P7	4
			P8	4
		Current loop	**D3***	2
			P7	4
			P8	5
		Differential voltage	**D2***	2
			D3*	2
			P7	5

원문: Digi Digi XBee SX RF Modems 사용설명서(영문) · 제조사 원문 자료입니다. 사양은 제조사 사정에 따라 변경될 수 있습니다.

Signal pin	Pin #	Function/mode	Command parameter	Command parameter value
Digital I/O 1	5	Input	**D4***	3
			P5	4
		Low sinking driver output	**P5**	5
		Pull-up output enable	**P5**	4
Digital I/O 2	6	Input	**D9***	3
			P6	4
		Low sinking driver output	**P6**	5
		Pull-up output enable	**P6**	4
Digital I/O 3	7	Input	**P1***	3
			P7	4
		Low sinking driver output	**P7**	5
		Pull-up output enable	**P7**	4
Digital I/O 4	8	Input	**P2***	3
			P8	4
		Low sinking driver output	**P8**	5
		Pull-up output enable	**P8**	4
* Never set these commands to 4 or 5.				

Analog and digital I/O sampling

The **IS** parameter samples the analog input and digital I/O lines on the modem. This section explains how to properly read the **IS** parameter on the Analog/Digital I/O variant of the XBee RF Modem. For a comprehensive explanation of sampling (queried sampling vs. periodic sampling), see the appropriate device's user guide.

The following table explains the different numbers that are returned when querying the **IS** command:

Field	Name	Description
1	Sample sets	Number of sample sets in the packet. Always set to 1.

원문: Digi Digi XBee SX RF Modems 사용설명서(영문) · 제조사 원문 자료입니다. 사양은 제조사 사정에 따라 변경될 수 있습니다.

Field	Name	Description
2	Digital channel mask	16-bit Hexadecimal number that indicates which digital I/O lines has sampling enabled. Each bit corresponds to one digital I/O line on the device. Below is a list of the digital input bits that are needed in this modem. The rest of the bits are not important for this modem. bit 4 = Digital Input 1 bit 9 = Digital Input 2 bit 11 = Digital Input 3 bit 12 = Digital Input 4 For example, a digital channel mask of 0x7010 means that both Digital Input 1 and Digital Input 4 are enabled as digital inputs on the module. We ignore the other two high bits because they do not matter on this modem.
3	Analog channel mask	8-bit Hexadecimal number that indicates which lines have analog inputs enabled for sampling. Each bit in the analog channel mask corresponds to one analog input channel. Below is a list of the analog input bits that are needed on this modem. bit 0 = Analog Input 1/Differential Input Voltage 1 bit 1 = Analog Input 2/Differential Reference Voltage 1 bit 2 = Analog Input 3/Differential Input Voltage 2 bit 3 = Analog Input 4/Differential Reference Voltage 2
4	Digital input states	16-bit hexadecimal number that indicates the state of each enabled digital I/O line from the Digital Channel Mask. Only the enabled digital I/O lines have any meaning. Each bit corresponds to one digital I/O line of the modem. From the example above, a digital channel mask of 0x7010 means that Digital Input 1 and Digital Input 4 are enabled. A reading of 0x5000 means that Digital Input 1 is low and Digital Input 4 is high. We ignore the other two enabled digital I/O lines because they do not matter on this modem.
5+	Analog input readings	Following the digital I/O data, each enabled analog channel returns a 16-bit hexadecimal number. This hexadecimal number will be used in the appropriate equation to convert to the analog input value on the modem. The data starts with Analog Input 1 and continues sequentially for each enabled analog input channel up to Analog Input 4.

원문: Digi Digi XBee SX RF Modems 사용설명서(영문) · 제조사 원문 자료입니다. 사양은 제조사 사정에 따라 변경될 수 있습니다.

Regulatory information

FCC (United States) 36
ISED (Innovation, Science and Economic Development Canada) 42
ACMA (Australia) 42

원문: Digi Digi XBee SX RF Modems 사용설명서(영문) · 제조사 원문 자료입니다. 사양은 제조사 사정에 따라 변경될 수 있습니다.

FCC (United States)

FCC Part 15 Class B

Radio Frequency Interface (RFI) (FCC 15.105)

This device has been tested and found to comply with the limits for Class B digital devices pursuant to Part 15 Subpart B of the FCC rules. These limits are designed to provide reasonable protection against harmful interference in a residential environment. This equipment generates, uses, and can radiate radio frequency energy, and if not installed and used in accordance with the instruction manual, may cause harmful interference to radio communications. However, there is no guarantee that interference will not occur in a particular installation. If this equipment does cause harmful interference to radio or television reception, which can be determined by turning the equipment off and on, the user is encouraged to try to correct the interference by one or more of the following measures:

- Reorient or relocate the receiving antenna.
- Increase the separation between the equipment and receiver.
- Connect the equipment into an outlet on a circuit different from that to which the receiver is connected.
- Consult the dealer or an experienced radio/TV technician for help.

Labeling requirements (FCC 15.19)

This device complies with Part 15 of FCC rules. Operation is subject to the following two conditions: (1) this device may not cause harmful interference, and (2) this device must accept any interference received, including interference that may cause undesired operation.

Modifications (FCC 15.21)

Changes or modifications to this equipment not expressly approved by Digi may void the user's authority to operate this equipment.

원문: Digi Digi XBee SX RF Modems 사용설명서(영문) · 제조사 원문 자료입니다. 사양은 제조사 사정에 따라 변경될 수 있습니다.

XBee RF Modem approved antennas (30 dBm maximum RF power)

The following tables cover the antennas that are approved for use with the XBee-PRO SX RF Modem. If applicable, the tables show the required cable loss between the device and the antenna.

Digi does not carry all of these antenna variants. Contact Digi Sales for available antennas.

Dipole antennas

All antenna part numbers followed by an asterisk (*) are not available from Digi. Consult with an antenna manufacturer for an equivalent option.

Part number	Type	Connector	Gain	Application
A09-HSM-7 [1]	Straight half-wave	RPSMA	2.1 dBi	Fixed / Mobile
A09-HASM-675	Articulated half-wave	RPSMA	2.1 dBi	Fixed / Mobile
A09-HABMM-P5I	Swivel half wave with 5" pigtail	MMCX	2.1 dBi	Fixed / Mobile
A09-HBMM-P5I	Straight half-wave with 6" pigtail	MMCX	2.1 dBi	Fixed / Mobile
A09-HASM-7*	Articulated half-wave	RPSMA	2.1 dBi	Fixed
A09-HRSM*	Right angle half-wave	RPSMA	2.1 dBi	Fixed
A09-HG*	Glass mounted half-wave	RPSMA	2.1 dBi	Fixed
A09-HATM*	Articulated half-wave	RPTNC	2.1 dBi	Fixed
A09-H*	Half-wave dipole	RPSMA	2.1 dBi	Fixed

Yagi antennas

All antenna part numbers followed by an asterisk (*) are not available from Digi. Consult with an antenna manufacturer for an equivalent option.

[1] Installers should apply additional torque to screw on the antenna.

원문: Digi Digi XBee SX RF Modems 사용설명서(영문) · 제조사 원문 자료입니다. 사양은 제조사 사정에 따라 변경될 수 있습니다.

Part Number	Type	Gain	Connector	Required antenna cable loss	Application
A09-Y6NF*	2 element Yagi	6.1 dBi	N	2.0 dB	Fixed/Mobile
A09-Y7NF*	3 element Yagi	7.1 dBi	N	3.0 dB	Fixed/Mobile
A09-Y8NF	4 element Yagi	8.1 dBi	N	4.0 dB	Fixed/Mobile
A09-Y9NF*	4 element Yagi	9.1 dBi	N	5.0 dB	Fixed/Mobile
A09-Y10NF*	5 element Yagi	10.1 dBi	N	6.0 dB	Fixed/Mobile
A09-Y11NF	6 element Yagi	11.1 dBi	N	7.0 dB	Fixed/Mobile
A09-Y12NF*	7 element Yagi	12.1 dBi	N	8.0 dB	Fixed/Mobile
A09-Y13NF*	9 element Yagi	13.1 dBi	N	9.0 dB	Fixed/Mobile
A09-Y14NF*	14 element Yagi	14.0 dBi	N	9.9 dB	Fixed/Mobile
A09-Y6TM*	2 element Yagi	6.1 dBi	RPTNC	2.0 dB	Fixed/Mobile
A09-Y7TM*	3 element Yagi	7.1 dBi	RPTNC	3.0 dB	Fixed/Mobile
A09-Y8TM*	4 element Yagi	8.1 dBi	RPTNC	4.0 dB	Fixed/Mobile
A09-Y9TM*	4 element Yagi	9.1 dBi	RPTNC	5.0 dB	Fixed/Mobile
A09-Y10TM-P10I	5 element Yagi	10.1 dBi	RPTNC	6.0 dB	Fixed/Mobile
A09-Y11TM*	6 element Yagi	11.1 dBi	RPTNC	7.0 dB	Fixed/Mobile
A09-Y12TM*	7 element Yagi	12.1 dBi	RPTNC	8.0 dB	Fixed/Mobile
A09-Y13TM*	9 element Yagi	13.1 dBi	RPTNC	9.0 dB	Fixed/Mobile
A09-Y14TM*	14 element Yagi	14.0 dBi	RPTNC	9.9 dB	Fixed/Mobile

Omni-directional base station antennas

All antenna part numbers followed by an asterisk (*) are not available from Digi. Consult with an antenna manufacturer for an equivalent option.

원문: Digi Digi XBee SX RF Modems 사용설명서(영문) · 제조사 원문 자료입니다. 사양은 제조사 사정에 따라 변경될 수 있습니다.

Part Number	Type	Gain	Connector	Required antenna cable loss	Application
A09-F0NF*	Fiberglass Base Station	0 dBi	N	-	Fixed
A09-F1NF*	Fiberglass Base Station	1.0 dBi	N	-	Fixed
A09-F2NF-M*	Fiberglass Base Station	2.1 dBi	N	-	Fixed
A09-F3NF*	Fiberglass Base Station	3.1 dBi	N	-	Fixed
A09-F4NF*	Fiberglass Base Station	4.1 dBi	N	-	Fixed
A09-F5NF-M	Fiberglass Base Station	5.1 dBi	N	-	Fixed
A09-F6NF*	Fiberglass Base Station	6.1 dBi	N	0.9 dB	Fixed
A09-F7NF*	Fiberglass Base Station	7.1 dBi	N	1.9 dB	Fixed
A09-F8NF-M	Fiberglass Base Station	8.1 dBi	N	2.9 dB	Fixed
A09-F0SM*	Fiberglass Base Station	0 dBi	RPSMA	-	Fixed
A09-F1SM*	Fiberglass Base Station	1.0 dBi	RPSMA	-	Fixed
A09-F2SM*	Fiberglass Base Station	2.1 dBi	RPSMA	-	Fixed
A09-F3SM*	Fiberglass Base Station	3.1 dBi	RPSMA	-	Fixed
A09-F4SM*	Fiberglass Base Station	4.1 dBi	RPSMA	-	Fixed
A09-F5SM*	Fiberglass Base Station	5.1 dBi	RPSMA	-	Fixed
A09-F6SM*	Fiberglass Base Station	6.1 dBi	RPSMA	0.9 dB	Fixed
A09-F7SM*	Fiberglass Base Station	7.1 dBi	RPSMA	1.9 dB	Fixed
A09-F8SM*	Fiberglass Base Station	8.1 dBi	RPSMA	2.9 dB	Fixed
A09-F0TM*	Fiberglass Base Station	0 dBi	RPTNC	-	Fixed
A09-F1TM*	Fiberglass Base Station	1.0 dBi	RPTNC	-	Fixed
A09-F2TM*	Fiberglass Base Station	2.1 dBi	RPTNC	-	Fixed

원문: Digi Digi XBee SX RF Modems 사용설명서(영문) · 제조사 원문 자료입니다. 사양은 제조사 사정에 따라 변경될 수 있습니다.

Part Number	Type	Gain	Connector	Required antenna cable loss	Application
A09-F3TM*	Fiberglass Base Station	3.1 dBi	RPTNC	-	Fixed
A09-F4TM*	Fiberglass Base Station	4.1 dBi	RPTNC	-	Fixed
A09-F5TM*	Fiberglass Base Station	5.1 dBi	RPTNC	-	Fixed
A09-F6TM*	Fiberglass Base Station	6.1 dBi	RPTNC	0.9 dB	Fixed
A09-F7TM*	Fiberglass Base Station	7.1 dBi	RPTNC	1.9 dB	Fixed
A09-F8TM*	Fiberglass Base Station	8.1 dBi	RPTNC	2.9 dB	Fixed
A09-W7*	Wire Base Station	7.1 dBi	RPN	1.9 dB	Fixed
A09-W7SM*	Wire Base Station	7.1 dBi	RPSMA	1.9 dB	Fixed
A09-W7TM*	Wire Base Station	7.1 dBi	RPTNC	1.9 dB	Fixed

Dome antennas

All antenna part numbers followed by an asterisk (*) are not available from Digi. Consult with an antenna manufacturer for an equivalent option.

Part Number	Type	Gain	Connector	Required antenna cable loss	Application
A09-D3PNF*	Omnidirectional permanent mount	3.0 dBi	N	0.4 dB	Fixed/Mobile
A09-D3NF*	Omnidirectional magnetic mount	3.0 dBi	N	0.4 dB	Fixed/Mobile
A09-D3PTM*	Omnidirectional permanent mount	3.0 dBi	RPTNC	0.4 dB	Fixed/Mobile
A09-D3PSM*	Omnidirectional permanent mount	3.0 dBi	RPSMA	0.4 dB	Fixed/Mobile

Monopole antennas

All antenna part numbers followed by an asterisk (*) are not available from Digi. Consult with an antenna manufacturer for an equivalent option.

원문: Digi Digi XBee SX RF Modems 사용설명서(영문) · 제조사 원문 자료입니다. 사양은 제조사 사정에 따라 변경될 수 있습니다.

Part Number	Type	Gain	Connector	Required antenna cable loss	Application
A09-QRAMM	3" Quarter wave wire	2.1 dBi	MMCX	-	Fixed/Mobile
A09-QRSM-2.1*	Quarter wave 2.1" right angle	3.3 dBi	RPSMA	0.4 dB	Fixed/Mobile
A09-QW*	Quarter wave wire	1.9 dBi	Permanent	-	Fixed/Mobile
A09-QSM-3*	Quarter wave straight	1.9 dBi	RPSMA	-	Fixed/Mobile
A09-QSM-3H*	Heavy duty quarter wave straight	1.9 dBi	RPSMA	-	Fixed/Mobile
A09-QBMM-P6I*	Quarter wave w/ 6" pigtail	1.9 dBi	MMCX	-	Fixed/Mobile
A09-QHSM-2*	2" straight	1.9 dBi	RPSMA	-	Fixed/Mobile
A09-QHRSM-2*	2" right angle	1.9 dBi	RPSMA	-	Fixed/Mobile
A09-QHRSM-170*	1.7" right angle	1.9 dBi	RPSMA	-	Fixed/Mobile
A09-QRSM-380*	3.8" right angle	1.9 dBi	RPSMA	-	Fixed/Mobile
A09-QAPM-520*	5.2" articulated screw mount	1.9 dBi	Permanent	-	Fixed/Mobile
A09-QSPM-3*	3" straight screw mount	1.9 dBi	Permanent	-	Fixed/Mobile
A09-QAPM-3*	3" articulated screw mount	1.9 dBi	Permanent	-	Fixed/Mobile
A09-QAPM-3H*	3" articulated screw mount	1.9 dBi	Permanent	-	Fixed/Mobile

원문: Digi Digi XBee SX RF Modems 사용설명서(영문) · 제조사 원문 자료입니다. 사양은 제조사 사정에 따라 변경될 수 있습니다.

ISED (Innovation, Science and Economic Development Canada)

This device complies with Industry Canada licence-exempt RSS standard(s). Operation is subject to the following two conditions: (1) this device may not cause interference, and (2) this device must accept any interference, including interference that may cause undesired operation of the device.

Le présent appareil est conforme aux CNR d'Industrie Canada applicables aux appareils radio exempts de licence. L'exploitation est autorisée aux deux conditions suivantes: (1) l'appareil ne doit pas produire de brouillage, et (2) l'utilisateur de l'appareil doit accepter tout brouillage radioélectrique subi, même si le brouillage est susceptible d'en compromettre le fonctionnement.

RF Exposure

CAUTION! This equipment is approved for mobile and base station transmitting devices only. Antenna(s) used for this transmitter must be installed to provide a separation distance of at least 34 cm from all persons and must not be co-located or operating in conjunction with any other antenna or transmitter.

Attention Cet équipement est approuvé pour la mobile et la station base dispositifs d'émission seulement. Antenne(s) utilisé pour cet émetteur doit être installé pour fournir une distance de séparation d'au moins 34 cm à partir de toutes les personnes et ne doit pas être situé ou fonctionner en conjonction avec tout autre antenne ou émetteur.

ACMA (Australia)

Power requirements

Regulations in Australia stipulate a maximum of 30 dBm EIRP (Effective Isotropic Radiated Power). The EIRP equals the sum (in dBm) of power output, antenna gain and cable loss and cannot not exceed 30 dBm.

The EIRP formula for Australia is:

power output + antenna gain - cable loss <= 30 dBm

Note The maximum EIRP for the FCC (United States) and IC (Canada) is 36 dBm.

These modems comply with requirements to be used in end products in Australia. All products with EMC and radio communications must have a registered RCM mark. Registration to use the compliance mark will only be accepted from Australian manufacturers or importers, or their agent, in Australia. In order to have a RCM mark on an end product, a company must comply with a or b below:

a. have a company presence in Australia.
b. have a company/distributor/agent in Australia that will sponsor the import of the end product.

Contact Digi for questions related to locating a contact in Australia.

원문: Digi Digi XBee SX RF Modems 사용설명서(영문) · 제조사 원문 자료입니다. 사양은 제조사 사정에 따라 변경될 수 있습니다.

we measure, we calibrate, we validate.
㈜테솔 · www.tessol.com TS-TL-DGI-007 42 / 44
KOLAS 국제공인교정기관 · ISO/IEC 17025

TS-TL-DGI-007

Troubleshooting

This section contains troubleshooting steps for the XBee RF Modem.

Reset the XBee RF Modem 44

원문: Digi Digi XBee SX RF Modems 사용설명서(영문) · 제조사 원문 자료입니다. 사양은 제조사 사정에 따라 변경될 수 있습니다.

Reset the XBee RF Modem

If the XBee RF Modem loses its connection to the computer, you can attempt a reset.

Condition

The XBee RF Modem loses connection to the computer.

Solution

Each XBee RF Modem has a reset button. The following image shows the location of the reset button as **1**, the top button.

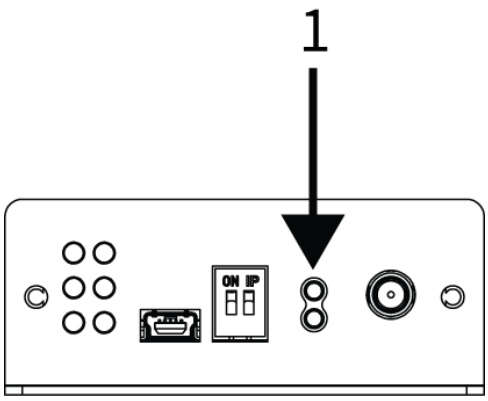

Press this button to reset the module. However, this will not clear any changes written to the module. You can also press the reset button to reset the COM port for the board.

To reconnect the module after pressing the reset button:

1. In XCTU, click the **Consoles working mode** button on the toolbar .
2. Click the **Close** button

.
3. Click the **Open** button to restore the connection

.

원문: Digi Digi XBee SX RF Modems 사용설명서(영문) · 제조사 원문 자료입니다. 사양은 제조사 사정에 따라 변경될 수 있습니다.