2100

Temperature Controller

User Manual

PN 3729079
November 2013
© 2013 Fluke Corporation. All rights reserved. Specifications are subject to change without notice.
All product names are trademarks of their respective companies.

원문: Fluke Calibration 3125 2100 설명서 · 제조사 원문 자료입니다. 사양은 제조사 사정에 따라 변경될 수 있습니다.

LIMITED WARRANTY AND LIMITATION OF LIABILITY

Each Fluke product is warranted to be free from defects in material and workmanship under normal use and service. The warranty period is two years and begins on the date of shipment. Parts, product repairs, and services are warranted for 90 days. This warranty extends only to the original buyer or end-user customer of a Fluke authorized reseller, and does not apply to fuses, disposable batteries, or to any product which, in Fluke's opinion, has been misused, altered, neglected, contaminated, or damaged by accident or abnormal conditions of operation or handling. Fluke warrants that software will operate substantially in accordance with its functional specifications for 90 days and that it has been properly recorded on non-defective media. Fluke does not warrant that software will be error free or operate without interruption.

Fluke authorized resellers shall extend this warranty on new and unused products to end-user customers only but have no authority to extend a greater or different warranty on behalf of Fluke. Warranty support is available only if product is purchased through a Fluke authorized sales outlet or Buyer has paid the applicable international price. Fluke reserves the right to invoice Buyer for importation costs of repair/replacement parts when product purchased in one country is submitted for repair in another country.

Fluke's warranty obligation is limited, at Fluke's option, to refund of the purchase price, free of charge repair, or replacement of a defective product which is returned to a Fluke authorized service center within the warranty period.

To obtain warranty service, contact your nearest Fluke authorized service center to obtain return authorization information, then send the product to that service center, with a description of the difficulty, postage and insurance prepaid (FOB Destination). Fluke assumes no risk for damage in transit. Following warranty repair, the product will be returned to Buyer, transportation prepaid (FOB Destination). If Fluke determines that failure was caused by neglect, misuse, contamination, alteration, accident, or abnormal condition of operation or handling, including overvoltage failures caused by use outside the product's specified rating, or normal wear and tear of mechanical components, Fluke will provide an estimate of repair costs and obtain authorization before commencing the work. Following repair, the product will be returned to the Buyer transportation prepaid and the Buyer will be billed for the repair and return transportation charges (FOB Shipping Point).

THIS WARRANTY IS BUYER'S SOLE AND EXCLUSIVE REMEDY AND IS IN LIEU OF ALL OTHER WARRANTIES, EXPRESS OR IMPLIED, INCLUDING BUT NOT LIMITED TO ANY IMPLIED WARRANTY OF MERCHANTABILITY OR FITNESS FOR A PARTICULAR PURPOSE. FLUKE SHALL NOT BE LIABLE FOR ANY SPECIAL, INDIRECT, INCIDENTAL OR CONSEQUENTIAL DAMAGES OR LOSSES, INCLUDING LOSS OF DATA, ARISING FROM ANY CAUSE OR THEORY.

Since some countries or states do not allow limitation of the term of an implied warranty, or exclusion or limitation of incidental or consequential damages, the limitations and exclusions of this warranty may not apply to every buyer. If any provision of this Warranty is held invalid or unenforceable by a court or other decision-maker of competent jurisdiction, such holding will not affect the validity or enforceability of any other provision.

Fluke Corporation
P.O. Box 9090
Everett, WA 98206-9090
U.S.A.

Fluke Europe B.V.
P.O. Box 1186
5602 BD Eindhoven
The Netherlands

11/99

원문: Fluke Calibration 3125 2100 설명서 · 제조사 원문 자료입니다. 사양은 제조사 사정에 따라 변경될 수 있습니다.

Table of Contents

Chapter	Title	Page
1	**Before You Start**	**1-1**
1.1	Introduction	1-1
1.2	Symbols Used	1-2
1.3	Safety Information	1-2
1.3.1	WARNINGS	1-3
1.3.2	CAUTIONS	1-5
1.4	Authorized Service Centers	1-7
Specifications and Environmental Conditions		**2-1**
2.1	Specifications	2-1
2.2	Environmental Conditions	2-2
Quick Start		**3-1**
3.1	Unpacking	3-1
3.2	Set Up	3-2
3.3	Setting the Temperature	3-2
Installation		**4-1**
4.1	Setup	4-1
4.2	Heater/Stirrer	4-1
4.3	Control Probe	4-2
4.4	Thermocouple	4-3
4.5	Power	4-3
4.6	Fuses	4-4
Parts and Controls		**5-1**
5.1	Control System	5-1
5.2	Temperature Controller	5-1
5.3	Front Panel	5-2
5.4	Rear Panel	5-3
Controller Operation		**6-1**

원문: Fluke Calibration 3125 2100 설명서 · 제조사 원문 자료입니다. 사양은 제조사 사정에 따라 변경될 수 있습니다.

6.1 Process temperature 6-1
6.2 Reset Cutout 6-1
6.3 Temperature Set-point 6-3
6.3.1 Programmable Set-points 6-3
6.3.2 Set-point Value 6-4
6.3.3 Set-point Vernier 6-4
6.4 Temperature Scale Units 6-5
6.5 Secondary Menu 6-6
6.6 Heater Power 6-6
6.7 Proportional Band 6-6
6.8 Cutout 6-8
6.9 Controller Configuration 6-9
6.10 Probe Parameters RTD Sensor 6-9
6.10.1 R0 6-10
6.10.2 ALPHA 6-10
6.11 Probe Parameters Thermistor Sensor 6-10
6.11.1 D0 6-10
6.11.2 DG 6-10
6.12 Operating Parameters 6-10
6.12.1 Cutout Reset Mode 6-10
6.13 Serial Interface Parameters 6-11
6.13.1 Baud Rate 6-11
6.13.2 Sample Period 6-12
6.13.3 Duplex Mode 6-12
6.13.4 Linefeed 6-12
6.14 IEEE-488 Parameters 6-13
6.14.1 IEEE-488 Address 6-13
6.15 Calibration Parameters 6-13
6.15.1 CTO 6-14
6.15.2 CO and CG 6-14
6.15.3 H and L 6-14
6.16 Operation Summary 6-14

Digital Communication Interface 7-1

7.1 Serial Communications 7-1
7.1.1 Wiring 7-2
7.1.2 Setup 7-2
7.1.2.1 Baud Rate 7-2
7.1.2.2 Sample Period 7-2
7.1.2.3 Duplex Mode 7-3
7.1.2.4 Linefeed 7-3
7.1.3 Serial Operation 7-3
7.2 IEEE-488 Communication (optional) 7-3
7.2.1 Setup and Address Selection 7-3
7.2.2 IEEE-488 Operation 7-4
7.3 Interface Commands 7-4

Calibration Procedure 8-1

8.1 RTD Probe Calibration 8-1
8.1.1 Calibration Points 8-1
8.1.2 Measuring the Set-point Error 8-2
8.1.3 Computing R0 and ALPHA 8-2
8.2 Calibration Example 8-3
8.3 Thermistor Probe Calibration 8-3

원문: Fluke Calibration 3125 2100 설명서 · 제조사 원문 자료입니다. 사양은 제조사 사정에 따라 변경될 수 있습니다.

Contents (continued)

8.3.1 Calibration Points 8-3
8.3.2 Measuring the Set-point Error 8-4
8.3.3 Computing DO and DG 8-5
8.3.4 Calibration Example 8-5

Maintenance 9-1

9.1 Maintenance 9-1

Troubleshooting 10-1

10.1 Troubleshooting 10-1
10.2 Comments 10-5
10.2.1 EMC Directive 10-5
10.2.2 Low Voltage Directive (Safety) 10-5

원문: Fluke Calibration 3125 2100 설명서 · 제조사 원문 자료입니다. 사양은 제조사 사정에 따라 변경될 수 있습니다.

원문: Fluke Calibration 3125 2100 설명서 · 제조사 원문 자료입니다. 사양은 제조사 사정에 따라 변경될 수 있습니다.

List of Tables

Table	Title	Page
1.	International Electrical Symbols	1-2
2.	Specifications	2-1
3.	2100 Controller Communications Commands	7-5

원문: Fluke Calibration 3125 2100 설명서 · 제조사 원문 자료입니다. 사양은 제조사 사정에 따라 변경될 수 있습니다.

원문: Fluke Calibration 3125 2100 설명서 · 제조사 원문 자료입니다. 사양은 제조사 사정에 따라 변경될 수 있습니다.

List of Figures

Figure	Title	Page
1.	Controller to Heater Wiring	4-2
2.	RTD Probe Wiring	4-3
3.	Cutout Probe Connections	4-3
4.	Front Panel Features	5-3
5.	Back Panel Features	5-4
6.	Controller Operation Flowchart	6-2
7.	System Temperature Fluctuations at Various Proportional Band Settings	6-7
8.	Serial Interface Cable Wiring	7-2
9.	Calibration Example — Platinum RTD Probe	8-4
10.	Calibration Example — Thermistor Probe	8-6

원문: Fluke Calibration 3125 2100 설명서 · 제조사 원문 자료입니다. 사양은 제조사 사정에 따라 변경될 수 있습니다.

원문: Fluke Calibration 3125 2100 설명서 · 제조사 원문 자료입니다. 사양은 제조사 사정에 따라 변경될 수 있습니다.

Chapter 1
Before You Start

1.1 Introduction

The Fluke Calibration 2100 is a solid state temperature controller. It is specifically designed to control the temperature of fluid baths but is well suited for many other applications as well. The unique combination of analog and digital electronic circuitry provides exceptional accuracy and stability together with ease of operation and programmability.

Temperature sensing is done with a 4-wire 100 ohm platinum resistance probe (thermistor probe optionally available) which plugs into the back of the controller. To maintain a constant temperature the controller adjusts the pulses of power supplied to the heater by means of a solid-state relay. The maximum current rating of the controller is 10 amps. Any combination of heater or stirrer may be connected to the controller as long as the combined current does not exceed 10 amps.

The 2100 controller can be easily programmed via the four-button front panel or by the optional serial interface. Programming allows the user to set the control temperature, units °C or °F, the proportional band, and the calibration variables. The process or actual temperature is continuously displayed on a bright green LED panel. The percent heating power may also be monitored.

An added safety device, the over-temperature cutout, is also programmable. This built in feature protects the system from fault conditions causing excessive temperatures by disabling the heater if the temperature sensed by a separate thermocouple probe exceeds the cutout set-point.

Before using the 2100 controller, you should understand the proper setup and operation.

원문: Fluke Calibration 3125 2100 설명서 · 제조사 원문 자료입니다. 사양은 제조사 사정에 따라 변경될 수 있습니다.

1.2 Symbols Used

Table 1 lists the International Electrical Symbols. Some or all of these symbols may be used on the instrument or in this manual.

Table 1. International Electrical Symbols

Symbol	Description
~	AC (Alternating Current)
≂	AC-DC
	Battery
CE	CE Complies with European Union Directives
⎓	DC
	Double Insulated
	Electric Shock
	Fuse
	PE Ground
	Hot Surface (Burn Hazard)
	Read the User's Manual (Important Information)
O	Off
I	On
NRTL	Canadian Standards Association
CATII	OVERVOLTAGE (Installation) CATEGORY II, Pollution Degree 2 per IEC1010-1 refers to the level of Impulse Withstand Voltage protection provided. Equipment of OVERVOLTAGE CATEGORY II is energy-consuming equipment to be supplied from the fixed installation. Examples include household, office, and laboratory appliances.
N10140	C-TIC Australian EMC Mark
	The European Waste Electrical and Electronic Equipment (WEEE) Directive (2002/96/EC) mark

1.3 Safety Information

Use this instrument only as specified in this manual. Otherwise, the protection provided by the instrument may be impaired.

The following definitions apply to the terms "Warning" and "Caution".

- "WARNING" identifies conditions and actions that may pose hazards to the user.
- "CAUTION" identifies conditions and actions that may damage the instrument being used.

원문: Fluke Calibration 3125 2100 설명서 · 제조사 원문 자료입니다. 사양은 제조사 사정에 따라 변경될 수 있습니다.

1.3.1 WARNINGS

⚠ WARNINGS

To avoid personal injury, follow these guidelines.

GENERAL

- **The instrument does not come with a system cutout, unless purchased as an option. If not purchased with the controller, the user should provide a bi-metal cutout or other safety device for the system. A cutout device compatible with the controller can be purchased from Hart Scientific.**
- **DO NOT use the instrument for any application other than calibration work. The instrument was designed for temperature calibration. Any other use of the instrument may cause unknown hazards to the user.**
- **DO NOT use the instrument in environments other than those listed in the user's guide.**
- **Follow all safety guidelines listed in the user's manual.**
- **Calibration Equipment should only be used by Trained Personnel.**
- **If this instrument is used in a manner not specified by the manufacturer, the protection provided by the instrument may be impaired.**
- **If the instrument is used to control a calibration heat source, insure the heater is wired correctly (see Figure 1).**
- **Before initial use, or after transport, or after storage in humid or semi-humid environments, or anytime the dry-well has not been energized for more than 10 days, the instrument needs to be energized for a "dry-out" period of 2 hours before it can be assumed to meet all of the safety requirements of the IEC-61010-1. If the product is wet or has been in a wet environment, take necessary measures to remove moisture prior to applying power such as storage in a low humidity temperature chamber operating at 50 °C for 4 hours or more.**
- **The instrument is intended for indoor use only.**
- **The instrument is a precision instrument. Although it has been designed for optimum durability and trouble free operation, it must be handled with care.**

원문: Fluke Calibration 3125 2100 설명서 · 제조사 원문 자료입니다. 사양은 제조사 사정에 따라 변경될 수 있습니다.

- **Operate the instrument in room temperatures listed in Section 2.2, Environmental Conditions. The instrument is not vented. Therefore, clearance for ventilation is not a requirement. However, do not place the instrument on top of a calibration bath or dry-well where it would be in contact or direct path of heat.**
- **DO NOT stack items on top of the instrument.**

BURN HAZARD

- **The instrument can be used to control instruments which generate extreme temperatures. Precautions must be taken to prevent personal injury or damage to objects. Probes may be extremely hot or cold when removed from a calibration bath. Cautiously handle probes to prevent personal injury. Carefully place probes on a heat resistant surface or rack until they are at room temperature.**
- **Fires and severe burns may result if personnel fail to observe safety precautions.**

ELECTRICAL HAZARD

- **These guidelines must be followed to ensure that the safety mechanisms in this instrument will operate properly. The instrument must be plugged into an appropriate outlet as specified in Section 2.1, Specifications. Also, the current and voltage capability of the instrument must not be exceeded. The power cord of the instrument is equipped with a three-pronged grounding plug for your protection against electrical shock hazards. It must be plugged directly into a properly grounded three-prong receptacle. The receptacle must be installed in accordance with local codes and ordinances. Consult a qualified electrician. DO NOT use an extension cord or adapter plug.**
- **DO use a ground fault interrupt device. This system that is controlled by this instrument may contain a fluid. A ground fault device is advised in case fluid is present in the electrical system and could cause an electrical shock.**
- **Always replace the power cord with an approved cord of the correct rating and type. If you have questions, contact an Authorized Service Center (see Section 1.4).**
- **High voltage is used in the operation of this equipment. Severe injury or death may result if personnel fail to observe the safety precautions. Before working inside the instrument, turn off the power and disconnect the power cord.**

원문: Fluke Calibration 3125 2100 설명서 · 제조사 원문 자료입니다. 사양은 제조사 사정에 따라 변경될 수 있습니다.

FLUIDS

- **Fluids used in the system controlled by this instrument may produce noxious or toxic fumes under certain circumstances. Consult the fluid manufacturer's MSDS (Material Safety Data Sheet). Proper ventilation and safety precautions must be observed.**
- **The instrument is equipped with a soft cutout (adjustable parameter) and a hard cutout (set at the factory) Adjust the soft cutout according to fluid characteristics or application. As a guideline, the soft cutout should be set 10 °C to 15 °C below the flash point of the fluid (see Section 6.8, Cutout). Insure that the flash point, boiling point, or other key fluid characteristics are not exceeded.**

1.3.2 CAUTIONS

⚠ CAUTION

To avoid possible damage to the instrument, follow these guidelines.

- **DO NOT plug the instrument into 230 V if the indicator window of the power entry module reads 115 V. This action will cause the fuses to blow and may damage the instrument.**
- **DO use a ground fault interrupt device.**
- **Operate the instrument in room temperatures as listed in Section 2.2, Environmental Conditions.**
- **Calibration constants should only be changed by trained personnel. The correct setting of these parameters is important to the safety and proper operation of the instrument.**
- **The Factory Reset Sequence should be performed only by authorized personnel if no other action is successful in correcting a malfunction. You must have a copy of the most recent Report of Test to restore the test parameters.**
- **DO NOT operate this instrument in an excessively wet, oily, dusty, or dirty environment or place in locations where hot or cold liquids are splashed on it.**
- **Most probes have handle temperature limits. Be sure that the probe handle temperature limit is not exceeded in the air above the system controlled by this instrument.**

원문: Fluke Calibration 3125 2100 설명서 · 제조사 원문 자료입니다. 사양은 제조사 사정에 따라 변경될 수 있습니다.

- **The instrument and any thermometer probes used with it are sensitive instruments that can be easily damaged. Always handle these devices with care. Do not allow them to be dropped, struck, stressed, or overheated.**
- **DO NOT use this instrument in a system that exceeds the current capability of the instrument as listed in Section 2.1, Specifications.**
- **DO NOT replace fuse(s) with one of a higher current rating or type. Always replace the fuse with one of the same rating, voltage, and type. The current rating listed in Section 2.1, Specifications, 7 is the maximum for the instrument. If the instrument is connected to a system which uses less than the maximum capability of this instrument, the fuses need to be changed in order to be correct for the system. Once the instrument is connected to the system, the system current needs to be measured or calculated and the appropriate fuse size and characteristics selected. Section 4.6, Fuses, can be used as a guide for selecting a fuse.**
- **Once the correct fuse type and rating is selected, the following information is applicable. The instrument is equipped with operator accessible fuses. If a fuse blows, it may be due to a power surge or failure of a component. Replace the fuses once. If a fuse blows a second time, it is likely caused by failure of a component. As a test disconnect the output device (heater) and apply power to the rest of the system. Check to see if the fuse(s) blow. If the fuse(s) blow only when an output device (heater, stirrer) is connected, the fault may be in the system component. If not, contact an Authorized Service Center (see Section 1.4).**
- **If a mains supply power fluctuation occurs, immediately turn off the instrument. Power bumps from brown-outs and black-outs can damage the system.**
- **Wait until the power has stabilized before re-energizing the instrument.**
- **For best accuracy, the instrument needs to be calibrated with the system it controls.**

원문: Fluke Calibration 3125 2100 설명서 · 제조사 원문 자료입니다. 사양은 제조사 사정에 따라 변경될 수 있습니다.

1.4 Authorized Service Centers

Please contact one of the following authorized Service Centers to coordinate service on your Hart product:

Fluke Corporation, Hart Scientific Division
799 E. Utah Valley Drive
American Fork, UT 84003-9775
USA

Phone: +1.801.763.1600
Telefax: +1.801.763.1010
E-mail: support@hartscientific.com

Fluke Nederland B.V.
Customer Support Services
Science Park Eindhoven 5108
5692 EC Son
NETHERLANDS

Phone: +31-402-675300
Telefax: +31-402-675321
E-mail: ServiceDesk@fluke.nl

Fluke Int'l Corporation
Service Center - Instrimpex
Room 2301 Sciteck Tower
22 Jianguomenwai Dajie
Chao Yang District
Beijing 100004, PRC
CHINA

Phone: +86-10-6-512-3436
Telefax: +86-10-6-512-3437
E-mail: xingye.han@fluke.com.cn

원문: Fluke Calibration 3125 2100 설명서 · 제조사 원문 자료입니다. 사양은 제조사 사정에 따라 변경될 수 있습니다.

Fluke South East Asia Pte Ltd.
Fluke ASEAN Regional Office
Service Center
60 Alexandra Terrace #03-16
The Comtech (Lobby D)
118502
SINGAPORE

Phone: +65 6799-5588
Telefax: +65 6799-5588
E-mail: antng@singa.fluke.com

When contacting these Service Centers for support, please have the following information available:

- Model Number
- Serial Number
- Voltage
- Complete description of the problem

원문: Fluke Calibration 3125 2100 설명서 · 제조사 원문 자료입니다. 사양은 제조사 사정에 따라 변경될 수 있습니다.

Chapter 2
Specifications and Environmental Conditions

2.1 Specifications

Table 2. Specifications

Temperature Range	–100 °C to 670 °C (–148 °F to 1238 °F)
Accuracy Capability †	± 0.1 °C
Stability Capability †	**2100-T:** ± 0.0005 °C; **2100-P:** ± 0.001 °C
Stabilization Time	approximately 30 minutes (depends on system design)
Control Probe	100 Ω RTD, 4 wire (3 wire linearized thermistor optional, probe type set at the factory)
Resolution	0.0002 °C/ °F in high-resolution mode
Readout	Switchable °C or °F
Controller	Hybrid Digital/Analog controller with data retention
Fault Protection	High temperature cutout (Type K thermocouple input) Sensor burnout and short protection
Cutout Accuracy	± 10 °C
Combined Auxiliary and Heater Output (max)	115 VAC (±10 %), 50/60 Hz, 7.8 A, 895 W 230 VAC (±10 %), 50/60 Hz, 7.8 A, 1795 W
Power (max)	115 VAC (±10 %), 50/60 Hz, 8 A, 1150 W 230 VAC (±10 %), 50/60 Hz, 8 A, 2300 W Note: Internal electronics require 0.2 A to operate.
System Fuses	10 A 250 V fast acting (max),
Exterior Dimension	72 mm H x 172 mm W x 250 mm D (2.83 in x 6.75 in x 9.86 in)
Weight	1.8 kg (4 lbs.)
Safety	OVERVOLTAGE (Installation) CATEGORY II, Pollution Degree 2 per IEC-61010-1
†Performance is dependent on system design including the control sensor. Capabilities are based on Factory observed performance	

원문: Fluke Calibration 3125 2100 설명서 · 제조사 원문 자료입니다. 사양은 제조사 사정에 따라 변경될 수 있습니다.

2.2 Environmental Conditions

Although the instrument has been designed for optimum durability and trouble-free operation, it must be handled with care. The instrument should not be operated in an excessively dusty or dirty environment. Maintenance and cleaning recommendations can be found in the Maintenance Section of this manual.

The instrument operates safely under the following conditions:

- ambient temperature range: 5 – 50 °C (41 – 122 °F)
- ambient relative humidity: maximum 80 % for temperature <31 °C, decreasing linearly to 50 % at 40 °C
- pressure: 75kPa - 106kPa
- mains voltage within ± 10 % of nominal
- vibrations in the calibration environment should be minimized
- altitude less than 2,000 meters
- indoor use only

원문: Fluke Calibration 3125 2100 설명서 · 제조사 원문 자료입니다. 사양은 제조사 사정에 따라 변경될 수 있습니다.

Chapter 3
Quick Start

This chapter gives a brief summary of the steps required to set up and operate the 2100 temperature controller. This should be used as a general overview and reference and not as a substitute for the remainder of the manual. Please read Sections4 through carefully before operating the controller.

3.1 Unpacking

Unpack the controller carefully and inspect it for any damage that may have occurred during shipment. If there is shipping damage, notify the carrier immediately.

An RTD (thermistor optional) control probe and a thermocouple cutout probe should have been purchased along with the controller. Typically, the user provides the bath or system to be controlled and the heater.

Verify that the following components are present:

- 2100 Controller
- Control Probe
- Power Cord
- Two Power Cords - 1 for the Heater and 1 for the Stirrer
- Thermocouple Connector
- User's Guide

원문: Fluke Calibration 3125 2100 설명서 · 제조사 원문 자료입니다. 사양은 제조사 사정에 따라 변경될 수 있습니다.

3.2 Set Up

Set up of the controller requires unpacking and placement of the controller, connection of the heater, connection of the stirrer, if applicable, installation of the control and cutout probes, and connection of power.

⚠ CAUTION:

Refer to Section 4, Installation for detailed instructions on proper installation of the controller. Pay particular attention to instructions for the heater, stirrer, control probe, and power setup.

3.3 Setting the Temperature

In the following discussion and throughout this manual a solid box around the word SET, U P, DOWN or EXIT indicates the panel button to press while the dotted box indicates the display reading on the front panel. Explanation of the button function or display reading is written at the right.

To view or set the temperature set-point proceed as follows. The front panel LED display normally shows the actual process temperature.

24.68 C	Process temperature display

When “SET” is pressed the display will show the set-point memory that is currently being used and its value. Eight set-point memories are available.

SET	Access set-point selection
1. 25.0	Set-point 1, 25.0 °C currently used

Press “SET” to select this memory and access the set-point value.

SET	Access set-point value
C 25.00	Current value of set-point 1, 25.00 °C

원문: Fluke Calibration 3125 2100 설명서 · 제조사 원문 자료입니다. 사양은 제조사 사정에 따라 변경될 수 있습니다.

Press “UP” or “DOWN” to change the set-point value.

UP Increment display

C 30.00 New set-point value

Press SET to accept the new value and display the vernier value. The system begins heating or cooling to the new set-point.

SET Store new set-point, access vernier

0.00000 Current vernier value

Press “EXIT” and the process temperature will be displayed again.

EXIT Return to the temperature display

24.73 C Process temperature display

The system will heat or cool until it reaches the new set-point temperature. The over-temperature cutout should be correctly set for added safety. See Section 6.8.

⚠ *Note:*

To obtain optimum control stability adjust the proportional band as discussed in Section 6.7.

원문: Fluke Calibration 3125 2100 설명서 · 제조사 원문 자료입니다. 사양은 제조사 사정에 따라 변경될 수 있습니다.

3-4

원문: Fluke Calibration 3125 2100 설명서 · 제조사 원문 자료입니다. 사양은 제조사 사정에 따라 변경될 수 있습니다.

Chapter 4
Installation

4.1 Setup

The 2100 controller is a precision instrument which should be located in an appropriate environment. The location should be free from excessive dirt, moisture, vibration, or temperature variations. There should be no present danger of spilled liquids.

4.2 Heater/Stirrer

⚠ WARNING:

The output voltage to the heater and stirrer sockets is the same as the input voltage of the power entry module.

⚠ CAUTION:

Insure that the combined current of the heater and stirrer does not exceed that listed in Section 2.1, Specifications.

Connect the heater to the back of the controller into the socket labeled "HEATER". Be sure the heater cable is adequate for the amount of current required and that the heater is wired correctly and safely. See Figure 1 for heater wiring. If applicable, connect the stirring device to the back of the controller in the socket labeled "STIRRER". The stirrer outlet wiring is the same as the heater outlet shown in Figure 1.

원문: Fluke Calibration 3125 2100 설명서 · 제조사 원문 자료입니다. 사양은 제조사 사정에 따라 변경될 수 있습니다.

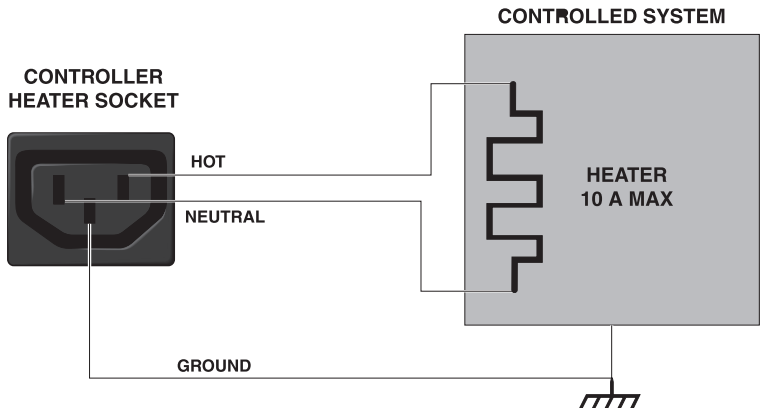

Figure 1. Controller to Heater Wiring

4.3 Control Probe

⚠ CAUTION:

Before using the controller, check controller settings and insure they are set appropriately for the limitations of the control probe.

If a control probe was ordered with the controller, note the following:

PRT - The controller hard cutout is factory set to 685 °C. The controller soft cutout is set to 300 °C due to the temperature limit of the PRT.

Thermistor - The controller hard cutout is factory set to 125 °C. The controller soft cutout is set to 125 °C due to the temperature limit of the thermistor.

If the controller was ordered without a control probe, all controller parameters are set to factory default settings and need to checked and set for the specific control probe used with the controller.

Connect the control probe into the socket at the back of the controller labeled “PROBE” (see Figure 2). Insert the probe into the bath or system to be controlled. For best stability and response time the control probe should be located in close proximity to the heater. Observe the maximum temperature rating of the probe and be careful it is not exceeded.

Normally the 2100 controller is set up to use a 100 Ω platinum probe. If better resolution and stability are desired the 2100 may alternately be configured to use Hart’s 2611 linearized thermistor probe. The controller operating temperature range with the thermistor probe is –10 °C to 110 °C. For information on setup for the thermistor probe see Section.

원문: Fluke Calibration 3125 2100 설명서 · 제조사 원문 자료입니다. 사양은 제조사 사정에 따라 변경될 수 있습니다.

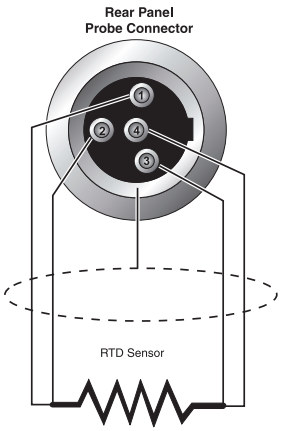

Figure 2. RTD Probe Wiring

4.4 Thermocouple

Connect the optional thermocouple cutout probe to the back of the controller to the connector labeled “TC”. Insert the probe into the bath or system being controlled. If the safety cutout feature is not to be used then this input must be shorted with a small wire jumper in order for the controller to operate properly (see Figure 3).

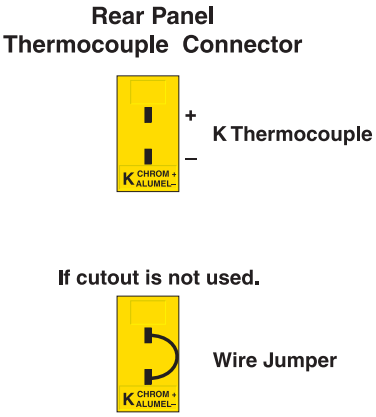

Figure 3. Cutout Probe Connections

4.5 Power

⚠ CAUTION:

Do not plug the instrument into 230 V if the indicator window of the power entry module reads 115 V. This action will cause the fuses to blow and may damage the instrument.

원문: Fluke Calibration 3125 2100 설명서 · 제조사 원문 자료입니다. 사양은 제조사 사정에 따라 변경될 수 있습니다.

Plug the controller power cord into a mains outlet of the proper voltage, frequency, and current capability (see Section 2.1, Specifications). Insure that the indicator window of the power entry module matches the voltage of the mains supply.

Turn the controller on using the rear panel "POWER" switch. The controller will turn on and begin to heat or cool the system to reach the previously programmed temperature set-point. The front panel LED display will indicate the actual process temperature. See Section 4.6, Fuses for information on selecting the correct fuse for the application.

When powered on the control panel display will briefly show a four digit number. This number indicates the number of times power has been applied to the unit. Also briefly displayed is data which indicates the controller hardware configuration. This data is used in some circumstances for diagnostic purposes.

Ordinarily, the controller is set up to be used with a metrology bath; however, you may want to use the controller with a dry-well or other system. Contact an Authorized Service center for assistance on setting the "Gain Range" for the system.

4.6 Fuses

⚠ CAUTION:

Never use this instrument in a system that uses more power or current as listed in Section 2.1, Specifications.

The controller is shipped from the factory with fast acting fuses rated for the maximum capacity of the instrument.

If the controller is connected to a system which uses less than 10 amps, the fuses will need to be changed in order to be correct for the system. Once the controller is connected in the system, the system current needs to be measured or calculated and the appropriate fuse size and characteristics selected. Generally, the fuse selected is rated at 125 % of the maximum current of the system. The time-current characteristics of the fuse are selected by the application. Usually, fast acting fuses are selected systems without a high in-rush current, i.e. "hot" calibration baths. Time-delay or slow blow fuses are selected for systems with a high in-rush current, i.e. "cold" calibration baths. Refer to the fuse-ology section of your fuse catalog for help in determining fuse size and characteristics or contact an Authorized Service Center (see Section 1.4) for assistance. Once the correct fuse characteristics and rating of the fuses have been selected and the appropriate fuses placed in the power entry module of the instrument, mark the instrument so the user can visibly see the fuse size and rating for fuse replacement. Be sure to change both fuses to the new rating and correct characteristic.

원문: Fluke Calibration 3125 2100 설명서 · 제조사 원문 자료입니다. 사양은 제조사 사정에 따라 변경될 수 있습니다.

The controller uses 0.2 amps of current. This current should be taken into consideration when calculating the system power.

Example when using the power of the system:

P = Power of the system (Total Watts)

V = Nominal line voltage (115 VAC or 230 VAC)

I = Fuse current

$$l = 1.25 \times \frac{P}{0.9 \times V}$$

Example when using the system current:

I = System current

IF = Fuse current rating

IF = 1.25 × I

원문: Fluke Calibration 3125 2100 설명서 · 제조사 원문 자료입니다. 사양은 제조사 사정에 따라 변경될 수 있습니다.

4-6

원문: Fluke Calibration 3125 2100 설명서 · 제조사 원문 자료입니다. 사양은 제조사 사정에 따라 변경될 수 있습니다.

Chapter 5
Parts and Controls

5.1 Control System

The 2100 temperature controller is not specified for use with a particular system. Its flexibility enables it to be used with a large variety of control systems. Often the controller is used with a precision constant temperature bath.

It is the responsibility of the user to ensure that the components are chosen and the system constructed to ensure safe and proper operation of the complete system. The user should have a good knowledge of and experience with electrical fundamentals and wiring practice as well as control systems. Hart Scientific cannot be responsible for any damages or injury resulting from improper design or operation of the control system. Technical support for setting up and operating a control system using the 2100 controller is available by telephone or fax from Hart Scientific. Be sure to read the 2100 user manual.

5.2 Temperature Controller

The system temperature is controlled by Hart Scientific's unique hybrid digital/analog temperature controller. The controller offers the tight control stability of an analog temperature controller as well as the flexibility and programmability of a digital controller.

The temperature is monitored with a platinum resistance sensor in the control probe, or alternately a linearized thermistor probe. The signal is electronically compared with the programmable reference signal, amplified, and then passed to a pulse-width modulator circuit which controls the amount of power applied to the bath heater.

For protection against solid-state relay failure or other circuit failure, the controller will automatically turn off the heater with a second mechanical relay anytime the process temperature is more than a certain amount above the set-point temperature. As a second protection device, the controller is also equipped with a separate thermocouple temperature monitoring circuit which will shut off the heater if the temperature exceeds the cutout set-point.

원문: Fluke Calibration 3125 2100 설명서 · 제조사 원문 자료입니다. 사양은 제조사 사정에 따라 변경될 수 있습니다.

The controller allows the operator to set the set-point temperature with high resolution, set the cutout, adjust the proportional band, monitor the heater output power, and program the controller configuration and calibration parameters.

The controller may be operated in temperature units of degrees Celsius or Fahrenheit. The controller is operated and programmed from the front control panel using the four key switches and digital LED display. The controller equipped with an RS-232 serial or may also be optionally equipped with an IEEE-488 (GPIB) digital interface for remote operation. Operation of the controller using the front control panel is discussed following in Section6. Operation using the digital interface is discussed in Section7.

When the controller is set to a new set-point the system will heat or cool to the new temperature. Once the new temperature is reached it usually takes 10-15 minutes for the temperature to settle and stabilize. There may be a small overshoot or undershoot of about 0.5 °C or more depending on the system and proportional band.

5.3 Front Panel

The following controls and indicators are present: (1) the digital display, (2) the control buttons, and (3) the control indicator light. (see Figure 4)

(1) The digital display is an important part of the temperature controller because it not only displays set and actual temperatures but also various controller functions, settings, and constants. The display shows temperatures in values according to the selected scale °C or °F.

(2) The control buttons (SET, DOWN, UP, and EXIT) are used to set the temperature set-point, access and set other operating parameters, and access and set calibration parameters.

Setting the control temperature is done directly in degrees of the current scale. It can be set to one-hundredth of a degree Celsius.

The functions of the buttons are as follows:

SET – Used to display the next parameter in the menu and to set parameters to the displayed value.

DOWN – Used to decrement the displayed value of parameters.

UP – Used to increment the displayed value.

EXIT – Used to exit from a menu. When EXIT is pressed any changes made to the displayed value will be ignored.

원문: Fluke Calibration 3125 2100 설명서 · 제조사 원문 자료입니다. 사양은 제조사 사정에 따라 변경될 수 있습니다.

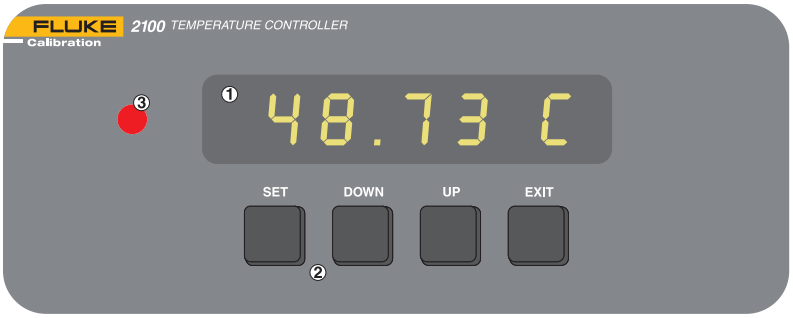

Figure 4. Front panel features

(3) The Control Indicator is a two color light emitting diode. This indicator lets the user visually see the ratio of heating to cooling. When the indicator is red the heater is on, and when it is green the heater is off and the system is cooling.

5.4 Rear Panel

The following features are found on the rear panel of the controller: (1) power entry module, (2) the solid state relay, (3) the heater power connector, (4) the stirrer power connector, (5) the control probe input connector, (6) the cutout thermocouple connector, (7) the optional IEEE-488 (GPIB) interface connector, (8) the RS-232 interface connector, and (9) the serial number label. (see Figure 5)

⚠ WARNING:

The output voltage to the heater and stirrer sockets (Items 3 and 4 in Figure 5) is the same as the input voltage of the power entry module (Item 1 in Figure 5).

(1) The power entry module includes: (A) the IEC power line connector, (B) the ON/OFF switch, (C) the voltage selector with indicator window and two fuses. The unit is shipped from the factory with 10 A 250 V F fuses. Additional information on fuse usage is in Section 1.3 and Section 4.6.

(A) The appropriate power cord with IEC connector has been included with the controller for the voltage specified in the order.

(B) The double pole single throw (DPST) power switch indicates the ON/OFF positions with the universal I/O.

(C) The power entry module is provided with a dual voltage selector integrated into the fuse holder. The controller has been specially designed to allow either 115 or 230 VAC operation. The voltage indicator window notifies the user of the voltage selected. See Figure 5.

원문: Fluke Calibration 3125 2100 설명서 · 제조사 원문 자료입니다. 사양은 제조사 사정에 따라 변경될 수 있습니다.

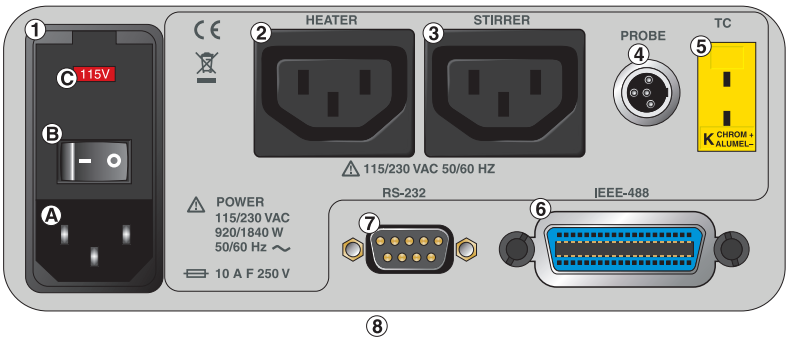

Figure 5. Back panel features

Two fuses are contained in the internal fuse holder. The fuse holder will accept either 1/4" x 1 1/4" or 5 x 20 mm fuses. Access to the fuses and the voltage selector is obtained by placing a flathead screwdriver in the slot at the top of the power entry module and opening the module front panel.

⚠ WARNING:

Access to the fuses may not be obtained with the power cord plugged into the IEC power line connector.

(2) The heater socket is the source of controlled power for the system heater.

This power is switched by the solid-state relay to maintain a constant temperature. The voltage is the same as that supplied through the power cord (A). For a diagram of how to wire the heater to the controller see Figure 1. An extra line cord has been included with the unit to make this connection.

(3) The stirrer socket is an auxiliary power socket for a stirring device for the bath. The voltage is the same as supplied through the mains supply to the power cord. An extra line cord is included with the unit to make this connection.

(4) The control probe is plugged in here. Normally the probe is a DIN 43760 type RTD. Optionally a thermistor probe with a much more limited temperature range but better stability is available. The controller must be internally configured to work with one type of probe or the other. Probes or additional connectors for use with the user's own probes are available from Hart. For assistance in wiring an RTD to the controller see Figure 2. A probe connector has been provided.

(5) The thermocouple cutout probe plugs in here. This probe senses the system temperature for the safety cutout. When the temperature exceeds the cutout set-point the heater is disabled by opening a relay inside the controller. This feature should be utilized for added safety. The thermocouple probe is type K. Probes and connectors are available from Hart Scientific. If the cutout feature of the controller is not used, the thermocouple input must be shorted with a wire jumper in order for the controller to continue to function (see Figure 3).

(6) The optional IEEE-488 (GPIB) interface connector for remote computer control.

(7) The RS-232 communications cable is connected to this 9 pin D-subminiature connector. This enables the controller to be programmed and operated remotely.

(8) The serial number label is located on the bottom of the unit towards the back panel.

원문: Fluke Calibration 3125 2100 설명서 · 제조사 원문 자료입니다. 사양은 제조사 사정에 따라 변경될 수 있습니다.

Chapter 6
Controller Operation

This chapter discusses in detail how to operate the temperature controller using the front control panel. Using the front panel key switches and LED display the user may monitor the process temperature, set the temperature set-point in degrees C or F, monitor the heater output power, adjust the controller proportional band, set the cutout set-point, and program the probe calibration parameters, operating parameters, serial and IEEE-488 interface configuration, and controller calibration parameters. Operation of the functions are shown in the flowchart summarized in Figure 6.

6.1 Process temperature

The digital LED display on the front panel allows direct viewing of the process temperature. This temperature value is what is normally shown on the display. The units, C or F, of the temperature value are displayed at the right. For example,

25.00 C	Process temperature in degrees Celsius

The temperature display function may be accessed from any other function by pressing the “EXIT” button.

6.2 Reset Cutout

If the over-temperature cutout has been triggered then the temperature display will alternately flash,

Cutout	Indicates cutout condition

The message will continue to flash until the temperature is reduced and the cut-out is reset.

The cutout has two modes — automatic reset and manual reset. The mode determines how the cutout is reset which allows the bath to heat up again. When in automatic mode, the cutout will reset itself as soon as the temperature is lowered below the cutout set-point. With manual reset mode the cutout must be reset by the operator after the temperature falls below the set-point.

원문: Fluke Calibration 3125 2100 설명서 · 제조사 원문 자료입니다. 사양은 제조사 사정에 따라 변경될 수 있습니다.

When the cutout is active and the cutout mode is set to manual (“reset”) then the display will flash “cutout” until the user resets the cutout. To access the reset cutout function press the “SET” button.

Access cutout reset function

The display will indicate the reset function.

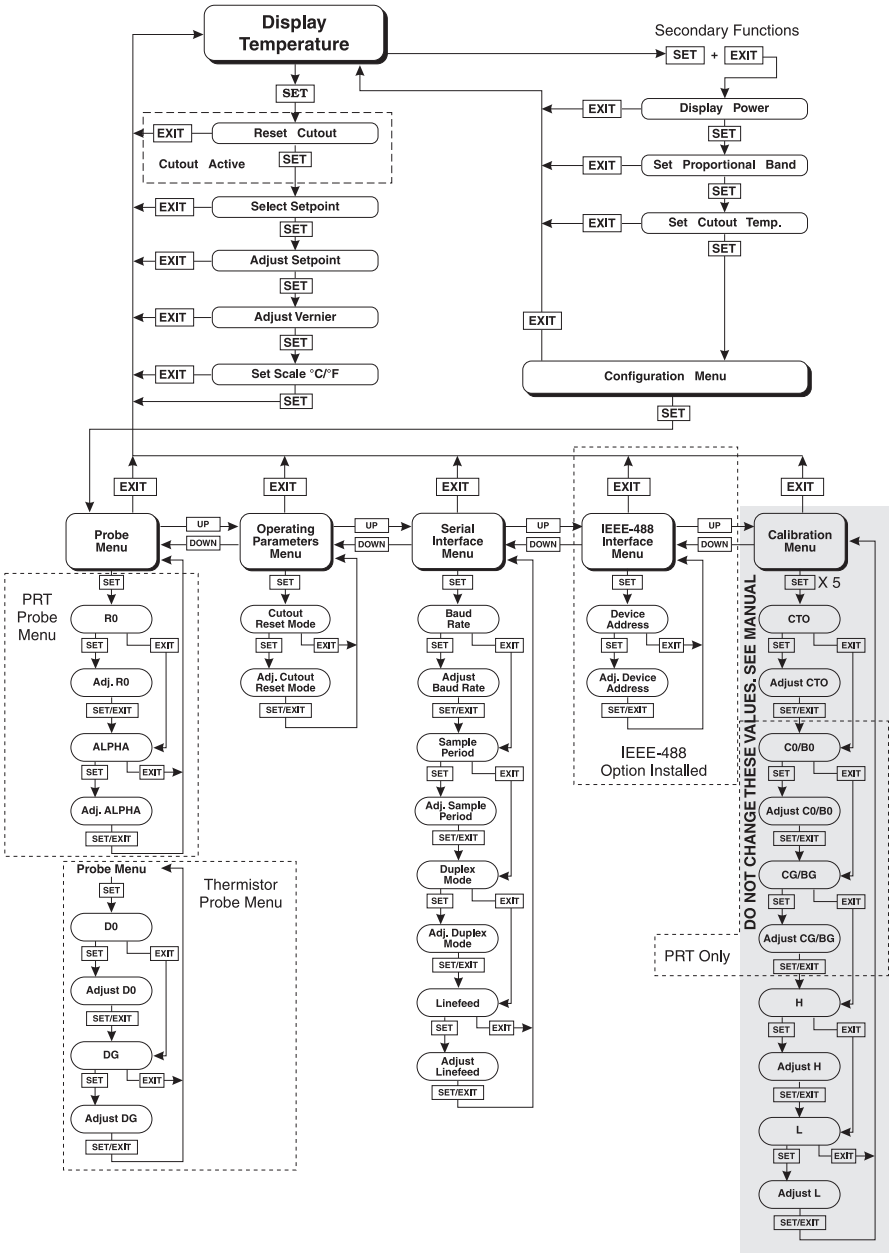

Figure 6. Controller Operation Flowchart

원문: Fluke Calibration 3125 2100 설명서 · 제조사 원문 자료입니다. 사양은 제조사 사정에 따라 변경될 수 있습니다.

rESEt ? Cutout reset function

Press “SET” once more to reset the cutout.

SET Reset cutout

This will also switch the display to the set temperature function. To return to displaying the temperature press the “EXIT” button. If the cutout is still in the over-temperature fault condition the display will continue to flash “cutout”. The bath temperature must drop a few degrees below the cutout set-point before the cutout can be reset.

6.3 Temperature Set-point

The temperature can be set to any value within the range as given in the specifications with a high degree of resolution. The temperature range of the particular fluid used in the bath must be known by the operator and the bath should only be operated well below the upper temperature limit of the liquid. In addition, the cutout temperature should also be set below the upper limit of the fluid.

Setting the temperature involves three steps: (1) select the set-point memory, (2) adjust the set-point value, and (3) adjust the vernier, if desired.

6.3.1 Programmable Set-points

The controller stores 8 set-point temperatures in memory. The set-points can be quickly recalled to conveniently set the system to a previously programmed temperature.

To set the temperature one must first select the set-point memory. This function is accessed from the temperature display function by pressing “SET”. The number of the set-point memory currently being used is shown at the left on the display followed by the current set-point value.

25.00 C Process temperature in degrees Celsius

SET Access set-point memory

1. 25.0 Set-point memory 1, 25.0 °C currently used

To change the set-point memory press “UP” or “DOWN”.

UP Increment memory

4. 40.0 New set-point memory 4, 40.0 °C

원문: Fluke Calibration 3125 2100 설명서 · 제조사 원문 자료입니다. 사양은 제조사 사정에 따라 변경될 수 있습니다.

Press “SET” to accept the new selection and access the set-point value.

SET Accept selected set-point memory

6.3.2 Set-point Value

The set-point value may be adjusted after selecting the set-point memory and pressing “SET”. The set-point value is displayed with the units, C or F, at the left.

C 40.00 Set-point 4 value in °C

If the set-point value need not be changed then press “EXIT” to resume displaying the bath temperature. To adjust the set-point value press “UP” or “DOWN”.

UP Increment display

C 42.50 New set-point value

When the desired set-point value is reached press “SET” to accept the new value and access the set-point vernier. If “EXIT” is pressed instead then any changes made to the set-point will be ignored.

SET Accept new set-point value

6.3.3 Set-point Vernier

The set-point value can be set with a resolution of 0.01 °C. The user may want to adjust the set-point slightly to achieve a more precise temperature. The set-point vernier allows one to adjust the temperature below or above the set-point by a small amount with very high resolution. Each of the 8 stored set-points has an associated vernier setting. The vernier is accessed from the set-point by pressing “SET”. The vernier setting is displayed as a 6 digit number with five digits after the decimal point. This is a temperature offset in degrees of the selected units, C or F.

0.00000 Current vernier value in °C

To adjust the vernier press “UP” or “DOWN”. Unlike most functions the vernier setting has immediate effect as the vernier is adjusted. “SET” need not be pressed. This allows one to continually adjust the system temperature with the vernier as it is displayed.

UP Increment display

0.00090 New vernier setting

원문: Fluke Calibration 3125 2100 설명서 · 제조사 원문 자료입니다. 사양은 제조사 사정에 따라 변경될 수 있습니다.

Next press “EXIT” to return to the temperature display or “SET” to access the temperature scale units selection.

SET — Access scale units

6.4 Temperature Scale Units

The temperature scale units of the controller may be set by the user to degrees Celsius (°C) or Fahrenheit (°F). The units will be used in displaying the process temperature, set-point, vernier, proportional band, and cutout set-point.

The temperature scale units selection is accessed after the vernier adjustment function by pressing “SET”. From the temperature display function access the units selection by pressing “SET” 4 times.

25.00 C — Process temperature

SET — Access set-point memory

1. 25.0 — Set-point memory

SET — Access set-point value

C 25.00 — Set-point value

SET — Access vernier

0.00000 — Vernier setting

SET — Access scale units selection

Un= C — Scale units currently selected

Press “UP” or “DOWN” to change the units.

UP — Change units

Un= F — New units selected

Press “SET” to accept the new selection and resume displaying the bath temperature.

SET — Set the new units and resume temperature display

원문: Fluke Calibration 3125 2100 설명서 · 제조사 원문 자료입니다. 사양은 제조사 사정에 따라 변경될 수 있습니다.

6.5 Secondary Menu

Functions which are used less often are accessed within the secondary menu. The secondary menu is accessed by pressing “SET” and “EXIT” simultaneously and then releasing. The first function in the secondary menu is the heater power display.

6.6 Heater Power

The temperature controller controls the temperature of the system by pulsing the heater on and off. The total power being applied to the heater is determined by the duty cycle or the ratio of heater on time to the pulse cycle time. This value may be estimated by watching the red/green control indicator light or read directly from the digital display. By knowing the amount of heating the user can tell if the system is heating up to the set-point, cooling down, or controlling at a constant temperature. Monitoring the percent heater power will let the user know how stable the temperature is. With good control stability the percent heating power should not fluctuate more than ±1 % within one minute. The heater power display is accessed in the secondary menu. Press “SET” and “EXIT” simultaneously and release. The heater power will be displayed as a percentage of full power.

Access heater power in secondary menu

12 Pct

Heater power in percent

To exit out of the secondary menu press “EXIT”. To continue on to the proportional band setting function press “SET”.

Return to temperature display

6.7 Proportional Band

In a proportional controller such as this the heater output power is proportional to the process temperature over a limited range of temperatures around the set-point. This range of temperature is called the proportional band. At the bottom of the proportional band the heater output is 100 %. At the top of the proportional band the heater output is 0. Thus as the temperature rises the heater power is reduced, which consequently tends to lower the temperature back down. In this way the temperature is maintained at a fairly constant value.

The temperature stability of the system depends on the width of the proportional band. See Figure 7. If the band is too wide the temperature will tend to deviate excessively from the set-point due to varying external conditions. This is because the power output changes very little with temperature and the controller cannot respond very well to changing conditions or noise in the system. If the proportional band is too narrow the temperature may swing back and

원문: Fluke Calibration 3125 2100 설명서 · 제조사 원문 자료입니다. 사양은 제조사 사정에 따라 변경될 수 있습니다.

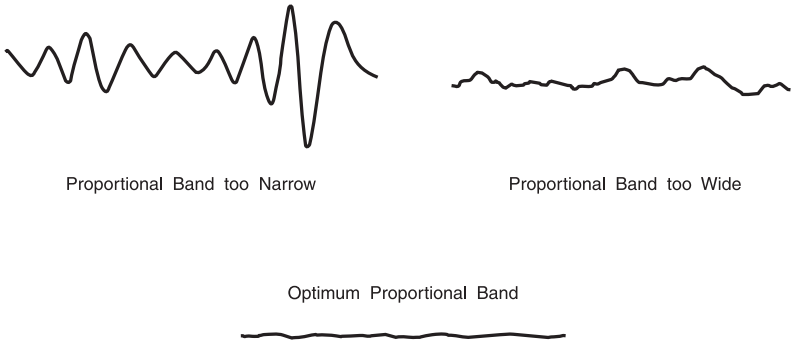

Figure 7. System Temperature Fluctuations at Various Proportional Band Settings

forth because the controller overreacts to temperature variations. For best control stability the proportional band must be set for the optimum width.

The optimum proportional band width depends on several factors including system heat transfer characteristics and heater-probe positioning. Thus the proportional band width may require adjustment for best bath stability when any of these conditions change.

The proportional band width is easily adjusted from the controller front panel. The width may be set to discrete values in degrees C or F depending on the selected units. The optimum proportional band width setting may be determined by monitoring the stability with a high resolution thermometer or with the controller percent output power display. Narrow the proportional band width to the point at which the process temperature begins to oscillate and then increase the band width from this point to 3 or 4 times wider.

The integral time of the controller is determined by component selection and cannot be set by the user. It is fixed at approximately 300 seconds.

The proportional band adjustment may be accessed within the secondary menu. Press “SET” and “EXIT” to enter the secondary menu and show the heater power. Then press “SET” to access the proportional band.

SET + EXIT — Access heater power in secondary menu

12 Pct — Heater power in percent

SET — Access proportional band

Pb=0.101C — Proportional band setting

원문: Fluke Calibration 3125 2100 설명서 · 제조사 원문 자료입니다. 사양은 제조사 사정에 따라 변경될 수 있습니다.

To change the proportional band press “UP” or “DOWN”.

Decrement display

Pb=0.060C New proportional band setting

To accept the new setting and access the cutout set-point press “SET”. Pressing “EXIT” will exit the secondary menu ignoring any changes just made to the proportional band value.

Accept the new proportional band setting

6.8 Cutout

As a protection against software or hardware fault, shorted heater triac, or user error, the controller is equipped with an adjustable heater cutout device that will shut off power to the heater if the system temperature exceeds a set value.

This protects the heater and system materials from excessive temperatures. The cutout temperature is programmable by the operator from the front panel of the controller. It must always be set below the upper temperature limit of the system components.

If the cutout is activated because of excessive temperature then power to the heater will be shut off and the system will cool. It will cool until it reaches a few degrees below the cutout set-point temperature. At this point the action of the cutout is determined by the setting of the cutout mode parameter. The cutout has two modes — automatic reset or manual reset. If the mode is set to automatic, then the cutout will automatically reset itself when the system temperature falls below the reset temperature allowing the system to heat up again. If the mode is set to manual, then the heater will remain disabled until the user manually resets the cutout.

The cutout set-point may be accessed within the secondary menu. Press “SET” and “EXIT” to enter the secondary menu and show the heater power. Then press “SET” twice to access the cutout set-point.

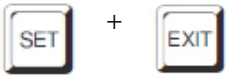

Access heater power in secondary menu

12 Pct Heater power in percent

Access proportional band

Pb=0.101C Proportional band setting

원문: Fluke Calibration 3125 2100 설명서 · 제조사 원문 자료입니다. 사양은 제조사 사정에 따라 변경될 수 있습니다.

Access cutout set-point

CO= 210C	Cutout set-point

To change the cutout set-point press “UP” or “DOWN”.

Decrement display

CO= 95C	New cutout set-point

To accept the new cutout set-point press “SET”.

Accept cutout set-point

The next function is the configuration menu. Press “EXIT” to resume displaying the process temperature.

6.9 Controller Configuration

The controller has a number of configuration and operating options and calibration parameters which are programmable via the front panel. These are accessed from the secondary menu after the cutout set-point function by pressing “SET”. The display will prompt with “COnFIG”. Press “SET” once more. There are 5 sets of configuration parameters — probe parameters, operating parameters, serial interface parameters, IEEE-488 interface parameters, and controller calibration parameters. The menus are selected using the “UP” and “DOWN” keys and then pressing “SET”. See Figure 6.

6.10 Probe Parameters RTD Sensor

The probe parameter menu is indicated by,

PrObE	Probe parameters menu

Press “SET” to enter the menu. The probe parameters menu contains the parameters, R0 and ALPHA, which characterize the resistance-temperature relationship of the platinum control probe.

If the controller is configured to use a thermistor probe then the constants are D0 and DG.

These parameters may be adjusted to improve the accuracy of the bath. This procedure is explained in detail in Section8.

The probe parameters are accessed by pressing “SET” after the name of the parameter is displayed. The value of the parameter may be changed using the “UP” and “DOWN” buttons. After the desired value is reached press “SET” to set the parameter to the new value. Pressing “EXIT” will cause the parameter to be skipped ignoring any changes that may have been made.

원문: Fluke Calibration 3125 2100 설명서 · 제조사 원문 자료입니다. 사양은 제조사 사정에 따라 변경될 수 있습니다.

6.10.1 R0

This probe parameter refers to the resistance of the control probe at 0 °C. Normally this is set for 100.000 ohms.

6.10.2 ALPHA

This probe parameter refers to the average sensitivity of the probe between 0 and 100 °C. Normally this is set for 0.00385 $°C^{-1}$.

6.11 Probe Parameters Thermistor Sensor

The probe parameter menu is indicated by,

PrObE	Probe parameters menu

Press “SET” to enter the menu. The probe parameters menu contains the parameters, D0 and DG. These parameters characterize the transfer function of the linearized thermistor control probe. The parameters may be adjusted to improve the accuracy of the bath. This procedure is explained in detail in Section 8.

The probe parameters are accessed by pressing “SET” after the name of the parameter is displayed. The value of the parameter may be changed using the “UP” and “DOWN” buttons. After the desired value is reached press “SET” to set the parameter to the new value. Pressing “EXIT” will cause the parameter to be skipped ignoring any changes that may have been made.

6.11.1 D0

This parameter refers to the temperature at which the control probe output would be 0. Normally this is set for –25.229.

6.11.2 DG

This probe parameter refers to the temperature span of the probe between 0 and 100 % output. Normally this is set for 186.794.

6.12 Operating Parameters

The operating parameters menu is indicated by,

PAr	Operating parameters menu

Press “SET” to enter the menu. The operating parameters menu contains the cutout reset mode parameter.

6.12.1 Cutout Reset Mode

The cutout reset mode determines whether the cutout resets automatically when the system temperature drops to a safe value or must be manually reset by the operator.

원문: Fluke Calibration 3125 2100 설명서 · 제조사 원문 자료입니다. 사양은 제조사 사정에 따라 변경될 수 있습니다.

The parameter is indicated by,

CtorSt	Cutout reset mode parameter

Press “SET” to access the parameter setting. Normally the cutout is set for manual mode.

Cto=rSt	Cutout set for manual reset

To change to automatic reset mode press “UP” and then “SET”.

Cto=Auto	Cutout set for automatic reset

6.13 Serial Interface Parameters

The serial RS-232 interface parameters menu is indicated by,

SErIAL	Serial RS-232 interface parameters menu

The serial interface parameters menu contains parameters which determine the operation of the serial interface. These controls only apply to controllers fitted with the serial interface. The parameters in the menu are — baud rate, sample period, duplex mode, and linefeed.

6.13.1 Baud Rate

The baud rate is the first parameter in the menu. The baud rate setting determines the serial communications transmission rate.

The baud rate parameter is indicated by,

BAUd	Serial baud rate parameter

Press “SET” to choose to set the baud rate. The current baud rate value will then be displayed.

2400 b	Current baud rate

The baud rate of the serial communications may be programmed to 300, 600, 1200, or 2400 baud. Use “UP” or “DOWN” to change the baud rate value.

1200 b	New baud rate

Press “SET” to set the baud rate to the new value or “EXIT” to abort the operation and skip to the next parameter in the menu.

원문: Fluke Calibration 3125 2100 설명서 · 제조사 원문 자료입니다. 사양은 제조사 사정에 따라 변경될 수 있습니다.

6.13.2 Sample Period

The sample period is the next parameter in the serial interface parameter menu. The sample period is the time period in seconds between temperature measurements transmitted from the serial interface. If the sample rate is set to 5 for instance then the controller will transmit the current measurement over the serial interface approximately every five seconds. The automatic sampling is disabled with a sample period of 0. The sample period is indicated by,

SAmPLE	Serial sample period parameter

Press “SET” to choose to set the sample period. The current sample period value will be displayed.

SA= 1	Current sample period (seconds)

Adjust the value with “UP” or “DOWN” and then use “SET” to set the sample rate to the displayed value.

SA= 60	New sample period

6.13.3 Duplex Mode

The next parameter is the duplex mode. The duplex mode may be set to full duplex or half duplex. With full duplex any commands received by the controller via the serial interface will be immediately echoed or transmitted back to the device of origin. With half duplex the commands will be executed but not echoed. The duplex mode parameter is indicated by,

dUPL	Serial duplex mode parameter

Press “SET” to access the mode setting.

dUP=FULL	Current duplex mode setting

The mode may be changed using “UP” or “DOWN” and pressing “SET”.

dUP=HALF	New duplex mode setting

6.13.4 Linefeed

The final parameter in the serial interface menu is the linefeed mode. This parameter enables (on) or disables (off) transmission of a linefeed character (LF, ASCII 10) after transmission of any carriage-return. The linefeed parameter is indicated by,

원문: Fluke Calibration 3125 2100 설명서 · 제조사 원문 자료입니다. 사양은 제조사 사정에 따라 변경될 수 있습니다.

we measure, we calibrate, we validate.
㈜테솔 · www.tessol.com TS-TL-FLK-003 46 / 70
KOLAS 국제공인교정기관 · ISO/IEC 17025

TS-TL-FLK-003

LF	Serial linefeed parameter

Press “SET” to access the linefeed parameter.

LF= On	Current linefeed setting

The mode may be changed using “UP” or “DOWN” and pressing “SET”.

LF= OFF	New linefeed setting

6.14 IEEE-488 Parameters

Controllers may optionally be fitted with an IEEE-488 GPIB interface. In this case the user may set the interface address within the IEEE-488 parameter menu. This menu does not appear on instruments not fitted with the interface.

The menu is indicated by,

IEEE	IEEE-488 parameters menu

Press “SET” to enter the menu.

6.14.1 IEEE-488 Address

The IEEE-488 interface must be configured to use the same address as the external communicating device. The address is indicated by,

AddrESS	IEEE-488 interface address

Press “SET” to access the address setting.

Add= 22	Current IEEE-488 interface address

Adjust the value with “UP” or “DOWN” and then use “SET” to set the address to the displayed value.

Add= 15	New IEEE-488 interface address

6.15 Calibration Parameters

The operator of the controller has access to a number of the calibration and setup constants, namely CTO, C0, CG, H, and L. The calibration values are set at the factory and must not be altered. The correct values are important to the accuracy of the bath. Access to these parameters is available to the user only so that in the event that the controller’s memory fails the user may restore these values to the factory settings. The user should have a list of these constants and their settings with the manual.

원문: Fluke Calibration 3125 2100 설명서 · 제조사 원문 자료입니다. 사양은 제조사 사정에 따라 변경될 수 있습니다.

we measure, we calibrate, we validate.
㈜테솔 · www.tessol.com TS-TL-FLK-003 47 / 70
KOLAS 국제공인교정기관 · ISO/IEC 17025

TESSOL Technical Library
TS-TL-FLK-003

The calibration parameters menu is indicated by,

CAL	Calibration parameters menu

Press “SET” five times to enter the menu.

6.15.1 CTO

Parameter CTO sets the calibration of the over-temperature cutout. This is not adjustable by software but is adjusted with an internal potentiometer.

6.15.2 CO and CG

These parameters calibrate the accuracy of the bath set-point. These are programmed at the factory when the bath is calibrated. Do not alter the value of these parameters. If the user desires to calibrate the bath for improved accuracy then calibrate R0 and ALPHA according to the procedure given in Section 8.

If the temperature range (set by the H and L parameters) is limited then the calibration constants appear as B0 and BG.

CO (B0) and CG (BG) are not used if the controller is configured to operate with a thermistor probe.

6.15.3 H and L

These parameters set the upper and lower set-point limits of the bath. These parameters should not be set beyond the safe operating temperature limits of the system.

6.16 Operation Summary

A complete flowchart of controller operation is shown in Figure 6. This chart may be reproduced and used as a reference and operating guide.

원문: Fluke Calibration 3125 2100 설명서 · 제조사 원문 자료입니다. 사양은 제조사 사정에 따라 변경될 수 있습니다.

Chapter 7
Digital Communication Interface

The 2100 controller is capable of communicating with and being controlled by other equipment through the digital interface. The RS-232 serial interface is standard. The IEEE-488 (GPIB) interface can be included as an option.

Hart recommends the use of shielded RS-232 and IEEE-488 (GPIB) cables for all remote communication.

7.1 Serial Communications

The controller comes installed with an RS-232 serial interface that allows serial digital communications over fairly long distances. With the serial interface the user may access any of the functions, parameters and settings discussed in Chapter 7 with the exception of the BAUD rate setting. The serial interface operates with 8 data bits, 1 stop bit, and no parity.

원문: Fluke Calibration 3125 2100 설명서 · 제조사 원문 자료입니다. 사양은 제조사 사정에 따라 변경될 수 있습니다.

7.1.1 Wiring

The serial communications cable attaches to the controller through the DB-9 connector on the back panel. Figure 8 shows the pin-out of this connector and suggested cable wiring. To eliminate noise, the serial cable should be shielded with low resistance between the connector (DB-9) and the shield.

7.1.2 Setup

Before operation, the serial interface must first be set up by programming the baud rate and other configuration parameters. These parameters are programmed within the serial interface menu.

To enter the serial parameter programming mode first press “EXIT” while pressing “SET” and release to enter the secondary menu. Press “SET” repeatedly until the display reads “ProbE”. This is the menu selection. Press “UP” repeatedly until the serial interface menu is indicated with “SErIAL”. Finally press “SET” to enter the serial interface parameters menu. In the serial interface parameters menu are the baud rate, sample rate, duplex mode, and linefeed parameters.

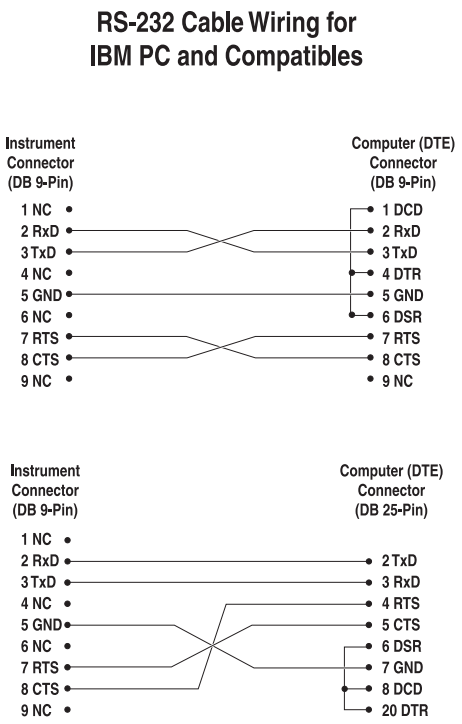

Figure 8. Serial Interface Cable Wiring

7.1.2.1 Baud Rate

The baud rate is the first parameter in the menu. The display will prompt with the baud rate parameter by showing “BAUd”. Press “SET” to choose to set the baud rate. The current baud rate value will then be displayed. The baud rate of the serial communications may be programmed to 300, 600, 1200, or 2400 baud. The baud rate is pre-programmed to 1200 baud. Use “UP” or “DOWN” to change the baud rate value. Press “SET” to set the baud rate to the new value or “EXIT” to abort the operation and skip to the next parameter in the menu.

7.1.2.2 Sample Period

The sample period is the next parameter in the menu and prompted with “SAmPLE”. The sample period is the time period in seconds between temperature measurements transmitted from the serial interface. If the sample rate is set to 5 for instance then the controller will transmit the current measurement over the serial interface approximately every five seconds. The automatic sampling is disabled with a sample period of 0. Press “SET” to choose to set the sample period. Adjust the period with “UP” or “DOWN” and then use “SET” to set the sample rate to the displayed value.

원문: Fluke Calibration 3125 2100 설명서 · 제조사 원문 자료입니다. 사양은 제조사 사정에 따라 변경될 수 있습니다.

7.1.2.3 Duplex Mode

The next parameter is the duplex mode indicated with “dUPL”. The duplex mode may be set to half duplex (“HALF”) or full duplex (“FULL”). With full duplex any commands received by the bath via the serial interface will be immediately echoed or transmitted back to the device of origin. With half duplex the commands will be executed but not echoed. The default setting is full duplex. The mode may be changed using “UP” or “DOWN” and pressing “SET”.

7.1.2.4 Linefeed

The final parameter in the serial interface menu is the linefeed mode. This parameter enables (“On”) or disables (“OFF”) transmission of a linefeed character (LF, ASCII 10) after transmission of any carriage-return. The default setting is with linefeed on. The mode may be changed using “UP” or “DOWN” and pressing “SET”.

7.1.3 Serial Operation

Once the cable has been attached and the interface set up properly the controller will immediately begin transmitting temperature readings at the programmed rate. The serial interface operates with 8 data bits, 1 stop bit, and no parity. The set-point and other commands may be sent to the bath via the serial interface to set the controller and view or program the various parameters. The interface commands are discussed in Section 7.3. All commands are ASCII character strings terminated with a carriage-return character (CR, ASCII 13).

7.2 IEEE-488 Communication (optional)

The IEEE-488 interface is available as an option. Controllers supplied with this option may be connected to a GPIB type communication bus which allows many instruments to be connected and controlled simultaneously. To eliminate noise, the GPIB cable should be shielded.

7.2.1 Setup and Address Selection

To use the IEEE-488 interface first connect an IEEE-488 standard cable to the back of the bath.

Next set the device address. This parameter is programmed within the IEEE-488 interface menu. To enter the IEEE-488 parameter programming menu first press “EXIT” while pressing “SET” and release to enter the secondary menu. Press “SET” repeatedly until the display reaches “PrObE”. This is the menu selection. Press “UP” repeatedly until the IEEE-488 interface menu is indicated with “IEEE”. Press “SET” to enter the IEEE-488 parameter menu. The IEEE-488 menu contains the IEEE-488 address parameter.

원문: Fluke Calibration 3125 2100 설명서 · 제조사 원문 자료입니다. 사양은 제조사 사정에 따라 변경될 수 있습니다.

The IEEE-488 address is prompted with “AddrESS”. Press “SET” to program the address. The default address is 22. Change the device address of the bath if necessary to match the address used by the communication equipment by pressing “UP” or “DOWN” and then “SET”.

7.2.2 IEEE-488 Operation

Commands may now be sent via the IEEE-488 interface to read or set the temperature or access other controller functions. All commands are ASCII character strings and are terminated with a carriage-return (CR, ASCII 13). Interface commands are listed below.

7.3 Interface Commands

The various commands for accessing the controller functions via the digital interfaces are listed in this section (see Table 3). These commands are used with both the RS-232 serial interface and the IEEE-488 GPIB interface. In either case the commands are terminated with a carriage-return character. The interface makes no distinction between upper and lower case letters, hence either may be used. Commands may be abbreviated to the minimum number of letters which determines a unique command. A command may be used to either set a parameter or display a parameter depending on whether or not a value is sent with the command following a “ =” character. For example “s” < CR > will return the current set-point and “s=50.00” <CR> will set the set-point (set-point 1) to 50.00 degrees.

In the following list of commands, characters or data within brackets, “[” and “]”, are optional for the command. A slash, “/”, denotes alternate characters or data. Numeric data, denoted by “n”, may be entered in decimal or exponential notation. Characters are shown in lower case although upper case may be used. Spaces may be added within command strings and will simply be ignored. Backspace (BS, ASCII 8) may be used to erase the previous character. A terminating CR is implied with all commands.

원문: Fluke Calibration 3125 2100 설명서 · 제조사 원문 자료입니다. 사양은 제조사 사정에 따라 변경될 수 있습니다.

TS-TL-FLK-003

we measure, we calibrate, we validate.
㈜테솔 · www.tessol.com TS-TL-FLK-003 52 / 70
KOLAS 국제공인교정기관 · ISO/IEC 17025

Table 3. 2100 Controller Communications Commands

Command Description	Command Format	Command Example	Returned	Returned Example	Acceptable Values
Display Temperature					
Read current set-point	s[etpoint]	s	set: 9999.99 {C or F}	set: 150.00 C	
Set current set-point to n	s[etpoint]=n	s=450			Instrument Range
Read vernier	v[ernier]	v	v: 9.99999	v: 0.00000	
Set vernier to n	v[ernier]=n	v=.00001			Depends on Configuration
Read temperature	t[emperature]	t	t: 9999.99 {C or F}	t: 55.69 C	
Read temperature units	u[nits]	u	u: x	u: c	
Set temperature units:	**u[nits]=c/f**				C or F
Set temperature units to Celsius	u[nits]=c	u=c			
Set temperature units to Fahrenheit	u[nits]=f	u=f			
Secondary Menu					
Read proportional band setting	pr[op-band]	pr	pr: 999.9	pr: 15.9	
Set proportional band to *n*	pr[op-band]=n	pr=8.83			Depends on Configuration
Read cutout setting	c[utout]	c	c: 9999 {x},{xxx}	c: 620 C, in	
Set cutout setting:	**c[utout]=n/r[eset]**				
Set cutout to *n* degrees	c[utout]=n	c=500			Temperature Range
Reset cutout now	c[utout]=r[eset]	c=r			
Read heater power (duty cycle)	po[wer]	po	po: 9999	po: 1	
Configuration Menu					
Probe Menu					
Read R0 calibration parameter	r[0]	r	r0: 999.999	r0: 100.578	
Set R0 calibration parameter to *n*	r[0]=n	r=100.324			98.0 to 104.9
Read ALPHA calibration parameter	al[pha]	al	al: 9.9999999	al: 0.0038573	
Set ALPHA calibration parameter to *n*	al[pha]=n	al=0.0038433			.00370 to .00399

원문: Fluke Calibration 3125 2100 설명서 · 제조사 원문 자료입니다. 사양은 제조사 사정에 따라 변경될 수 있습니다.

Table 3. 2100 Controller Communications Commands continued

Command Description	Command Format	Command Example	Returned	Returned Example	Acceptable Values
Available only with Thermistor configuration					
Read D0 calibration parameter	*d0	*d0	d0: 99.999	d0: –25.299	
Set D0 calibration parameter to *n*	*dc0=n	*d0=-25.299			–999.9 to 999.9
Read DG calibration parameter	*dg	*dg	dg: 999.99	dg: 186.974	
Set DG calibration parameter to *n*	*dg=n	*dg=186.974			–999.9 to 999.9
Operating Parameters Menu					
Read cutout mode	cm[ode]	cm	cm: {xxxx}	cm: AUTO	
Set cutout mode:	**cm[ode]=r[eset]/a[uto]**				RESET or AUTO
Set cutout to be reset manually-	cm[ode]=r[eset]	cm=r			
Set cutout to be reset automatically	cm[ode]=a[uto]	cm=a			
Serial Interface Menu					
Read serial sample setting	sa[mple]	sa	sa: 9	sa: 1	
Set serial sampling setting to *n* seconds	sa[mple]=n	sa=0			0 to 4000
Set serial duplex mode:	**du[plex]=f[ull]/h[alf]**				FULL or HALF
Set serial duplex mode to full	du[plex]=f[ull]	du=f			
Set serial duplex mode to half	du[plex]=h[alf]	du=h			
Set serial linefeed mode:	**lf[eed]=on/of[f]**				ON or OFF
Set serial linefeed mode to on	lf[eed]=on	lf=on			
Set serial linefeed mode to off	lf[eed]=of[f]	lf=of			
Calibration Menu					
Available with PRT configuration					
Read C0 calibration parameter	*c0	*c0	c0: 9	c0: 0	
Set C0 calibration parameter to *n*	*c0=n	*c0=0			–999.9 to 999.9
Read CG calibration parameter	*cg	*cg	cg: 999.99	cg: 406.25	
Set CG calibration parameter to *n*	*cg=n	*cg=406.25			–999.9 to 999.9
Read B0 calibration parameter	*b0	*b0	b0: 9	b0: 0	
Set B0 calibration parameter to *n*	*b0=n	*b0=0			–999.9 to 999.9
Read BG calibration parameter	*bg	*bg	bg: 999.99	bg: 156.25	
Set BG calibration parameter to *n*	*bg=n	*bg=156.25			–999.9 to 999.9
Read low set-point limit value	*tl[ow]	*tl	tl: 999	tl: –80	
Set low set-point limit to *n*	*tl[ow]=n	*tl=-80			–999.9 to 999.9
Read high set-point limit value	*th[igh]	*th	th: 999	th: 205	
Set high set-point limit to *n*	*th[igh]=n	*th=205			–999.9 to 999.9

원문: Fluke Calibration 3125 2100 설명서 · 제조사 원문 자료입니다. 사양은 제조사 사정에 따라 변경될 수 있습니다.

Table 3. 2100 Controller Communications Commands continued

Command Description	Command Format	Command Example	Returned	Returned Example	Acceptable Values
Miscellaneous (not on menus)					
Read firmware version number	*ver[sion]	*ver	ver.9999,9.99	ver.2100,3.56	
Read structure of all commands	h[elp]	h	list of commands		
Legend:	[] Optional Command data				
	{} Returns either information				
	n Numeric data supplied by user				
	9 Numeric data returned to user				
	x Character data returned to user				
Note:	When DUPLEX is set to FULL and a command is sent to READ, the command is returned followed by a carriage return and linefeed. Then the value is returned as indicated in the RETURNED column.				

원문: Fluke Calibration 3125 2100 설명서 · 제조사 원문 자료입니다. 사양은 제조사 사정에 따라 변경될 수 있습니다.

7-8

원문: Fluke Calibration 3125 2100 설명서 · 제조사 원문 자료입니다. 사양은 제조사 사정에 따라 변경될 수 있습니다.

Chapter 8
Calibration Procedure

In some instances the user may want to calibrate the controller to improve the temperature set-point accuracy. Calibration is done by adjusting the controller probe calibration constants R0 and ALPHA or D0 and DG for thermistor probes so that the process temperature as measured with a standard thermometer agrees more closely with the set-point. The thermometer used must be able to measure the temperature with higher accuracy than the desired accuracy of the system.

8.1 RTD Probe Calibration

8.1.1 Calibration Points

In calibrating the bath R0 and ALPHA are adjusted to minimize the set-point error at each of two different temperatures. Any two reasonably separated temperatures may be used for the calibration however best results will be obtained when using temperatures which are just within the most useful operating range of the system. The further apart the calibration temperatures the larger will be the calibrated temperature range but the calibration error will also be greater the range. If for instance 50 °C and 150 °C are chosen as the calibration temperatures then the bath may achieve an accuracy of say ±0.03 °C over the range 40 to 160 °C. Choosing 80 °C and 120 °C may allow the bath to have a better accuracy of maybe ±0.01 °C over the range 75 to 125 °C but outside that range the accuracy may be only ±0.05 °C.

원문: Fluke Calibration 3125 2100 설명서 · 제조사 원문 자료입니다. 사양은 제조사 사정에 따라 변경될 수 있습니다.

8.1.2 Measuring the Set-point Error

The first step in the calibration procedure is to measure the temperature errors (including sign) at the two calibration temperatures. First set the temperature to the lower set-point which we will call t_L. Wait for the system to reach the set-point and allow 15 minutes to stabilize at that temperature. Check the stability with the thermometer. When both the system and the thermometer have stabilize measure the system temperature with the thermometer and compute the temperature error err_L which is the actual temperature minus the set-point temperature. If for example the temperature is set for a lower set-point of t_L =50 °C and the bath reaches a measured temperature of 49.7 °C then the error is –0.3 °C.

Next, set the temperature for the upper set-point t_H and after stabilizing measure the temperature and compute the error err_H. For our example we will suppose the temperature was set for 150 °C and the thermometer measured 150.1 °C giving an error of +0.1 °C.

8.1.3 Computing R0 and ALPHA

Before computing the new values for R_0 and ALPHA the current values must be known. The values may be found by either accessing the probe calibration menu from the controller panel or by inquiring through the digital interface.

The user should keep a record of these values in case they may need to be restored in the future. The new values R_0' and ALPHA′ are computed by entering the old values for R_0 and ALPHA, the calibration temperature set-points t_L and t_H, and the temperature errors err_L and err_H into the following equations,

$$R_0' = \left[\frac{err_H t_L - err_L t_H}{t_H - t_L} ALPHA + 1\right] R0$$

$$ALPHA' = \left[\frac{(1 + ALPHA\, t_H) err_L - (1 + ALPHA\, t_L) err_H}{t_H - t_L}\right] ALPHA$$

If for example R_0 and ALPHA were previously set for 100.000 and 0.0038500 respectively and the data for t_L, t_H, err_L, and err_H were as given above then the new values R0′ and ALPHA′ would be computed as 100.193 and 0.0038272 respectively. Program the new values R0 and ALPHA into the controller. Check the calibration by setting the temperature to t_L and t_H and measuring the errors again. If desired the calibration procedure may be repeated again to further improve the accuracy.

원문: Fluke Calibration 3125 2100 설명서 · 제조사 원문 자료입니다. 사양은 제조사 사정에 따라 변경될 수 있습니다.

8.2 Calibration Example

The controller is to be used between 75 and 125 °C and it is desired to calibrate the system as accurately as possible for operation within this range. The current values for R0 and ALPHA are 100.000 and 0.0038500 respectively. The calibration points are chosen to be 80.00 and 120.00 °C. The measured temperatures are 79.843 and 119.914 °C respectively. Refer to Figure 9 for applying equations to the example data and computing the new probe constants.

8.3 Thermistor Probe Calibration

8.3.1 Calibration Points

In calibrating the bath DO and DG are adjusted to minimize the set-point error at each of two different temperatures. Any two reasonably separated temperatures may be used for the calibration however best results will be obtained when using temperatures which are just within the most useful operating range of the system. The farther apart the calibration temperatures the larger will be the calibrated temperature range but the calibration error will also be greater over the range. If for instance 20 °C and 80 °C are chosen as the calibration temperatures then the controller may achieve an accuracy of say ±0.2 °C over the range 20 to 80 °C. Choosing 30 °C and 70 °C may allow the controller to have a better accuracy of maybe ±0.05 °C over the range 30 to 70 °C but outside that range the accuracy may be only ±0.5 °C.

원문: Fluke Calibration 3125 2100 설명서 · 제조사 원문 자료입니다. 사양은 제조사 사정에 따라 변경될 수 있습니다.

R0 = 100.000

ALPHA = 0.0038500

t_L = 80.00 °C

measured t = 79.843 °C

t_H = 120.00 °C

measured t = 119.914 °C

Compute Errors,

err_L = 79.843 – 80.00 °C = –0.157 °C

err_H = 119.914 – 120.00 °C = –0.086 °C

Compute R0,

$$R0' = \left[\frac{(-0.086)\times 80.0-(-0.157)\times 120.0}{120.0-80.0}0.00385+1\right]100.000 = 100.115$$

$$ALPHA' = \left[\frac{(1+0.00385\times 120.0)(-0.157)-(1+0.00385\times 80.0)(-0.086)}{120.0-80.0}+1\right]0.00385 = 0.0038387$$

Figure 9. Calibration Example — Platinum RTD Probe

8.3.2 Measuring the Set-point Error

The first step in the calibration procedure is to measure the temperature errors (including sign) at the two calibration temperatures. First set the controller to the lower set-point which we will call t_L. Wait for the system to reach the set-point and allow 15 minutes to stabilize at that temperature. Check the stability with the thermometer. When both the system and the thermometer have stabilized measure the system temperature with the thermometer and compute the temperature error err_L which is the actual temperature minus the set-point temperature. If for example the controller is set for a lower set-point of t_L =20 °C and the system reaches a measured temperature of 19.7 °C then the error is –0.3 °C.

Next, set the controller for the upper set-point t_H and after stabilizing measure the temperature and compute the error err_H. For our example we will suppose the temperature was set for 80 °C and the thermometer measured 80.1 °C giving an error of +0.1 °C.

원문: Fluke Calibration 3125 2100 설명서 · 제조사 원문 자료입니다. 사양은 제조사 사정에 따라 변경될 수 있습니다.

8.3.3 Computing DO and DG

Before computing the new values for DO and DG the current values must be known. The values may be found by either accessing the probe calibration menu from the controller panel or by inquiring through the digital interface. The user should keep a record of these values in case they may need to be restored in the future. The new values DO ′ and DG ′ are computed by entering the old values for DO and DG, the calibration temperature set-points tL and tH, and the temperature errors err_L and err_H into the following equations,

$$D0' = \frac{err_H(t_L - D0) - err_L(t_H - D0)}{t_L - t_H} + D0$$

$$DG' = \left[\frac{err_L - err_H}{t_L - t_H} + 1\right] DG$$

If for example DO and DG were previously set for –25.229 and 186.9740 respectively and the data for t_L, t_H, err_L, and err_H were as given above then the new values DO ′ and DG ′ would be computed as –24.880 and 185.728 respectively. Program the new values DO and DG into the controller. The new constants will be used the next time the bath temperature is set. Check the calibration by setting the temperature to t_L and t_H and measuring the errors again. If desired the calibration procedure may be repeated again to further improve the accuracy.

8.3.4 Calibration Example

The system is to be used between 25 and 75 °C and it is desired to calibrate the controller as accurately as possible for operation within this range. The current values for DO and DG are –25.229 and .0028530 respectively. The calibration points are chosen to be 25.00 and 75.00 °C. The measured bath temperatures are 24.869 and 74.901 °C respectively. Refer to Figure 10 for applying equations to the example data and computing the new probe constants.

원문: Fluke Calibration 3125 2100 설명서 · 제조사 원문 자료입니다. 사양은 제조사 사정에 따라 변경될 수 있습니다.

R0 = 100.000

ALPHA = 0.0038500

t_L = –10.00 °C

measured t = –9.943 °C

t_H = 50.00 °C

measured t = 49.874 °C

Compute errors,

err_L = –9.943 – (–10.00 °C) = 0.057 °C

err_H = 49.874 – 50.00 °C = –0.126 °C

Compute R0,

$$R0' = \left[\frac{(-0.126)\times(-10.0)-(0.57)\times 50.0}{50.0-(-10.0)}0.00385+1\right]100.000 = 99.9898$$

Compute ALPHA,

$$ALPHA' = \left[\frac{(1+0.00385\times 50.0)(-0.057)-(1+0.00385\times(-10.0))(-0.126)}{50.0-(-10.0)}+1\right]0.00385 = 0.0038621$$

Figure 10. Calibration Example — Thermistor Probe

원문: Fluke Calibration 3125 2100 설명서 · 제조사 원문 자료입니다. 사양은 제조사 사정에 따라 변경될 수 있습니다.

Chapter 9
Maintenance

9.1 Maintenance

The controller has been designed with the utmost care. Ease of operation and simplicity of maintenance have been a central theme in the product development. Therefore, with proper care the instrument should require very little maintenance. Avoid operating the instrument in dirty or dusty environments. If the unit must be used in a dusty environment, the controller can be sealed at the seams with a silicone sealant. Sealing the controller protects the electrical components.

- A battery is used to maintain operating parameters in the unit. All operating parameters, including calibration parameters should be checked on a regular basis to insure accuracy and proper operation of the instrument. See the troubleshooting section for the procedure on checking the status of the battery.
- If the outside of the controller becomes soiled, it may be wiped clean with a damp cloth and mild detergent. Do not use harsh chemicals on the surface which may damage the paint.
- If a hazardous material is spilt on or inside the equipment, the user is responsible for taking the appropriate decontamination steps as outlined by the national safety council with respect to the material. MSDS sheets applicable to all fluids used in the baths should be kept in close proximity to the instrument.

원문: Fluke Calibration 3125 2100 설명서 · 제조사 원문 자료입니다. 사양은 제조사 사정에 따라 변경될 수 있습니다.

- If the mains supply cord becomes damaged, replace it with a cord with the appropriate gauge wire for the current of the system. If there are any questions, call Hart Scientific Customer Service for more information.
- Before using any cleaning or decontamination method except those recommended by Hart, users should check with Hart Scientific Customer Service to be sure that the proposed method will not damage the equipment.
- If the instrument is used in a manner not in accordance with the equipment design, the operation of the bath may be impaired or safety hazards may arise.

The over-temperature cutout should be checked every 6 months to see that it is working properly. In order to check the user selected cutout, follow the controller directions (Section 6.8) for setting the cutout. Both the manual and the auto reset option of the cutout should be checked. Set the bath temperature higher than the cutout. Check to see if the display flashes cutout and the temperature is decreasing.

⚠ WARNING:

When checking the over-temperature cutout, be sure that the temperature limits of the bath fluid are not exceeded. Exceeding the temperature limits of the bath fluid could cause harm to the operator, lab, and instrument.

원문: Fluke Calibration 3125 2100 설명서 · 제조사 원문 자료입니다. 사양은 제조사 사정에 따라 변경될 수 있습니다.

Chapter 10
Troubleshooting

This section contains information on troubleshooting.

10.1 Troubleshooting

In the event that the instrument appears to function abnormally, this section may help to find and solve the problem. Several possible problem conditions are described along with likely causes and solutions. If a problem arises, please read this section carefully and attempt to understand and solve the problem. If the problem cannot otherwise be solved, contact an Authorized Service Center (see Section 1.4) for assistance. Be sure to have the instrument model number, serial number, voltage, and problem description available.

⚠ *NOTE:*

It is assumed that the controller is being used to control a calibration bath.

Problem	Causes and Solutions
The heater indicator LED stays red but the temperature does not increase	The problem may be either insufficient heating or no heating at all. Insufficient heating may be caused by the amount of cooling to the system being greater than the amount of heat the heater is capable of supplying. Check that the heater is operational using a clamp-on ammeter to measure the current to the heater. If the heater is receiving current but not heating enough, either replace the heater with one of greater rating (not to exceed specifications of instrument) or decrease the amount of cooling to the system. If the heater is not receiving power at all, use a voltmeter to verify that voltage is present at the heater socket at the back of the controller. If voltage is present, check the heater for correct wiring. An ohmmeter may help to find a discontinuity in the wiring. Check for a shorted heater. The solid- state relay may not be operating properly.

원문: Fluke Calibration 3125 2100 설명서 · 제조사 원문 자료입니다. 사양은 제조사 사정에 따라 변경될 수 있습니다.

The controller display flashes “Cut-out” and the heater does not operate	The display flashes “Cut-out” alternately with the process temperature. If the process temperature displayed seems grossly in error, consult the following problem: ‘The display flashes “Cut-out” and an incorrect process temperature’. Normally, the cutout disconnects power to the heater when the bath temperature exceeds the cutout set-point causing the temperature to drop back down to a safe value. If the cutout mode is set to “AUTO”, the heater switches back on when the temperature drops. If the mode is set to “RESET”, the heater only comes on again when the temperature is reduced and the cutout is manually reset by the operator, see Section 6.8, Cutout. Check that the cutout set-point is adjusted to 10 or 20 °C above the maximum bath operating temperature and that the cutout mode is set as desired. If the cutout activates when the bath temperature is well below the cutout set-point or the cutout does not reset when the bath temperature drops and it is manually reset, then the cutout circuitry or the cutout thermocouple sensor may be faulty or disconnected.
The display flashes “Cut-out” and an incorrect process temperature	The problem may be that the controller’s voltmeter circuit is not functioning properly. A problem with the thermocouple probe, the cutout operation, or the cut-out circuitry may cause the cutout to remain in this condition. Check that the thermocouple probe is plugged into the controller and wired correctly. Check that the probe temperature is well below the programmed set-point. If not then reset the cutout temperature to a value well above the probe temperature or wait for the temperature to cool well below the cutout set-point. If the cutout is set for manual reset mode then after the temperature cools the user must also manually reset the cutout according to the directions in this manual under Section 6.8, Cutout. If the probe is not connected to the controller, either plug in the appropriate thermocouple probe into the cutout probe socket or use a wire jumper inserted into the socket to short the input to simulate a probe at ambient temperature. A problem could exist with the memory back-up battery. If the battery voltage is insufficient to maintain the memory, data may become scrambled causing problems. A nearby large static discharge may also affect data in memory. Verify that the parameters on the Report of Test. are accurate. Cycle the power off, disconnect the bath from AC, and then restart the bath. If the problem reoccurs, the battery should be replaced. Contact an Authorized Service Center (see Section 1.4) for assistance. If initializing the memory does not remedy the problem, there may be a failed electronic component. The controller may need to be reset. Perform the Factory Reset Sequence described below.

10-2

원문: Fluke Calibration 3125 2100 설명서 · 제조사 원문 자료입니다. 사양은 제조사 사정에 따라 변경될 수 있습니다.

	Factory Reset Sequence. Hold the SET and EXIT buttons down at the same time while powering up the instrument. The instrument display shows '-init-', the model number, and the firmware version. Each of the controller parameters and calibration constants must be reprogrammed. The values can be found on the Report of Test that was shipped with the instrument.
The displayed process temperature is in error and the controller remains in the cooling or heating state at any set-point value	Possible causes may be either a faulty control probe or erroneous data in memory. The probe may be disconnected, shorted, burned out, wired incorrectly, or incompatible with the controller. Check that the probe is connected properly. If wired properly, and using a 100 ohm RTD, the probe may be checked with an ohmmeter to see if it is open or shorted. The probe is a platinum 4-wire Din 43760 type. The resistance should read 0.2 to 2.0 ohms between pins 1 and 2 on the probe connector and 0.2 to 2.0 ohms between pins 3 and 4. It should read 100 to 300 ohms between pins 1 and 4 depending on the temperature. If the probe appears to be defective, contact an Authorized Service Center (see Section 1.4) for assistance. If the problem is not the probe, erroneous data in memory may be the cause. Re-initialize the memory as discussed in the problem 'The display flashes "Cut-out" and an incorrect process temperature'. If the problem remains, the cause may be a defective electronic component. Verify that the probe is of the correct type for which the controller was configured to use. The controller configuration may be checked by watching the controller display as the power is switched on. The display briefly flashes "CP-1", "Pt LO", or "Pt HI". Flashing "CP-1" indicates the controller is configured to use a thermistor probe. "Pt LO" and "Pt HI" indicate the controller is configured to use a DIN 43760 RTD probe with the range of –100 to 200 and –100 to 600 °C, respectively. If the probe is not correct, use the correct probe. Both types of probes are available from Hart Scientific. If the configuration is not as desired, contact an Authorized Service Center.
The controller will not control above approximately 250 °C	The range for a thermistor probe is –10 to 110 °C. For an RTD probe the range is either –100 to 200 °C or –100 to 600 °C depending on the configuration as discussed in item above. If the configuration is not as desired, contact an Authorized Service Center.

원문: Fluke Calibration 3125 2100 설명서 · 제조사 원문 자료입니다. 사양은 제조사 사정에 따라 변경될 수 있습니다.

The controller controls or attempts to control at an inaccurate temperature	The controller operates normally except when controlling at a specified set-point. At this set-point, the temperature displayed does not agree with the temperature measured by the user's reference thermometer to within the specified accuracy. This problem may be caused by an actual difference in temperature between the points where the control probe and thermometer probe measure temperature, by erroneous bath calibration parameters, or by a damaged control probe. Check that the system has an adequate amount of fluid in the tank and that the stirrer is operating properly (if applicable). Check that the thermometer probe and control probe are both fully inserted into the bath to minimize temperature gradient errors. Check that the calibration parameters are all correct according to the Report of Test. If not, re-program the constants. The memory backup battery may be weak causing errors in data as described in the problem: 'The display flashes "cutout" and an incorrect process temperature'. Check that the control probe has not been struck, bent, or damaged. If the user's own probe is used, the calibration parameters, namely R0 and ALPHA, may need to be adjusted to more closely match the characteristics of the probe. Calibration assistance may be obtained from an Authorized Service Center.
The controller shows that the output power is steady, but the process temperature is unstable	Possible causes are an improper proportional band setting or the fluid being used. If the bath temperature does not achieve the expected degree of stability when measured using a thermometer, try adjusting the proportional and to a narrower width as discussed in Section 6.7, Proportional Band. Check to ensure the fluid has not deteriorated or is not too thick.
The controller alternately heats for a while then cools	The bath is not stable and the duty cycle is not constant. The proportional band being too narrow typically causes this oscillation. Increase the width of the proportional band until the temperature stabilizes as discussed in Section 6.7, Proportional Band.
The controller erratically heats then cools, control is unstable	If both the bath temperature and output power do not vary periodically but in a very erratic manner, the problem may be excess noise in the system. Noise due to the control sensor should be less than 0.001 °C. However, if the probe has been damaged or has developed an intermittent short, erratic behavior may exist. The probe is located inside the stirrer motor cover. Check for a damaged probe or poor connection between the probe and bath. Intermittent shorts in the heater or controller electronic

원문: Fluke Calibration 3125 2100 설명서 · 제조사 원문 자료입니다. 사양은 제조사 사정에 따라 변경될 수 있습니다.

	circuitry may also be a possible cause. Contact an Authorized Service Center (see Section 1.4) for assistance.
The heater heats continuously and the stirrer motor stirs sporadically or not at all	Check to see that the heater and stirrer motor are plugged into the correct sockets on the back of the unit. If not, plug them in correctly. If they are plugged in correctly, call an Authorized Service Center.
The controller does not maintain controller parameters or parameters are reset each time the power to the unit is removed	**Note:** Before performing the memory check, you need to record the controller calibration parameters (found in the CAL menu of the instrument) and any user-adjusted parameters that you have changed (such as the programmable set points and proportional band). **Memory Check** Doing a memory check is the easiest way to verify the ability of the battery to maintain controller parameters. 1. Power off the instrument. 2. Disconnect the instrument from AC power for 10 seconds. 3. Reconnect the AC power and power on the instrument. 4. If the display shows InIT and/or the cycle count shows a low number such as 0002, the battery is spent and should be replaced. Contact an Authorized Service Center for assistance. 5. After replacing the battery, you must reprogram the calibration and user-adjustable parameters into the controller.

10.2 Comments

10.2.1 EMC Directive

Hart Scientifics' equipment has been tested to meet the European Electromagnetic Compatibility Directive (EMC Directive, 89/336/EEC). The Declaration of Conformity for your instrument lists the specific standards to which the unit was tested.

10.2.2 Low Voltage Directive (Safety)

In order to comply with the European Low Voltage Directive (73/23/EEC), Hart Scientific equipment has been designed to meet the IEC 1010-1 (EN61010-1) and the IEC 1010-2-010 (EN 61010-2-010) standards.

원문: Fluke Calibration 3125 2100 설명서 · 제조사 원문 자료입니다. 사양은 제조사 사정에 따라 변경될 수 있습니다.

10-6

원문: Fluke Calibration 3125 2100 설명서 · 제조사 원문 자료입니다. 사양은 제조사 사정에 따라 변경될 수 있습니다.