FLUKE®
Calibration

7009
Calibration Bath
User's Guide

7009____ugeng0000

원문: Fluke Calibration 7009/7108/7015 7009 설명서 · 제조사 원문 자료입니다. 사양은 제조사 사정에 따라 변경될 수 있습니다.

Limited Warranty & Limitation of Liability

Each product from Fluke Corporation ("Fluke") is warranted to be free from defects in material and workmanship under normal use and service. The warranty period is one year for the Calibration Bath. The warranty period begins on the date of the shipment. Parts, product repairs, and services are warranted for 90 days. The warranty extends only to the original buyer or end-user customer of a Fluke authorized reseller, and does not apply to fuses, disposable batteries or to any other product, which in Fluke's opinion, has been misused, altered, neglected, or damaged by accident or abnormal conditions of operation or handling. Fluke warrants that software will operate substantially in accordance with its functional specifications for 90 days and that it has been properly recorded on non-defective media. Fluke does not warrant that software will be error free or operate without interruption. Fluke does not warrant calibrations on the Calibration Bath.

Fluke authorized resellers shall extend this warranty on new and unused products to end-user customers only but have no authority to extend a greater or different warranty on behalf of Fluke. Warranty support is available if product is purchased through a Fluke authorized sales outlet or Buyer has paid the applicable international price. Fluke reserves the right to invoice Buyer for importation costs of repairs/replacement parts when product purchased in one country is submitted for repair in another country.

Fluke's warranty obligation is limited, at Fluke's option, to refund of the purchase price, free of charge repair, or replacement of a defective product which is returned to a Fluke authorized service center within the warranty period.

To obtain warranty service, contact your nearest Fluke authorized service center or send the product, with a description of the difficulty, postage, and insurance prepaid (FOB Destination), to the nearest Fluke authorized service center. Fluke assumes no risk for damage in transit. Following warranty repair, the product will be returned to Buyer, transportation prepaid (FOB Destination). If Fluke determines that the failure was caused by misuse, alteration, accident or abnormal condition or operation or handling, Fluke will provide an estimate or repair costs and obtain authorization before commencing the work. Following repair, the product will be returned to the Buyer transportation prepaid and the Buyer will be billed for the repair and return transportation charges (FOB Shipping Point).

THIS WARRANTY IS BUYER'S SOLE AND EXCLUSIVE REMEDY AND IS IN LIEU OF ALL OTHER WARRANTIES, EXPRESS OR IMPLIED, INCLUDING BUT NOT LIMITED TO ANY IMPLIED WARRANTY OF MERCHANTABILITY OR FITNESS FOR A PARTICULAR PURPOSE. Fluke SHALL NOT BE LIABLE FOR ANY SPECIAL, INDIRECT, INCIDENTAL. OR CONSEQUENTIAL DAMAGES OR LOSSES, INCLUDING LOSS OF DATA, WHETHER ARISING FROM BREACH OF WARRANTY OR BASED ON CONTRACT, TORT, RELIANCE OR ANY OTHER THEORY.

Since some countries or states do not allow limitation of the term of an implied warranty, or exclusion or limitation of incidental or consequential damages, the limitations and exclusions of this warranty may not apply to every buyer. If any provision of this Warranty is held invalid or unenforceable by a court of competent jurisdiction, such holding will not affect the validity or enforceability of any other provision.

Fluke Corporation
799 E. Utah Valley Drive • American Fork, UT 84003-9775 • USA
Phone: +1.801.763.1600 • Telefax: +1.801.763.1010
E-mail: support@hartscientific.com

Subject to change without notice. • Copyright © 2010• Printed in USA

원문: Fluke Calibration 7009/7108/7015 7009 설명서 · 제조사 원문 자료입니다. 사양은 제조사 사정에 따라 변경될 수 있습니다.

Table of Contents

1 Before You Start 1

1.1 Symbols Used 1

1.2 Safety Information 2

1.2.1 Warnings 2

1.2.2 Cautions 4

1.3 Fluke Authorized Service Centers 5

2 Introduction 7

3 Specifications and Environmental Conditions 9

3.1 Specifications 9

3.2 Environmental Conditions 9

4 Quick Start 11

4.1 Set Up 11

4.2 Power 11

4.3 Setting the Temperature 11

5 Installation 13

5.1 Unpacking 13

5.2 Bath Environment 13

5.3 Bath Preparation and Filling 13

5.4 Probe 14

5.5 Power 14

6 Bath Use 15

6.1 General 15

6.2 Comparison Calibration 15

6.3 Calibration of Multiple Probes 16

7 Parts and Controls 17

7.1 Front Control Panel 17

7.2 Side Panel 18

7.3 Back Panel 19

8 General Operation 21

원문: Fluke Calibration 7009/7108/7015 7009 설명서 · 제조사 원문 자료입니다. 사양은 제조사 사정에 따라 변경될 수 있습니다.

8.1 Bath Fluid . . . 21
8.1.1 Temperature Range . . . 21
8.1.2 Viscosity. . . . 21
8.1.3 Specific Heat . . . 21
8.1.4 Thermal Conductivity . . . 22
8.1.5 Thermal Expansion . . . 22
8.1.6 Electrical Conductivity . . . 22
8.1.7 Fluid lifetime . . . 22
8.1.8 Safety . . . 22
8.1.9 Cost . . . 22
8.1.10 Commonly Used Fluids . . . 22
8.1.10.1 Water . . . 23
8.1.10.2 Ethylene Glycol . . . 23
8.1.10.3 Methanol . . . 23
8.1.10.4 Mineral Oil . . . 23
8.1.10.5 Silicone Oil . . . 23
8.2 Stirring . . . 24
8.3 Power . . . 25
8.4 Heater . . . 26
8.5 Cooling . . . 26
8.6 Temperature Controller . . . 27

9 Controller Operation . . . 29
9.1 Bath Temperature . . . 29
9.2 Reset Cutout . . . 29
9.3 Temperature Set-point . . . 31
9.3.1 Programmable Set-points . . . 31
9.3.2 Set-point Value . . . 32
9.3.3 Set-point vernier . . . 32
9.4 Temperature Scale Units . . . 33
9.5 Secondary Menu. . . . 33
9.6 Heater Power . . . 34
9.7 Proportional Band . . . 34
9.8 Cutout . . . 36
9.9 Controller Configuration . . . 37
9.10 Probe Parameters Menu . . . 37
9.10.1 DO. . . . 38
9.10.2 DG. . . . 38
9.11 Operating Parameters . . . 38
9.11.1 Cutout Reset Mode . . . 38
9.12 Serial Interface Parameters . . . 39
9.12.1 BAUD Rate . . . 39
9.12.2 Sample Period. . . . 39
9.12.3 Duplex Mode . . . 40
9.12.4 Linefeed . . . 40

원문: Fluke Calibration 7009/7108/7015 7009 설명서 · 제조사 원문 자료입니다. 사양은 제조사 사정에 따라 변경될 수 있습니다.

9.13 IEEE-488 Parameters Menu . . . 41
9.13.1 IEEE-488 Address . . . 41
9.14 Calibration Parameters . . . 41
9.14.1 CTO . . . 42
9.14.2 H and L . . . 42
9.15 Command Summary . . . 42

10 Digital Communication Interface . . . 43
10.1 Serial communications . . . 43
10.1.1 Wiring . . . 43
10.1.2 Setup . . . 43
10.1.2.1 Baud Rate . . . 44
10.1.2.2 Sample Period . . . 44
10.1.2.3 Duplex Mode . . . 44
10.1.2.4 Linefeed . . . 44
10.1.3 Serial Operation . . . 44
10.2 IEEE-488 communication (optional) . . . 45
10.2.1 Setup . . . 45
10.2.1.1 IEEE-488 Interface Address . . . 45
10.2.2 IEEE-488 Operation . . . 45
10.3 Interface Commands . . . 45
10.4 Power Control Functions . . . 48
10.4.1 Heater Control . . . 48
10.4.2 Cooling Control . . . 48

11 Bath Calibration . . . 51
11.1 Calibration Points . . . 51
11.2 Measuring the Set-point Error . . . 51
11.3 Computing D0 and DG . . . 51
11.4 Calibration Example . . . 52

12 Maintenance . . . 55
12.1 Draining the Bath . . . 56

13 Troubleshooting . . . 57
13.1 Troubleshooting . . . 57

원문: Fluke Calibration 7009/7108/7015 7009 설명서 · 제조사 원문 자료입니다. 사양은 제조사 사정에 따라 변경될 수 있습니다.

Figures

Figure 1 Bath Assembly 7
Figure 2 Front Controller Panel 17
Figure 3 Side panel controls 18
Figure 4 Back Panel 20
Figure 5 Chart of various bath fluids and their properties. 24
Figure 6 Flowchart showing the various menu options. 30
Figure 7 Bath temperature fluctuation at various proportional band settings. . . . 35
Figure 8 Serial Communications Cable Wiiring 43
Figure 9 Sample calibration computations 53

원문: Fluke Calibration 7009/7108/7015 7009 설명서 · 제조사 원문 자료입니다. 사양은 제조사 사정에 따라 변경될 수 있습니다.

Tables

Table 1 International Electrical Symbols 1
Table 2 Table of various fluids and their properties. 25
Table 3 Proportional Band — Fluid Table. 35
Table 4 Interface Command Summary.. 46
Table 4 Interface Command Summary continued. 47
Table 5 Temperature Range Control Functions. 49
Table 6 Serial Power Control Functions 49

원문: Fluke Calibration 7009/7108/7015 7009 설명서 · 제조사 원문 자료입니다. 사양은 제조사 사정에 따라 변경될 수 있습니다.

1 Before You Start

1.1 Symbols Used

Table 1 lists the International Electrical Symbols. Some or all of these symbols may be used on the instrument or in this manual.

Table 1 *International Electrical Symbols*

Symbol	Description
∼	AC (Alternating Current)
≂	AC-DC
	Battery
CE	CE Complies with European Union Directives
⎓	DC
	Double Insulated
	Electric Shock
	Fuse
	PE Ground
	Hot Surface (Burn Hazard)
	Read the User's Manual (Important Information)
O	Off
I	On

원문: Fluke Calibration 7009/7108/7015 7009 설명서 · 제조사 원문 자료입니다. 사양은 제조사 사정에 따라 변경될 수 있습니다.

Symbol	Description
c US	Canadian Standards Association
CAT II	OVERVOLTAGE (Installation) CATEGORY II, Pollution Degree 2 per IEC1010-1 refers to the level of Impulse Withstand Voltage protection provided. Equipment of OVERVOLTAGE CATEGORY II is energy-consuming equipment to be supplied from the fixed installation. Examples include household, office, and laboratory appliances.
	C-TIC Australian EMC Mark
	The European Waste Electrical and Electronic Equipment (WEEE) Directive (2002/96/EC) mark.

1.2 Safety Information

Use this instrument only as specified in this manual. Otherwise, the protection provided by the instrument may be impaired.

The following definitions apply to the terms "Warning" and "Caution".

- "Warning" identifies conditions and actions that may pose hazards to the user.
- "Caution" identifies conditions and actions that may damage the instrument being used.

1.2.1 Warnings

To avoid personal injury, follow these guidelines.

GENERAL

- **DO NOT** use the instrument for any application other than calibration work. The instrument was designed for temperature calibration. Any other use of the instrument may cause unknown hazards to the user.
- **DO NOT** use the instrument in environments other than those listed in the user's guide.
- **DO NOT** overfill the bath. Overflowing extremely cold or hot fluid may be harmful to the operator. See Section 5.3, Bath Preparation and Filling, for specific instructions.
- Follow all safety guidelines listed in the user's manual.
- Calibration Equipment should only be used by Trained Personnel.
- If this equipment is used in a manner not specified by the manufacturer, the protection provided by the equipment may be impaired.
- Before initial use, or after transport, or after storage in humid or semi-humid environments, or anytime the instrument has not been energized for

원문: Fluke Calibration 7009/7108/7015 7009 설명서 · 제조사 원문 자료입니다. 사양은 제조사 사정에 따라 변경될 수 있습니다.

more than 10 days, the instrument needs to be energized for a "dry-out" period of 2 hours before it can be assumed to meet all of the safety requirements of the IEC 1010-1. If the product is wet or has been in a wet environment, take necessary measures to remove moisture prior to applying power such as storage in a low humidity temperature chamber operating at 50°C for 4 hours or more.

- Overhead clearance is required. Do not place the instrument under a cabinet or other structure. Always leave enough clearance to allow for safe and easy insertion and removal of probes.
- The instrument is intended for indoor use only.
- The bath is a precision instrument. Although it has been designed for optimum durability and trouble free operation, it must be handled with care. Position the bath before the tank is filled with fluid by rolling it into place. **DO NOT** attempt to lift the bath. **DO NOT move a bath filled with fluid.**

BURN HAZARD

- Extremely cold temperatures may be present in this equipment. Freezer burns and frostbite may result if personnel fail to observe safety precautions.
- High temperatures may be present in this equipment. Fires and severe burns may result if personnel fail to observe safety precautions.

ELECTRICAL HAZARD

- These guidelines must be followed to ensure that the safety mechanisms in this instrument will operate properly. This instrument must be plugged into a 230V AC electric outlet of the appropriate frequency. The power cord of the instrument is equipped with a three-pronged grounding plug for your protection against electrical shock hazards. It must be plugged directly into a properly grounded three-prong receptacle. The receptacle must be installed in accordance with local codes and ordinances. Consult a qualified electrician. DO NOT use an extension cord or adapter plug.
- **DO** use a ground fault interrupt device. This instrument contains a fluid. A ground fault device is advised in case fluid is present in the electrical system and could cause an electrical shock.
- Always replace the power cord with an approved cord of the correct rating and type. If you have questions, contact a Fluke Fluke Calibration Authorized Service Center (see Section 1.3).
- High voltage is used in the operation of this equipment. Severe injury or death may result if personnel fail to observe the safety precautions. Before working inside the equipment, turn off the power and disconnect the power cord.

원문: Fluke Calibration 7009/7108/7015 7009 설명서 · 제조사 원문 자료입니다. 사양은 제조사 사정에 따라 변경될 수 있습니다.

BATH FLUIDS

- Fluids used in this bath may produce noxious or toxic fumes under certain circumstances. Consult the fluid manufacturer's MSDS (Material Safety Data Sheet). Proper ventilation and safety precautions must be observed.
- The instrument is equipped with a soft cutout (user settable firmware) and a hard cutout (set at the factory). Check the flash point, boiling point, or other fluid characteristic applicable to the circumstances of the bath operation. Ensure that the soft cutout is adjusted to the fluid characteristics of the application. As a guideline, the soft cutout should be set 10°C to 15°C below the flash point of the bath fluid. See Section 8.1, Heat Transfer Fluid, for specific information on bath fluids and Section 9.8, Cutout.

1.2.2 ⚠ Cautions

To avoid possible damage to the instrument, follow these guidelines.

- Always operate this instrument at room temperature between 41°F and 122°F (5°C to 50°C). Allow sufficient air circulation by leaving at least 6 inches (15 cm) of clearance around the instrument.
- When filling the tank, ensure the immersion coils are completely covered.
- **DO NOT** overfill the bath. Overflowing fluid may damage the electrical system. See Section 5.3, Bath Preparation and Filling, for specific instructions.
- Read Section 6, Bath Use, before placing the bath into service.
- **DO NOT** turn the bath on without fluid in the tank and the heating coils fully immersed.
- **DO NOT** change the values of the bath calibration constants from the factory set values. The correct setting of these parameters is important to the safety and proper operation of the bath.
- The refrigeration may be damaged or the lifetime shortened if the set-point temperature is set above 60°C for more than one hour with the refrigeration manually on. Ensure that the refrigeration is off when the bath is used above 60°C.
- The **Factory Reset Sequence** should be performed only by authorized personnel if no other action is successful in correcting a malfunction. You must have a copy of the most recent Report of Test to restore the test parameters.
- **DO NOT** operate this instrument in an excessively wet, oily, dusty, or dirty environment.
- Most probes have handle temperature limits. Be sure that the probe handle temperature limit is not exceeded in the air above the instrument.
- The instrument and any thermometer probes used with it are sensitive instruments that can be easily damaged. Always handle these devices with care. Do not allow them to be dropped, struck, stressed, or overheated.

원문: Fluke Calibration 7009/7108/7015 7009 설명서 · 제조사 원문 자료입니다. 사양은 제조사 사정에 따라 변경될 수 있습니다.

COLD BATHS

- Refrigerated baths require that the condensing coil be cleaned periodically. Accumulation of dust and dirt on the condenser will result in premature failure of the compressor.
- This bath has been equipped with a brownout and over voltage protection device as a safety feature to protect the system components.
- **Mode of Operation:** This bath needs to be plugged into the line voltage for at least 2 minutes before operation. This is only necessary for the first time the bath is energized or when it is moved from one location to another. Turning the bath ON or OFF does not trigger the delay.
- If a High/Low voltage condition exists for longer than 5 seconds, the bath de-energizes. An amber indicator on the back panel lights when this condition exists.
- Re-energization is automatic upon correction of the fault condition and after a delay cycle of about 2 minutes. If a fault condition exists upon application of power, the bath will not energize.
- Under and Over Voltage Protection at 230 VAC
  - Voltage Cutout: ±12.5% (203 - 257 VAC)
  - Voltage Cut In: ±7.5% (213 - 247 VAC)

1.3 Fluke Authorized Service Centers

Please contact one of the following authorized Service Centers to coordinate service on your Fluke product:

Fluke Calibration

799 E. Utah Valley Drive
American Fork, UT 84003-9775
USA

Phone: +1.801.763.1600
Telefax: +1.801.763.1010
E-mail: support@Flukescientific.com

Fluke Nederland B.V.

Customer Support Services
Science Park Eindhoven 5108
5692 EC Son
NETHERLANDS

원문: Fluke Calibration 7009/7108/7015 7009 설명서 · 제조사 원문 자료입니다. 사양은 제조사 사정에 따라 변경될 수 있습니다.

Phone: +31-402-675300
Telefax: +31-402-675321
E-mail: ServiceDesk@fluke.nl

Fluke Int'l Corporation

Service Center - Instrimpex
Room 2301 Sciteck Tower
22 Jianguomenwai Dajie
Chao Yang District
Beijing 100004, PRC
CHINA

Phone: +86-10-6-512-3436
Telefax: +86-10-6-512-3437
E-mail: xingye.han@fluke.com.cn

Fluke South East Asia Pte Ltd.

Fluke ASEAN Regional Office
Service Center
60 Alexandra Terrace #03-16
The Comtech (Lobby D)
118502
SINGAPORE

Phone: +65 6799-5588
Telefax: +65 6799-5588
E-mail: antng@singa.fluke.com

When contacting these Service Centers for support, please have the following information available:

- Model Number
- Serial Number
- Voltage
- Complete description of the problem

원문: Fluke Calibration 7009/7108/7015 7009 설명서 · 제조사 원문 자료입니다. 사양은 제조사 사정에 따라 변경될 수 있습니다.

2 Introduction

The Fluke Calibration 7009 is a very precise constant temperature bath. An innovative state of the art solid-state temperature controller has been incorporated which maintains the bath temperature with extreme stability. The controller uses a microcontroller to execute the many operating functions.

User interface is provided by the 8-digit LED display and four key-switches. Digital remote communications is optionally available with a RS-232 or IEEE-488 interface.

The tank for the 7009 is stainless steel and holds 157 liters.

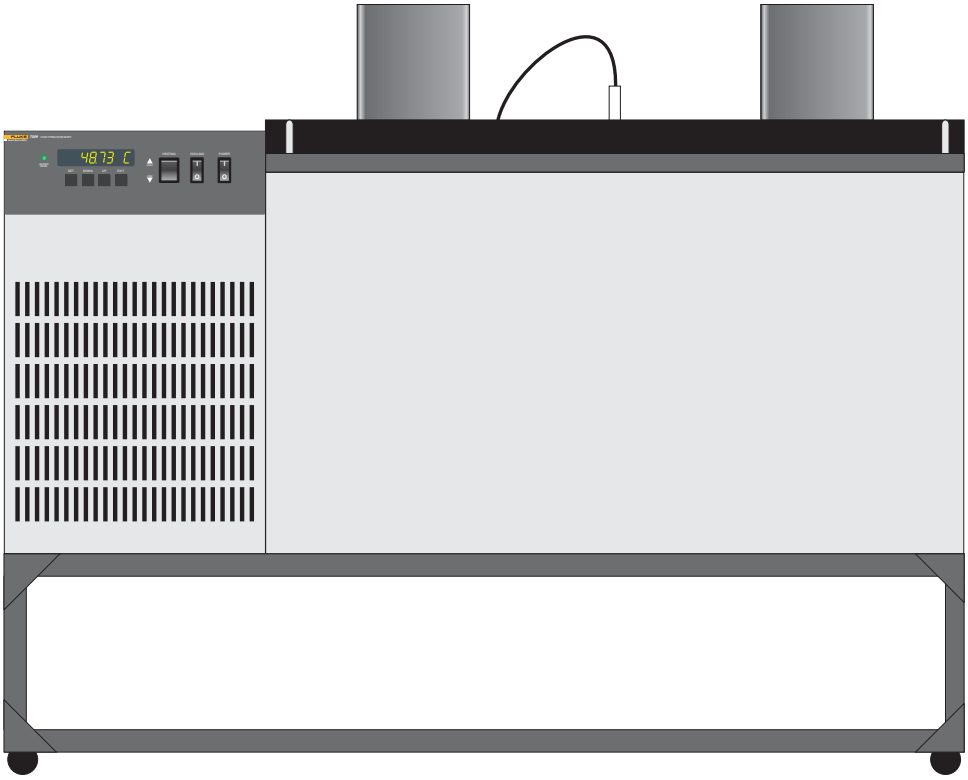

Figure 1 *Bath Assembly*

원문: Fluke Calibration 7009/7108/7015 7009 설명서 · 제조사 원문 자료입니다. 사양은 제조사 사정에 따라 변경될 수 있습니다.

3 Specifications and Environmental Conditions

3.1 Specifications

Range	0°C to 110°C (32°F to 230°F)
Soft cutout†	50°C
Stability at 25°C	±0.0007°C (water) ±0.001°C (mineral oil 5011)
Temperature Setting	Digital display with push-button data entry
Set-point Resolution	0.002°C; high-resolution mode, 0.00003°C
Display Resolution	0.01°C
Digital Setting Accuracy	±1°C
Digital Setting Repeatability	±0.01°C
Heaters	500 and 1000 Watts
Cooling Capacity	100-200 Watts
Refrigeration	1/3 Hp
Access Opening	69.9 cm X 55.9 cm (27.5” X 22”)
Bath Chamber Dimensions (unobstructed space)	55.9 cm H X 69.9 cm W X 33.0 cm D (22” X 27.5” X 13”)
Depth	33.1 cm (13”)
Wetted Parts	304 stainless steel
Safety Cutout	Factory-set high temperature
Power	230 VAC (±10%), 60 Hz, 12 amps, single phase (50 Hz optional)
Volume	167 liters (44 gallons)
Weight	150 kg (330 lb.)
Size	109.2 cm H X 113 cm W X 86.4 cm D (43” X 44.5” X 34”)
Safety	OVERVOLTAGE (Installation) CATEGORY II, Pollution Degree 2 per IEC1010-1

†The soft cutout of the instrument has been set at the factory to 50°C to protect standard resistors placed in the bath. In order to use the bath for other calibration purposes, the user should insure that the soft cutout is adjusted appropriately for the application.

3.2 Environmental Conditions

Although the instrument has been designed for optimum durability and trouble-free operation, it must be handled with care. The instrument should not be operated in an excessively dusty or dirty environment. Maintenance and cleaning recommendations can be found in the Maintenance Section of this manual.

The instrument operates safely under the following conditions:

- Ambient temperature range: 5 - 50°C (41 - 122°F)

원문: Fluke Calibration 7009/7108/7015 7009 설명서 · 제조사 원문 자료입니다. 사양은 제조사 사정에 따라 변경될 수 있습니다.

- ambient relative humidity: maximum 80% for temperature <31°C, decreasing linearly to 50% at 40°C
- pressure: 75kPa - 106kPa
- mains voltage within ± 10% of nominal
- vibrations in the calibration environment should be minimized
- altitude less than 2,000 meters
- indoor use only

원문: Fluke Calibration 7009/7108/7015 7009 설명서 · 제조사 원문 자료입니다. 사양은 제조사 사정에 따라 변경될 수 있습니다.

4 Quick Start

This chapter gives a brief summary of the steps required to set up and operate the 7009 bath. This should be used as a general overview and reference and not as a substitute for the remainder of the manual. Please read Section 8 carefully before operating the bath.

4.1 Set Up

Set up of the bath requires careful unpacking and placement of the bath, filling the bath with fluid, installing the probe and connecting power. Consult Chapter 4 for detailed instructions for proper installation of the bath. Be sure to place the bath in a safe, clean and level location.

Fill the bath tank with an appropriate liquid. For operation at moderate bath temperatures, clean distilled water works well. Carefully pour the fluid into the bath tank through the large rectangular access hole above the tank avoiding spilling any fluid. The fluid must not exceed a height of 1/2 inch below the bath lid.

The control probe must be inserted through the lid into the bath and plugged into the socket at the back of the bath.

4.2 Power

Plug the bath power cord into a mains outlet of the proper voltage, frequency, and current capability. See Section 3.1, Specifications for power details. Set the “HEATER” switch on the front panel to position “LOW” and turn the bath on using the front panel “POWER” switch. The bath will turn on and begin to heat or cool to reach the previously programmed temperature setpoint. The front panel LED display will indicate the actual bath temperature.

4.3 Setting the Temperature

In the following discussion a solid box around the word SET, UP, EXIT or DOWN indicates the panel button while the dotted box indicates the display reading. Explanation of the button or display reading are to the right of each button or display value.

To view or set the bath temperature set-point proceed as follows. The front panel LED display normally shows the actual bath temperature.

24.68 C *Bath temperature display*

When “SET” is pressed the display will show the set-point memory that is currently being used and its value. Eight set-point memories are available.

원문: Fluke Calibration 7009/7108/7015 7009 설명서 · 제조사 원문 자료입니다. 사양은 제조사 사정에 따라 변경될 수 있습니다.

SET *Access set-point selection*

1. 25.0 *Set-point 1, 25.0°C currently used*

Press "SET" to select this memory and access the set-point value.

SET *Access set-point value*

C 25.00 *Current value of set-point 1, 25.00°C*

Press "UP" or "DOWN" to change the set-point value.

UP *Increment display*

C 30.00 *New set-point value*

Press SET to accept the new value and display the vernier value. The bath begins heating or cooling to the new set-point.

Store new set-point, access vernier

0.00000 *Current vernier value*

Press "EXIT" and the bath temperature will be displayed again.

Return to the temperature display

24.73 C *Bath temperature display*

The bath will heat or cool until it reaches the new set-point temperature. Set the heater switch to position "HIGH" to allow the bath to more quickly reach a higher temperature. The "HIGH" setting may be necessary to reach higher temperatures and control at high temperatures.

When setting the set-point temperature be careful not to exceed the temperature limit of the bath fluid. The over-temperature cutout should be correctly set to prevent this from happening. See Section 8.8.

If operating the bath below 45 °C set the COOLING power switch to ON. The cooling temperature may require adjustment to provide the proper amount of cooling. See section 8.5.

To obtain optimum control stability adjust the proportional band as discussed in Section 9.7.

원문: Fluke Calibration 7009/7108/7015 7009 설명서 · 제조사 원문 자료입니다. 사양은 제조사 사정에 따라 변경될 수 있습니다.

5 Installation

5.1 Unpacking

Unpack the bath carefully and inspect it for any damage that may have occurred during shipment. If there is shipping damage, notify the carrier immediately.

Verify that all components are present:

- The 7009 Bath
- Access Hole Cover
- Controller Probe
- User's Guide
- Drain Elbow
- Report of Test

If you are missing any item, please contact a Fluke Calibration Authorized Service Center (see Section 1.3).

5.2 Bath Environment

The 7009 Bath is a precision instrument which should be located in an appropriate environment. The location should be free of drafts, extreme temperatures and temperature changes, dirt, etc. The surface where the bath is placed must be level.

If used at higher temperatures where fluid vaporization is significant, use of a fume hood is recommended.

5.3 Bath Preparation and Filling

The 7009 bath is designed for use with standard resistors, therefore, the soft cutout of the instrument has been set at the factory to 50°C to protect standard resistors placed in the bath. In order to use the bath for other calibration purposes, the user should insure that the soft cutout is adjusted appropriately for the application.

The 7009 Bath is not provided with a fluid. Various fluids are available from Fluke Calibration and other sources. Depending on the desired temperature range, any of the following fluids, as well as others, may be used in the bath:

- Water
- Ethylene Glycol/Water
- Methanol
- Mineral oil

원문: Fluke Calibration 7009/7108/7015 7009 설명서 · 제조사 원문 자료입니다. 사양은 제조사 사정에 따라 변경될 수 있습니다.

- Silicone oil

Fluids are discussed in detail in Section 8.1.

Remove any access hole cover from the bath and check the tank for foreign matter (dirt, remnant packing material, etc.). Use clean unpolluted fluid. Carefully fill the bath through the large square access hole to a level that will allow for stirring and thermal expansion. The fluid should never exceed a height of 1/2" below the top of the tank. Carefully monitor the bath fluid level as the bath temperature rises to prevent overflow or splashing. Remove excess fluid if necessary and with caution if the fluid is hot.

Be careful to prevent bath fluid from spilling on the stirring motor while filling. Note that underfilling may reduce bath performance and may possibly damage the bath heater.

5.4 Probe

Inspect the bath controller probe. It should not be bent or damaged in any way. Reasonable caution should be used in handling this probe as it contains a precision platinum sensor and is mechanically shock sensitive. Dropping, striking, or other physical shock may cause a shift in resistance in the probe resulting in diminished bath accuracy. If damaged, the probe can be replaced. Contact a Fluke Calibration Authorized Service Center for assistance.

Insert the probe into the 1/4 inch probe hole at the top left side of the bath lid. The tip of the probe must be well immersed in the fluid. The probe connector is plugged into the rear of the bath into the socket labelled "PROBE".

5.5 Power

With the bath power switch off, plug the bath into an AC mains outlet of the appropriate voltage, frequency, and current capacity. See Section 3.1, Specifications for power details.

Be sure the stirring motor power cord is plugged into the "STIRRER" socket at the back of the bath.

원문: Fluke Calibration 7009/7108/7015 7009 설명서 · 제조사 원문 자료입니다. 사양은 제조사 사정에 따라 변경될 수 있습니다.

6 Bath Use

READ BEFORE PLACING THE BATH IN SERVICE

The information in this section is for general information only. It is not designed to be the basis for calibration laboratory procedures. Each laboratory will need to write their own specific procedures.

6.1 General

Be sure to select the correct fluid for the temperature range of the calibration. Bath fluids should be selected to operate safely with adequate thermal properties to meet the application requirements. Also, be aware that some fluids expand and could overflow the bath if not watched. Refer to General Operation, section 8, for information specific to fluid selection and to the MSDS sheet specific to the fluid selected. Generally, baths are set to one temperature and used to calibrate probes only at that single temperature. This means that the type of bath fluid does not have to change. Additionally, the bath can be left energized reducing the stress on the system.

The bath generates extreme temperatures. Precautions must be taken to prevent personal injury or damage to objects. Probes may be extremely hot or cold when removed from the bath. Cautiously handle probes to prevent personal injury. Carefully place probes on a heat/cold resistant surface or rack until they are at room temperature. It is advisable to wipe the probe with a clean soft cloth or paper towel before inserting it into another bath. This prevents the mixing of fluids from one bath to another. If the probe has been calibrated in liquid salt, carefully wash the probe in warm water and dry completely before transferring it to another fluid. Always be sure that the probe is completely dry before inserting it into a hot fluid. Some of the high temperature fluids react violently to water or other liquid mediums. Be aware that cleaning the probe can be dangerous if the probe has not cooled to room temperature. Additionally, high temperature fluids may ignite the paper towels if the probe has not been cooled.

For optimum accuracy and stability, allow the bath adequate stabilization time after reaching the set-point temperature.

6.2 Comparison Calibration

Comparison calibration involves testing a probe (unit under test, UUT) against a reference probe. After inserting the probes to be calibrated into the bath, allow sufficient time for the probes to settle and the temperature of the bath to stabilize.

One of the significant dividends of using a bath rather than a dry-well to calibrate multiple probes is that the probes do not need to be identical in construction. The fluid in the bath allows different types of probes to be calibrated at the same time. However, stem effect from different types of probes is not totally eliminated. Even though all baths have horizontal and vertical gradients,

원문: Fluke Calibration 7009/7108/7015 7009 설명서 · 제조사 원문 자료입니다. 사양은 제조사 사정에 따라 변경될 수 있습니다.

these gradients are minimized inside the bath work area. Nevertheless, probes should be inserted to the same depth in the bath liquid. Be sure that all probes are inserted deep enough to prevent stem effect. From research at Fluke Fluke Scientific, we suggest a general rule-of-thumb for immersion depth to reduce the stem effect to a minimum: 15 x the diameter of the UUT + the sensor length. Do not submerge the probe handles. If the probe handles get too warm during calibration at high temperatures, a heat shield could be used just below the probe handle. This heat shield could be as simple as aluminum foil slid over the probe before inserting it in the bath or as complicated as a specially designed reflective metal apparatus.

When calibrating over a wide temperature range, better results can generally be achieved by starting at the highest temperature and progressing down to the lowest temperature.

Probes can be held in place in the bath by using probe clamps or drilling holes in the access cover. Other fixtures to hold the probes can be designed. The object is to keep the reference probe and the probe(s) to be calibrated as closely grouped as possible in the working area of the bath. Bath stability is maximized when the bath working area is kept covered.

In preparing to use the bath for calibration start by:

- Placing the reference probe in the bath working area.
- Placing the probe to be calibrated, the UUT, in the bath working area as close as feasibly possible to the reference probe.

6.3 Calibration of Multiple Probes

Fully loading the bath with probes increases the time required for the temperature to stabilize after inserting the probes. Using the reference probe as the guide, be sure that the temperature has stabilized before starting the calibration.

원문: Fluke Calibration 7009/7108/7015 7009 설명서 · 제조사 원문 자료입니다. 사양은 제조사 사정에 따라 변경될 수 있습니다.

7 Parts and Controls

7.1 Front Control Panel

The following controls and indicators are present on the controller front panel (see Figure below): (1) the digital LED display, (2) the control buttons, (3) the bath on/off power switch, (4) the control indicator light, (5) the heater power switch, and (6) the cooling power switch.

(1) The digital display is an important part of the temperature controller because it not only displays set and actual temperatures but also various bath functions, settings, and constants. The display shows temperatures in values according to the selected scale units °C or °F.

(2) The control buttons (SET, DOWN, UP, and EXIT) are used to set the bath temperature setpoint, access and set other operating parameters, and access and set bath calibration parameters.

A brief description of the functions of the buttons follows:

SET – Used to display the next parameter in a menu and to set parameters to the displayed value.

DOWN – Used to decrement the displayed value of settable parameters.

UP – Used to increment the displayed value.

EXIT – Used to exit from a menu. When EXIT is pressed any changes made to the displayed value will be ignored.

(3) The on/off switch controls power to the entire bath assembly. It powers the stirring motor and the bath controller/heater circuit.

(4) The control indicator is a two color light emitting diode. This indicator lets the user visually see the ratio of heating to cooling. When the indicator is red the heater is on, and when it is green the heater is off and the bath is cooling.

Figure 2 *Front Controller Panel*

원문: Fluke Calibration 7009/7108/7015 7009 설명서 · 제조사 원문 자료입니다. 사양은 제조사 사정에 따라 변경될 수 있습니다.

(5) The heater power switch is used to select the appropriate heater power levels for heating and controlling the bath at various temperatures.

(6) The cooling power switch controls power to the cooling compressor and cooling fan.

NOTE: *Be sure the "Cooling Power Switch" (see Figure 2) is in the "OFF" (0) position when the unit is turned ON. Repeatedly turning the unit on with the "Cooling Power Switch" in the "ON" position may damage the System Fuse.*

7.2 Side Panel

The side panel has three features (see Figure 3): 1) the BACK PRESSURE valve, 2) the COOLING TEMPERATURE regulating valve, and 3) the COOLING TEMP gauge. With the interface option an extra cooling valve (HIGH) is provided.

1) The BACK PRESSURE valve adjustment is used to control the amount of cooling supplied to the system. This valve reduces the cooling capacity by restricting the flow of refrigerant to the bath, allowing the adjustment of the heating to cooling percentage. Under normal operation the valve should be fully open (counter clockwise).

2) The COOLING TEMPERATURE regulating valve is used to adjust the temperature at which the refrigerant evaporates, which determines cooling efficiency. The ideal temperature for operation is about 5-10 degrees Celsius below the desired bath temperature. Refer to label below gauge for approximate psi and evaporative temperature settings. The table from the label is reproduced below.

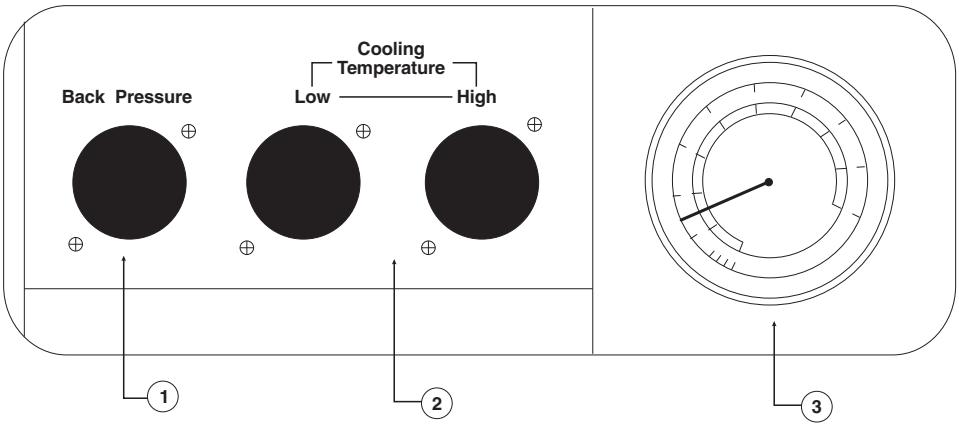

Figure 3 *Side panel controls*

원문: Fluke Calibration 7009/7108/7015 7009 설명서 · 제조사 원문 자료입니다. 사양은 제조사 사정에 따라 변경될 수 있습니다.

For this bath: Control Temperature		Set the Cooling Temp. Valve to this pressure
°C	°F	Nominal Cooling PSIG
–10	14	4.7
–5	23	9.2
0	32	14.5
5	41	20.7
10	50	27.9
15	59	36.1
20	68	45.5
25	77	56.2
DO NOT set the Cooling Pressure above 90 PSIG		

3) The COOLING TEMP gauge is used to indicate the temperature at which the refrigerant is evaporating. The COOLING TEMP regulating valve is used to set and then controls this temperature.

7.3 Back Panel

The back panel has seven different features (see Figure 4). 1) The PROBE connector, 2) STIRRER POWER outlet, 3) HEATER FUSE, 4) 110 VAC power cord, 5) ELECTRONICS FUSE INTERNAL notation, 6) SERIAL NO. notation, 7) & 8) optional interface connectors, and 9) the bath DRAIN.

1) The PROBE CONNECTOR in the back panel is used for the temperature controller probe.

2) The STIRRER POWER is provided for the stirring motor.

3) The HEATER FUSES are 10 amp.

4) POWER CORD See Section 3.1, Specifications, for power details.

5) The ELECTRONICS FUSE is located inside the cabinet and is a 1/4 amp fuse. If the fuse needs to be replaced contact a Fluke Calibration Authorized Service Center for assistance.

6) The SERIAL NUMBER and model numbers are located on the back panel. When consulting with a service center use the model and serial numbers to properly identify your instrument.

7) If the bath is supplied with the optional serial RS-232 interface, the interface cable is attached to the back of the bath at the connector labeled “RS-232”.

8) If the bath is supplied with the optional IEEE-488 interface then there will be a port labeled “IEEE-488" for connection to your IEEE cable.

원문: Fluke Calibration 7009/7108/7015 7009 설명서 · 제조사 원문 자료입니다. 사양은 제조사 사정에 따라 변경될 수 있습니다.

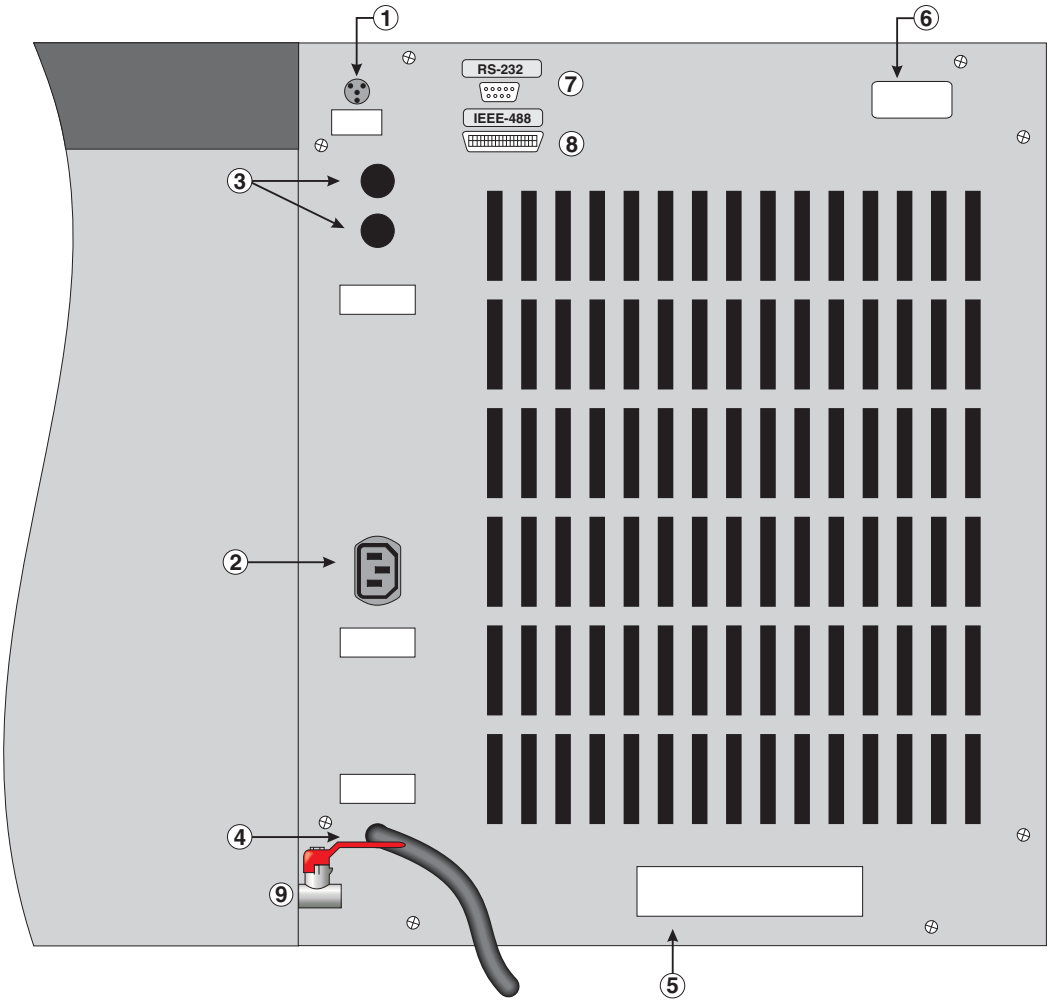

Figure 4 *Back Panel*

WARNING: *Extreme care must be taken to prevent harm to the user or the surrounding environment. Do not exceed a 120°C fluid temperature for draining. The valve could be damaged if 120°C is exceeded. Insulate the container from the floor or other objects that may be damaged by high temperatures as required.*

9) A drain valve is provided for ease of removing the fluid media from the bath. It is advisable to use a container of adequate size to hold the full load of fluid. Some oils are more easily drained at higher temperatures.

10) The SYSTEM FUSES (not shown) are located inside the cabinet. If the fuse needs to be replaced, contact a service center for assistance.

원문: Fluke Calibration 7009/7108/7015 7009 설명서 · 제조사 원문 자료입니다. 사양은 제조사 사정에 따라 변경될 수 있습니다.

8 General Operation

8.1 Bath Fluid

Many fluids will work with 7009 bath. Choosing a fluid requires consideration of many important characteristics of the fluid. Among these are temperature range, viscosity, specific heat, thermal conductivity, thermal expansion, electrical conductivity, fluid lifetime, safety, and cost.

8.1.1 Temperature Range

One of the most important characteristics to consider is the temperature range of the fluid. Few fluids work well throughout the complete temperature range of the bath. The temperature at which the bath is operated must always be within the safe and useful temperature range of the fluid. The lower temperature range of the fluid is determined by the freeze point of the fluid or the temperature at which the viscosity becomes too great. The upper temperature is usually limited by vaporization, flammability, or chemical breakdown of the fluid. Evaporization of the fluid at higher temperatures may affect temperature stability because of cool condensed fluid dripping into the bath from the lid.

The bath temperature should be limited by setting the safety cutout so that the bath temperature cannot exceed the safe operating temperature limit of the fluid.

8.1.2 Viscosity

Viscosity is a measure of the thickness of a fluid, how easily it can be poured and mixed. Viscosity affects the temperature stability of the bath. With low viscosity, fluid mixing is better which creates a more uniform temperature throughout the bath. This improves the bath response time which allows it to maintain a more constant temperature. For good control the viscosity should be less than 10 centistokes. 50 centistokes is about the upper limit of allowable viscosity. Viscosities greater than this cause very poor control stability and may also overheat or damage the stirring motor. With oils viscosity may vary greatly with temperature.

When using fluids with higher viscosities the controller proportional band may need to be increased to compensate for the reduced response time. Otherwise the temperature may begin to oscillate.

8.1.3 Specific Heat

Specific heat is the measure of the heat storage ability of the fluid. Specific heat, though to a lesser degree, also affects the control stability. It also affects the heating and cooling rates. Generally, a lower specific heat causes slightly better control stability and quicker heating and cooling. With fluids with higher specific heat the controller may require a decreased proportional band to compensate for the decrease in sensitivity of the bath temperature to heat input.

원문: Fluke Calibration 7009/7108/7015 7009 설명서 · 제조사 원문 자료입니다. 사양은 제조사 사정에 따라 변경될 수 있습니다.

8.1.4 Thermal Conductivity

Thermal conductivity measures how easily heat flows through the fluid. Thermal conductivity of the fluid affects the control stability, temperature uniformity, and probe temperature settling time. Fluids with higher conductivity distribute heat more quickly and evenly improving bath performance.

8.1.5 Thermal Expansion

Thermal expansion describes how the volume of the fluid changes with temperature. Thermal expansion of the fluid used must be considered since the increase in fluid volume as the bath temperature changes may cause overflow. Excessive thermal expansion may also be undesirable in applications where constant liquid level is important. Oils typically have significant thermal expansion.

8.1.6 Electrical Conductivity

In some applications, such as measuring the resistance of bare temperature sensors, it may be important that little or no electrical leakage occur through the fluid. In this case consider a fluid with very low electrical conductivity or high resistivity.

8.1.7 Fluid lifetime

Many fluids degrade over time because of evaporization, water absorption, gelling, or chemical breakdown. Often the degradation becomes significant near the upper temperature limit of the fluid.

8.1.8 Safety

When choosing a fluid always consider the safety issues associated. Fluids may be hazardous. Contact with eyes, skin, or inhalation of vapors may cause injury. A proper fume hood must be used if hazardous or bothersome vapors are produced. Fluids may be flammable and require special fire safety equipment and procedures.

Hazardous fluids require special disposal according to applicable laws after use.

8.1.9 Cost

Cost of bath fluids may vary greatly, from cents per gallon for water to hundreds of dollars per gallon for synthetic oils. Cost may be an important consideration when choosing a fluid.

8.1.10 Commonly Used Fluids

Below and in the following chart and table are descriptions of some of the more commonly used fluids and their characteristics.

원문: Fluke Calibration 7009/7108/7015 7009 설명서 · 제조사 원문 자료입니다. 사양은 제조사 사정에 따라 변경될 수 있습니다.

8.1.10.1 Water

Water is often used because of its very low cost, availability, and excellent temperature control characteristics. Water has very low viscosity and good thermal conductivity and heat capacity which makes it among the best fluids for control stability at low temperatures. Temperature stability is much poorer at higher temperatures because water condenses on the lid, cools and drips into the bath. Water is safe and relatively inert. The electrical conductivity of water may prevent its use in some applications. Water has a limited temperature range, from a few degrees above 0C to a few degrees below 100C. At higher temperatures evaporation becomes significant. Water used in the bath should be distilled or softened to prevent mineral deposits. Consider using an algicide chemical in the water to prevent contamination.

8.1.10.2 Ethylene Glycol

The temperature range of water may be extended by using a solution of 1 part water and 1 part ethylene glycol (antifreeze). The characteristics of the ethylene glycol-water solution are similar to water. Use caution with ethylene glycol since the fluid is very toxic. Ethylene glycol must be disposed of properly.

8.1.10.3 Methanol

Methanol or methyl alchohol is often used at low temperatures below 0C. Methanol is relatively inexpensive, has good control characteristics, and has a low freeze point. Methanol is very toxic so care must be taken when using and disposing of this fluid.

8.1.10.4 Mineral Oil

Mineral oil or paraffin oil is often used at moderate temperatures above the range of water. Mineral oil is relatively inexpensive. At lower temperatures mineral oil is quite viscous and control may be poor. At higher temperatures vapor emission becomes significant. The vapors may be dangerous and use of a fume hood is highly recommended. As with most oils mineral oil will expand as temperature increases so be careful not to fill the bath too full that it overflows when heated. The viscosity and thermal characteristics of mineral oil is poorer than water so temperature stability will not be as good. Mineral oil has very low electrical conductivity. Use caution with mineral oil since it is flammable and may also cause serious injury if inhaled or ingested.

8.1.10.5 Silicone Oil

Silicone oils are available which offer a much wider operating temperature range than mineral oil. These oils are more expensive as well. For information on silicone oils contact Fluke Calibration.

원문: Fluke Calibration 7009/7108/7015 7009 설명서 · 제조사 원문 자료입니다. 사양은 제조사 사정에 따라 변경될 수 있습니다.

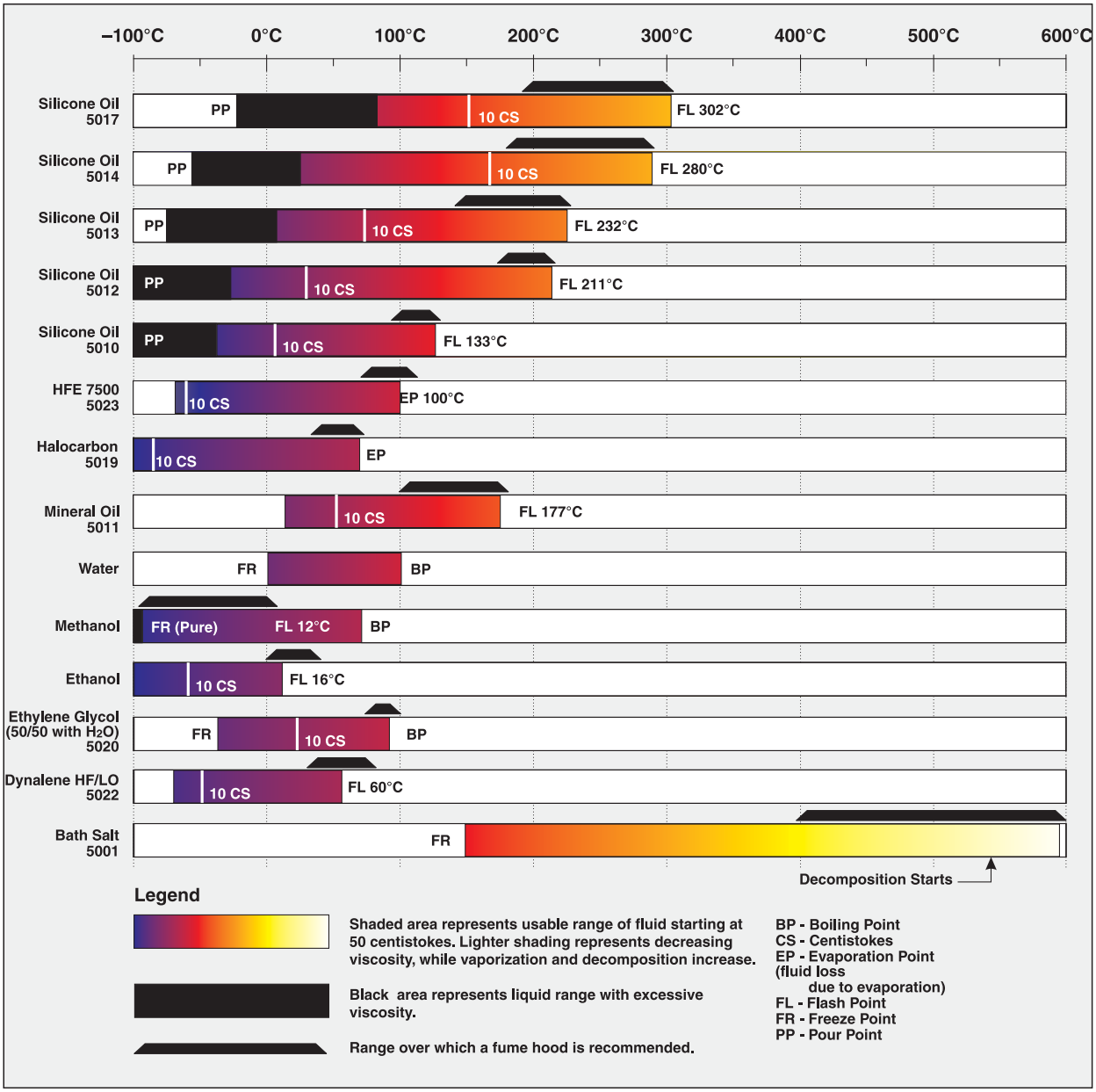

Figure 5 *Chart of various bath fluids and their properties.*

8.2 Stirring

Stirring of the bath fluid is very important for stable temperature control. The fluid must be mixed well for good temperature uniformity and fast controller response. The stirrer is precisely adjusted for optimum performance.

원문: Fluke Calibration 7009/7108/7015 7009 설명서 · 제조사 원문 자료입니다. 사양은 제조사 사정에 따라 변경될 수 있습니다.

Table 2 *Table of various fluids and their properties.*

Fluid (# = Fluke Part No.)	Lower Temperature Limit*	Upper Temperature Limit*	Flash Point	Viscosity (centistokes)	Specific Gravity	Specific Heat (cal/g/°C)	Thermal Conductivity (cal/s/cm/°C)	Thermal Expansion (cm/cm/°C)	Resistivity (10Ω-cm)
Halocarbon 0.8 #5019	–100°C (v)**	70°C (e)	NONE	5.7 @ –50°C 0.8 @ 40°C 0.5 @ 70°C	1.71 @ 40°C	0.2	0.0004	0.0011	
Methanol	–96°C (fr)	10°C (fl,cc)	12°C	1.3 @ –35°C 0.66 @ 0°C 0.45 @ 20°C	0.810 @ 0°C 0.792 @ 20°C	0.6	0.0005 @ 20°C	0.0014 @ 25°C	
Water	0°C (fr)	95°C (b)	NONE	1 @ 25°C 0.4 @ 75°C	1.00	1.00	0.0014	0.0002 @ 25°C	
Ethylene Glycol—50% #5020	–30°C (fr)	90°C (b)	NONE	7 @ 0°C 2 @ 50°C 0.7 @ 100°C	1.05	0.8 @ 0°C	0.001		
Mineral Oil No.7 #5011	10°C (v)	166°C (fl)	168°C	15 @ 75°C 5 @ 125°C	0.87 @ 25°C 0.84 @ 75°C 0.81 @ 125°C	0.48 @ 25°C 0.53 @ 75°C 0.57 @ 125°C	0.00025 @ 25°C	0.0007 @ 50°C	5 @ 25°C
Silicone Oil Type 200.05 #5010	–40°C (v)**	130°C (fl, cc)	133°C	5 @ 25°C	0.92 @ 25°C	0.4	0.00028 @ 25°C	0.00105	1000 @ 25°C 10 @ 150°C
Silicone Oil Type 200.10 #5012	–30°C (v)**	209°C (fl, cc)	211°C	10 @ 25°C 3 @ 135°C	0.934 @ 25°C	0.43 @ 40°C 0.45 @ 100°C 0.482 @ 200°C	0.00032 @ 25°C	0.00108	1000 @ 25°C 50 @ 150°C
Silicone Oil Type 200.20 #5013	10°C (v)	230°C (fl, cc)	232°C	20 @ 25°C	0.949 @ 25°C	0.370 @ 40°C 0.393 @ 100°C 0.420 @ 200°C	0.00034 @ 25°C	0.00107	1000 @ 25°C 50 @ 150°C
Silicone Oil Type 200.50 #5014	30°C (v)	278°C (fl, cc)	280°C	50 @ 25°C	0.96 @ 25°C	0.4	0.00037 @ 25°C	0.00104	1000 @ 25°C 50 @ 150°C
Silicone Oil Type 550 #5016	70°C (v)	230°C (fl, cc) 300°C (fl, oc)	232°C	50 @ 70°C 10 @ 104°C	1.07 @ 25°C	0.358 @ 40°C 0.386 @ 100°C 0.433 @ 200°C	0.00035 @ 25°C	0.00075	100 @ 25°C 1 @ 150°C
Silicone Oil Type 710 #5017	80°C (v)	300°C (fl, oc)	302°C	50 @ 80°C 7 @ 204°C	1.11 @ 25°C	0.363 @ 40°C 0.454 @ 100°C 0.505 @ 200°C	0.00035 @ 25°C	0.00077	100 @ 25°C 1 @ 150°C
Silicone Oil Type 210-H	66°C (v)	313°C (fl, oc)	315°C	50 @ 66°C 14 @ 204°C	0.96 @ 25°C	0.34 @ 100°C	0.0003	0.00095	100 @ 25°C 1 @ 150°C
Heat Transfer Salt #5001	180°C (fr)	550°C	NONE	34 @ 150°C 6.5 @ 300°C 2.4 @ 500°C	2.0 @ 150°C 1.9 @ 300°C 1.7 @ 500°C	0.33	0.0014	0.00041	1.7 Ω /cm

*Limiting Factors — b - boiling point e - high evaporation fl - flash point fr - freeze point v - viscosity — Flash point test oc = open cup cc = closed cup
**Very low water solubility, ice will form as a slush from condensation below freezing.

8.3 Power

Power to the bath is provided by an AC mains supply. See Section 3.1, Specifications, for power details. Power to the bath passes through a filter to prevent switching spikes from being transmitted to other equipment.

To turn on the bath switch the control panel power switch to the ON position. The stir motor will turn on, the LED display will begin to show the bath tem-

원문: Fluke Calibration 7009/7108/7015 7009 설명서 · 제조사 원문 자료입니다. 사양은 제조사 사정에 따라 변경될 수 있습니다.

perature, and the heater will turn on or off until the bath temperature reaches the programmed set-point.

When powered on the control panel display will briefly show a four digit number. This number indicates the number of times power has been applied to the bath. Also briefly displayed is data which indicates the controller hardware configuration. This data is used in some circumstances for diagnostic purposes.

8.4 Heater

The power to the bath heater is precisely controlled by the temperature controller to maintain a constant bath temperature. Power is controlled by periodically switching the heater on for a certain amount of time using a solid-state relay.

The front panel red/green control indicator shows the state of the heater. The control indicator glows red when the heater is on and glows green when the heater is off. The indicator will pulse constantly when the bath is maintaining a stable temperature.

The heater has two power level settings. The HIGH heater power setting is used to quickly heat up the bath fluid to the desired operating temperature. The HIGH heater power setting may also be required for control at high temperatures. The LOW setting is used for control at lower temperatures and for scanning at slower rates. When controlling at the HIGH heater power setting instead of LOW the proportional band may need to be increased (typically by a factor of four) to compensate for the increase in power gain. Otherwise the temperature may oscillate.

8.5 Cooling

The BACK PRESSURE control valve limits the cooling capacity of the unit. It will normally be open all the way (full CCW) for temperature slewing and operation. If during operation the front panel meter indicates excessive cooling, this valve is closed partially (turn CW) until the percentage of heating to cooling is brought into line. It is necessary to wait a few minutes after each adjustment until the system settles.

Set the COOLING TEMPERATURE to 5-10°C below the SET TEMPERATURE for near ambient and below operation. For temperature above 16C set the COOLING TEMPERATURE at 7°C. The cooling temperature should NOT be set above 7°C or 90 psig. About 45°C the refrigeration will not be required as there is sufficient cooling to the room. Wait a few minutes after each adjustment until the system establishes itself. Readjust if required after settling for a while.

For maximum cooling for slewing to lower temperatures, the BACK PRESSURE valve should be fully open and the COOLING TEMPERATURE set to 0°C. Readjust higher or lower as required after set temperature is reached.

원문: Fluke Calibration 7009/7108/7015 7009 설명서 · 제조사 원문 자료입니다. 사양은 제조사 사정에 따라 변경될 수 있습니다.

8.6 Temperature Controller

The bath temperature is controlled by Fluke Calibration's unique hybrid digital/analog temperature controller. The controller offers the tight control stability of an analog temperature controller as well as the flexibility and programmability of a digital controller.

The bath temperature is monitored with a platinum resistance sensor in the control probe. The signal is electronically compared with the programmable reference signal, amplified, and then fed to a pulse-width modulator circuit which controls the amount of power applied to the bath heater.

The bath is operable within the temperature range given in the specifications. For protection against solid-state relay failure or other circuit failure, the microcontroller will automatically turn off the heater with a second mechanical relay anytime the bath temperature is more than a certain amount above the set-point temperature. As a second protection device, the controller is also equipped with a separate thermocouple temperature monitoring circuit which will shut off the heater if the temperature exceeds the cutout set-point.

The controller allows the operator to set the bath temperature with high resolution, set the cutout, adjust the proportional band, monitor the heater output power, and program the controller configuration and calibration parameters. The controller may be operated in temperature units of degrees Celsius or Fahrenheit. The controller is operated and programmed from the front control panel using the four key switches and digital LED display. The controller may also be optionally equipped with an serial RS-232 or IEEE-488 GPIB digital interface for remote operation. Operation of the controller using the front control panel is discussed following in Section. Operation using the digital interfaces is discussed in Section.

When the controller is set to a new set-point the bath will heat or cool to the new temperature. Once the new temperature is reached the bath usually takes 10-15 minutes for the temperature to settle and stabilize. There may be a small overshoot or undershoot of about 0.5°C.

원문: Fluke Calibration 7009/7108/7015 7009 설명서 · 제조사 원문 자료입니다. 사양은 제조사 사정에 따라 변경될 수 있습니다.

9 Controller Operation

This chapter discusses in detail how to operate the bath temperature controller using the front control panel. Using the front panel key switches and LED display the user may monitor the bath temperature, set the temperature set-point in degrees C or F, monitor the heater output power, adjust the controller proportional band, set the cutout set-point, and program the probe calibration parameters, operating parameters, serial and IEEE-488 interface configuration, and controller calibration parameters. Operation is summarized in Figure 6.

9.1 Bath Temperature

The digital LED display on the front panel allows direct viewing of the actual bath temperature. This temperature value is what is normally shown on the display. The units, C or F, of the temperature value are displayed at the right. For example,

25.00 C *Bath temperature in degrees Celsius*

The temperature display function may be accessed from any other function by pressing the “EXIT” button.

9.2 Reset Cutout

If the over-temperature cutout has been triggered then the temperature display will alternately flash,

cutout *Indicates cut-out condition*

The message will continue to flash until the temperature is reduced and the cutout is reset.

The cutout has two modes — automatic reset and manual reset. The mode determines how the cutout is reset which allows the bath to heat up again. When in automatic mode, the cutout will reset itself as soon as the temperature is lowered below the cutout set-point. With manual reset mode the cutout must be reset by the operator after the temperature falls below the set-point.

When the cutout is active and the cutout mode is set to manual (“reset”) then the display will flash “cutout” until the user resets the cutout. To access the reset cutout function press the “SET” button.

Access cutout reset function

The display will indicate the reset function.

rESEt ? *Cutout reset function*

원문: Fluke Calibration 7009/7108/7015 7009 설명서 · 제조사 원문 자료입니다. 사양은 제조사 사정에 따라 변경될 수 있습니다.

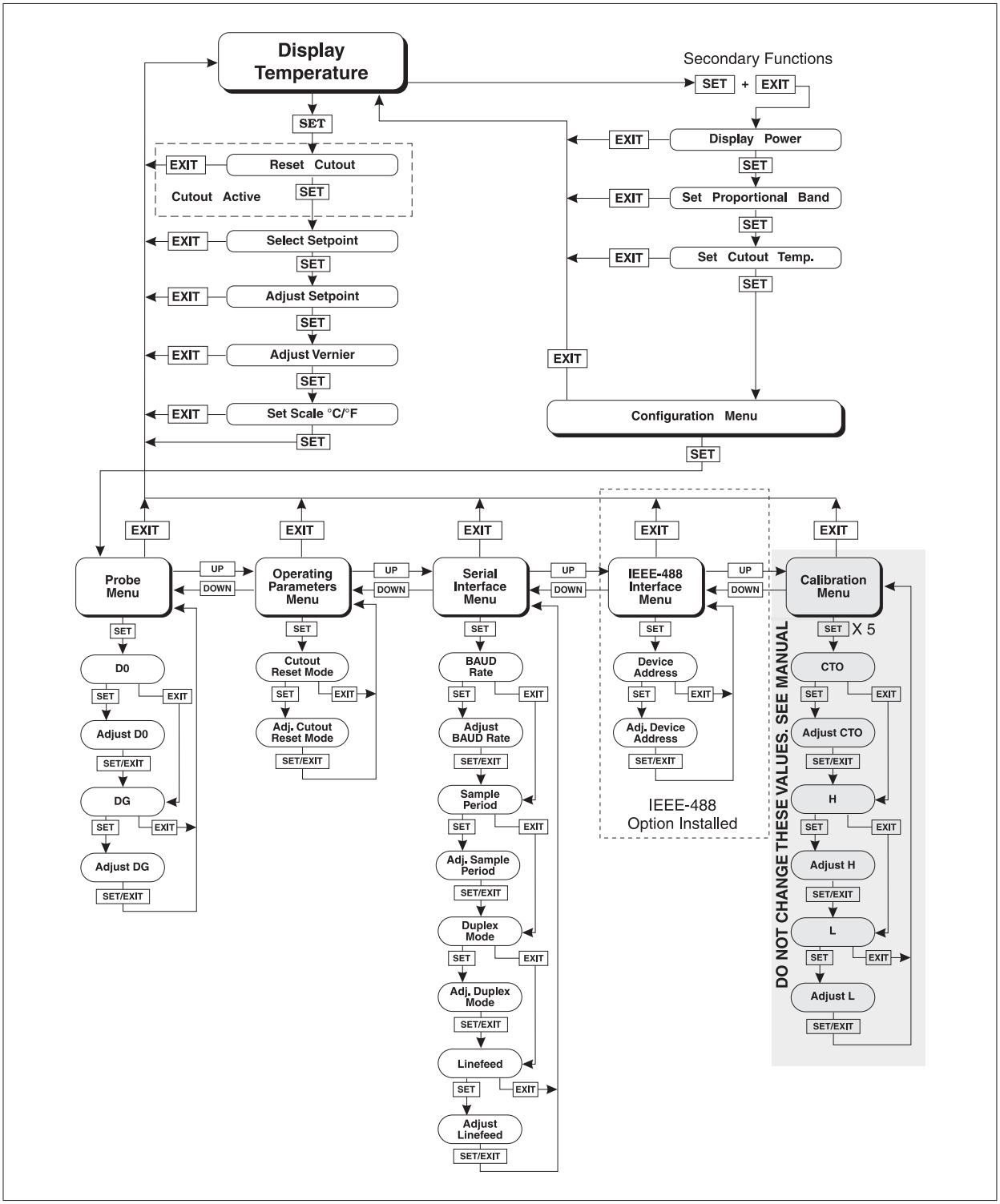

Figure 6 *Flowchart showing the various menu options.*

원문: Fluke Calibration 7009/7108/7015 7009 설명서 · 제조사 원문 자료입니다. 사양은 제조사 사정에 따라 변경될 수 있습니다.

Press “SET” once more to reset the cutout.

Reset cutout

This will also switch the display to the set temperature function. To return to displaying the temperature press the “EXIT” button. If the cutout is still in the over-temperature fault condition the display will continue to flash “cutout”. The bath temperature must drop a few degrees below the cutout set-point before the cutout can be reset.

9.3 Temperature Set-point

The bath temperature can be set to any value within the range and with resolution as given in the specifications. The temperature range of the particular fluid used in the bath must be known by the operator and the bath should only be operated well below the upper temperature limit of the liquid. In addition, the cutout temperature should also be set below the upper limit of the fluid.

Setting the bath temperature involves three steps: (1) select the set-point memory, (2) adjust the set-point value, and (3) adjust the vernier if desired.

9.3.1 Programmable Set-points

The controller stores 8 set-point temperatures in memory. The set-points can be quickly recalled to conveniently set the bath to a previously programmed temperature set-point.

To set the bath temperature one must first select the set-point memory. This function is accessed from the temperature display function by pressing “SET”. The number of the set-point memory currently being used is shown at the left on the display followed by the current set-point value.

25.00 C *Bath temperature in degrees Celsius*

Access set-point memory

1. 25.0 *Set-point memory 1, 25.0°C currently used*

To change the set-point memory press “UP” or “DOWN”.

4. 40.0 *New set-point memory 4, 40.0°C*

Press “SET” to accept the new selection and access the set-point value

Accept selected set-point memory

원문: Fluke Calibration 7009/7108/7015 7009 설명서 · 제조사 원문 자료입니다. 사양은 제조사 사정에 따라 변경될 수 있습니다.

9.3.2 Set-point Value

The set-point value may be adjusted after selecting the set-point memory and pressing "SET". The set-point value is displayed with the units, C or F, at the left.

C 40.00 *Set-point 4 value in °C*

If the set-point value need not be changed then press "EXIT" to resume displaying the bath temperature. Press "UP" or "DOWN" to adjust the set-point value.

C 42.50 *New set-point value*

When the desired set-point value is reached press "SET" to accept the new value and access the set-point vernier. If "EXIT" is pressed instead then any changes made to the set-point will be ignored.

Accept new set-point value

9.3.3 Set-point vernier

The set-point value can only be set with a resolution of 0.01°C. The user may want to adjust the set-point slightly to achieve a precise bath temperature. The set-point vernier allows one to adjust the temperature below or above the set-point by a small amount with very high resolution. Each of the 8 stored set-points has an associated vernier setting. The vernier is accessed from the set-point by pressing "SET". The vernier setting is displayed as a 6 digit number with five digits after the decimal point. This is a temperature offset in degrees of the selected units, C or F.

0.00000 *Current vernier value in °C*

To adjust the vernier press "UP" or "DOWN". Unlike most functions the vernier setting has immediate effect as the vernier is adjusted. "SET" need not be pressed. This allows one to continually adjust the bath temperature with the vernier as it is displayed.

0.00090 *New vernier setting*

Next press "EXIT" to return to the temperature display or "SET" to access the temperature scale units selection.

Access scale units

원문: Fluke Calibration 7009/7108/7015 7009 설명서 · 제조사 원문 자료입니다. 사양은 제조사 사정에 따라 변경될 수 있습니다.

9.4 Temperature Scale Units

The temperature scale units of the controller may be set by the user to degrees Celsius (°C) or Fahrenheit (°F). The units will be used in displaying the bath temperature, set-point, vernier, proportional band, and cutout set-point.

The temperature scale units selection is accessed after the vernier adjustment function by pressing “SET”. From the temperature display function access the units selection by pressing “SET” 4 times.

25.00 C *Bath temperature*

Access set-point memory

1. 25.0 *Set-point memory*

Access set-point value

C 40.00 *Set-point value*

Access vernier

0.00000 *Vernier setting*

Access scale units selection

Un= C *Scale units currently selected*

Press “UP” or “DOWN” to change the units.

Un= F *New units selected*

Press “SET” to accept the new selection and resume displaying the bath temperature.

Set the new units and resume temperature display

9.5 Secondary Menu

Functions which are used less often are accessed within the secondary menu. The secondary menu is accessed by pressing SET and EXIT simultaneously and then releasing. The first function in the secondary menu is the heater power display. (See Figure 6.)

원문: Fluke Calibration 7009/7108/7015 7009 설명서 · 제조사 원문 자료입니다. 사양은 제조사 사정에 따라 변경될 수 있습니다.

9.6 Heater Power

The temperature controller controls the temperature of the bath by pulsing the heater on and off. The total power being applied to the heater is determined by the duty cycle or the ratio of heater on time to the pulse cycle time. This value may be estimated by watching the red/green control indicator light or read directly from the digital display. By knowing the amount of heating to the bath the user can tell if the bath is heating up to the set-point, cooling down, or controlling at a constant temperature. Monitoring the percent heater power will let the user know how stable the bath temperature is. With good control stability the percent heating power should not fluctuate more than ±1% within one minute.

The heater power display is accessed in the secondary menu. Press "SET" and "EXIT" simultaneously and release. The heater power will be displayed as a percentage of full power.

SET + EXIT *Access heater power in secondary menu*

12 Pct *Heater power in percent*

To exit out of the secondary menu press "EXIT". To continue on to the proportional band setting function press "SET".

9.7 Proportional Band

In a proportional controller such as this the heater output power is proportional to the bath temperature over a limited range of temperatures around the setpoint. This range of temperature is called the proportional band. At the bottom of the proportional band the heater output is 100%. At the top of the proportional band the heater output is 0. Thus as the bath temperature rises the heater power is reduced, which consequently tends to lower the temperature back down. In this way the temperature is maintained at a fairly constant temperature.

The temperature stability of the bath depends on the width of the proportional band. See Figure 7. If the band is too wide the bath temperature will deviate excessively from the set-point due to varying external conditions. This is because the power output changes very little with temperature and the controller cannot respond very well to changing conditions or noise in the system. If the proportional band is too narrow the bath temperature may swing back and forth because the controller overreacts to temperature variations. For best control stability the proportional band must be set for the optimum width.

The optimum proportional band width depends on several factors among which are fluid volume, fluid characteristics (viscosity, specific heat, thermal conductivity), heater power setting, operating temperature, and stirring. Thus the proportional band width may require adjustment for best bath stability when any of these conditions change. Of these, the most significant factors affecting the op-

원문: Fluke Calibration 7009/7108/7015 7009 설명서 · 제조사 원문 자료입니다. 사양은 제조사 사정에 따라 변경될 수 있습니다.

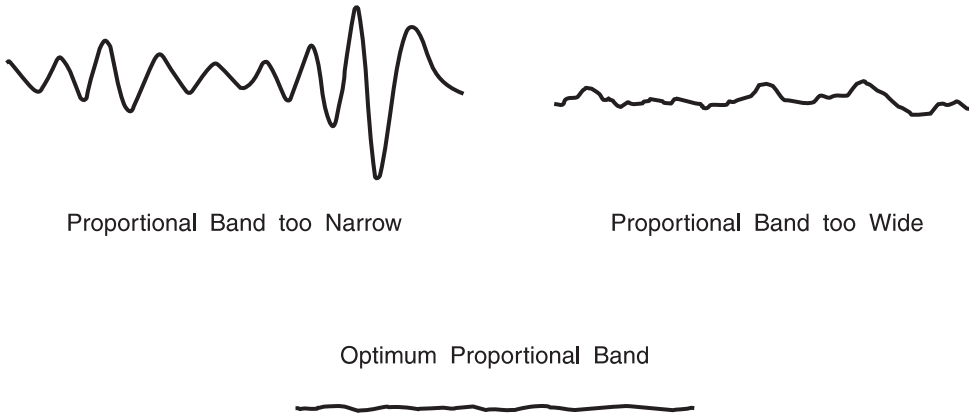

Figure 7 *Bath temperature fluctuation at various proportional band settings.*

timum proportional band width are heater power setting and fluid viscosity. The proportional band should be wider when the higher power setting is used so that the change in output power per change in temperature remains the same. The proportional band should also be wider when the fluid viscosity is higher because of the increased response time.

The proportional band width is easily adjusted from the bath front panel. The width may be set to discrete values in degrees C or F depending on the selected units. The optimum proportional band width setting may be determined by monitoring the stability with a high resolution thermometer or with the controller percent output power display. Narrow the proportional band width to the point at which the bath temperature begins to oscillate and then increase the

Table 3 *Proportional Band — Fluid Table.*

Fluid	Temperature	Heater Setting	Proportional Band	Stability
Water	30.0°C	Low	0.04°C	±0.0004°C
Water	60.0°C	Low	0.04°C	±0.001°C
Eth-Gly 50%	35.0°C	Low	0.05°C	±0.0005°C
Eth-Gly 50%	60.0°C	Low	0.05°C	±0.001°C
Eth-Gly 50%	100.0°C	High	0.4°C	±0.007°C
Oil	35.0°C	Low	0.1°C	±0.003°C
Oil	60.0°C	Low	0.2°C	±0.002°C
Oil	100°C	Low	0.2°C	±0.003°C

원문: Fluke Calibration 7009/7108/7015 7009 설명서 · 제조사 원문 자료입니다. 사양은 제조사 사정에 따라 변경될 수 있습니다.

band width from this point to 3 or 4 times wider. Table 3 lists typical proportional band settings for optimum performance with a variety of fluids at selected temperatures.

The proportional band adjustment may be accessed within the secondary menu. Press "SET" and "EXIT" to enter the secondary menu and show the heater power. Then press "SET" to access the proportional band.

Access heater power in secondary menu

12 Pct *Heater power in percent*

Access proportional band

Pb=0.101C *Proportional band setting*

To change the proportional band press "UP" or "DOWN".

Pb=0.060C *New proportional band setting*

To accept the new setting and access the cutout set-point press "SET". Pressing "EXIT" will exit the secondary menu ignoring any changes just made to the proportional band value.

Accept the new proportional band setting

9.8 Cutout

As a protection against software or hardware fault, shorted heater triac, or user error, the bath is equipped with an adjustable heater cutout device that will shut off power to the heater if the bath temperature exceeds a set value. This protects the heater and bath materials from excessive temperatures and, most importantly, protects the bath fluids from being heated beyond the safe operating temperature preventing hazardous vaporization, breakdown, or ignition of the liquid. The cutout temperature is programmable by the operator from the front panel of the controller. It must always be set below the upper temperature limit of the fluid and no more than 10 degrees above the upper temperature limit of the bath.

If the cutout is activated because of excessive bath temperature then power to the heater will be shut off and the bath will cool. The bath will cool until it reaches a few degrees below the cutout set-point temperature. At this point the action of the cutout is determined by the setting of the cutout mode parameter. The cutout has two selectable modes — automatic reset or manual reset. If the mode is set to automatic, then the cutout will automatically reset itself when the bath temperature falls below the reset temperature allowing the bath to heat up

원문: Fluke Calibration 7009/7108/7015 7009 설명서 · 제조사 원문 자료입니다. 사양은 제조사 사정에 따라 변경될 수 있습니다.

again. If the mode is set to manual, then the heater will remain disabled until the user manually resets the cutout.

The cutout set-point may be accessed within the secondary menu. Press “SET” and “EXIT” to enter the secondary menu and show the heater power. Then press “SET” twice to access the cutout set-point.

Access heater power in secondary menu

12 PcE *Heater power in percent*

Access proportional band

Pb=0.101C *Proportional band setting*

Access cutout set-point

C0= 110C *Cutout set-point*

To change the cutout set-point press “UP” or “DOWN”.

C0= 75C *New cutout set-point*

To accept the new cutout set-point press “SET”.

Accept cutout set-point

The next function is the configuration menu. Press “EXIT” to resume displaying the bath temperature.

9.9 Controller Configuration

The controller has a number of configuration and operating options and calibration parameters which are programmable via the front panel. These are accessed from the secondary menu after the cutout set-point function by pressing “SET.” There are 5 sets of configuration parameters — probe parameters, operating parameters, serial interface parameters, IEEE-488 interface parameters, and controller calibration parameters. The menus are selected using the “UP” and “DOWN” keys and then pressing “SET”. See Figure 6.

9.10 Probe Parameters Menu

The probe parameter menu is indicated by,

PrObE *Probe parameters menu*

원문: Fluke Calibration 7009/7108/7015 7009 설명서 · 제조사 원문 자료입니다. 사양은 제조사 사정에 따라 변경될 수 있습니다.

Press "SET" to enter the menu. The probe parameters menu contains the parameters, DO and DG, which characterize the transfer function of the linearized thermistor control probe. These parameters may be adjusted to improve the accuracy of the bath. This procedure is explained in detail in Chapter 10.

The probe parameters are accessed by pressing "SET" after the name of the parameter is displayed. The value of the parameter may be changed using the "UP" and "DOWN" buttons. After the desired value is reached press "SET" to set the parameter to the new value. Pressing "EXIT" will cause the parameter to be skipped ignoring any changes that may have been made.

9.10.1 DO

This probe parameter refers to the temperature at which the control probe output would be 0. Normally this is set for -25.229.

9.10.2 DG

This probe parameter refers to the temperature span of the probe between 0 and 100% output. Normally this is set for 186.974.

9.11 Operating Parameters

The operating parameters menu is indicated by,

PAr	*Operating parameters menu*

Press "SET" to enter the menu. The operating parameters menu contains the cutout reset mode setting.

9.11.1 Cutout Reset Mode

The cutout reset mode determines whether the cutout resets automatically when the bath temperature drops to a safe value or must be manually reset by the operator.

The parameter is indicated by,

CtorSt	*Cutout reset mode parameter*

Press "SET" to access the parameter setting. Normally the cutout is set for manual mode.

Cto=rSt	*Cutout set for manual reset*

To change to automatic reset mode press "UP" and then "SET".

Cto=Auto	*Cutout set for automatic reset*

원문: Fluke Calibration 7009/7108/7015 7009 설명서 · 제조사 원문 자료입니다. 사양은 제조사 사정에 따라 변경될 수 있습니다.

9.12 Serial Interface Parameters

The serial RS-232 interface parameters menu is indicated by,

SErIAL *Serial RS-232 interface parameters menu*

The Serial interface parameters menu contains parameters which determine the operation of the serial interface. These controls only apply to baths fitted with the serial interface. The parameters in the menu are — BAUD rate, sample period, duplex mode, and linefeed.

9.12.1 BAUD Rate

The BAUD rate is the first parameter in the menu. The BAUD rate setting determines the serial communications transmission rate.

The BAUD rate parameter is indicated by,

BAUd *Serial BAUD rate parameter*

Press “SET” to choose to set the BAUD rate. The current BAUD rate value will then be displayed.

1200 b *Current BAUD rate*

The BAUD rate of the bath serial communications may be programmed to 300, 600, 1200, or 2400 BAUD. Use “UP” or “DOWN” to change the BAUD rate value.

2400 b *New BAUD rate*

Press “SET” to set the BAUD rate to the new value or “EXIT” to abort the operation and skip to the next parameter in the menu.

9.12.2 Sample Period

The sample period is the next parameter in the serial interface parameter menu. The sample period is the time period in seconds between temperature measurements transmitted from the serial interface. If the sample rate is set to 5 for instance then the bath will transmit the current measurement over the serial interface approximately every five seconds. The automatic sampling is disabled with a sample period of 0. The sample period is indicated by,

SAMPLE *Serial sample period parameter*

Press “SET” to choose to set the sample period. The current sample period value will be displayed.

원문: Fluke Calibration 7009/7108/7015 7009 설명서 · 제조사 원문 자료입니다. 사양은 제조사 사정에 따라 변경될 수 있습니다.

SA= 1	*Current sample period (seconds)*

Adjust the value with "UP" or "DOWN" and then use "SET" to set the sample rate to the displayed value.

SA= 60	*New sample period*

9.12.3 Duplex Mode

The next parameter is the duplex mode. The duplex mode may be set to full duplex or half duplex. With full duplex any commands received by the bath via the serial interface will be immediately echoed or transmitted back to the device of origin. With half duplex the commands will be executed but not echoed. The duplex mode parameter is indicated by,

dUPL	*Serial duplex mode parameter*

Press "SET" to access the mode setting.

dUP=FULL	*Current duplex mode setting*

The mode may be changed using "UP" or "DOWN" and pressing "SET".

dUP=HALF	*New duplex mode setting*

9.12.4 Linefeed

The final parameter in the serial interface menu is the linefeed mode. This parameter enables (on) or disables (off) transmission of a linefeed character (LF, ASCII 10) after transmission of any carriage-return. The linefeed parameter is indicated by,

LF	*Serial linefeed parameter*

Press "SET" to access the linefeed parameter.

LF= On	*Current linefeed setting*

The mode may be changed using "UP" or "DOWN" and pressing "SET".

LF= OFF	*New linefeed setting*

원문: Fluke Calibration 7009/7108/7015 7009 설명서 · 제조사 원문 자료입니다. 사양은 제조사 사정에 따라 변경될 수 있습니다.

9.13 IEEE-488 Parameters Menu

Baths may optionally be fitted with an IEEE-488 GPIB interface. In this case the user may set the interface address within the IEEE-488 parameter menu. This menu does not appear on baths not fitted with the interface. The menu is indicated by,

IEEE	*IEEE-488 parameters menu*

Press “SET” to enter the menu.

9.13.1 IEEE-488 Address

The IEEE-488 interface must be configured to use the same address as the external communicating device. The address is indicated by,

AddrESS	*IEEE-488 interface address*

Press “SET” to access the address setting.

Add= 22	*Current IEEE-488 interface address*

Adjust the value with “UP” or “DOWN” and then use “SET” to set the address to the displayed value.

Add= 15	*New IEEE-488 interface address*

9.14 Calibration Parameters

The operator of the bath controller has access to a number of the bath calibration constants namely CTO, H, and L. These values are set at the factory and must not be altered. The correct values are important to the proper and safe operation of the bath. Access to these parameters is available to the user only so that in the event that the controller’s memory fails the user may restore these values to the factory settings. The user should have a list of these constants in the Report of Test sent with the bath.

CAUTION: *DO NOT change the values of the bath calibration constants from the factory set values. The correct setting of these parameters is important to the safety and proper operation of the bath.*

The calibration parameters menu is indicated by,

CAL	*Calibration parameters menu*

Press “SET” five times to enter the menu.

원문: Fluke Calibration 7009/7108/7015 7009 설명서 · 제조사 원문 자료입니다. 사양은 제조사 사정에 따라 변경될 수 있습니다.

9.14.1 CTO

Parameter CTO sets the calibration of the over-temperature cutout. This is not adjustable by software but is adjusted with an internal potentiometer. For the 7009 bath this parameter should read between 110 and 130.

9.14.2 H and L

These parameters set the upper and lower set-point limits of the bath. DO NOT change the values of these parameters from the factory set values. To do so may present danger of the bath exceeding its temperature range causing damage or fire.

9.15 Command Summary

A complete flowchart of controller operation is shown in Figure 6. This chart may be reproduced and used as a reference and operating guide.

원문: Fluke Calibration 7009/7108/7015 7009 설명서 · 제조사 원문 자료입니다. 사양은 제조사 사정에 따라 변경될 수 있습니다.

10 Digital Communication Interface

If supplied with the option, the 7009 bath is capable of communicating with and being controlled by other equipment through the digital interface. Two types of digital interface are available — the RS-232 serial interface and the IEEE-488 GPIB interface.

With a digital interface the bath may be connected to a computer or other equipment. This allows the user to set the bath temperature, monitor the temperature, and access any of the other controller functions, all using remote communications equipment. In addition the heater power setting and cooling capacity may be controlled using the interface. To enable the heater to be switched to high using the interface the “HEATER” switch must be set to the “LOW” position. The cooling power switch must be set to OFF to enable remote control.

10.1 Serial communications

The bath may be installed with an RS-232 serial interface that allows serial digital communications over fairly long distances. With the serial interface the user may access any of the functions, parameters and settings discussed in Section with the exception of the BAUD rate setting.

10.1.1 Wiring

The serial communications cable attaches to the bath through the D-9 connector at the back of the instrument. Figure 8 shows the pin-out of this connector and suggested cable wiring.

10.1.2 Setup

Before operation the serial interface of the bath must first be set up by programming the BAUD rate and other configuration parameters. These parameters are programmed within the serial interface menu. The serial interface parameters menu is outlined in Figure 6.

To enter the serial parameter programming mode first press “EXIT” while pressing “SET” and release to enter the secondary menu. Press “SET” repeatedly until the display

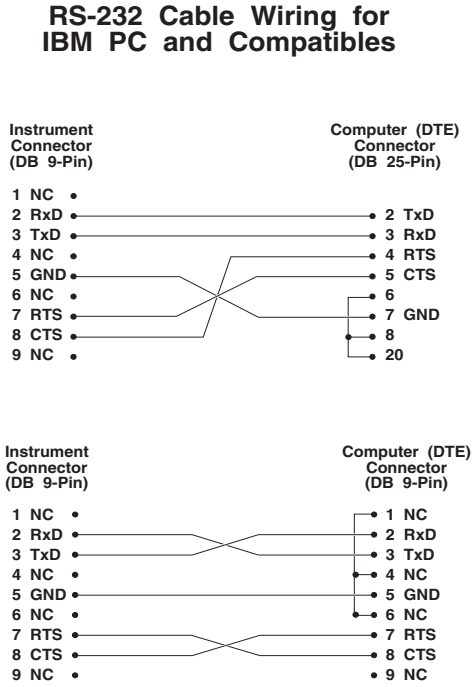

Figure 8 *Serial Communications Cable Wiiring*

원문: Fluke Calibration 7009/7108/7015 7009 설명서 · 제조사 원문 자료입니다. 사양은 제조사 사정에 따라 변경될 수 있습니다.

reads "ProbE". This is the menu selection. Press "UP" repeatedly until the serial interface menu is indicated with "SErIAL". Finally press "SET" to enter the serial parameter menu. In the serial interface parameters menu are the BAUD rate, the sample rate, the duplex mode, and the linefeed parameter.

10.1.2.1 Baud Rate

The baud rate is the first parameter in the menu. The display will prompt with the baud rate parameter by showing "BAUd". Press "SET" to choose to set the baud rate. The current baud rate value will then be displayed. The BAUD rate of the 7009 serial communications may be programmed to 300, 600, 1200, or 2400 baud. The baud rate is pre-programmed to 1200 baud. Use "UP" or "DOWN" to change the baud rate value. Press "SET" to set the BAUD rate to the new value or "EXIT" to abort the operation and skip to the next parameter in the menu.

10.1.2.2 Sample Period

The sample period is the next parameter in the menu and prompted with "SAMPLE". The sample period is the time period in seconds between temperature measurements transmitted from the serial interface. If the sample rate is set to 5 for instance then the 1502 will transmit the current measurement over the serial interface approximately every five seconds. The automatic sampling is disabled with a sample period of 0. Press "SET" to choose to set the sample period. Adjust the period with "UP" or "DOWN" and then use "SET" to set the sample rate to the displayed value.

10.1.2.3 Duplex Mode

The next parameter is the duplex mode indicated with "dUPL". The duplex mode may be set to half duplex ("HALF") or full duplex ("FULL"). With full duplex any commands received by the thermometer via the serial interface will be immediately echoed or transmitted back to the device of origin. With half duplex the commands will be executed but not echoed. The default setting is full duplex. The mode may be changed using "UP" or "DOWN" and pressing "SET".

10.1.2.4 Linefeed

The final parameter in the serial interface menu is the linefeed mode. This parameter enables ("On") or disables ("OFF") transmission of a linefeed character (LF, ASCII 10) after transmission of any carriage-return. The default setting is with linefeed on. The mode may be changed using "UP" or "DOWN" and pressing "SET".

10.1.3 Serial Operation

Once the cable has been attached and the interface set up properly the controller will immediately begin transmitting temperature readings at the programmed rate. The set-point and other commands may be sent to the bath via

원문: Fluke Calibration 7009/7108/7015 7009 설명서 · 제조사 원문 자료입니다. 사양은 제조사 사정에 따라 변경될 수 있습니다.

the serial interface to set the bath and view or program the various parameters. The interface commands are discussed in Section. All commands are ASCII character strings terminated with a carriage-return character (CR, ASCII 13).

10.2 IEEE-488 communication (optional)

The IEEE-488 interface is available as an option. Baths supplied with this option may be connected to a GPIB type communication bus which allows many instruments to be connected and controlled simultaneously.

10.2.1 Setup

To use the IEEE-488 interface first connect an IEEE-488 standard cable to the back of the bath. Next set the device address. This parameter is programmed within the IEEE-488 interface menu. The IEEE-488 interface parameters menu is outlined in Figure 6.

To enter the IEEE-488 parameter programming menu first press “EXIT” while pressing “SET” and release to enter the secondary menu. Press “SET” repeatedly until the display reaches “PrObE”. This is the menu selection. Press “UP” repeatedly until the IEEE-488 interface menu is indicated with “IEEE”. Press “SET” to enter the IEEE-488 parameter menu. The IEEE-488 menu contains the IEEE-488 address parameter.

10.2.1.1 IEEE-488 Interface Address

The IEEE-488 address is prompted with “AddrESS”. Press “SET” to program the address. The default address is 22. Change the device address of the bath if necessary to match the address used by the communication equipment by pressing “UP” or “DOWN” and then “SET”.

10.2.2 IEEE-488 Operation

Commands may now be sent via the IEEE-488 interface to read or set the temperature or access other controller functions. All commands are ASCII character strings and are terminated with a carriage-return (CR, ASCII 13). Interface commands are listed below.

10.3 Interface Commands

The various commands for accessing the bath controller functions via the digital interfaces are listed in this section (see Table 4). These commands are used with both the RS-232 serial interface and the IEEE-488 GPIB interface. In either case the commands are terminated with a carriage-return character. The interface makes no distinction between upper and lower case letters, hence either may be used. Commands may be abbreviated to the minimum number of letters which determines a unique command. A command may be used to either set a parameter or display a parameter depending on whether or not a value is sent with the command following a “=” character. For example “s”<CR> will return

원문: Fluke Calibration 7009/7108/7015 7009 설명서 · 제조사 원문 자료입니다. 사양은 제조사 사정에 따라 변경될 수 있습니다.

Table 4 *Interface Command Summary.*

Command Description	Command Format	Command Example	Returned	Returned Example	Acceptable Values
Display Temperature					
Read current set-point	s[etpoint]	s	set: 999.99 {C or F}	set: 150.00 C	
Set current set-point to n	s[etpoint]=n	s=450			Instrument Range
Read vernier	v[ernier]	v	v: 9.99999	v: 0.00000	
Set vernier to n	v[ernier]=n	v=.00001			Depends on Configuration
Read temperature	t[emperature]	t	t: 9999.99 {C or F}	t: 55.69 C	
Read temperature units	u[nits]	u	u: x	u: c	
Set temperature units:	**u[nits]=c/f**				C or F
Set temperature units to Celsius	u[nits]=c	u=c			
Set temperature units to Fahrenheit	u[nits]=f	u=f			
Secondary Menu					
Read proportional band setting	pr[op-band]	pr	pr: 9.999	pr: 1.59	
Set proportional band to *n*	pr[op-band]=n	pr=0.061			Depends on Configuration
Read cutout setting	c[utout]	c	c: 9999 {x},{xxx}	c: 100 C, in	
Set cutout setting:	**c[utout]=n/r[eset]**				
Set cutout to *n* degrees	c[utout]=n	c=100			Temperature Range
Reset cutout now	c[utout]=r[eset]	c=r			
Read heater power (duty cycle)	po[wer]	po	po: 999 (up to 100)	po: 1	
Configuration Menu					
Probe Menu					
Read D0 calibration parameter	*d0	*d0	d0: 99.999	d0: –25.299	
Set D0 calibration parameter to *n*	*d0=n	*d0=-25.299			–999.9 to 999.9
Read DG calibration parameter	*dg	*dg	dg: 999.99	dg: 186.974	
Set DG calibration parameter to *n*	*dg=n	*dg=186.974			–999.9 to 999.9
Operating Parameters Menu					
Read cutout mode	cm[ode]	cm	cm: {xxxx}	cm: AUTO	
Set cutout mode:	**cm[ode]=r[eset]/a[uto]**				RESET or AUTO

원문: Fluke Calibration 7009/7108/7015 7009 설명서 · 제조사 원문 자료입니다. 사양은 제조사 사정에 따라 변경될 수 있습니다.

Interface Command Summary continued.

Command Description	Command Format	Command Example	Returned	Returned Example	Acceptable Values
Set cutout to be reset manually-	cm[ode]=r[eset]	cm=r			
Set cutout to be reset automatically	cm[ode]=a[uto]	cm=a			
Serial Interface Menu					
Read serial sample setting	sa[mple]	sa	sa: 9	sa: 1	
Set serial sampling setting to *n* seconds	sa[mple]=n	sa=0			0 to 4000
Set serial duplex mode:	**du[plex]=f[ull]/h[alf]**				FULL or HALF
Set serial duplex mode to full	du[plex]=f[ull]	du=f			
Set serial duplex mode to half	du[plex]=h[alf]	du=h			
Set serial linefeed mode:	**lf[eed]=on/of[f]**				ON or OFF
Set serial linefeed mode to on	lf[eed]=on	lf=on			
Set serial linefeed mode to off	lf[eed]=of[f]	lf=of			
Calibration Menu *(Warning: Changing the calibration values may change the instrument accuracy)*					
Read low set-point limit value	*tl[ow]	*tl	tl: 999	tl: –80	
Set low set-point limit to *n*	*tl[ow]=n	*tl=-80			–999.9 to 999.9
Read high set-point limit value	*th[igh]	*th	th: 999	th: 205	
Set high set-point limit to *n*	*th[igh]=n	*th=205			–999.9 to 999.9
Miscellaneous (not on menus)					
Read firmware version number	*ver[sion]	*ver	ver.9999,9.99	ver.2100,3.56	
Read structure of all commands	h[elp]	h	list of commands		
Legend:	[] Optional Command data {} Returns either information n Numeric data supplied by user 9 Numeric data returned to user x Character data returned to user				
Note:	When DUPLEX is set to FULL and a command is sent to READ, the command is returned followed by a carriage return and linefeed. Then the value is returned as indicated in the RETURNED column.				

the current set-point and “s=50.00”<CR> will set the set-point to 50.00 degrees.

In the following list of commands, characters or data within brackets, “[” and “]”, are optional for the command. A slash, “/”, denotes alternate characters or data. Numeric data, denoted by “n”, may be entered in decimal or exponential notation. Bold type characters are literal characters while normal type symbol-

원문: Fluke Calibration 7009/7108/7015 7009 설명서 · 제조사 원문 자료입니다. 사양은 제조사 사정에 따라 변경될 수 있습니다.

izes data. Characters are shown in lower case although upper case may be used. Spaces may be added within command strings and will simply be ignored. Backspace (BS, ASCII 8) may be used to erase the previous character. A terminating CR is implied with all commands.

10.4 Power Control Functions

The digital interface is capable of controlling the heating and cooling functions so that the bath can be remotely operated at any temperature within the range of the bath. To allow the interface to control the heating and the cooling, the front panel controls are disabled by 1) switching the heater switch to LOW, and 2) switching the refrigeration switch to OFF. Otherwise, the interface would not be able to switch these functions off. The 7009 bath has four control functions with the digital interface. These are heater power high/low, cooling on/off, expansion valve open/closed, and back pressure valve open/closed.

10.4.1 Heater Control

To control the heater with the digital interface the front panel heater switch must be set to LOW (250 W). The heater function is controlled with a the "F1" command. Setting the parameter to 0 sets the heater to LOW (250 W) and setting it to 1 sets the heater to HIGH (1000 W). Sending "F1" with no value will cause the controller to return a value showing what the heater setting is. When the heater setting is changed a pop will be heard as the heater relay opens or closes.

10.4.2 Cooling Control

To control the refrigeration power with the digital interface the front panel refrigeration switch must be off. The refrigeration power function is controlled with the "F2" command. Setting the "F2" value to 0 turns the refrigeration off and setting it to 1 turns it on. "F2" alone will return 0 or 1 showing the state of the refrigeration power control.

The "F3" command controls the cooling temperature or expansion valve. As discussed in section 8.5 this valve adjusts the cooling temperature which sets the cooling capacity. Setting "F3" to 0 opens the valve and 1 closes the valve. A command with no value will return the current value. With the valve open the cooling temperature is set with the cooling temperature knob labeled "LOW". This should be adjusted for approximately 5 psi if the bath is to be used as low as -10°C. The knob labeled "HIGH" controls the cooling temperature when the

원문: Fluke Calibration 7009/7108/7015 7009 설명서 · 제조사 원문 자료입니다. 사양은 제조사 사정에 따라 변경될 수 있습니다.

expansion valve is closed. This should be adjusted for approximately 56 psi. when the valve is closed.

Table 6 *Serial Power Control Functions*

Function	Command	0	1
Heater	F1	low	high
Refrigeration	F2	off	on
Expansion valve	F3	open	closed
Back pressure	F4	open	closed

The “F4" command controls the back pressure valve. When the valve is closed the cooling capacity will be significantly reduced. This valve should normally be left open throughout the operating range of the bath. Table 6 summarizes the control functions for heating and cooling. Table 5 shows the recommended control settings for each operating temperature range. The ranges may need to be adjusted depending on the bath and its particular use.

Table 5 *Temperature Range Control Functions*

Range	Heater	Refr.	Expans.
–10 to 15°C	low	on	open
15 to 40°C	low	on	closed
40 to 110°C	low	off	closed

원문: Fluke Calibration 7009/7108/7015 7009 설명서 · 제조사 원문 자료입니다. 사양은 제조사 사정에 따라 변경될 수 있습니다.

11 Bath Calibration

In some instances the user may want to calibrate the bath to improve the temperature set-point accuracy. Calibration is done by adjusting the controller probe calibration constants D0 and DG so that the temperature of the bath as measured with a standard thermometer agrees more closely with the bath set-point. The thermometer used must be able to measure the bath fluid temperature with higher accuracy than the desired accuracy of the bath. By using a good thermometer and carefully following procedure the bath can be calibrated to an accuracy of better than 0.1°C over a range of 50 degrees.

11.1 Calibration Points

In calibrating the bath D0 and DG are adjusted to minimize the set-point error at each of two different bath temperatures. Any two reasonably separated bath temperatures may be used for the calibration however best results will be obtained when using bath temperatures which are just within the most useful operating range of the bath. The farther apart the calibration temperatures the larger will be the calibrated temperature range but the calibration error will also be greater over the range. If for instance 20°C and 80°C are chosen as the calibration temperatures then the bath may achieve an accuracy of say ±0.2°C over the range 20 to 80°C. Choosing 30°C and 70°C may allow the bath to have a better accuracy of maybe ±0.05°C over the range 30 to 70°C but outside that range the accuracy may be only ±0.5°C.

11.2 Measuring the Set-point Error

The first step in the calibration procedure is to measure the temperature errors (including sign) at the two calibration temperatures. First set the bath to the lower setpoint which we will call t_L. Wait for the bath to reach the set-point and allow 15 minutes to stabilize at that temperature. Check the bath stability with the thermometer. When both the bath and the thermometer have stabilized measure the bath temperature with the thermometer and compute the temperature error err_L which is the actual bath temperature minus the set-point temperature. If for example the bath is set for a lower set-point of t_L=20°C and the bath reaches a measured temperature of 19.7°C then the error is –0.3°C.

Next, set the bath for the upper set-point t_H and after stabilizing measure the bath temperature and compute the error err_H. For our example we will suppose the bath was set for 80°C and the thermometer measured 80.1°C giving an error of +0.1°C.

11.3 Computing D0 and DG

Before computing the new values for $\mathbf{D}_O$ and $\mathbf{D}_G$ the current values must be known. The values may be found by either accessing the probe calibration

원문: Fluke Calibration 7009/7108/7015 7009 설명서 · 제조사 원문 자료입니다. 사양은 제조사 사정에 따라 변경될 수 있습니다.

menu from the controller panel or by inquiring through the digital interface. The user should keep a record of these values in case they may need to be restored in the future. The new values D0′ and DG′ are computed by entering the old values for D0 and DG, the calibration temperature set-points t_L and t_H, and the temperature errors errL and errH into the following equations,

$$D_0' = \frac{err_L\,(t_H - D_0) - err_H\,(t_L - D_0)}{t_H - t_L} + D_0$$

$$D_G' = \left[\frac{err_H - err_L}{t_H - t_L} + 1\right] D_G$$

If for example D0 and DG were previously set for –25.229 and err_H were as given above then the new values D0′ and DG′ would be computed as –25.831 and .0028720 respectively. Program the new values D0 and DG into the controller. The new constants will be used the next time the bath temperature is set. Check the calibration by setting the temperature to t_L and t_H and measuring the errors again. If desired the calibration procedure may be repeated again to further improve the accuracy.

11.4 Calibration Example

The bath is to be used between 25 and 75°C and it is desired to calibrate the bath as accurately as possible for operation within this range. The current values for D0 and DG are –25.229 and and 75.00°C. The measured bath temperatures are 24.869 and 74.901°C respectively. Refer to Figure 9 for applying equations to the example data and computing the new probe constants.

원문: Fluke Calibration 7009/7108/7015 7009 설명서 · 제조사 원문 자료입니다. 사양은 제조사 사정에 따라 변경될 수 있습니다.

D0 = -25.229

DG = 0.0028530

t_L = 25.00°C

measured t = 24.869°C

t_H = 75.00°C

measured t = 74.901°C

Compute errors,

err_L = 24.869 - 25.00°C = -0.131°C

err_H = 74.901 - 75.00°C = -0.099°C

Compute C_0,

$$D_0' = \frac{(-0.131)(75.0-(-25.229))-(-0.099)(25.0-(-25.229))}{75.0-25.0}+(-25.229) = -25.392$$

Compute C_G,

$$D_G' = \left[\frac{(-0.099)-(-0.131)}{75.0-25.0}+1\right]0.0028530 = 0.0028548$$

Figure 9 *Sample calibration computations*

원문: Fluke Calibration 7009/7108/7015 7009 설명서 · 제조사 원문 자료입니다. 사양은 제조사 사정에 따라 변경될 수 있습니다.

12 Maintenance

The calibration instrument has been designed with the utmost care. Ease of operation and simplicity of maintenance have been a central theme in the product development. Therefore, with proper care the instrument should require very little maintenance. Avoid operating the instrument in dirty or dusty environments.

- A battery is used to maintain operating parameters in the unit. All operating parameters, including calibration parameters should be checked on a regular basis to insure accuracy and proper operation of the instrument. See the troubleshooting section for the procedure on checking the status of the battery.
- If the outside of the bath becomes soiled, it may be wiped clean with a damp cloth and mild detergent. Do not use harsh chemicals on the surface which may damage the paint.
- Periodically check the fluid level in the bath to ensure that the level has not dropped. A drop in the fluid level affects the stability of the bath. Changes in fluid level are dependent upon several factors specific to the environment in which the equipment is used. A schedule cannot be outlined to meet each environmental setting. Therefore, the first year the bath should be checked weekly with notes kept as to changes in bath fluid. After the first year, the user can set up a maintenance schedule based on the data specific to the application.
- Heat transfer medium lifetime is dependent upon the type of medium and the environment. The fluid should be checked at least every month for the first year and regularly thereafter. This fluid check provides a baseline for knowledge of bath operation with clean, usable fluid. Once some fluids have become compromised, the break down can occur rapidly. Particular attention should be paid to the viscosity of the fluid. A significant change in the viscosity can indicate that the fluid is contaminated, being used outside of its temperature limits, contains ice particles, or is close to a chemical breakdown. Once data has been gathered, a specific maintenance schedule can be outline for the instrument. Refer to the General Operation section (Section 8) for more information about the different types of fluids used in calibration baths.
- Depending on the cleanliness of the environment, the internal parts (parts behind the front cover only) of the cold bath should be cleaned and/or checked at least every month for dust and dirt. Particular attention should be paid to the condensing coil fins. The fins should be vacuumed or brushed free of dust and dirt on a regular basis. Dust and dirt inhibit the operation of the condensing coil and thus compromise the performance and life-time of the cooling system.
- If a hazardous material is spilt on or inside the equipment, the user is responsible for taking the appropriate decontamination steps as outlined by the national safety council with respect to the material. MSDS sheets ap-

원문: Fluke Calibration 7009/7108/7015 7009 설명서 · 제조사 원문 자료입니다. 사양은 제조사 사정에 따라 변경될 수 있습니다.

plicable to all fluids used in the baths should be kept in close proximity to the instrument.

- If the mains supply cord becomes damaged, replace it with a cord with the appropriate gauge wire for the current of the bath. If there are any questions, call a Fluke Calibration Authorized Service Center for more information.
- Before using any cleaning or decontamination method except those recommended by Fluke, users should check with a Fluke Calibration Authorized Service Center to be sure that the proposed method will not damage the equipment.
- If the instrument is used in a manner not in accordance with the equipment design, the operation of the bath may be impaired or safety hazards may arise.
- The over-temperature cut-out should be checked every 6 months to see that it is working properly. In order to check the user selected cut-out, follow the controller directions (Section 8.8) for setting the cut-out. Both the manual and the auto reset option of the cut-out should be checked. Set the bath temperature higher than the cut-out. Check to see if the display flashes cut-out and the temperature is decreasing.

CAUTION: *When checking the over-temperature cut-out, be sure that the temperature limits of the bath fluid are not exceeded. Exceeding the temperature limits of the bath fluid could cause harm to the operator, lab, and instrument.*

12.1 Draining the Bath

The drain is located on the back of the bath. See Figure 4, Back Panel. Locate the drain plug on the end of the drain tube. This drain plug is to be fluid tight until the bath is drained.

The following information is helpful when draining the bath.

1. Always use a container capable of holding the entire load of fluid. Use safety equipment as appropriate.
2. Drain water and low viscosity fluids at room temperature. Normal care must be taken for fluids that may have corrosive or damaging effects on the surrounding facility or equipment.
3. High viscosity oils should be sufficiently low in viscosity to drain effectively. Some oils, such as 710 silicone oil, may need to be heated to 80°C to drain well. The viscosity affects how rapidly it drains as well as how well it flows off of the walls. Appropriate temperature resistant containers and appropriate safety equipment such as face shields, gloves, and body covering should be used.

원문: Fluke Calibration 7009/7108/7015 7009 설명서 · 제조사 원문 자료입니다. 사양은 제조사 사정에 따라 변경될 수 있습니다.

13 Troubleshooting

In the event the bath appears to function abnormally this section may help to find and solve the problem. Several possible problem conditions are described along with likely causes and solutions. If a problem arises please read this section carefully and attempt to understand and solve the problem. If the bath seems faulty or the problem cannot otherwise be solved, then contact a Fluke Calibration Authorized Service Center for assistance.

13.1 Troubleshooting

Problem	Causes and Solutions
The bath does not turn on and the display remains blank	If a fault condition exists upon application of power, the bath will not energize. The bath needs to be plugged in to the line voltage for at least 10 minutes before turning power on. This is only necessary for the first time that the bath is energized or when it is moved from one location to another. If a high or low voltage condition exists for longer than 5 seconds, the compressor is de-energized and the “Mains Out of Range” light on the back panel illuminates indicating a fault condition. Re-energization is automatic upon correction of the fault condition and after a delay cycle of about 10 minutes. High and low voltage protection limits at 230 VAC: Voltage Cut-out: ±12.5% (203 – 257 VAC) Voltage Cut-in: ±7.5% (213 – 247 VAC) See the Caution in the front of this manual for additional information.
The heater indicator LED stays red but the temperature does not increase	If the display does not show “cut-out” and shows the correct bath temperature, consider the following possibilities: **Insufficient heating.** Insufficient heating may be caused by the heater power setting being too low, especially at higher operating temperatures. Switching to the higher heater power switch setting, if available, may solve the problem. **No heating.** This is caused by blown heater fuses and/or burned out heaters. Check the heater fuses to make sure that they are still good. Access the heater fuses by removing the L-shaped panel covering the display electronics. If they are blown, and continue to blow when replaced, the heaters may be shorted. If you suspect that the heaters are shorted or burned out, contact a Fluke Calibration Authorized Service Center for assistance. **Too much cooling.** Try reducing the cooling capacity by increasing the cooling pressure or switching off the cooling altogether.

원문: Fluke Calibration 7009/7108/7015 7009 설명서 · 제조사 원문 자료입니다. 사양은 제조사 사정에 따라 변경될 수 있습니다.

Problem	Causes and Solutions
The controller display flashes "CUT-OUT" and the heater does not operate	If the display flashes "CUT-OUT" alternately with the correct process temperature, check the following: **Wrong cut-out setting.** The cut-out disconnects power to the heaters when the bath temperature exceeds the cut-out set-point. This causes the bath temperature to drop back down to a safe value. If the cut-out mode is set to "AUTO", the heater switches back on when the temperature drops. If the mode is set to "RESET", the heater only comes on again when the temperature is reduced and the cut-out is manually reset by the operator. (Refer to section 8.8.) Check that the cut-out set-point is adjusted to 10 or 20°C above the desired maximum bath operating temperature and that the cut-out mode is set as desired. **Bad cut-out.** If the cut-out activates when the bath temperature is well below the cut-out set-point or the cut-out does not reset when the bath temperature drops and it is manually reset, the cut-out circuitry may be faulty. Try performing the Factory Reset Sequence explained below. **Factory Reset Sequence -** Hold the "SET" and "EXIT" keys down at the same time while powering up the unit. The display shows "-rnrE", the model number, and the firmware version. Each of the controller parameters and calibration constants must be re-programmed. The values can be found on the Report of Calibration that was shipped with the instrument.
The display flashes "CUT-OUT" alternately with an incorrect process temperature	**Low battery.** A problem could exist with the memory back-up battery. If the battery voltage is insufficient to maintain the memory, data may become scrambled causing problems. A nearby large static discharge may also affect data in memory. Access the battery by removing the L-shaped panel covering the display electronics. **Corrupt controller memory.** If the problem reoccurs after the battery is replaced, initialize the memory by performing a Factory Reset Sequence (described in a previous solution).
The controller displays the wrong temperature and the bath continually heats or cools regardless of the set-point value	**Bad control probe.** The bath control probe may be disconnected, burned out, or shorted. Check first that the probe is connected properly to the socket in the rear of the bath labeled "PROBE". The probe may be checked with an ohmmeter to see if it is open or shorted. The probe is a platinum 4-wire Din 43760 type. The resistance should read 0.2 to 2.0 ohms between pins 1 and 2 on the probe connector and 0.2 to 2.0 ohms between pins 3 and 4. The resistance should read from 100 to 300 ohms between pins 1 and 4 depending on its current temperature. **Corrupt controller memory.** Initialize the memory by performing a Factory Reset Sequence (described in a previous solution).

원문: Fluke Calibration 7009/7108/7015 7009 설명서 · 제조사 원문 자료입니다. 사양은 제조사 사정에 따라 변경될 수 있습니다.

Problem	Causes and Solutions
The controller controls or attempts to control at an inaccurate temperature	If the controller appears to operate normally except that the bath's temperature does not agree with the temperature measured by the user's reference thermometer to within the specified accuracy, consider the following: **Erroneous parameters.** Check that the calibration parameters are all correct according to the Report of Calibration. If not, reprogram the constants. If the controller does not keep the correct parameters, the memory backup battery may be weak causing errors in data. See "Low Battery" in a previous solution. **Poor uniformity.** There may be an actual difference between the bath's control probe and the reference thermometer due to excess gradients in the bath. Check that the bath has an adequate amount of fluid in the tank and that the stirrer is operating properly. Also check that the reference thermometer and control probe are both fully inserted into the bath to minimize temperature gradient errors. **Bad control probe.** Check that the control probe has not been struck, bent, or damaged. Refer to the previous solution for how to check the probe's resistance.
The controller shows that it is controlling at the proper temperature, but the bath temperature is unstable	If the bath does not achieve the expected degree of temperature stability when measured using a thermometer, consider the following: **Wrong proportional band setting.** If the proportional band is set too narrow, the bath will oscillate causing poor stability. In this case, increase the width of the proportional band. If the proportional band setting is too wide, the long-term stability of the bath is affected. In this case decrease the width of the band. (Refer to section 9.7.) **Bath fluid is too thick.** Make sure that the bath fluid used is less than 50 centi-Stokes (10 is ideal) at the temperature at which the bath is controlling. Check the fluid manufacturer's specifications. You should also change the bath fluid regularly and if it changes colors or becomes too thick. **Bad control probe.** Check that the control probe has not been struck, bent, or damaged. Refer to the previous solution for how to check the probe's resistance.
The controller alternately heats for a while then cools	**Wrong proportional band setting.** If the proportional band is set too narrow, the bath will oscillate between too much heating and too much cooling causing instability. Increase the width of the proportional band until the temperature stabilizes. (Refer to section 9.7.)
The bath does not achieve low temperatures	**Too much heating.** Check that the control indicator glows green showing that the controller is attempting to cool. The heaters may be disabled as a test by temporarily removing the heater fuses. Check the refrigeration system by switching the heater to low, switching the cooling on, setting the cooling pressure to approximately 7 PSI, and setting the cooling temperature to 10-15°C below the bath set point. The bath should then cool as quickly as possible to the new set point. **Insufficient cooling.** This may be caused by lack of refrigerant because of a leak in the system.

원문: Fluke Calibration 7009/7108/7015 7009 설명서 · 제조사 원문 자료입니다. 사양은 제조사 사정에 따라 변경될 수 있습니다.

Problem	Causes and Solutions
Power Up	The unit is equipped with external operator accessible fuses. If a fuse blows, it may be due to a power surge or failure of a component. Replace the fuse once. DO NOT replace the fuse with one of a higher current rating. Always replace the fuse with one of the same rating, voltage, and type. If the fuse blows a second time, it is likely caused by failure of a component part. Contact a Fluke Calibration Authorized Service Center (Section 1.3) for assistance.
The controller does not maintain controller parameters or parameters are reset each time the power to the unit is removed	**Note:** Before performing the memory check,you need to record the controller calibration parameters (found in the CAL menu of the instrument) and any user-adjusted parameters that you have changed (such as the programmable set points and proportional band). **Memory Check** Doing a memory check is the easiest way to verify the ability of the battery to maintain controller parameters. 1. Power off the instrument. 2. Disconnect the instrument from AC power for 10 seconds. 3. Reconnect the AC power and power on the instrument. 4. If the display shows InIT and/or the cycle count shows a low number such as 0002, the battery is spent and should be replaced. Contact a Fluke Calibration Authorized Service Center for assistance. 5. After replacing the battery, you must reprogram the calibration and user-adjustable parameters into the controller.

원문: Fluke Calibration 7009/7108/7015 7009 설명서 · 제조사 원문 자료입니다. 사양은 제조사 사정에 따라 변경될 수 있습니다.