7108

Calibration Bath

User's Guide

PN 3729343
January 2014
© 2014 Fluke Corporation. All rights reserved. Specifications are subject to change without notice.
All product names are trademarks of their respective companies.

원문: Fluke Calibration 7009/7108/7015 7108 설명서 · 제조사 원문 자료입니다. 사양은 제조사 사정에 따라 변경될 수 있습니다.

LIMITED WARRANTY AND LIMITATION OF LIABILITY

Each Fluke product is warranted to be free from defects in material and workmanship under normal use and service. The warranty period is one year and begins on the date of shipment. Parts, product repairs, and services are warranted for 90 days. This warranty extends only to the original buyer or end-user customer of a Fluke authorized reseller, and does not apply to fuses, disposable batteries, or to any product which, in Fluke's opinion, has been misused, altered, neglected, contaminated, or damaged by accident or abnormal conditions of operation or handling. Fluke warrants that software will operate substantially in accordance with its functional specifications for 90 days and that it has been properly recorded on non-defective media. Fluke does not warrant that software will be error free or operate without interruption.

Fluke authorized resellers shall extend this warranty on new and unused products to end-user customers only but have no authority to extend a greater or different warranty on behalf of Fluke. Warranty support is available only if product is purchased through a Fluke authorized sales outlet or Buyer has paid the applicable international price. Fluke reserves the right to invoice Buyer for importation costs of repair/replacement parts when product purchased in one country is submitted for repair in another country.

Fluke's warranty obligation is limited, at Fluke's option, to refund of the purchase price, free of charge repair, or replacement of a defective product which is returned to a Fluke authorized service center within the warranty period.

To obtain warranty service, contact your nearest Fluke authorized service center to obtain return authorization information, then send the product to that service center, with a description of the difficulty, postage and insurance prepaid (FOB Destination). Fluke assumes no risk for damage in transit. Following warranty repair, the product will be returned to Buyer, transportation prepaid (FOB Destination). If Fluke determines that failure was caused by neglect, misuse, contamination, alteration, accident, or abnormal condition of operation or handling, including overvoltage failures caused by use outside the product's specified rating, or normal wear and tear of mechanical components, Fluke will provide an estimate of repair costs and obtain authorization before commencing the work. Following repair, the product will be returned to the Buyer transportation prepaid and the Buyer will be billed for the repair and return transportation charges (FOB Shipping Point).

THIS WARRANTY IS BUYER'S SOLE AND EXCLUSIVE REMEDY AND IS IN LIEU OF ALL OTHER WARRANTIES, EXPRESS OR IMPLIED, INCLUDING BUT NOT LIMITED TO ANY IMPLIED WARRANTY OF MERCHANTABILITY OR FITNESS FOR A PARTICULAR PURPOSE. FLUKE SHALL NOT BE LIABLE FOR ANY SPECIAL, INDIRECT, INCIDENTAL, OR CONSEQUENTIAL DAMAGES OR LOSSES, INCLUDING LOSS OF DATA, ARISING FROM ANY CAUSE OR THEORY.

Since some countries or states do not allow limitation of the term of an implied warranty, or exclusion or limitation of incidental or consequential damages, the limitations and exclusions of this warranty may not apply to every buyer. If any provision of this Warranty is held invalid or unenforceable by a court or other decision-maker of competent jurisdiction, such holding will not affect the validity or enforceability of any other provision.

Fluke Corporation P.O. Box 9090 Everett, WA 98206-9090 U.S.A.	Fluke Europe B.V. P.O. Box 1186 5602 BD Eindhoven The Netherlands

11/99

To register your product online, visit register.fluke.com

원문: Fluke Calibration 7009/7108/7015 7108 설명서 · 제조사 원문 자료입니다. 사양은 제조사 사정에 따라 변경될 수 있습니다.

Table of Contents

Chapter	Title	Page
1	**Before You Start**	**1-1**
1.1	Introduction	1-1
1.2	Symbols Used	1-1
1.3	Safety Information	1-2
1.3.1	WARNINGS	1-2
1.3.2	CAUTIONS	1-4
1.4	Authorized Service Centers	1-6
2	**Specifications and Environmental Conditions**	**2-1**
2.1	Specifications	2-1
2.2	Environmental Conditions	2-2
2.3	Warranty	2-2
3	**Quick Start**	**3-1**
3.1	Unpacking	3-1
3.2	Set Up	3-1
3.3	Power	3-2
3.4	Setting the Temperature	3-2
4	**Installation**	**4-1**
4.1	Bath Environment	4-1
4.2	“Dry-out” Period	4-1
4.3	Bath Preparation and Filling	4-2
4.4	Probe	4-2
4.5	Power	4-2
5	**Bath Use**	**5-1**
5.1	General	5-1
5.2	Comparison Calibration	5-2
5.3	Calibration of Multiple Probes	5-2

원문: Fluke Calibration 7009/7108/7015 7108 설명서 · 제조사 원문 자료입니다. 사양은 제조사 사정에 따라 변경될 수 있습니다.

6 Parts and Controls 6-1

6.1 Front Control Panel 6-1
6.2 Back Panel 6-2

7 General Operation 7-1

7.1 Switching to 230 V Operation 7-1
7.2 Bath Fluid 7-1
7.2.1 Temperature Range 7-1
7.2.2 Viscosity 7-2
7.2.3 Specific Heat 7-2
7.2.4 Thermal Conductivity 7-2
7.2.5 Thermal Expansion 7-2
7.2.6 Electrical Resistivity 7-2
7.2.7 Fluid Lifetime 7-2
7.2.8 Safety 7-3
7.2.9 Cost 7-3
7.2.10 Commonly Used Fluids 7-3
7.2.10.1 Water 7-3
7.2.10.2 Ethylene Glycol 7-4
7.2.10.3 Methanol 7-4
7.2.10.4 Mineral Oil 7-4
7.2.10.5 Silicone Oils 7-4
7.2.11 Fluid Characteristics Charts 7-4
7.2.11.2 About the Graph 7-5
7.3 Stirring 7-7
7.4 Power 7-8
7.5 Heater/Cooling 7-8
7.6 Fluid Drain 7-8
7.7 Temperature Controller 7-8

8 Controller Operation 8-1

8.1 Bath Temperature 8-1
8.2 Temperature Set-point 8-1
8.2.1 Programmable Set-points 8-1
8.2.2 Set-point Value 8-3
8.2.3 Set-point Vernier 8-3
8.3 Temperature Scale Units 8-4
8.4 Secondary Menu 8-5
8.5 Thermal Electric Devices (TEDs) 8-5
8.6 Proportional Band 8-6
8.7 Controller Configuration 8-7
8.8 Probe Parameters 8-8
8.8.1 D0 8-8
8.8.2 Dg 8-8
8.9 Serial Interface Parameters 8-8
8.9.1 Baud Rate 8-8
8.9.2 Sample Period 8-9
8.9.3 Duplex Mode 8-9
8.9.4 Linefeed 8-10
8.10 IEEE-488 Parameters 8-10
8.10.1 IEEE-488 Address 8-10

원문: Fluke Calibration 7009/7108/7015 7108 설명서 · 제조사 원문 자료입니다. 사양은 제조사 사정에 따라 변경될 수 있습니다.

TS-TL-FLK-016

we measure, we calibrate, we validate.
㈜테솔 · www.tessol.com TS-TL-FLK-016 4 / 64
KOLAS 국제공인교정기관 · ISO/IEC 17025

Contents (continued)

9 Digital Communication Interface 9-1

9.1 Serial Communications 9-1
9.1.1 Wiring 9-1
9.1.2 Setup 9-1
9.1.2.1 Baud rate 9-2
9.1.2.2 Sample Period 9-2
9.1.2.3 Duplex Mode 9-2
9.1.2.4 Linefeed 9-2
9.1.3 Serial Operation 9-2
9.2 IEEE-488 Communication 9-2
9.2.1 Setup 9-3
9.2.1.1 IEEE-488 Interface Address 9-3
9.2.2 IEEE-488 Operation 9-3
9.3 Interface Commands 9-4

10 Calibration Procedure 10-1

11 Maintenance 11-1

11.1 Draining the Bath 11-2

12 Troubleshooting 12-1

12.1 Troubleshooting 12-1
12.1.1 Master Reset Sequence 12-2
12.2 CE Comments 12-3
12.2.1 EMC Directive 12-3
12.2.2 Directive (Safety) 12-3

원문: Fluke Calibration 7009/7108/7015 7108 설명서 · 제조사 원문 자료입니다. 사양은 제조사 사정에 따라 변경될 수 있습니다.

원문: Fluke Calibration 7009/7108/7015 7108 설명서 · 제조사 원문 자료입니다. 사양은 제조사 사정에 따라 변경될 수 있습니다.

List of Tables

Table	Title	Page
1.	International Electrical Symbols	1-1
2.	Specifications	2-1
3.	Table of various bath fluids and their properties	7-7
4.	Proportional Band — Fluid Table	8-7
5.	Interface Command Summary	9-5
6.	Interface Command Summary continued	9-5

원문: Fluke Calibration 7009/7108/7015 7108 설명서 · 제조사 원문 자료입니다. 사양은 제조사 사정에 따라 변경될 수 있습니다.

7108
User's Guide

원문: Fluke Calibration 7009/7108/7015 7108 설명서 · 제조사 원문 자료입니다. 사양은 제조사 사정에 따라 변경될 수 있습니다.

List of Figures

Figure	Title	Page
1.	Front Panel	6-2
2.	Back Panel	6-4
3.	Chart of various bath fluids and their properties	7-6
4.	Controller Operation Flowchart	8-2
5.	Bath temperature fluctuation at various proportional band settings	8-6
6.	Serial Communications Cable Wiring	9-1

원문: Fluke Calibration 7009/7108/7015 7108 설명서 · 제조사 원문 자료입니다. 사양은 제조사 사정에 따라 변경될 수 있습니다.

원문: Fluke Calibration 7009/7108/7015 7108 설명서 · 제조사 원문 자료입니다. 사양은 제조사 사정에 따라 변경될 수 있습니다.

Chapter 1
Before You Start

1.1 Introduction

The Hart Scientific 7108 is a precise constant temperature bath. An innovative state of the art solid-state temperature controller has been incorporated which maintains the bath temperature with extreme stability. A lid to cover the bath opening is required to reach the published stability. The controller uses a microcontroller to execute the many operating functions.

User interface is provided by the 8-digit LED display and four buttons. Digital remote communications is available with a RS-232 or optionally with a IEEE-488 interface.

The tank for the 7108 is stainless steel and holds 13.2 gallons (51 liters).

1.2 Symbols Used

Table 1 lists the International Electrical Symbols. Some or all of these symbols may be used on the instrument or in this manual.

Table 1 International Electrical Symbols

Symbol	Description
~	AC (Alternating Current)
≂	AC-DC
	Battery
CE	CE Complies with European Union Directives
⎓	DC
	Double Insulated
	Electric Shock
	Fuse
	PE Ground
	Hot Surface (Burn Hazard)
	Read the User's Manual (Important Information)
O	Off

원문: Fluke Calibration 7009/7108/7015 7108 설명서 · 제조사 원문 자료입니다. 사양은 제조사 사정에 따라 변경될 수 있습니다.

I	On
	Canadian Standards Association
CAT II	OVERVOLTAGE (Installation) CATEGORY II, Pollution Degree 2 per IEC1010-1 refers to the level of Impulse Withstand Voltage protection provided. Equipment of OVERVOLTAGE CATEGORY II is energy-consuming equipment to be supplied from the fixed installation. Examples include household, office, and laboratory appliances.
N10140	C-TIC Australian EMC Mark
	The European Waste Electrical and Electronic Equipment (WEEE) Directive (2002/96/EC) mark.

1.3 Safety Information

Use this instrument only as specified in this manual. Otherwise, the protection provided by the instrument may be impaired.

The following definitions apply to the terms “Warning” and “Caution”.

- “WARNING” identifies conditions and actions that may pose hazards to the user.
- “CAUTION” identifies conditions and actions that may damage the instrument being used.

1.3.1 WARNINGS

⚠ WARNINGS

To avoid personal injury, follow these guidelines.

GENERAL

- **DO NOT use the instrument for any application other than calibration work. The instrument was designed for temperature calibration. Any other use of the instrument may cause unknown hazards to the user.**
- **DO NOT use the instrument in environments other than those listed in the user’s guide.**
- **DO NOT overfill the bath. Overflowing extremely cold or hot fluid may be harmful to the operator. See Section 4.3, Bath Preparation and Filling, for specific instructions.**
- **Follow all safety guidelines listed in the user’s manual.**
- **Calibration Equipment should only be used by Trained Personnel.**
- **If this equipment is used in a manner not specified by the manufacturer, the protection provided by the equipment may be impaired.**

원문: Fluke Calibration 7009/7108/7015 7108 설명서 · 제조사 원문 자료입니다. 사양은 제조사 사정에 따라 변경될 수 있습니다.

- **Before initial use, or after transport, or after storage in humid or semi-humid environments, or anytime the instrument has not been energized for more than 10 days, the instrument needs to be energized for a "dry-out" period of 2 hours before it can be assumed to meet all of the safety requirements of the IEC 1010-1. If the product is wet or has been in a wet environment, take necessary measures to remove moisture prior to applying power such as storage in a low humidity temperature chamber operating at 50 °C for 4 hours or more.**
- **Overhead clearance is required. Do not place the instrument under a cabinet or other structure. Always leave enough clearance to allow for safe and easy insertion and removal of probes.**
- **The instrument is intended for indoor use only.**
- **The bath is a precision instrument. Although it has been designed for optimum durability and trouble free operation, it must be handled with care. Position the bath before the tank is filled with fluid by rolling it into place. DO NOT attempt to lift the bath. DO NOT move a bath filled with fluid.**

BURN HAZARD

- **Extremely cold temperatures may be present in this equipment. Freezer burns and frostbite may result if personnel fail to observe safety precautions.**
- **High temperatures may be present in this equipment. Fires and severe burns may result if personnel fail to observe safety precautions.**

ELECTRICAL HAZARD

- **These guidelines must be followed to ensure that the safety mechanisms in this instrument will operate properly. This instrument must be plugged into an AC electric outlet of the appropriate voltage and frequency (see Specifications). The power cord of the instrument is equipped with a three-pronged grounding plug for your protection against electrical shock hazards. It must be plugged directly into a properly grounded three-prong receptacle. The receptacle must be installed in accordance with local codes and ordinances. Consult a qualified electrician. DO NOT use an extension cord or adapter plug.**
- **DO use a ground fault interrupt device. This instrument contains a fluid. A ground fault device is advised in case fluid is present in the electrical system and could cause an electrical shock.**

- **Always replace the power cord with an approved cord of the correct rating and type. If you have questions, contact an Authorized Service Center (see Section 1.3).**
- **High voltage is used in the operation of this equipment. Severe injury or death may result if personnel fail to observe the safety precautions. Before working inside the equipment, turn off the power and disconnect the power cord.**

BATH FLUIDS

- **Fluids used in this bath may produce noxious or toxic fumes under certain circumstances. Consult the fluid manufacturer's MSDS (Material Safety Data Sheet). Proper ventilation and safety precautions must be observed.**
- **The instrument is equipped with a soft cutout (user settable firmware) and a hard cutout (set at the factory). Check the flash point, boiling point, or other fluid characteristic applicable to the circumstances of the bath operation. Ensure that the soft cutout is adjusted to the fluid characteristics of the application. As a guideline, the soft cutout should be set 10 °C to 15 °C below the flash point of the bath fluid. See Section 7.2, Heat Transfer Fluid, for specific information on bath fluids and Section 9.8, Cutout.**

1.3.2 CAUTIONS

⚠ CAUTIONS

- **To avoid possible damage to the instrument, follow these guidelines.**
- **Use only a grounded AC mains supply of the appropriate voltage to power the bath. The bath requires 3 amps at 115 VAC (±10 %), 50/60 Hz (1.6 amps at 230 VAC [±10 %], 50/60 Hz, switchable).**
- **Always operate the bath in room temperatures between 5-45 °C (41-113 °F). Allow sufficient air circulation by leaving at least 6 inches of space between the bath and nearby objects. Overhead clearance needs to allow for safe and easy insertion and removal of probes for calibration.**
- **The bath is equipped with operator accessible fuses. If a fuse blows, it may be due to a power surge or failure of a component. Replace the fuse once. If the fuse blows a second time, it is likely caused by failure of a component part. If this occurs, contact Hart Scientific Customer Service. Always replace the fuse with one of the same rating, voltage, and type. Never replace the fuse with one of a higher current rating.**
- **If a mains supply power fluctuation occurs, immediately turn off the bath. Wait until the power has stabilized before re-energizing the bath.**

원문: Fluke Calibration 7009/7108/7015 7108 설명서 · 제조사 원문 자료입니다. 사양은 제조사 사정에 따라 변경될 수 있습니다.

- **The bath is a precision instrument. Although it has been designed for optimum durability and trouble free operation, it must be handled with care. The instrument should not be operated in excessively dusty or dirty environments. Do not operate near flammable materials.**
- **If the bath is operated at higher temperatures where fluid vaporization is significant, a fume hood should be used.**
- **When filling the tank, ensure the immersion coils are completely covered.**
- **DO NOT operate the bath without fluid.**
- **DO NOT overfill the bath. Overflowing fluid may damage the electrical system. See Section 4.3, Bath Preparation and Filling, for specific instructions.**
- **Read Section 5, Bath Use, before placing the bath into service.**
- **DO NOT change the values of the bath calibration constants from the factory set values. The correct setting of these parameters is important to the safety and proper operation of the bath.**
- **The Factory Reset Sequence should be performed only by authorized personnel if no other action is successful in correcting a malfunction. You must have a copy of the most recent Report of Test to restore the test parameters.**
- **DO NOT operate this instrument in an excessively wet, oily, dusty, or dirty environment.**
- **Most probes have handle temperature limits. Be sure that the probe handle temperature limit is not exceeded in the air above the instrument.**
- **The instrument and any thermometer probes used with it are sensitive instruments that can be easily damaged. Always handle these devices with care. Do not allow them to be dropped, struck, stressed, or overheated.**
- **This bath is not designed to be portable. Therefore, moving the bath once it has been installed should be kept to a minimum. Never move a bath that is full of fluid. This action could be extremely dangerous and could result in personal injury to the person moving the bath.**
- **If the bath must be moved, be sure to drain the fluid to prevent any injury. To safely move the bath, two people are required.**

1.4 Authorized Service Centers

Please contact one of the following authorized Service Centers to coordinate service on your Hart product:

Fluke Corporation, Hart Scientific Division
799 E. Utah Valley Drive
American Fork, UT 84003-9775
USA
Phone: +1.801.763.1600
Telefax: +1.801.763.1010
E-mail: support@hartscientific.com

Fluke Nederland B.V.
Customer Support Services
Science Park Eindhoven 5108
5692 EC Son
NETHERLANDS
Phone: +31-402-675300
Telefax: +31-402-675321
E-mail: ServiceDesk@fluke.nl

Fluke Int'l Corporation
Service Center - Instrimpex
Room 2301 Sciteck Tower
22 Jianguomenwai Dajie
Chao Yang District
Beijing 100004, PRC
CHINA
Phone: +86-10-6-512-3436
Telefax: +86-10-6-512-3437
E-mail: xingye.han@fluke.com.cn

원문: Fluke Calibration 7009/7108/7015 7108 설명서 · 제조사 원문 자료입니다. 사양은 제조사 사정에 따라 변경될 수 있습니다.

Fluke South East Asia Pte Ltd.

Fluke ASEAN Regional Office

Service Center

60 Alexandra Terrace #03-16

The Comtech (Lobby D)

118502

SINGAPORE

Phone: +65 6799-5588

Telefax: +65 6799-5588

E-mail: antng@singa.fluke.com

When contacting these Service Centers for support, please have the following information available:

- Model Number
- Serial Number
- Voltage
- Complete description of the problem

7108
Users Guide

1-8

원문: Fluke Calibration 7009/7108/7015 7108 설명서 · 제조사 원문 자료입니다. 사양은 제조사 사정에 따라 변경될 수 있습니다.

Chapter 2
Specifications and Environmental Conditions

2.1 Specifications

See Table 2.

Table 2. Specifications

Specifications	7108
Operating Range	20 to 30 °C (68 to 86 °F) with ambient temperature of 25 °C (77 °F)
Set-point Accuracy	±0.5 °C (±0.9 °F)
Display Resolution	0.01
Set-point Resolution	0.001
Vernier	0.000032
Ambient Temperature	5 to 45 °C (41 to 113 °F)
Typical short and long term temperature stability	Water at 25 °C: ±0.002 °C (±0.0036 °F) Mineral Oil at 25 °C: ±0.004 °C (±0.0072 °F)
Temperature Gradients using Water	±0.005 °C (±0.009 °F)
Cooling capacity	100 watt thermoelectric
Controller	Hybrid analog/digital controller with data retention
Over Temperature Control	None
Power Requirements	115 VAC (±10 %), 50/60 Hz, 3 A (230 VAC [±10 %], 50/60 Hz, 1.6 A, optional), 350 W switchable
Work area	14"W x 8"H x 14"F–B 35.5 cm x 30.5 cm x 35.5cm
Tank Capacity	13.2 gallons (51 liters)
Exterior Dimensions	19.25“ W x 16.25"H x 25”D 48.9 cm x 41.3 cm x 63.5 cm
Weight	75 lb. / 35 kg

원문: Fluke Calibration 7009/7108/7015 7108 설명서 · 제조사 원문 자료입니다. 사양은 제조사 사정에 따라 변경될 수 있습니다.

2.2 Environmental Conditions

Although the instrument has been designed for optimum durability and trouble-free operation, it must be handled with care. The instrument should not be operated in an excessively dusty or dirty environment. Maintenance and cleaning recommendations can be found in the Maintenance Section of this manual.

The instrument operates safely under the following conditions:

- temperature range: 5–45 °C (41–113 °F)
- ambient relative humidity: 15 – 50 %
- pressure: 75kPa–106kPa
- mains voltage within ±10 % of nominal
- vibrations in the calibration environment should be minimized
- altitude does not affect the performance or safety of the unit

원문: Fluke Calibration 7009/7108/7015 7108 설명서 · 제조사 원문 자료입니다. 사양은 제조사 사정에 따라 변경될 수 있습니다.

Chapter 3
Quick Start

⚠ CAUTION:

Read section 5 entitled bath use before placing the bath in service. Incorrect handling can damage the bath and void the warranty.

This section gives a brief summary of the steps required to set up and operate the 7108 bath. This should be used as a general overview and reference and not as a substitute for the remainder of the manual. Please read Section4 through6 carefully before operating the bath.

3.1 Unpacking

Unpack the bath carefully and inspect it for any damage that may have occurred during shipment. If there is shipping damage, notify the carrier immediately.

Verify that all components are present:

- 7108 Bath
- Controller Probe
- Access Hole Cover
- Manual

If you are missing any item, please contact an Authorized Service Center (see Section 1.4).

3.2 Set Up

Set up of the bath requires careful unpacking and placement of the bath, filling the bath with fluid, installing the probe and connecting the power. Allow six inches of space on both sides of the bath for proper airflow. Consult Section4 for detailed instructions for proper installation of the bath. Be sure to place the bath in a safe, clean and level location.

Fill the bath tank with an appropriate liquid. For operation at moderate bath temperatures, clean distilled water works well. Carefully pour the fluid into the bath tank through the large rectangular access hole above the tank avoiding spilling any fluid. The fluid must not exceed a height of 1/2 inch below the bath lid.

The control probe must be inserted through the lid into the bath and plugged into the socket at the back of the bath.

원문: Fluke Calibration 7009/7108/7015 7108 설명서 · 제조사 원문 자료입니다. 사양은 제조사 사정에 따라 변경될 수 있습니다.

3.3 Power

Plug the bath power cord into a mains outlet of the proper voltage, frequency, and current capability. Typically this will be 115 VAC (±10 %), 50/60 Hz, 3 A (230 VAC [±10 %] 50/60 Hz, 1.6 A switchable). The bath will turn on and begin to heat or cool to reach the previously programmed temperature set-point. The front panel LED display will indicate the actual bath temperature.

3.4 Setting the Temperature

In the following discussion a solid box around the word SET, UP, EXIT or DOWN indicates the panel button while the dotted box indicates the display reading. Explanation of the button or display reading are to the right of each button or display value.

To view or set the bath temperature set-point proceed as follows. The front panel LED display normally shows the actual bath temperature.

24.68 C Bath temperature display

When “SET” is pressed the display shows the set-point memory that is currently being used and its value. Eight set-point memories are available.

SET Access set-point selection

1. 25.0 Set-point 1, 25.0 °C currently used

Press “SET” to select this memory and access the set-point value.

SET Access set-point value

C 25.00 Current value of set-point 1, 25.00 °C

Press “UP” or “DOWN” to change the set-point value.

UP Increment display

C 30.00 New set-point value

원문: Fluke Calibration 7009/7108/7015 7108 설명서 · 제조사 원문 자료입니다. 사양은 제조사 사정에 따라 변경될 수 있습니다.

Press “SET” to accept the new value and display the vernier value. The bath begins heating or cooling to the new set-point.

Store new set-point, access vernier

0.00000 Current vernier value

Press “EXIT” and the bath temperature is displayed again.

Return to the temperature display

24.73 C Bath temperature display

The bath heats or cools until it reaches the new set-point temperature.

To obtain optimum control stability adjust the proportional band as discussed in Section 8.6.

원문: Fluke Calibration 7009/7108/7015 7108 설명서 · 제조사 원문 자료입니다. 사양은 제조사 사정에 따라 변경될 수 있습니다.

7108
Users Guide

3-4

원문: Fluke Calibration 7009/7108/7015 7108 설명서 · 제조사 원문 자료입니다. 사양은 제조사 사정에 따라 변경될 수 있습니다.

Chapter 4
Installation

⚠ CAUTION:

Read section 5 entitled bath use before placing the bath in service. Incorrect handling can damage the bath and void the warranty.

This bath is not designed to be portable. Therefore, moving the bath once it has been installed should be kept to a minimum.

⚠ CAUTION:

Never move a bath that is full of fluid. This action could be extremely dangerous and could result in personal injury to the person moving the bath.

If the bath must be moved, be sure to drain the fluid to prevent any injury. To safely move the bath, two people are required.

4.1 Bath Environment

The Model 7108 bath is a precision instrument which should be located in an appropriate environment. The location should be free of drafts, extreme temperatures and temperature changes, dirt, etc. The surface where the bath is placed must be level.

If used at higher temperatures where fluid vaporization is significant, a fume hood should be used.

4.2 “Dry-out” Period

Before initial use, after transport, and any time the instrument has not been energized for more than 10 days, the bath will need to be energized for a “dry-out” period of 1-2 hours before it can be assumed to meet all of the safety requirements of the IEC 1010-1.

원문: Fluke Calibration 7009/7108/7015 7108 설명서 · 제조사 원문 자료입니다. 사양은 제조사 사정에 따라 변경될 수 있습니다.

4.3 Bath Preparation and Filling

The Model 7108 bath is not provided with a fluid. Various fluids are available from Hart Scientific and other sources. Depending on the desired temperature range, any of the following fluids, as well as others, may be used in the bath:

- Water
- Ethylene Glycol/Water
- Methanol
- Mineral oil
- Silicone oil

Fluids are discussed in detail in Section 7.2.

Remove any access hole cover from the bath and check the tank for foreign matter (dirt, remnant packing material, etc.). Use clean unpolluted fluid. Carefully fill the bath through the large square access hole to a level that will allow for stirring and thermal expansion. The fluid should never exceed a height of 1/2" below the top of the tank. Carefully monitor the bath fluid level as the bath temperature rises to prevent overflow or splashing. Remove excess fluid if necessary and with caution if the fluid is hot.

Be careful to prevent bath fluid from spilling on the stirring motor while filling

⚠ *NOTE:*

Under filling may reduce bath performance and may possibly damage the bath TEDs.

4.4 Probe

Inspect the bath controller probe. This probe should not be bent or damaged in any way. Reasonable caution should be used in handling this probe as it contains a precision thermistor sensor. If damaged, the probe can be replaced. Contact Hart Scientific Customer Service for assistance.

Insert the probe into the 1/4 inch probe hole at the center of the stirrer motor cover. The tip of the probe must be well immersed in the fluid. The probe connector is plugged into the rear of the bath into the socket labeled “PROBE”.

4.5 Power

With the bath power switch off, plug the bath into an AC mains outlet of the appropriate voltage, frequency, and current capacity. Normally this will be 115 VAC (±10 %), 50/60 Hz, 3 A (or 230 VAC [±10 %], 50/60 Hz, 1.6 A switchable).

Be sure the stirring motor power cord is plugged into the “STIRRER” socket at the back of the bath.

원문: Fluke Calibration 7009/7108/7015 7108 설명서 · 제조사 원문 자료입니다. 사양은 제조사 사정에 따라 변경될 수 있습니다.

TS-TL-FLK-016

we measure, we calibrate, we validate. ㈜테솔 · www.tessol.com TS-TL-FLK-016 26 / 64
KOLAS 국제공인교정기관 · ISO/IEC 17025

Chapter 5
Bath Use

READ BEFORE PLACING THE BATH IN SERVICE

The information in this section is for general information only. It is not designed to be the basis for calibration laboratory procedures. Each laboratory will need to write their own specific procedures.

5.1 General

Be sure to select the correct fluid for the temperature range of the calibration. Bath fluids should be selected to operate safely with adequate thermal properties to meet the application requirements. Also, be aware that some fluids expand and could overflow the bath if not watched. Refer to General Operation, section 7, for information specific to fluid selection and to the MSDS sheet specific to the fluid selected. Generally, baths are set to one temperature and used to calibrate probes only at that single temperature. This means that the type of bath fluid does not have to change. Additionally, the bath can be left energized reducing the stress on the system.

It is advisable to wipe the probe with a clean soft cloth or paper towel before inserting it into another bath. This prevents the mixing of fluids from one bath to another. If the probe has been calibrated in liquid salt, carefully wash the probe in warm water and dry completely before transferring it to another fluid. Always be sure that the probe is completely dry before inserting it into a hot fluid. Some of the high temperature fluids react violently to water or other liquid mediums. Be aware that cleaning the probe can be dangerous if the probe has not cooled to room temperature. Additionally, high temperature fluids may ignite paper towels if the probe has not been cooled.

For optimum accuracy and stability, allow the bath adequate stabilization time after reaching the set-point temperature.

원문: Fluke Calibration 7009/7108/7015 7108 설명서 · 제조사 원문 자료입니다. 사양은 제조사 사정에 따라 변경될 수 있습니다.

5.2 Comparison Calibration

Comparison calibration involves testing a probe (unit under test, UUT) against a reference probe. After inserting the probes to be calibrated into the bath, allow sufficient time for the probes to settle and the temperature of the bath to stabilize.

One of the significant dividends of using a bath rather than a dry-well to calibrate multiple probes is that the probes do not need to be identical in construction. The fluid in the bath allows different types of probes to be calibrated at the same time. However, stem effect from different types of probes is not totally eliminated. Even though all baths have horizontal and vertical gradients, these gradients are minimized inside the bath work area. Nevertheless, probes should be inserted to the same depth in the bath liquid. Be sure that all probes are inserted deep enough to prevent stem effect. From research at Hart Scientific, we suggest a general rule-of-thumb for immersion depth to reduce the stem effect to a minimum: 15 x the diameter of the UUT ＋the sensor length. Do not submerge the probe handles. If the probe handles get too warm during calibration at high temperatures, a heat shield could be used just below the probe handle. This heat shield could be as simple as aluminum foil slid over the probe before inserting it in the bath or as complicated as a specially designed reflective metal apparatus.

When calibrating over a wide temperature range, better results can generally be achieved by starting at the highest temperature and progressing down to the lowest temperature.

Probes can be held in place in the bath by using probe clamps or drilling holes in the access cover. Other fixtures to hold the probes can be designed. The object is to keep the reference probe and the probe(s) to be calibrated as closely grouped as possible in the working area of the bath. Bath stability is maximized when the bath working area is kept covered.

In preparing to use the bath for calibration start by:

- Placing the reference probe in the bath working area.
- Placing the probe to be calibrated, the UUT, in the bath working area as close as feasibly possible to the reference probe.

5.3 Calibration of Multiple Probes

Fully loading the bath with probes increases the time required for the temperature to stabilize after inserting the probes. Using the reference probe as the guide be sure that the temperature has stabilized before starting the calibration.

원문: Fluke Calibration 7009/7108/7015 7108 설명서 · 제조사 원문 자료입니다. 사양은 제조사 사정에 따라 변경될 수 있습니다.

Chapter 6
Parts and Controls

6.1 Front Control Panel

The following controls and indicators are present on the controller front panel (see Figure 1 below): (1) the digital LED display, (2) the control buttons, (3) the bath on/off power switch, and (4) the control indicator light.

(1) The digital display is an important part of the temperature controller because it not only displays set and actual temperatures but also displays various bath functions, settings, and constants. The display shows temperatures in values according to the selected scale units °C or °F.

(2) The control buttons (SET, DOWN, UP, and EXIT) are used to set the bath temperature set-point, and to access and set other operating parameters.

A brief description of the functions of the buttons follows:

SET – Used to display the next parameter in a menu and to set parameters to the displayed value.

DOWN – Used to decrement the displayed value of settable parameters.

UP – Used to increment the displayed value.

EXIT – Used to exit from a menu. When “EXIT” is pressed any changes made to the displayed value are ignored.

(3) The on/off switch controls power to the entire bath assembly. It powers the stirring motor and the bath controller/heater circuit.

(4) The control indicator is a two color light emitting diode. This indicator lets the user visually see the ratio of heating to cooling. When the indicator is red, the unit is heating. When the indicator is green the unit is cooling.

원문: Fluke Calibration 7009/7108/7015 7108 설명서 · 제조사 원문 자료입니다. 사양은 제조사 사정에 따라 변경될 수 있습니다.

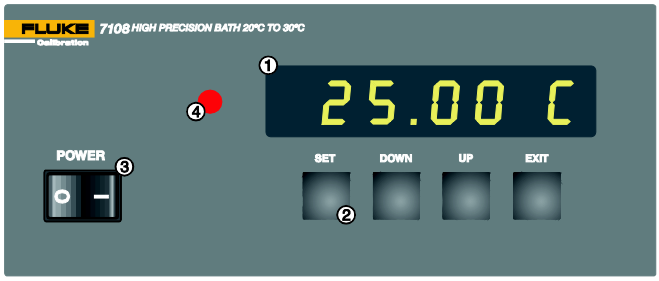

fig_1.eps

Figure 1. Front Panel

6.2 Back Panel

The back panel has seven standard features and one optional features (see Figure 2): 1) the probe connector, 2) the stirrer power outlet, 3) system fuses, 4) the power cord, 5) the drain valve, 6) serial number notation, 7) the RS-232 interface connector, and 8) the IEEE-488 interface connector (optional).

1. The probe connector on the back panel is used for the temperature controller probe.
2. The stirrer power is provided for the stirring motor (12 VDC).
3. The system fuses are 3 A for 115 VAC and 1.6 A for 230 VAC.
4. The power cord is rated at 115 VAC, 15 amps.
5. A drain valve is provided for ease of removing the fluid media from the bath. Always use a container of adequate size to hold the FULL LOAD of fluid. Some oils are more easily drained at higher temperatures. (See caution note in next section.)
6. The serial number is located on the bottom right side of the back panel. When calling Customer Service, use the serial number and model number.
7. A serial RS-232 interface cable attaches to the back of the bath at the connector labeled “RS-232”.
8. If the bath is supplied with a GPIB IEEE-488 interface, the interface cable attaches to the back of the bath at the connector labeled “IEEE-488”.

원문: Fluke Calibration 7009/7108/7015 7108 설명서 · 제조사 원문 자료입니다. 사양은 제조사 사정에 따라 변경될 수 있습니다.

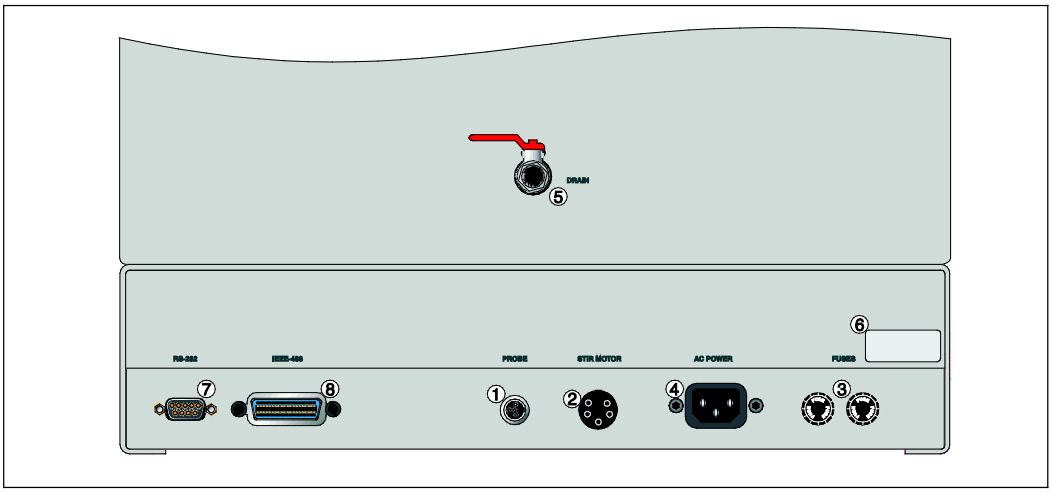

fig_2.eps

Figure 2. Back Panel

원문: Fluke Calibration 7009/7108/7015 7108 설명서 · 제조사 원문 자료입니다. 사양은 제조사 사정에 따라 변경될 수 있습니다.

6-4

원문: Fluke Calibration 7009/7108/7015 7108 설명서 · 제조사 원문 자료입니다. 사양은 제조사 사정에 따라 변경될 수 있습니다.

Chapter 7
General Operation

7.1 Switching to 230 V Operation

The 9303JW is switchable from 115 V AC to 230 V AC 50/60 Hz. Switching the voltage can change the calibration, so the **unit should be calibrated after changing the input voltage (see Section 10).**

To change from 115 VAC to 230 VAC:

- Unplug the instrument.
- Remove the two screws from each side and from the front panel (six total). Slide the front panel and electronic drawer out on foot. Next to the power PCB is a label showing the configuration of the two switches.
- Remove the fuse holder located on the back of the bath. Replace the two fuses (3 amp 250V) with 1.6 amp 250 V fuses.
- Slide the front panel and electronics drawer back in and secure with the sides and front with the screws.
- Place a label above the power cord indicating the voltage.

7.2 Bath Fluid

Many fluids will work with a 7108 bath. Choosing a fluid requires consideration of many important characteristics of the fluid. Among these are temperature range, viscosity, specific heat, thermal conductivity, thermal expansion, electrical resistivity, fluid lifetime, safety, and cost.

7.2.1 Temperature Range

One of the most important characteristics to consider is the temperature range of the fluid. Few fluids work well throughout the complete temperature range of the bath. The temperature at which the bath is operated must always be within the safe and useful temperature range of the fluid. The lower temperature range of the fluid is determined by the freeze point of the fluid or the temperature at which the viscosity becomes too great. The upper temperature is usually limited by vaporization, flammability, or chemical breakdown of the fluid. Vaporization of the fluid at higher temperatures may affect temperature stability because of cool condensed fluid dripping into the bath from the lid.

The bath temperature should be limited by setting the safety cut-out so that the bath temperature cannot exceed the safe operating temperature limit of the fluid.

원문: Fluke Calibration 7009/7108/7015 7108 설명서 · 제조사 원문 자료입니다. 사양은 제조사 사정에 따라 변경될 수 있습니다.

7.2.2 Viscosity

Viscosity is a measure of the thickness of a fluid, how easily it can be poured and mixed. Viscosity affects the temperature stability of the bath. With low viscosity, fluid mixing is better which creates a more uniform temperature throughout the bath. This improves the bath response time which allows it to maintain a more constant temperature. For good control the viscosity should be less than 10 centistokes. 50 centistokes is about the upper limit of allowable viscosity. Viscosities greater than this cause very poor control stability and may also overheat or damage the stirring motor. With oils viscosity may vary greatly with temperature.

When using fluids with higher viscosities the controller proportional band may need to be increased to compensate for the reduced response time. Otherwise the temperature may begin to oscillate.

7.2.3 Specific Heat

Specific heat is the measure of the heat storage ability of the fluid. Specific heat, though to a lesser degree, also affects the control stability and the heating and cooling rates. Generally, a lower specific heat causes slightly better control stability and quicker heating and cooling. With fluids with higher specific heat the controller may require a decreased proportional band to compensate for the decrease in sensitivity of the bath temperature to heat input.

7.2.4 Thermal Conductivity

Thermal conductivity measures how easily heat flows through the fluid. Thermal conductivity of the fluid affects the control stability, temperature uniformity, and probe temperature settling time. Fluids with higher conductivity distribute heat more quickly and evenly improving bath performance.

7.2.5 Thermal Expansion

Thermal expansion describes how the volume of the fluid changes with temperature. Thermal expansion of the fluid used must be considered since the increase in fluid volume as the bath temperature changes may cause overflow. Excessive thermal expansion may also be undesirable in applications where constant liquid level is important. Oils typically have significant thermal expansion.

7.2.6 Electrical Resistivity

Electrical resistivity describes how well the fluid insulates against the flow of electric current. In some applications, such as measuring the resistance of bare temperature sensors, it may be important that little or no electrical leakage occur through the fluid. In this case consider a fluid with very high resistivity.

7.2.7 Fluid Lifetime

Many fluids degrade over time because of vaporization, water absorption, gelling, or chemical breakdown. Often the degradation becomes significant near the upper temperature limit of the fluid.

원문: Fluke Calibration 7009/7108/7015 7108 설명서 · 제조사 원문 자료입니다. 사양은 제조사 사정에 따라 변경될 수 있습니다.

7.2.8 Safety

When choosing a fluid always consider the safety issues associated. Obviously, where there are extreme temperatures there can be danger to personnel and equipment. Fluids may also be hazardous for other reasons. Some fluids maybe considered toxic. Contact with eyes, skin, or inhalation of vapors may cause injury. A proper fume hood must be used if hazardous or bothersome vapors are produced.

⚠ WARNING:

Fluids at high temperatures. May pose danger from BURNS, FIRE, and TOXIC fumes. Use appropriate caution and safety equipment.

Fluids may be flammable and require special fire safety equipment and procedures. An important characteristic of the fluid to consider is the flash point. The flash point is the temperature at which there is sufficient vapor given off so that when there is sufficient oxygen present and an ignition source is applied the vapor will ignite. This does not necessarily mean that fire will be sustained at the flash point. The flash point may be either of the open cup or closed cup type. Either condition may occur in a bath situation. The closed cup temperature is always the lower of the two. The closed cup represents the contained vapors inside the tank and the open cup represents the vapors escaping the tank. Oxygen and an ignition source will be less available inside the tank.

Environmentally hazardous fluids require special disposal according to applicable federal or local laws after use.

7.2.9 Cost

Cost of bath fluids may vary greatly, from cents per gallon for water to hundreds of dollars per gallon for synthetic oils. Cost may be an important consideration when choosing a fluid.

7.2.10 Commonly Used Fluids

Below is a description of some of the more commonly used fluids and their characteristics

7.2.10.1 Water

Water is often used because of its very low cost, availability, and excellent temperature control characteristics. Water has very low viscosity and good thermal conductivity and heat capacity which makes it among the best fluids for control stability at low temperatures. Temperature stability is much poorer at higher temperatures because water condenses on the lid, cools and drips into the bath. Water is safe and relatively inert. The electrical conductivity of water may prevent its use in some applications. Water has a limited temperature range, from a few degrees above 0 °C to a few degrees below 100 °C. At higher temperatures evaporation becomes significant. Water used in the bath should be distilled or softened to prevent mineral deposits. Consider using an algicide chemical in the water to prevent contamination.

원문: Fluke Calibration 7009/7108/7015 7108 설명서 · 제조사 원문 자료입니다. 사양은 제조사 사정에 따라 변경될 수 있습니다.

7.2.10.2 Ethylene Glycol

The temperature range of water may be extended by using a solution of 1 part water and 1 part ethylene glycol (antifreeze). The characteristics of the ethylene glycol-water solution are similar to water. Use caution with ethylene glycol since the fluid is very toxic. Ethylene glycol must be disposed of properly.

7.2.10.3 Methanol

Methanol or methyl alcohol is often used at low temperatures below 0 °C.

Methanol is relatively inexpensive, has good control characteristics, and has a low freeze point. Methanol is very toxic so care must be taken when using and disposing of this fluid.

7.2.10.4 Mineral Oil

Mineral oil or paraffin oil is often used at moderate temperatures above the range of water. Mineral oil is relatively inexpensive. At lower temperatures mineral oil is quite viscous and control may be poor. At higher temperatures vapor emission becomes significant. The vapors may be dangerous and a fume hood should be used. As with most oils mineral oil will expand as temperature increases so be careful not to fill the bath too full that it overflows when heated. The viscosity and thermal characteristics of mineral oil is poorer than water so temperature stability will not be as good. Mineral oil has very low electrical conductivity. Use caution with mineral oil since it is flammable and may also cause serious injury if inhaled or ingested.

7.2.10.5 Silicone Oils

Silicone oils are available which offer a much wider operating temperature range than mineral oil. Like most oils, silicone oils have temperature control characteristics which are somewhat poorer than water. The viscosity changes significantly with temperature and thermal expansion also occurs. These oils have very high electrical resistivity. Silicon oils are fairly safe. These oils are relatively expensive.

7.2.11 Fluid Characteristics Charts

Table 3 and Figure 3 have been created to provide help in selecting a heat exchange fluid media for your constant temperature bath. The charts provide both a visual and numerical representation of most of the physical qualities important in making a selection. The list is not all inclusive; many usable fluids may not have been shown in this listing.

7.2.11.1 Limitations and Disclaimer

Every effort has gone into making these charts accurate; however, the data here does not imply any guarantee of fitness of use for a particular application. Working near the limits of a property such as the flash point or viscosity limit can compromise safety or serviceability. Sources of information sometimes vary for particular properties. Your company's safety policies as well as personal judgment regarding flash points, toxicity, etc. must also be considered. You are responsible for reading the Material Safety Data Sheets and making a judgment here. Cost may require some compromises as well. Hart Scientific cannot be liable for the suitability of application or for any personal injury, damage to equipment, product or facilities in using these fluids.

원문: Fluke Calibration 7009/7108/7015 7108 설명서 · 제조사 원문 자료입니다. 사양은 제조사 사정에 따라 변경될 수 있습니다.

The charts include information on a variety of fluids which are often used as heat transfer fluid in baths. Because of the temperature range some fluids may not be useful with your bath.

7.2.11.2 About the Graph

The fluid graph visually illustrates some of the important qualities of the fluids shown.

Temperature Range: The temperature scale is shown in degrees Celsius. A sense of the fluid's general range of application is indicated. Qualities including pour point, freeze point, important viscosity points, flash point, boiling point and others may be shown.

Freezing Point: The freezing point of a fluid is an obvious limitation to stirring. As the freezing point is approached high viscosity may also limit good stirring.

Pour Point: This represents a handling limit for the fluid.

Viscosity: Points shown are at 50 and 10 centistokes. Greater than 50 centistokes stirring is very poor and unsatisfactory for bath applications. At 10 centistokes and below optimum stirring can occur. These are rules of thumb which have been useful for most applications.

Fume Point: The point at which a fume hood should be used. This point is very subjective in nature and is impacted by individual tolerance to different fumes and smells, how well the bath is covered, the surface area of the fluid in the bath, the size and ventilation of the facility where the bath is located and others. We assume the bath is well covered at this point. This is also subject to company policy.

Flash Point: The point at which ignition may occur. See flash point discussion in Section7.2.8. The point shown may be either the open or closed cup flash point.

Boiling Point: At the boiling point of the fluid the temperature stability is difficult to maintain. Fuming is excessive. Excessive amounts of heater power may be required because of the heat of vaporization.

원문: Fluke Calibration 7009/7108/7015 7108 설명서 · 제조사 원문 자료입니다. 사양은 제조사 사정에 따라 변경될 수 있습니다.

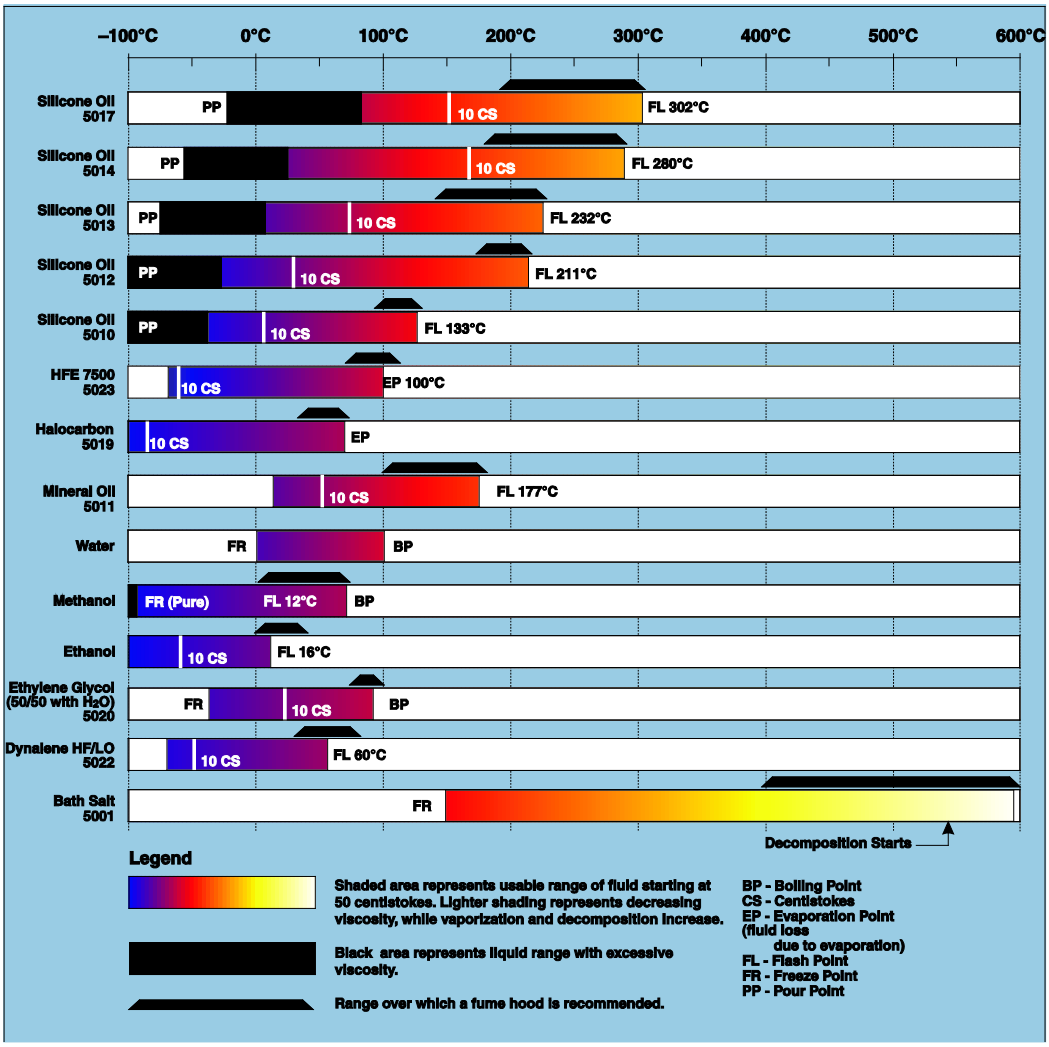

fig_3.eps

Figure 3. Chart of various bath fluids and their properties

Decomposition: All high temperature fluids may be reach a temperature point at which decomposition of some form will begin. While it always begins slowly at some lower temperature, the rate can increase to the point of danger or impracticality at a higher temperature.

원문: Fluke Calibration 7009/7108/7015 7108 설명서 · 제조사 원문 자료입니다. 사양은 제조사 사정에 따라 변경될 수 있습니다.

Fluid (# = Hart Model No.)	Lower Temperature Limit*	Upper Temperature Limit*	Flash Point	Viscosity (centistokes)	Specific Gravity	Specific Heat (cal/g/°C)	Thermal Conductivity (cal/s/cm/°C)	Thermal Expansion (cm/cm/°C)	Resistivity ($10^{12}\Omega$-cm)
Halocarbon 0.8 #5019	–90°C (v)**	70°C (e)	NONE	5.7 @ –50°C 0.8 @ 40°C 0.5 @ 70°C	1.71 @ 40°C	0.2	0.0004	0.0011	
Methanol	–96°C (fr)	60°C (b)	54°C	1.3 @ –35°C 0.66 @ 0°C 0.45 @ 20°C	0.810 @ 0°C 0.792 @ 20°C	0.6	0.0005 @ 20°C	0.0014 @ 25°C	
Water	0°C (fr)	95°C (b)	NONE	1 @ 25°C 0.4 @ 75°C	1.00	1.00	0.0014	0.0002 @ 25°C	
Ethylene Glycol—50% #5020	–35°C (fr)	110°C (b)	NONE	7 @ 0°C 2 @ 50°C 0.7 @ 100°C	1.05	0.8 @ 0°C	0.001		
Mineral Oil	40°C (v)	190°C (fl)	190°C	15 @ 75°C 5 @ 125°C	0.87 @ 25°C 0.84 @ 75°C 0.81 @ 125°C	0.48 @ 25°C 0.53 @ 75°C 0.57 @ 125°C	0.00025 @ 25°C	0.0007 @ 50°C	5 @ 25°C
Dow Corning 200.5 Silicone Oil	–40°C (v)**	133°C (fl, cc)	133°C	5 @ 25°C	0.92 @ 25°C	0.4	0.00028 @ 25°C	0.00105	1000 @ 25°C 10 @ 150°C
Dow Corning 200.10 #5012	–35°C (v)**	165°C (fl, cc)	165°C	10 @ 25°C 3 @ 135°C	0.934 @ 25°C	0.43 @ 40°C 0.45 @ 100°C 0.482 @ 200°C	0.00032 @ 25°C	0.00108	1000 @ 25°C 50 @ 150°C
Dow Corning 200.20 #5013	7°C (v)	230°C (fl, cc)	230°C	20 @ 25°C	0.949 @ 25°C	0.370 @ 40°C 0.393 @ 100°C 0.420 @ 200°C	0.00034 @ 25°C	0.00107	1000 @ 25°C 50 @ 150°C
Dow Corning 200.50 Silicone Oil	25°C (v)	280°C (fl, cc)	280°C	20 @ 25°C	0.96 @ 25°C	0.4	0.00037 @ 25°C	0.00104	1000 @ 25°C 50 @ 150°C
Dow Corning 550 #5016	70°C (v)	232°C (fl, cc) 300°C (fl, oc)	232°C	50 @ 70°C 10 @ 104°C	1.07 @ 25°C	0.358 @ 40°C 0.386 @ 100°C 0.433 @ 200°C	0.00035 @ 25°C	0.00075	100 @ 25°C 1 @ 150°C
Dow Corning 710 #5017	80°C (v)	302°C (fl, oc)	302°C	50 @ 80°C 7 @ 204°C	1.11 @ 25°C	0.363 @ 40°C 0.454 @ 100°C 0.505 @ 200°C	0.00035 @ 25°C	0.00077	100 @ 25°C 1 @ 150°C
Dow Corning 210-H Silicone Oil	66°C (v)	315°C (fl, oc)	315°C	50 @ 66°C 14 @ 204°C	0.96 @ 25°C	0.34 @ 100°C	0.0003	0.00095	100 @ 25°C 1 @ 150°C
Heat Transfer Salt #5001	145°C (fr)	530°C	NONE	34 @ 150°C 6.5 @ 300°C 2.4 @ 500°C	2.0 @ 150°C 1.9 @ 300°C 1.7 @ 500°C	0.33	0.0014	0.00041	1.7 Ω /cm^3

*Limiting Factors — b - boiling point e - high evaporation fl - flash point fr - freeze point v - viscosity — Flash point test oc = open cup cc = closed cup
**Very low water solubility, ice will form as a slush from condensation below freezing.

table_3.eps

Table 3. Table of various bath fluids and their properties

7.3 Stirring

Stirring of the bath fluid is very important for stable temperature control. The fluid must be mixed well for good temperature uniformity and fast controller response. The stirrer is precisely adjusted for optimum performance.

원문: Fluke Calibration 7009/7108/7015 7108 설명서 · 제조사 원문 자료입니다. 사양은 제조사 사정에 따라 변경될 수 있습니다.

7.4 Power

Power to the bath is provided by an AC mains supply of 115 VAC (±10 %), 60 Hz, 3 A [230 VAC (±10 %), 50 Hz, 1.6 A switchable]. Power to the bath passes through a filter to prevent switching spikes from being transmitted to other equipment.

To turn on the bath switch the control panel power switch to the ON position. The stir motor will turn on, the LED display will begin to show the bath temperature, and the heater will turn on or off until the bath temperature reaches the programmed set-point.

When powered on the control panel display briefly shows a four digit number. This number indicates the number of times power has been applied to the bath. Also briefly displayed is data which indicates the controller hardware configuration. This data is used in some circumstances for diagnostic purposes.

7.5 Heater/Cooling

The power to the bath is controlled by the temperature controller to maintain a constant bath temperature. The heating and cooling is controlled by thermal electric devices (TED).

7.6 Fluid Drain

The drain at the back of the bath (see Figure 2 on page 21) may be used to remove fluid from the bath. During operation of the bath the drain must be closed.

7.7 Temperature Controller

The bath temperature is controlled by Hart Scientific's unique hybrid digital/analog temperature controller. The controller offers the tight control stability of an analog temperature controller as well as the flexibility and programmability of a digital controller.

The bath temperature is monitored with a thermistor sensor in the control probe. The signal is electronically compared with the programmable reference signal, amplified, and then fed to a pulse-width modulator circuit which controls the amount of power applied to the bath TEDs.

The controller allows the operator to set the bath temperature with high resolution, adjust the proportional band, monitor the heater output power, and program the controller configuration and calibration parameters. The controller may be operated in temperature units of degrees Celsius or Fahrenheit. The controller is operated and programmed from the front control panel using the four key switches and digital LED display. The controller is equipped with a serial RS-232 or optionally with an IEEE-488 GPIB digital interface for remote operation. Operation of the controller using the front control panel is discussed in Section 8. Operation using the digital interfaces is discussed in Section 9.

When the controller is set to a new set-point the bath heats or cools to the new temperature. Once the new temperature is reached the bath usually takes 10-15 minutes for the temperature to settle and stabilize. There may be a small over-shoot or undershoot of about 0.5 °C.

원문: Fluke Calibration 7009/7108/7015 7108 설명서 · 제조사 원문 자료입니다. 사양은 제조사 사정에 따라 변경될 수 있습니다.

we measure, we calibrate, we validate.
㈜테솔 · www.tessol.com TS-TL-FLK-016 40 / 64
KOLAS 국제공인교정기관 · ISO/IEC 17025

TS-TL-FLK-016

Chapter 8
Controller Operation

This section discusses in detail how to operate the bath temperature controller using the front control panel. Using the front panel key switches and LED display the user may monitor the bath temperature, set the temperature set-point in degrees C or F, monitor the heater output power, adjust the controller proportional band, and program the probe parameters, and serial and IEEE-488 interface configuration. Operation is summarized in Figure 4.

8.1 Bath Temperature

The digital LED display on the front panel allows direct viewing of the actual bath temperature. This temperature value is what is normally shown on the display. The units, C or F, of the temperature value are displayed at the right. For example,

25.00 C	Bath temperature in degrees Celsius

The temperature display function may be accessed from any other function by pressing the “EXIT” button.

8.2 Temperature Set-point

The bath temperature can be set to any value within the range and with resolution as given in the specifications. The temperature range of the particular fluid used in the bath must be known by the operator and the bath should only be operated well below the upper temperature limit of the liquid. In addition, the cut-out temperature should also be set below the upper limit of the fluid.

Setting the bath temperature involves three steps: (1) select the set-point memory, (2) adjust the set-point value, and (3) adjust the vernier if desired.

8.2.1 Programmable Set-points

The controller stores 8 set-point temperatures in memory. The set-points can be quickly recalled to conveniently set the bath to a previously programmed temperature set-point.

원문: Fluke Calibration 7009/7108/7015 7108 설명서 · 제조사 원문 자료입니다. 사양은 제조사 사정에 따라 변경될 수 있습니다.

To set the bath temperature one must first select the set-point memory. This function is accessed from the temperature display function by pressing “SET”. The number of the set-point memory currently being used is shown at the left on the display followed by the current set-point value.

25.00 C	Bath temperature in degrees Celsius
SET	Access set-point memory

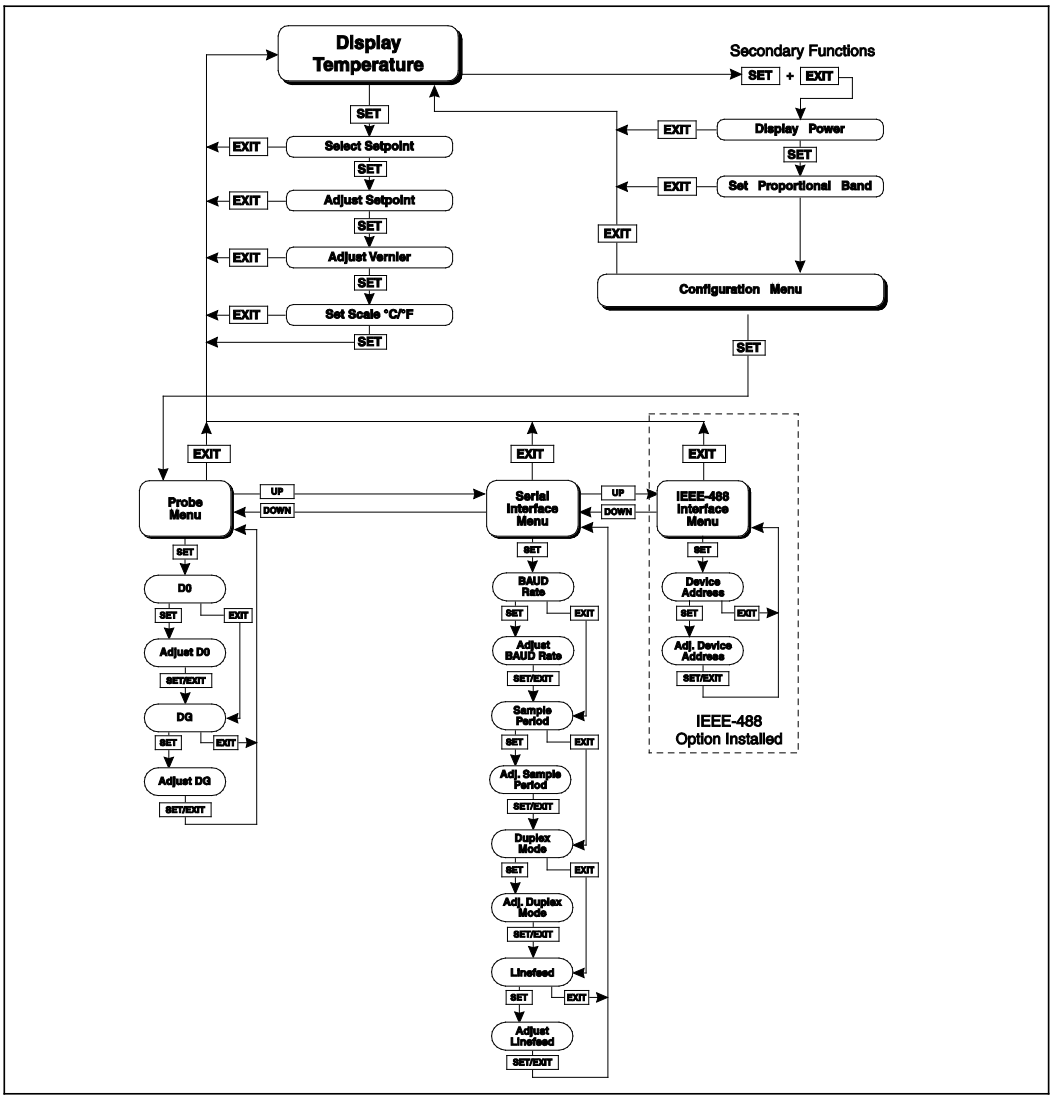

fig_4.eps

Figure 4. Controller Operation Flowchart

원문: Fluke Calibration 7009/7108/7015 7108 설명서 · 제조사 원문 자료입니다. 사양은 제조사 사정에 따라 변경될 수 있습니다.

1. 25.0	Set-point memory 1, 25.0 °C currently used

To change the set-point memory press “UP” or “DOWN”.

4. 27.0	New set-point memory 4, 27.0 °C

Press “SET” to accept the new selection and access the set-point value.

SET Accept selected set-point memory

8.2.2 Set-point Value

The set-point value may be adjusted after selecting the set-point memory and pressing “SET”. The set-point value is displayed with the units, C or F, at the left.

C 27.00	Set-point 4 value in °C

If the set-point value need not be changed then press “EXIT” to resume displaying the bath temperature. Press “UP” or “DOWN” to adjust the set-point value.

C 28.00	New set-point value

When the desired set-point value is reached press “SET” to accept the new value and access the set-point vernier. If “EXIT” is pressed instead then any changes made to the set-point will be ignored.

SET Accept new set-point value

8.2.3 Set-point Vernier

The set-point value can only be set with a resolution of 0.000032 °C. The user may want to adjust the set-point slightly to achieve a precise bath temperature. The set-point vernier allows one to adjust the temperature below or above the set-point by a small amount with very high resolution. Each of the 8 stored set-points has an associated vernier setting. The vernier is accessed from the set-point by pressing “SET”. The vernier setting is displayed as a 6 digit number with five digits after the decimal point. This is a temperature offset in degrees of the selected units, C or F.

원문: Fluke Calibration 7009/7108/7015 7108 설명서 · 제조사 원문 자료입니다. 사양은 제조사 사정에 따라 변경될 수 있습니다.

0.00000	Current vernier value in °C

To adjust the vernier press “UP” or “DOWN”. Unlike most functions the vernier setting has immediate effect as the vernier is adjusted. “SET” need not be pressed. This allows one to continually adjust the bath temperature with the vernier as it is displayed.

0.00090	New vernier setting

Next press “EXIT” to return to the temperature display or “SET” to access the temperature scale units selection.

SET — Access scale units

8.3 Temperature Scale Units

The temperature scale units of the controller may be set by the user to degrees Celsius (°C) or Fahrenheit (°F). These units are used in displaying the bath temperature, set-point, vernier, and proportional band.

The temperature scale units selection is accessed after the vernier adjustment function by pressing “SET”. From the temperature display function access the units selection by pressing “SET” 4 times.

25.00 C	Bath temperature

SET — Access set-point memory

1. 25.0	Set-point memory

SET — Access set-point value

C 25.00	Set-point value

SET — Access vernier

원문: Fluke Calibration 7009/7108/7015 7108 설명서 · 제조사 원문 자료입니다. 사양은 제조사 사정에 따라 변경될 수 있습니다.

0.00000	Vernier setting
SET	Access scale units selection
Un= C	Scale units currently selected

Press “UP” or “DOWN” to change the units.

Un= F	New units selected

Press “SET” to accept the new selection and resume displaying the bath temperature.

SET	Set the new units and resume temperature display

8.4 Secondary Menu

Functions which are used less often are accessed within the secondary menu. The secondary menu is accessed by pressing “SET” and “EXIT” simultaneously and then releasing. The first function in the secondary menu is the heater power display.

8.5 Thermal Electric Devices (TEDs)

The temperature controller controls the temperature of the bath by supplying a linear voltage to the TEDs. The total power being applied to the TED is determined by the duty cycle. This value may be estimated by watching the red/green control indicator light or read directly from the digital display. By knowing the amount of power to the bath the user can tell if the bath is heating up to the set-point, cooling down, or controlling at a constant temperature. Monitoring the percent heater power will let the user know how stable the bath temperature is. With good control stability the percent heating power should not fluctuate more than ±1 % within one minute.

The percent power display is accessed in the secondary menu. Press “SET” and “EXIT” simultaneously and release. The heater power will be displayed as a percentage of full power.

SET + EXIT	Access percent power in secondary menu
12 Pct	Power in percent

To exit out of the secondary menu press “EXIT”. To continue on to the proportional band setting function press “SET”.

원문: Fluke Calibration 7009/7108/7015 7108 설명서 · 제조사 원문 자료입니다. 사양은 제조사 사정에 따라 변경될 수 있습니다.

8.6 Proportional Band

In a proportional controller such as this the heater output power is proportional to the bath temperature over a limited range of temperatures around the set-point. This range of temperature is called the proportional band. At the bottom of the proportional band the heater output is 100 %. At the top of the proportional band the heater output is 0. Thus as the bath temperature rises the heater power is reduced, which consequently tends to lower the temperature back down. In this way the temperature is maintained at a fairly constant temperature.

The temperature stability of the bath depends on the width of the proportional band. See Figure 5. If the band is too wide the bath temperature will deviate excessively from the set-point due to varying external conditions. This is because the power output changes very little with temperature and the controller cannot respond very well to changing conditions or noise in the system. If the proportional band is too narrow the bath temperature may swing back and forth because the controller overreacts to temperature variations. For best control stability the proportional band must be set for the optimum width.

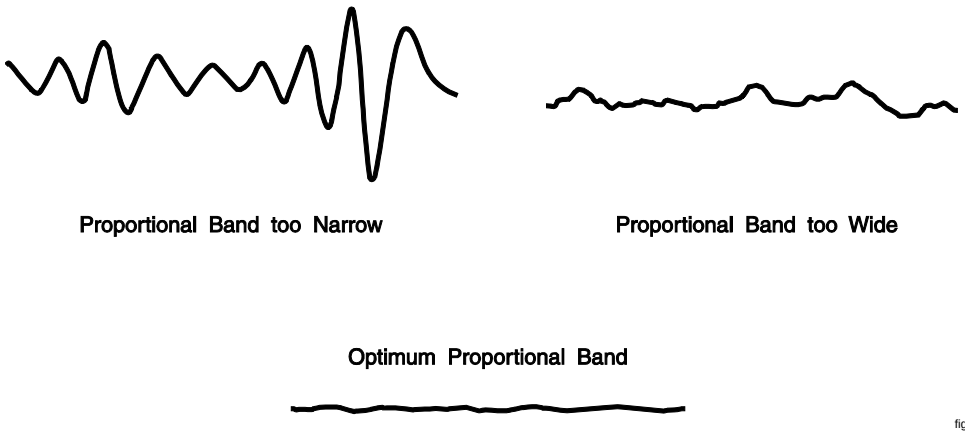

Figure 5. Bath temperature fluctuation at various proportional band settings

The optimum proportional band width depends on several factors among which are fluid volume, fluid characteristics (viscosity, specific heat, and thermal conductivity), heater power setting, operating temperature, and stirring. Thus the proportional band width may require adjustment for best bath stability when any of these conditions change. Of these, the most significant factors affecting the optimum proportional band width are heater power setting and fluid viscosity. The proportional band should be wider when the higher power setting is used so that the change in output power per change in temperature remains the same. The proportional band should also be wider when the fluid viscosity is higher because of the increased response time.

원문: Fluke Calibration 7009/7108/7015 7108 설명서 · 제조사 원문 자료입니다. 사양은 제조사 사정에 따라 변경될 수 있습니다.

The proportional band width is easily adjusted from the bath front panel. The width may be set to discrete values in degrees C or F depending on the selected units. The optimum proportional band width setting may be determined by monitoring the stability with a high resolution thermometer or with the controller percent output power display. Narrow the proportional band width to the point at which the bath temperature begins to oscillate and then increase the band width from this point to 3 or 4 times wider. Table 4 lists typical proportional band settings for optimum performance with a variety of fluids at selected temperatures.

Table 4. Proportional Band — Fluid Table

Fluid	Temperature	Heater Setting	Proportional Band	Stability
Water	25 °C	Low	0.04 °C	±0.002 °C
Mineral Oil	25 °C	Low	0.1 °C	±0.004 °C

The proportional band adjustment may be accessed within the secondary menu. Press “SET” and “EXIT” to enter the secondary menu and show the heater power. Then press “SET” to access the proportional band.

SET + EXIT Access heater power in secondary menu

12 Pct Heater power in percent

SET Access proportional band

Pb=0.101C Proportional band setting

To change the proportional band press “UP” or “DOWN”.

Pb=0.060C New proportional band setting

To accept the new setting and access the cut-out set-point press “SET”. Pressing “EXIT” will exit the secondary menu ignoring any changes just made to the proportional band value.

SET Accept the new proportional band setting

8.7 Controller Configuration

The controller has a number of configuration and operating options and calibration parameters which are programmable via the front panel. These are accessed from the secondary menu by pressing “SET.” The configuration menu consists of the probe parameters, serial interface parameters, and IEEE-488 interface parameters. The menus are selected using the “UP” and “DOWN” keys and then pressing “SET”.

원문: Fluke Calibration 7009/7108/7015 7108 설명서 · 제조사 원문 자료입니다. 사양은 제조사 사정에 따라 변경될 수 있습니다.

8.8 Probe Parameters

The probe parameter menu is indicated by,

PrObE	Probe parameters menu

Press “SET” to enter the menu. The probe parameters menu contains the parameters, D0 and Dg, which characterize the resistance-temperature relationship of the thermistor control probe. These parameters may be adjusted to improve the accuracy of the bath. This procedure is explained in detail in Section10.

The probe parameters are accessed by pressing “SET” after the name of the parameter is displayed. The value of the parameter may be changed using the “UP” and “DOWN” buttons. After the desired value is reached press “SET” to set the parameter to the new value. Pressing “EXIT” will cause the parameter to be skipped ignoring any changes that may have been made.

8.8.1 D0

This probe parameter refers to the resistance of the control probe at 0 °C. Normally this is set for –25.2290 ohms.

8.8.2 Dg

This probe parameter refers to the average sensitivity of the probe between 0 and 100 °C. Normally this is set for 186.9740

8.9 Serial Interface Parameters

The serial interface parameters menu is indicated by,

SErIAL	Serial RS-232 interface parameters menu

The serial interface parameters menu contains parameters which determine the operation of the serial interface. The parameters in the menu are — BAUD rate, sample period, duplex mode, and linefeed.

8.9.1 Baud Rate

The baud rate is the first parameter in the menu. The baud rate setting determines the serial communications transmission rate.

The baud rate parameter is indicated by,

BAUd	Serial baud rate parameter

Press “SET” to choose to set the baud rate. The current baud rate value will then be displayed.

1200 b	Current baud rate

원문: Fluke Calibration 7009/7108/7015 7108 설명서 · 제조사 원문 자료입니다. 사양은 제조사 사정에 따라 변경될 수 있습니다.

we measure, we calibrate, we validate.
㈜테솔 · www.tessol.com TS-TL-FLK-016 48 / 64
KOLAS 국제공인교정기관 · ISO/IEC 17025

TS-TL-FLK-016

The baud rate of the bath serial communications may be programmed to 300, 600, 1200, or 2400 baud. Use “UP” or “DOWN” to change the baud rate value.

2400 b	New baud rate

Press “SET” to set the baud rate to the new value or “EXIT” to abort the operation and skip to the next parameter in the menu.

8.9.2 Sample Period

The sample period is the next parameter in the serial interface parameter menu. The sample period is the time period in seconds between temperature measurements transmitted from the serial interface. If the sample rate is set to 5, the bath transmits the current measurement over the serial interface approximately every five seconds. The automatic sampling is disabled with a sample period of 0. The sample period is indicated by,

SAmPLE	Serial sample period parameter

Press “SET” to choose to set the sample period. The current sample period value will be displayed.

SA= 1	Current sample period (seconds)

Adjust the value with “UP” or “DOWN” and then use “SET” to set the sample rate to the displayed value.

SA= 60	New sample period

8.9.3 Duplex Mode

The next parameter is the duplex mode. The duplex mode may be set to full duplex or half duplex. With full duplex any commands received by the bath via the serial interface are immediately echoed or transmitted back to the device of origin. With half duplex the commands are executed but not echoed. The duplex mode parameter is indicated by,

dUPL	Serial duplex mode parameter

Press “SET” to access the mode setting.

dUP=FULL	Current duplex mode setting

The mode may be changed using “UP” or “DOWN” and pressing “SET”.

dUP=HALF	New duplex mode setting

원문: Fluke Calibration 7009/7108/7015 7108 설명서 · 제조사 원문 자료입니다. 사양은 제조사 사정에 따라 변경될 수 있습니다.

8.9.4 Linefeed

The final parameter in the serial interface menu is the linefeed mode. This parameter enables (on) or disables (off) transmission of a linefeed character (LF, ASCII 10) after transmission of any carriage-return. The linefeed parameter is indicated by,

LF	Serial linefeed parameter

Press “SET” to access the linefeed parameter.

LF= On	Current linefeed setting

The mode may be changed using “UP” or “DOWN” and pressing “SET”.

LF= OFF	New linefeed setting

8.10 IEEE-488 Parameters

Baths may optionally be fitted with an IEEE-488 GPIB interface. In this case the user may set the interface address within the IEEE-488 parameter menu. This menu does not appear on baths not fitted with the interface. The menu is indicated by,

IEEE	IEEE-488 parameters menu

Press “SET” to enter the menu.

8.10.1 IEEE-488 Address

The IEEE-488 interface must be configured to use the same address as the external communicating device. The address is indicated by,

AddrESS	IEEE-488 interface address

Press “SET” to access the address setting.

Add= 22	Current IEEE-488 interface address

Adjust the value with “UP” or “DOWN” and then use “SET” to set the address to the displayed value.

Add= 15	New IEEE-488 interface address

원문: Fluke Calibration 7009/7108/7015 7108 설명서 · 제조사 원문 자료입니다. 사양은 제조사 사정에 따라 변경될 수 있습니다.

Chapter 9
Digital Communication Interface

The 7108 bath is capable of communicating with and being controlled by other equipment through the digital interface. The instrument comes standard with an RS-232 serial interface or optionally with an IEEE-488 GPIB interface.

With a digital interface the bath may be connected to a computer or other equipment. This allows the user to set the bath temperature, monitor the temperature, and access any of the other controller functions, all using remote communications equipment.

9.1 Serial Communications

The bath is equipped with an RS-232 serial interface that allows serial digital communications over fairly long distances. With the serial interface the user may access any of the functions, parameters and settings discussed in Section8 with the exception of the BAUD rate setting. The serial interface uses 8 data bits, 1 stop bit, and no parity.

9.1.1 Wiring

The serial communications cable attaches to the bath through the DB-9 connector at the back of the instrument. Figure 6 shows the pin-out of this connector and suggested cable wiring. To eliminate noise, the serial cable should be shielded with low resistance between the connector (DB-9) and the shield.

9.1.2 Setup

Before operation the serial interface of the bath must first be set up by programming the BAUD rate and other configuration parameters. These parameters are programmed within the serial interface menu.

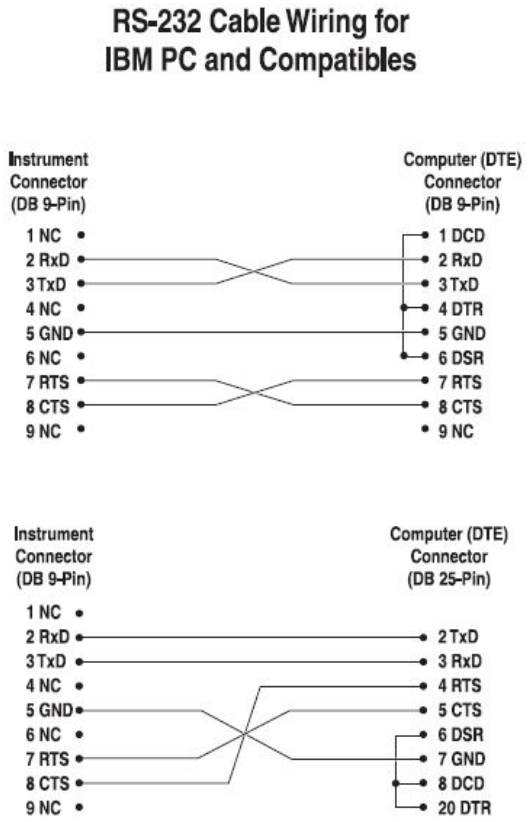

Figure 6. Serial Communications Cable Wiring

원문: Fluke Calibration 7009/7108/7015 7108 설명서 · 제조사 원문 자료입니다. 사양은 제조사 사정에 따라 변경될 수 있습니다.

To enter the serial parameter programming mode first press “EXIT” while pressing “SET” and release to enter the secondary menu.

Press “SET” repeatedly until the display reads “ProbE”. This is the menu selection. Press “UP” repeatedly until the serial interface menu is indicated with “SErIAL”. Finally press “SET” to enter the serial parameter menu. In the serial interface parameters menu are the BAUD rate, the sample rate, the duplex mode, and the linefeed parameter.

9.1.2.1 Baud rate

The baud rate is the first parameter in the menu. The display will prompt with the baud rate parameter by showing “BAUd”. Press “SET” to choose to set the baud rate. The current baud rate value will then be displayed. The baud rate of the 7108 serial communications may be programmed to 300, 600, 1200, or 2400 baud. The baud rate is pre-programmed to 1200 baud. Use “UP” or “DOWN “to change the baud rate value. Press “SET” to set the baud rate to the new value or “EXIT” to abort the operation and skip to the next parameter in the menu.

9.1.2.2 Sample Period

The sample period is the next parameter in the menu and prompted with “SAmPLE”. The sample period is the time period in seconds between temperature measurements transmitted from the serial interface. If the sample rate is set to 5, the 7108 transmits the current measurement over the serial interface approximately every five seconds. The automatic sampling is disabled with a sample period of 0. Press “SET” to choose to set the sample period. Adjust the period with “UP” or “DOWN” and then use “SET” to set the sample rate to the displayed value.

9.1.2.3 Duplex Mode

The next parameter is the duplex mode indicated with “dUPL”. The duplex mode may be set to half duplex (“HALF”) or full duplex (“FULL”). With full duplex any commands received by the thermometer via the serial interface are immediately echoed or transmitted back to the device of origin. With half duplex the commands are executed but not echoed. The default setting is full duplex. The mode may be changed using “UP” or “DOWN” and pressing “SET”.

9.1.2.4 Linefeed

The final parameter in the serial interface menu is the linefeed mode. This parameter enables (“On”) or disables (“OFF”) transmission of a linefeed character (LF, ASCII 10) after transmission of any carriage-return. The default setting is with linefeed on. The mode may be changed using “UP” or “DOWN” and pressing “SET”.

9.1.3 Serial Operation

Once the cable has been attached and the interface set up properly the controller immediately begins transmitting temperature readings at the programmed rate. The set-point and other commands may be sent to the bath via the serial interface to set the bath and view or program the various parameters. The interface commands are discussed in Section9.3. All commands are ASCII character strings terminated with a carriage-return character (CR, ASCII 13).

9.2 IEEE-488 Communication

The IEEE-488 interface is available as an option. Baths supplied with this option may be connected to a GPIB type communication bus which allows many instruments to be connected and controlled simultaneously. To eliminate noise,

원문: Fluke Calibration 7009/7108/7015 7108 설명서 · 제조사 원문 자료입니다. 사양은 제조사 사정에 따라 변경될 수 있습니다.

TS-TL-FLK-016

we measure, we calibrate, we validate. ㈜테솔 · www.tessol.com TS-TL-FLK-016 52 / 64
KOLAS 국제공인교정기관 · ISO/IEC 17025

the GPIB cable should be shielded.

9.2.1 Setup

To use the IEEE-488 interface first connect an IEEE-488 standard cable to the back of the bath. Next set the device address. This parameter is programmed within the IEEE-488 interface menu.

To enter the IEEE-488 parameter programming menu first press “EXIT” while pressing “SET” and release to enter the secondary menu. Press “SET” repeatedly until the display reaches “PrObE”. This is the menu selection. Press “UP” repeatedly until the IEEE-488 interface menu is indicated with “IEEE”. Press

“SET” to enter the IEEE-488 parameter menu. The IEEE-488 menu contains the IEEE-488 address parameter.

9.2.1.1 IEEE-488 Interface Address

The IEEE-488 address is prompted with “AddrESS”. Press “SET” to program the address. The default address is 22. Change the device address of the bath if necessary to match the address used by the communication equipment by pressing “UP” or “DOWN” and then “SET”.

9.2.2 IEEE-488 Operation

Commands may now be sent via the IEEE-488 interface to read or set the temperature or access other controller functions. All commands are ASCII character strings and are terminated with a carriage-return (CR, ASCII 13). Interface commands are listed below.

원문: Fluke Calibration 7009/7108/7015 7108 설명서 · 제조사 원문 자료입니다. 사양은 제조사 사정에 따라 변경될 수 있습니다.

9.3 Interface Commands

The various commands for accessing the bath controller functions via the digital interfaces are listed in this section (see Table 5). These commands are used with both the RS-232 serial interface and the IEEE-488 GPIB interface. In either case the commands are terminated with a carriage-return character. The interface makes no distinction between upper and lower case letters, hence either may be used. Commands may be abbreviated to the minimum number of letters which determines a unique command. A command may be used to either set a parameter or display a parameter depending on whether or not a value is sent with the command following a “ =” character. For example “s” <CR> will return the current set-point and “s =25.00” <CR> will set the set-point to 25.00 degrees.

In the following list of commands, characters or data within brackets, “[” and “]”, are optional for the command. A slash, “/”, denotes alternate characters or data. Numeric data, denoted by “n”, may be entered in decimal or exponential notation. Characters are shown in lower case although upper case may be used. Spaces may be added within command strings and will simply be ignored. Backspace (BS, ASCII 8) may be used to erase the previous character. A terminating CR is implied with all commands.

원문: Fluke Calibration 7009/7108/7015 7108 설명서 · 제조사 원문 자료입니다. 사양은 제조사 사정에 따라 변경될 수 있습니다.

Table 5. Interface Command Summary

Command Description	Command Format	Command Example	Returned	Returned Example	Acceptable Values
Display Temperature					
Read current set-point	s[etpoint]	s	set: 9999.99 {C or F}	set: 25.00 C	
Set current set-point to n	s[etpoint]=n	s=25			Instrument Range
Read vernier	v[ernier]	v	v: 9.99999	v: 0.00000	
Set vernier to n	v[ernier]=n	v=.00001			Depends on Configuration
Read temperature	t[emperature]	t	t: 9999.99 {C or F}	t: 26.00 C	
Read temperature units	u[nits]	u	u: x	u: c	
Set temperature units:	**u[nits]=c/f**				C or F
Set temperature units to Celsius	u[nits]=c	u=c			
Set temperature units to Fahrenheit	u[nits]=f	u=f			
Secondary Menu					
Read proportional band setting	pr[op-band]	pr	pr: 999.9	pr: 15.9	
Set proportional band to *n*	pr[op-band]=n	pr=8.830			Depends on Configuration
TED (duty cycle)	po[wer]	po	po: 999	po: 1	±100
Configuration Menu					
Probe Menu					
Read D0 calibration parameter	*d0	*d0	d0: 999.9999	d0: -25.2290	
Set D0 calibration parameter to *n*	*d0=n	*d0=-25.2290			-999.9999 to 999.9999
Read DG calibration parameter	*dg	*dg	dg: 999.9999	dg:186.9740	
Set DG calibration parameter to *n*	*dg=n	*dg=186.9740			-999.9999 to 999.9999
Serial Interface Menu					
Read serial sample setting	sa[mple]	sa	sa: 9	sa: 1	
Set serial sampling setting to *n* seconds	sa[mple]=n	sa=0			0 to 4000
Set serial duplex mode:	**du[plex]=f[ull]/h[alf]**				FULL or HALF
Set serial duplex mode to full	du[plex]=f[ull]	du=f			
Set serial duplex mode to half	du[plex]=h[alf]	du=h			
Set serial linefeed mode:	**lf[eed]=on/of[f]**				ON or OFF
Set serial linefeed mode to on	lf[eed]=on	lf=on			
Set serial linefeed mode to off	lf[eed]=of[f]	lf=of			

원문: Fluke Calibration 7009/7108/7015 7108 설명서 · 제조사 원문 자료입니다. 사양은 제조사 사정에 따라 변경될 수 있습니다.

Table 6. Interface Command Summary continued

Command Description	Command Format	Command Example	Returned	Returned Example	Acceptable Values
Miscellaneous (not on menus)					
Read firmware version number	*ver[sion]	*ver	ver.9999,9.99	ver.2100,3.56	
Read structure of all commands	h[elp]	h	list of commands		
Legend:	[] Optional Command data				
	{} Returns either information				
	n Numeric data supplied by user				
	9 Numeric data returned to user				
	x Character data returned to user				
Note:	When DUPLEX is set to FULL and a command is sent to READ, the command is returned followed by a carriage return and linefeed. Then the value is returned as indicated in the RETURNED column.				

원문: Fluke Calibration 7009/7108/7015 7108 설명서 · 제조사 원문 자료입니다. 사양은 제조사 사정에 따라 변경될 수 있습니다.

Chapter 10
Calibration Procedure

The user may want to calibrate the bath to improve the temperature set-point accuracy. Calibration is done by adjusting the probe calibration constant D0 so that the temperature of the bath as measured with a standard thermometer agrees more closely with the bath set-point. The thermometer and any associated display instrument must be able to measure the bath fluid temperature with higher accuracy than the accuracy you desire from the bath.

The first step in the calibration procedure is to set the bath to the set-point at which you want the best accuracy, 25 °C for example. Allow the bath to reach the set-point and stabilize for at least 30 minutes.

The next step is to measure the temperature error. Insert the reference thermometer into the bath and allow its temperature to stabilize. Note the error which is the actual measured temperature of the bath minus the set-point temperature. For example, if the bath is set for a set-point of 25 °C and the bath stabilizes at a temperature of 24.782 °C then the error is –0.218 °C.

Next, calculate a new value for the D0 parameter. To do this you need to find the present value of D0. You can find it in the Probe sub-menu in the Config section of the secondary menu (see Section 9.8). The default value for this parameter is –25.229. To calculate the new value for D0 add the measured error, in degrees C, to it. For example, if D0 is now –25.229 and the measured error was –0.218 °C the new value of D0 would be –25.447. Change the controller's value of D0 to the new value you calculated.

Finally, check the bath for accuracy. Set the set-point again by pressing ENTER three times and then pressing EXIT. The display should begin to read the temperature you measured and then the bath will heat or cool until the display reaches the set-point. At this point the actual temperature of the bath should closely match the set-point. Verify this by measuring the temperature again after the bath is stable.

원문: Fluke Calibration 7009/7108/7015 7108 설명서 · 제조사 원문 자료입니다. 사양은 제조사 사정에 따라 변경될 수 있습니다.

7108
Users Guide

10-2

원문: Fluke Calibration 7009/7108/7015 7108 설명서 · 제조사 원문 자료입니다. 사양은 제조사 사정에 따라 변경될 수 있습니다.

Chapter 11
Maintenance

- The calibration instrument has been designed with the utmost care. Ease of operation and simplicity of maintenance have been a central theme in the product development. Therefore, with proper care the instrument should require very little maintenance. Avoid operating the instrument in dirty or dusty environments.
- The bath should be cleaned regularly to prevent a buildup of oil or dust.
- Use a paint safe cleaning agent on all painted surfaces. Solvents such as
- Trichloroethylene or Acetone may dull or dissolve the paint. The stainless steel surfaces may be cleaned with solvents as necessary to remove oils.
- The stirring motor should be clean to allow proper cooling. Normally only the outside surfaces require any attention. If the inside of the motor has become heavily loaded with oily dust, blow it out with compressed air. Follow normal safety procedures when using pressurized gasses.
- Periodically check the fluid level in the bath to ensure that the level has not dropped. A drop in the fluid level affects the stability of the bath. Changes in fluid level are dependent upon several factors specific to the environment in which the equipment is used. A schedule cannot be out-lined to meet each environmental setting. Therefore, the first year the bath should be checked weekly with notes kept as to changes in bath fluid. After the first year, the user can set up a maintenance schedule based on the data specific to the application.
- Heat transfer medium lifetime is dependent upon the type of medium and the environment. The fluid should be checked at least every month for the first year and regularly thereafter. This fluid check provides a baseline for knowledge of bath operation with clean, usable fluid. Once some fluids have become compromised, the break down can occur rapidly. Particular attention should be paid to the viscosity of the fluid. A significant change in the viscosity can indicate that the fluid is contaminated, being used out- side of its temperature limits, contains ice particles, or is close to a chemical breakdown. Once data has been gathered, a specific maintenance schedule can be outline for the instrument. Refer to the General Operation section (Section7) for more information about the different types of fluids used in calibration baths.

원문: Fluke Calibration 7009/7108/7015 7108 설명서 · 제조사 원문 자료입니다. 사양은 제조사 사정에 따라 변경될 수 있습니다.

- If a hazardous material is spilt on or inside the equipment, the user is responsible for taking the appropriate decontamination steps as outlined by the national safety council with respect to the material. MSDS sheets applicable to all fluids used in the baths should be kept in close proximity to the instrument.
- If the mains supply cord becomes damaged, replace it with a cord with the appropriate gauge wire for the current of the bath. If there are any questions, call Hart Scientific Customer Service for more information.
- Before using any cleaning or decontamination method except those recommended by Hart, users should check with Hart Scientific Customer
- Service to be sure that the proposed method will not damage the equipment.
- If the instrument is used in a manner not in accordance with the equipment design, the operation of the bath may be impaired or safety hazards may arise.
- The constant temperature bath depends upon the certain qualities of the fluid medium in order to maintain a uniform and stable temperature environment. Some oils change their characteristics or become dirty after a period of use. Always remove any foreign materials from the bath.
- Silicone oils as well as others may evaporate off their lighter components over a period of time leaving the very viscous components remaining. In addition, some decomposition occurs which may impair the temperature stability of the bath. When this happens, the fluid is generally very dark to black and viscous. Vegetable oils polymerize (turn plastic like) after they have been used for a time at high temperatures making them very difficult to remove. When the oil has become unusable it should be changed. The instructions for removing the oil is as follows.

11.1 Draining the Bath

The drain is located on the back of the bath. See Figure 2 on page 21. Locate the drain plug on the end of the drain tube. This drain plug is to be fluid tight until the time of draining. The following information is helpful when draining the bath. Always use a container capable of holding the entire load of fluid. The use of an adequate size, heat proof fluid container is extremely important. Use safety equipment as appropriate.

For water and low viscosity fluids - drain at room temperature. Normal care must be taken for fluids that may have corrosive or damaging effects on the surrounding facility or equipment.

⚠ WARNING:

Extreme danger of BURNS and FIRE. Use safety equipment, use proper equipment and have fire safety equipment standing by.

원문: Fluke Calibration 7009/7108/7015 7108 설명서 · 제조사 원문 자료입니다. 사양은 제조사 사정에 따라 변경될 수 있습니다.

Chapter 12
Troubleshooting

If problems arise while operating the 7108, this section provides some suggestions that may help you solve the problem. A wiring diagram is also included.

12.1 Troubleshooting

Below are several situations that may arise followed by suggested actions to take for fixing the problem. Some of the situations require the instrument to be reset using the Master Reset Sequence. See Section 12.1.1 for the Master Reset Sequence.

Incorrect Temperature Reading

- Power the unit on and watch the display. If the first number displayed is less than “-0005-”, the unit has been re-initialized. The instrument proportional band, D0, and DG need to be re-programmed. These numbers can be found on the Report of Calibration that was shipped with the unit.

The display is off

- Check the fuses.
- Check that the power cord is plugged in and connected to the unit.

Red LED on display is blank

- Check that there is power to the unit.

If the display flashes any error code

- Initialize the system by performing the master reset sequence. If the unit repeats the error code, contact Hart Scientific Customer Support for a return authorization and for instructions on returning the unit.

The displayed process temperature is in error and the controller remains in the cooling or the heating state at any set-point value

- Possible causes may be either a faulty control probe or erroneous data in memory. The probe may be disconnected, burned out, or shorted. Check that the probe is connected properly. The probe may be checked with an ohmmeter to see if it is open or shorted.
- If the problem is not the probe, erroneous data in memory may be the cause. Re-initialize the memory using the Master Reset Sequence explained above. If the problem remains, the cause may be a defective electronic component. Contact Hart Scientific Customer Service for assistance.

원문: Fluke Calibration 7009/7108/7015 7108 설명서 · 제조사 원문 자료입니다. 사양은 제조사 사정에 따라 변경될 수 있습니다.

The controller controls or attempts to control at an inaccurate temperature

- The controller operates normally except when controlling at a specified set-point. At this set-point, the temperature does not agree with that measured by the user's reference thermometer to within the specified accuracy. This problem may be caused by an actual difference in temperature between the points where the control probe and thermometer probe measure temperature, by erroneous bath calibration parameters, or by a damaged control probe.
- Check that the bath has an adequate amount of fluid in the tank and that the stirrer is operating properly.
- Check that the thermometer probe and control probe are both fully inserted into the bath to minimize temperature gradient errors.
- Check that the calibration parameters are all correct according to the Report of Calibration. If not then reprogram the constants. The memory backup battery may be weak causing errors in data.
- Check that the control probe has not been struck, bent, or damaged. If the cause of the problem remains unknown, contact an Authorized Service Center for assistance.

The controller shows that the output power is steady but the process temperature is unstable

If the bath temperature does not achieve the expected degree of stability when measured using a thermometer, try adjusting the proportional band to a narrower width as discussed in Section 8.6.

The controller alternately heats for a while then cools

This oscillation is typically caused by the proportional band being too narrow. Increase the width of the proportional band until the temperature stabilizes as discussed in Section 8.6.

The controller erratically heats then cools, control is unstable

If both the bath temperature and output power do not vary periodically but in a very erratic manner, the problem may be excess noise in the system. Noise due to the control sensor should be less than 0.001 °C. However, if the probe has been damaged or has developed an intermittent short, erratic behavior may exist. Check for a damaged probe or poor connection between the probe and bath.

Intermittent shorts in the heater or controller electronic circuitry may also be a possible cause. Contact an Authorized Service Center for assistance.

12.1.1 Master Reset Sequence

Hold the "SET" and "EXIT" keys down at the same time while powering up the unit. The screen will display "-init-", the model number, and the version of the software. The instrument proportional band, D0, and DG need to be re-programmed. These numbers can be found on the Report of Calibration that was shipped with the unit.

원문: Fluke Calibration 7009/7108/7015 7108 설명서 · 제조사 원문 자료입니다. 사양은 제조사 사정에 따라 변경될 수 있습니다.

we measure, we calibrate, we validate.
㈜테솔 · www.tessol.com TS-TL-FLK-016 62 / 64
KOLAS 국제공인교정기관 · ISO/IEC 17025

TS-TL-FLK-016

12.2 CE Comments

12.2.1 EMC Directive

Hart Scientific's equipment has been tested to meet the European Electromagnetic Compatibility Directive (EMC Directive, 89/336/EEC). Selection of Light Industrial or Heavy Industrial compliance has been based on the intended use of the instrument. Units designed for use in a calibration laboratory have been tested to Light Industrial Standards. Units designed to be used in the "field" have been tested to both Light Industrial and Heavy Industrial Standards. The Declaration of Conformity for your instrument lists the specific standards to which the unit was tested.

12.2.2 Directive (Safety)

In order to, comply with the European Low Voltage Directive (73/23/EEC), Hart Scientific equipment has been designed to meet the IEC 1010-1 (EN 61010-1) and IEC 1010-2-010 (EN 61010-2-010) standards.

원문: Fluke Calibration 7009/7108/7015 7108 설명서 · 제조사 원문 자료입니다. 사양은 제조사 사정에 따라 변경될 수 있습니다.

12-4

원문: Fluke Calibration 7009/7108/7015 7108 설명서 · 제조사 원문 자료입니다. 사양은 제조사 사정에 따라 변경될 수 있습니다.