FLUKE Calibration

7312

Triple Point of Water Maintenance Bath

User's Guide

March 2013
© 2013 Fluke Corporation. All rights reserved. Specifications are subject to change without notice.
All product names are trademarks of their respective companies.

원문: Fluke Calibration 7312 설명서 · 제조사 원문 자료입니다. 사양은 제조사 사정에 따라 변경될 수 있습니다.

LIMITED WARRANTY AND LIMITATION OF LIABILITY

Each Fluke product is warranted to be free from defects in material and workmanship under normal use and service. The warranty period is one year and begins on the date of shipment. Parts, product repairs, and services are warranted for 90 days. This warranty extends only to the original buyer or end-user customer of a Fluke authorized reseller, and does not apply to fuses, disposable batteries, or to any product which, in Fluke's opinion, has been misused, altered, neglected, contaminated, or damaged by accident or abnormal conditions of operation or handling. Fluke warrants that software will operate substantially in accordance with its functional specifications for 90 days and that it has been properly recorded on non-defective media. Fluke does not warrant that software will be error free or operate without interruption.

Fluke authorized resellers shall extend this warranty on new and unused products to end-user customers only but have no authority to extend a greater or different warranty on behalf of Fluke. Warranty support is available only if product is purchased through a Fluke authorized sales outlet or Buyer has paid the applicable international price. Fluke reserves the right to invoice Buyer for importation costs of repair/replacement parts when product purchased in one country is submitted for repair in another country.

Fluke's warranty obligation is limited, at Fluke's option, to refund of the purchase price, free of charge repair, or replacement of a defective product which is returned to a Fluke authorized service center within the warranty period.

To obtain warranty service, contact your nearest Fluke authorized service center to obtain return authorization information, then send the product to that service center, with a description of the difficulty, postage and insurance prepaid (FOB Destination). Fluke assumes no risk for damage in transit. Following warranty repair, the product will be returned to Buyer, transportation prepaid (FOB Destination). If Fluke determines that failure was caused by neglect, misuse, contamination, alteration, accident, or abnormal condition of operation or handling, including overvoltage failures caused by use outside the product's specified rating, or normal wear and tear of mechanical components, Fluke will provide an estimate of repair costs and obtain authorization before commencing the work. Following repair, the product will be returned to the Buyer transportation prepaid and the Buyer will be billed for the repair and return transportation charges (FOB Shipping Point).

THIS WARRANTY IS BUYER'S SOLE AND EXCLUSIVE REMEDY AND IS IN LIEU OF ALL OTHER WARRANTIES, EXPRESS OR IMPLIED, INCLUDING BUT NOT LIMITED TO ANY IMPLIED WARRANTY OF MERCHANTABILITY OR FITNESS FOR A PARTICULAR PURPOSE. FLUKE SHALL NOT BE LIABLE FOR ANY SPECIAL, INDIRECT, INCIDENTAL, OR CONSEQUENTIAL DAMAGES OR LOSSES, INCLUDING LOSS OF DATA, ARISING FROM ANY CAUSE OR THEORY.

Since some countries or states do not allow limitation of the term of an implied warranty, or exclusion or limitation of incidental or consequential damages, the limitations and exclusions of this warranty may not apply to every buyer. If any provision of this Warranty is held invalid or unenforceable by a court or other decision-maker of competent jurisdiction, such holding will not affect the validity or enforceability of any other provision.

Fluke Corporation
P.O. Box 9090
Everett, WA 98206-9090
U.S.A.

Fluke Europe B.V.
P.O. Box 1186
5602 BD Eindhoven
The Netherlands

11/99

원문: Fluke Calibration 7312 설명서 · 제조사 원문 자료입니다. 사양은 제조사 사정에 따라 변경될 수 있습니다.

Table of Contents

1 Before You Start 1

1.1 Symbols Used 1

1.2 Safety Information 2

1.2.1 WARNINGS 2

1.2.2 CAUTIONS 4

1.3 Authorized Service Centers. 5

2 Introduction 9

3 Specifications and Environment Conditions 11

3.1 Specifications 11

3.2 Environmental Conditions. 11

4 Quick Start 13

4.1 Unpacking 13

4.2 Set Up 13

4.3 Power 14

4.4 Setting the Temperature 14

5 Installation 17

5.1 Bath Environment 17

5.2 “Dry-out” Period 17

5.3 Bath Preparation and Filling 17

5.3.1 Drain Valve Installation Instructions 17

5.3.2 Filling With Fluid 18

5.4 Power 19

6 Bath Use. 21

6.1 General 21

6.2 Triple Point of Water Cell Maintenance. 21

6.2.1 Bath Preparation 21

6.2.2 Setting the Bath Temperature 22

6.2.3 Adjusting the TPW Cell Rack 22

6.2.4 Fluid Level 22

6.2.5 Features of the Bath Access Cover 24

6.2.6 Maintenance of the TPW Cell 24

원문: Fluke Calibration 7312 설명서 · 제조사 원문 자료입니다. 사양은 제조사 사정에 따라 변경될 수 있습니다.

6.3 Comparison Calibration 27
6.4 Calibration of Multiple Probes 27

7 Parts and Controls 29
7.1 Front Panel 29
7.2 Bath Tank and Lid 30
7.3 Back Panel 30

8 General Operation 31
8.1 Heat Transfer Fluid 31
8.1.1 Temperature Range 31
8.1.2 Viscosity 31
8.1.3 Specific Heat 31
8.1.4 Thermal Conductivity 32
8.1.5 Thermal Expansion 32
8.1.6 Electrical Resistivity 33
8.1.7 Fluid Lifetime 33
8.1.8 Safety 33
8.1.9 Cost 34
8.1.10 Commonly Used Fluids 34
8.1.10.1 Water 34
8.1.10.2 Ethylene Glycol 34
8.1.10.3 Mineral Oil 34
8.1.10.4 Silicone Oil 34
8.1.11 Fluid Characteristics Charts 35
8.1.11.1 Limitations and Disclaimer 35
8.1.11.2 About the Graph 35
8.2 Stirring 37
8.3 Power 38
8.4 Heater 38
8.5 Temperature Controller 38
8.6 Refrigeration 39

9 Controller Operation 41
9.1 Bath Temperature 41
9.2 Reset Cutout 41
9.3 Temperature Set-point 43
9.3.1 Programmable Set-points 43
9.3.2 Set-point Value 44
9.3.3 Set-point Vernier 44
9.4 Temperature Scale Units 45
9.5 Secondary Menu 46
9.6 Heater Power 46
9.7 Proportional Band 46

원문: Fluke Calibration 7312 설명서 · 제조사 원문 자료입니다. 사양은 제조사 사정에 따라 변경될 수 있습니다.

9.8 Cutout 49
9.9 Controller Configuration 50
9.10 Probe Parameters 50
9.10.1 D0 50
9.10.2 DG. 50
9.11 Operating Parameters 50
9.11.1 Cutout Reset Mode 51
9.11.2 Triple Point of Water Cutout 51
9.12 Serial Interface Parameters 52
9.12.1 BAUD Rate 52
9.12.2 Sample Period. 53
9.12.3 Duplex Mode 53
9.12.4 Linefeed 53
9.13 IEEE-488 Parameters 54
9.13.1 IEEE-488 Address 54
9.13.2 Transmission Termination 54
9.14 Calibration Parameters 55
9.14.1 CTO 55
9.14.2 H and L 55

10 Digital Communication Interface 57
10.1 Serial Communications 57
10.1.1 Wiring 57
10.1.2 Setup 58
10.1.2.1 BAUD Rate 58
10.1.2.2 Sample Period. 59
10.1.2.3 Duplex Mode 59
10.1.2.4 Linefeed. 59
10.1.3 Serial Operation. 59
10.2 IEEE-488 Communication (optional) 59
10.2.1 Setup 60
10.2.1.1 IEEE-488 Address 60
10.2.1.2 Transmission Termination 60
10.2.2 IEEE-488 Operation 60
10.3 Interface Commands 60
10.4 Power Control Functions 63

11 Calibration Procedure 65
11.1 Calibration Points—2 Point Calibration. 65
11.2 Measuring the Set-point Error. 65
11.3 Computing DO and DG 65
11.4 Calibration Example. 66
11.5 Single Point Calibration 66
11.6 Measuring the Set-point Error. 67

원문: Fluke Calibration 7312 설명서 · 제조사 원문 자료입니다. 사양은 제조사 사정에 따라 변경될 수 있습니다.

11.7 Computing D0 68
11.8 Calibrating the Triple Point of Water Cutout 68

12 Charging Instructions 71
12.1 Leak Testing 71
12.2 Evacuation 71
12.3 Charging 71

13 Maintenance 73

14 Troubleshooting 75
14.1 Troubleshooting 75
14.2 Comments 78
14.2.1 EMC Directive 78
14.2.2 Low Voltage Directive (Safety) 78

원문: Fluke Calibration 7312 설명서 · 제조사 원문 자료입니다. 사양은 제조사 사정에 따라 변경될 수 있습니다.

Figures and Tables

Figure 1 Drain Valve Installation—IMPORTANT: Do Not Over Tighten. Follow the installation instructions above. 18
Figure 2 Details of the Access Cover and Cell Racks 23
Figure 3 Fluid Level 25
Figure 4 Location of Handles for NBS Design Cells 26
Figure 5 Front Controller Panel 29
Figure 6 Chart of Various Bath Fluids and Their Properties 37
Figure 7 Controller Operation Flowchart 42
Figure 8 Bath Temperature Fluctuation at Various Proportional Band Settings . . 47
Figure 9 Serial Communications Cable Wiring 58
Figure 10 Sample Calibration Computations 67

원문: Fluke Calibration 7312 설명서 · 제조사 원문 자료입니다. 사양은 제조사 사정에 따라 변경될 수 있습니다.

Tables

Table 1 International Electrical Symbols 1
Table 2 Table of Various Bath Fluids and Their Properties. 36
Table 3 Proportional Band - Fluid Table 48
Table 4 Interface Command Summary.. 61
Table 4 Interface Command Summary continued 62

원문: Fluke Calibration 7312 설명서 · 제조사 원문 자료입니다. 사양은 제조사 사정에 따라 변경될 수 있습니다.

1 Before You Start

1.1 Symbols Used

Table 1 lists the International Electrical Symbols. Some or all of these symbols may be used on the instrument or in this manual.

Table 1 *International Electrical Symbols*

Symbol	Description
	AC (Alternating Current)
	AC-DC
	Battery
	CE Complies with European Union Directives
	DC
	Double Insulated
	Electric Shock
	Fuse
	PE Ground
	Hot Surface (Burn Hazard)
	Read the User's Manual (Important Information)
	Off
	On

원문: Fluke Calibration 7312 설명서 · 제조사 원문 자료입니다. 사양은 제조사 사정에 따라 변경될 수 있습니다.

Symbol	Description
c US	Canadian Standards Association
CAT II	OVERVOLTAGE (Installation) CATEGORY II, Pollution Degree 2 per IEC1010-1 refers to the level of Impulse Withstand Voltage protection provided. Equipment of OVERVOLTAGE CATEGORY II is energy-consuming equipment to be supplied from the fixed installation. Examples include household, office, and laboratory appliances.
	C-TIC Australian EMC Mark
	The European Waste Electrical and Electronic Equipment (WEEE) Directive (2002/96/EC) mark.

1.2 Safety Information

Use this instrument only as specified in this manual. Otherwise, the protection provided by the instrument may be impaired.

The following definitions apply to the terms "Warning" and "Caution".

- "WARNING" identifies conditions and actions that may pose hazards to the user.
- "CAUTION" identifies conditions and actions that may damage the instrument being used.

1.2.1 ⚠ WARNINGS

To avoid possible electric shock or personal injury, follow these guidelines.

GENERAL

- **DO NOT** use the instrument for any application other than calibration work. The instrument was designed for temperature calibration. Any other use of the unit may cause unknown hazards to the user.
- **DO NOT** use the unit in environments other than those listed in the user's guide.
- **DO NOT** overfill the bath. Overflowing extremely cold or hot fluid may be harmful to the operator. See Section 5.3, Bath Preparation and Filling, for specific instructions.
- Follow all safety guidelines listed in the user's manual.
- Calibration Equipment should only be used by Trained Personnel.
- If this equipment is used in a manner not specified by the manufacturer, the protection provided by the equipment may be impaired.
- Before initial use, or after transport, or after storage in humid or semi-humid environments, or anytime the instrument has not been energized for more than 10 days, the instrument needs to be energized for a "dry-out"

원문: Fluke Calibration 7312 설명서 · 제조사 원문 자료입니다. 사양은 제조사 사정에 따라 변경될 수 있습니다.

period of 2 hours before it can be assumed to meet all of the safety requirements of the IEC 1010-1. If the product is wet or has been in a wet environment, take necessary measures to remove moisture prior to applying power such as storage in a low humidity temperature chamber operating at 50 degree centigrade for 4 hours or more.

- **DO NOT** operate high temperature baths (500°C) near flammable materials. Extreme temperatures could ignite the flammable material.
- Overhead clearance is required. Do not place the instrument under a cabinet or other structure. Always leave enough clearance to allow for safe and easy insertion and removal of probes.
- The instrument is intended for indoor use only.

BURN HAZARD

- Extremely cold temperatures may be present in this equipment. Freezer burns and frostbite may result if personnel fail to observe safety precautions.
- High temperatures may be present in this equipment. Fires and severe burns may result if personnel fail to observe safety precautions.

ELECTRICAL HAZARD

- These guidelines must be followed to ensure that the safety mechanisms in this instrument will operate properly. This instrument must be plugged into a 115 VAC, 60Hz (230 VAC, 50Hz optional), AC only electric outlet. The power cord of the instrument is equipped with a three-pronged grounding plug for your protection against electrical shock hazards. It must be plugged directly into a properly grounded three-prong receptacle. The receptacle must be installed in accordance with local codes and ordinances. Consult a qualified electrician. DO NOT use an extension cord or adapter plug.
- **DO** use a ground fault interrupt device. This unit contains a liquid. A ground fault device is advised in case liquid is present in the electrical system and could cause an electrical shock.
- Always replace the power cord with an approved cord of the correct rating and type. If you have questions, contact a Hart Scientific Authorized Service Center (see Section 1.3).
- High voltage is used in the operation of this equipment. Severe injury or death may result if personnel fail to observe the safety precautions. Before working inside the equipment, turn off the power and disconnect the power cord.

BATH FLUIDS

- Fluids used in this unit may produce noxious or toxic fumes under certain circumstances. Consult the fluid manufacturer's MSDS (Material Safety Data Sheet). Proper ventilation and safety precautions must be observed.

원문: Fluke Calibration 7312 설명서 · 제조사 원문 자료입니다. 사양은 제조사 사정에 따라 변경될 수 있습니다.

- The instrument is equipped with a soft cutout (user settable firmware) and a hard cutout (set at the factory). Check the flash point, boiling point, or other fluid characteristic applicable to the circumstances of the unit operation. Ensure that the soft cutout is adjusted to the fluid characteristics of the application. As a guideline, the soft cutout should be set 10°C to 15°C below the flash point of the bath fluid. See Section 8.1, Heat Transfer Fluid, for specific information on bath fluids and Section 9.8, Cutout.

1.2.2 ⚠ CAUTIONS

To avoid possible damage to the instrument, follow these guidelines.

- **THE DRAIN VALVE MUST BE INSTALLED ON THE BACK OF THE BATH BEFORE ATTEMPTING TO FILL THE TANK WITH FLUID.** See Section 5.3, page 17 for drain installation instructions.
- Always operate this instrument at room temperature between 41°F and 122°F (5°C to 50°C). Allow sufficient air circulation by leaving at least 6 inches (15 cm) of clearance around the instrument.
- **DO NOT** overfill the bath. Overflowing liquid may damage the electrical system. Be sure to allow for thermal expansion of the fluid as the bath temperature increases. See Section 5.3, Bath Preparation and Filling, for specific instructions.
- Read Section 7, Bath Use, before placing the unit into service.
- **DO NOT** change the values of the bath calibration constants from the factory set values. The correct setting of these parameters is important to the safety and proper operation of the unit.
- The refrigeration may be damaged or the lifetime shortened if the set-point temperature is set above 60°C for more than one hour with the refrigeration manually on. Ensure that the refrigeration is off when the unit is used above 60°C.
- The **Factory Reset Sequence** should be performed only by authorized personnel if no other action is successful in correcting a malfunction. You must have a copy of the most recent Report of Test to restore the test parameters.
- **DO NOT** operate this instrument in an excessively wet, oily, dusty, or dirty environment.
- The unit is a precision instrument. Although it has been designed for optimum durability and trouble free operation, it must be handled with care. Position the unit before the tank is filled with fluid. Use the handles provided to move the unit. Due to the weight of the compressor, it may require two people to safely move the bath. If two people are used, place one person in the front and one person in the back of the unit, carefully slide hands under the unit and lift in unison. The area containing the compressor will be heavier than the rest of the unit. **Do not move a unit filled with fluid.**

원문: Fluke Calibration 7312 설명서 · 제조사 원문 자료입니다. 사양은 제조사 사정에 따라 변경될 수 있습니다.

- Most probes have handle temperature limits. Be sure that the probe handle temperature limit is not exceeded in the air above the instrument.
- The instrument and any thermometer probes used with it are sensitive instruments that can be easily damaged. Always handle these devices with care. Do not allow them to be dropped, struck, stressed, or overheated.

COLD BATHS

- Refrigerated baths require that the condensing coil be cleaned periodically. Accumulation of dust and dirt on the condenser will result in premature failure of the compressor.
- This bath has been equipped with a brownout and over voltage protection device as a safety feature to protect the system components.
- **Mode of Operation:** This bath needs to be plugged into the line voltage for at least 2 minutes before operation. This is only necessary for the first time that the bath is energized or when it is moved from one location to another. Turning the bath ON or OFF does not trigger the delay.
- If a High/Low voltage condition exists for longer than 5 seconds, the bath de-energizes. An amber indicator on the back panel lights when this condition exists.
- Re-energization is automatic upon correction of the fault condition and after a delay cycle of about 2 minutes. If a fault condition exists upon application of power, the bath will not energize.
- Under and Over Voltage Protection at 115 VAC
  - Voltage Cutout: ±12.5% (101 - 129 VAC)
  - Voltage Cut In: ±7.5% (106 - 124 VAC)
- Under and Over Voltage Protection at 230 VAC
  - Voltage Cutout: ±12.5% (203 - 257 VAC)
  - Voltage Cut In: ±7.5% (213 - 247 VAC)

1.3 Authorized Service Centers

Please contact one of the following authorized Service Centers to coordinate service on your Hart product:

Fluke Corporation, Hart Scientific Division

799 E. Utah Valley Drive
American Fork, UT 84003-9775
USA

Phone: +1.801.763.1600
Telefax: +1.801.763.1010

원문: Fluke Calibration 7312 설명서 · 제조사 원문 자료입니다. 사양은 제조사 사정에 따라 변경될 수 있습니다.

E-mail: support@hartscientific.com

Fluke Nederland B.V.

Customer Support Services
Science Park Eindhoven 5108
5692 EC Son
NETHERLANDS

Phone: +31-402-675300
Telefax: +31-402-675321
E-mail: ServiceDesk@fluke.nl

Fluke Int'l Corporation

Service Center - Instrimpex
Room 2301 Sciteck Tower
22 Jianguomenwai Dajie
Chao Yang District
Beijing 100004, PRC
CHINA

Phone: +86-10-6-512-3436
Telefax: +86-10-6-512-3437
E-mail: xingye.han@fluke.com.cn

Fluke South East Asia Pte Ltd.

Fluke ASEAN Regional Office
Service Center
60 Alexandra Terrace #03-16
The Comtech (Lobby D)
118502
SINGAPORE

Phone: +65 6799-5588
Telefax: +65 6799-5588
E-mail: antng@singa.fluke.com

When contacting these Service Centers for support, please have the following information available:

- Model Number

원문: Fluke Calibration 7312 설명서 · 제조사 원문 자료입니다. 사양은 제조사 사정에 따라 변경될 수 있습니다.

- Serial Number
- Voltage
- Complete description of the problem

원문: Fluke Calibration 7312 설명서 · 제조사 원문 자료입니다. 사양은 제조사 사정에 따라 변경될 수 있습니다.

2 Introduction

The Hart Scientific Model 7312 is a floor standing constant temperature bath. This bath is useful in maintaining up to two triple point of water cells, performing temperature calibration, and other applications requiring stable temperatures. An innovative state of the art solid-state temperature controller has been incorporated which maintains the bath temperature with extreme stability. The temperature controller uses a micro controller to execute the many operating functions.

User interface is provided by the 8-digit LED display and four key-switches. Digital remote communications is standard with an RS-232 serial interface and optional with an IEEE-488 interface.

Temperature cutouts protect triple point of water cells from freezing or high temperatures due to system failure. Separate circuits cut off heating or refrigeration independent of the temperature controller.

This bath was designed to be compact and low cost without compromising performance. The bath operates over a wide temperature range from –5°C to 110°C. The refrigeration permits sub-ambient temperature control.

원문: Fluke Calibration 7312 설명서 · 제조사 원문 자료입니다. 사양은 제조사 사정에 따라 변경될 수 있습니다.

3 Specifications and Environment Conditions

3.1 Specifications

Range	–5°C to 110°C
Stability	±0.001°C at 0°C (alcohol-water mix) ±0.004°C at 30°C (alcohol-water mix)
Uniformity	±0.003°C at 0°C (alcohol-water mix) ±0.006°C at 30°C (alcohol-water mix)
TPW Duration	Six weeks, typical (assumes correctly formed ice mantle)
Set-Point Accuracy	±0.05°C at 0°C
Set-Point Repeatability	±0.01°C
Display Resolution	±0.01°C
Set-Point Resolution	±0.002°C; 0.00003°C in high-resolution mode
Access Opening	4.75” x 3.8” (121 x 97 mm)
Immersion Depth	19.5” (496 mm)
Volume	5 gallons (19 liters)
Power	115 VAC (±10%), 60 Hz or 230 VAC (±10%), 50 Hz
Size	12” W x 24.5” W x 32.25” H (305 x 622 x 819 mm)
Weight	75 lb. (34 kg)
Automation Package	Interface-*it* software and an RS-232 computer interface are available for setting the bath temperature via an external computer. For IEEE-488, add 2001-IEEE to the automation package.
Safety	OVERVOLTAGE (Installation) CATEGORY II, Pollution Degree 2 per IEC1010-1

3.2 Environmental Conditions

Although the instrument has been designed for optimum durability and trouble-free operation, it must be handled with care. The instrument should not be operated in an excessively dusty or dirty environment. Maintenance and cleaning recommendations can be found in the Maintenance section of this manual.

The instrument operates safely under the following conditions:

- temperature range: 5-35°C (41-95°F)
- ambient relative humidity: maximum 80% for temperature <31°C, decreasing linearly to 50% at 40°C
- pressure: 75kPa – 106kPa

원문: Fluke Calibration 7312 설명서 · 제조사 원문 자료입니다. 사양은 제조사 사정에 따라 변경될 수 있습니다.

- mains voltage within ±10% of nominal
- vibrations in the calibration environment should be minimized
- altitudes less than 2,000 meters

원문: Fluke Calibration 7312 설명서 · 제조사 원문 자료입니다. 사양은 제조사 사정에 따라 변경될 수 있습니다.

4 Quick Start

CAUTION: *Read Section 6 entitled BATH USE before placing the bath in service.*

This chapter gives a brief summary of the steps required to set up and operate the bath. This should be used as a general overview and reference and not as a substitute for the remainder of the manual. Please read Section 6, Installation, through Section 9, General Operation, carefully before operating the bath.

4.1 Unpacking

Unpack the bath carefully and inspect it for any damage that may have occurred during shipment. If there is shipping damage, notify the carrier immediately. Verify that all components are present:

- 7312 Bath
- Access Hole Cover and Components.
- Triple Point of Water Support Racks and Adapters.
- User's Guide
- Report of Test
- Drain Valve

If you are missing any item, please call an Authorized Service Center for assistance.

4.2 Set Up

CAUTION: *The drain valve must be installed on the back of the bath before attempting to fill the tank with fluid. See Section 5.3, on page 17 for drain installation instructions.*

WARNING: *The instrument is equipped with a soft cutout (user settable firmware) and a hard cutout (set at the factory). Check the flash point, boiling point, or other fluid characteristic applicable to the circumstances of the unit operation. Ensure that the soft cutout is adjusted to the fluid characteristics of the application. As a guideline, the soft cutout should be set 10°C to 15°C below the flash point of the bath fluid. See Section 8.1, Heat Transfer Fluid, for specific information on bath fluids and Section 9.8, Cutout.*

Set up of the bath requires careful unpacking and placement of the bath, filling the bath with fluid, and connecting power. Consult Section 6, Installation, for

원문: Fluke Calibration 7312 설명서 · 제조사 원문 자료입니다. 사양은 제조사 사정에 따라 변경될 수 있습니다.

detailed instructions for proper installation of the bath. Be sure to place the bath in a safe, clean and level location.

Fill the bath tank with an appropriate liquid. For operation at moderate bath temperatures, clean distilled water works well above 0°C and below 70°C. Carefully pour the fluid into the bath tank through the large rectangular access hole above the tank avoiding spilling any fluid. The fluid must not exceed a height of 12.7-20.3 mm (0.5-0.8 inches) below the bottom of the lid (**NOT** the access cover).

4.3 Power

Plug the bath power cord into a mains outlet of the proper voltage, frequency and current capability. Refer to Section 3.1, Specifications, for power details. Refer to and read the caution at the front of the manual concerning brownout and over voltage protection. Check the back panel label for the correct voltage and frequency prior to energizing the unit. Turn the bath on using the front panel "POWER" switch. The baths turns on and begins to heat or cool to reach the previously programmed temperature set-point. The front panel LED display indicates the actual bath temperature. Set the cooling switch to "OFF" for temperature above approximately 45°C. Set the switch to "ON" for lower temperatures.

4.4 Setting the Temperature

In the following discussion and throughout this manual a solid box around the word SET, UP, DOWN, or EXIT. Indicates the panel button to press while the dotted box indicates the display reading on the front panel. Explanation of the button function or display reading is written at the right.

To view or set the bath temperature set-point proceed as follows. The front panel LED display normally shows the actual bath temperature.

24.68 C *Bath temperature display*

When the "SET" button is pressed the display shows the set-point memory that is currently being used and its value. Eight set-point memories are available.

SET *Access set-point selection.*

Set-point 1, 25.0°C currently used

Press the "SET" button to select this memory and access the set-point value.

SET *Access set-point value*

C 25.00 *Current value of set-point 1, 25.00°C*

Press the "UP" or "DOWN" button to change the set-point value.

원문: Fluke Calibration 7312 설명서 · 제조사 원문 자료입니다. 사양은 제조사 사정에 따라 변경될 수 있습니다.

UP *Increment display*

C 30.00 *New set-point value*

Press the “SET” button to accept the new value and to display the vernier value. The bath begins heating or cooling to the new set-point.

SET *Store new set-point, access vernier*

0.00000 *Current vernier value*

Press the “EXIT” button and the bath temperature is displayed again.

EXIT *Return to the temperature display*

24.73 C *Bath temperature display*

The bath heats or cools until it reaches the new set-point temperature. Turn off the cooling to reach and control at higher temperatures.

When setting the set-point temperature be careful not to exceed the temperature limit of the bath fluid. The over-temperature cutout should be correctly set for added safety. See Section 9.8, Cutout.

To obtain optimum control stability adjust the proportional band as discussed in Section 9.7, Proportional Band.

원문: Fluke Calibration 7312 설명서 · 제조사 원문 자료입니다. 사양은 제조사 사정에 따라 변경될 수 있습니다.

5 Installation

CAUTION: *Read Section 6 entitled BATH USE before placing the bath into service.*

5.1 Bath Environment

The Model 7312 Bath is a precision instrument, which should be located in an appropriate environment. The location should be free of drafts, extreme temperatures and temperature changes, dirt, etc. The surface where the bath is placed must be level. Allow plenty of space around the bath for air circulation.

The top surface of the bath may become hot at high temperatures. Beware of the danger of accidental fluid spills.

A fume hood should be used to remove any vapors given off by hot bath fluid.

5.2 "Dry-out" Period

Before initial use, after transport, and any time the instrument has not been energized for more than 10 days, the bath needs to be energized for a "dry-out" period of 1-2 hours before it can be assumed to meet all of the safety requirements of the IEC 1010-1.

5.3 Bath Preparation and Filling

CAUTION: *Before filling the tank with fluid the drain valve must be installed onto the pipe fitting at the back of the bath.*

5.3.1 Drain Valve Installation Instructions

The drain valve attaches to the swage fitting located on the lower backside of the bath. (See Figure 1.)

1. Place the valve onto the drain fitting and hand tighten in place by turning the hex nut (attached to the bath) counter clockwise while holding the valve stationary.
2. Using open-end wrenches, hold the valve in place and tighten the hex nub one quarter turn from the hand tightened position above.

The valve should be secured in place at this point. If not, repeat step number 2 being careful not to over tighten the assembly.

원문: Fluke Calibration 7312 설명서 · 제조사 원문 자료입니다. 사양은 제조사 사정에 따라 변경될 수 있습니다.

Ensure the valve handle is in the closed position before attempting to add fluid to the tank.

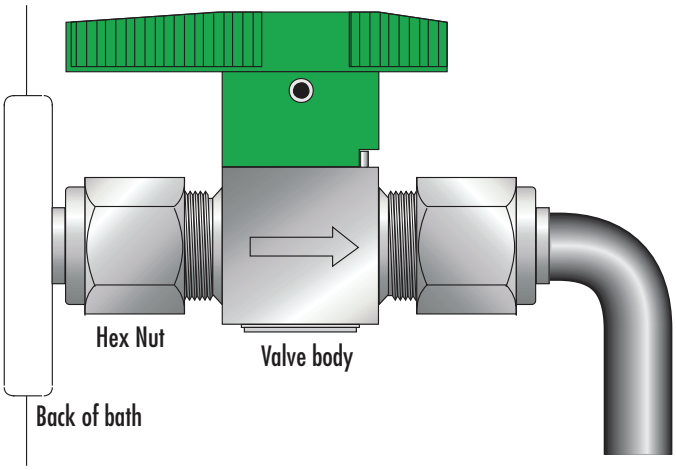

Figure 1 *Drain Valve Installation—IMPORTANT: Do Not Over Tighten. Follow the installation instructions above.*

5.3.2 Filling With Fluid

The Model 7312 Bath is not provided with a fluid. Various fluids are available from Hart Scientific and other sources. Depending on the desired temperature range, any of the following fluids, as well as others, may be used in the bath:

- Water
- Ethylene glycol/water
- Mineral oil
- Silicone oil

Fluids are discussed in detail in Section 9.1, Heat Transfer Fluid.

Remove any access hole cover from the bath and check the tank for foreign matter (dirt, remnant packing materials, etc.).

Fill the bath with clean unpolluted fluid. Fill the bath carefully through the large rectangular access hole to a level that allows for stirring and thermal expansion. Section 9.1.5, Thermal Expansion, explains fluid expansion. DO NOT turn on the bath without fluid in the tank. Maximum and minimum fill levels are dependent on the application whether it is used for TPW cells or comparison calibration. Carefully monitor the bath fluid level as the bath temperature rises to prevent overflow or splashing. Remove excess hot fluid if necessary with caution.

원문: Fluke Calibration 7312 설명서 · 제조사 원문 자료입니다. 사양은 제조사 사정에 따라 변경될 수 있습니다.

5.4 Power

With the bath power switch off, plug the bath into an AC mains outlet of the appropriate voltage, frequency, and current capacity. Refer to Section 3.1, Specifications, for power details. Refer to and read the caution at the front of the manual concerning brownout and over voltage protection. Check the back panel label for the correct voltage and frequency prior to energizing the unit.

원문: Fluke Calibration 7312 설명서 · 제조사 원문 자료입니다. 사양은 제조사 사정에 따라 변경될 수 있습니다.

6 Bath Use

CAUTION: *Read this section entitled BATH USE before placing the bath in service.*

The information in this section is for general information only. It is not designed to be the basis for calibration laboratory procedures. Each laboratory needs to write their specific procedures. Some of the information in this text may not apply to the specific bath you have purchased.

6.1 General

Be sure to select the correct fluid for the temperature range of the calibration. Bath fluids should be selected to operate safely with adequate thermal properties to meet the application requirements. Also, be aware that fluids expand when heated and could overflow the bath if not watched. Refer to General Operation, Section 9, for information specific to fluid selection and to the MSDS sheet specific to the fluid selected. Generally, baths are set to one temperature and used to calibrate probes only at that single temperature. This means that the type of bath fluid does not have to change. Additionally, the bath can be left energized reducing the stress on the system.

The bath generates extreme temperatures. Precautions must be taken to prevent personal injury or damage to objects. Probes may be extremely hot or cold when removed from the bath. Cautiously handle probes to prevent personal injury. Carefully place probes on a heat/cold resistant surface or rack until they are at room temperature. It is advisable to wipe the probe with a clean soft cloth or paper towel before inserting it into another bath. This prevents the mixing of fluids from one bath to another. If the probe has been calibrated in liquid salt, carefully wash the probe in warm water and dry completely before transferring it to another fluid. Always be sure that the probe is completely dry before inserting it into a hot fluid. Some of the high temperature fluids react violently to water or other liquid mediums. Be aware that cleaning the probe can be dangerous if the probe has not cooled to room temperature. Additionally, high temperature fluids may ignite the paper towels if the probe has not been cooled.

For optimum accuracy and stability, allow the bath adequate stabilization time after reaching the set-point temperature.

6.2 Triple Point of Water Cell Maintenance

6.2.1 Bath Preparation

The bath fluid to maintain the TPW cell must be able to operate near 0°C without freezing. Water alone can freeze. Water with about 10% ethanol is a good fluid for this application. It retains most of the excellent temperature control properties of water while reducing the freezing point to a useable level. The

원문: Fluke Calibration 7312 설명서 · 제조사 원문 자료입니다. 사양은 제조사 사정에 따라 변경될 수 있습니다.

mixture is also inexpensive and not flammable. Pure denatured ethanol or other alcohols may be used directly but they can pose a fire hazard. Ethylene glycol is not recommended because it leaves a sticky residue requiring cleaning of the thermometers immersed into it.

Be sure the over-temperature and the water triple point cutouts are properly set. See Sections 10.8 and 10.11.2.

6.2.2 Setting the Bath Temperature

The actual bath temperature must be from 0.007 to 0.008°C. Use an accurate thermometer capable of reading to three decimal places to set the temperature. While the bath may be calibrated to an extent (see Section 12), the set-point accuracy by itself is not sufficient. Check the reference thermometer against the TPW to assure accuracy of the temperature setting. The resolution of the digital temperature setting is to 0.002 °C. The set-point vernier feature of the temperature controller (see Section 10.3.3) is helpful here. The temperature of the bath needs to be checked occasionally over the first hour to ensure that control at the required temperature is established. Check the bath temperature occasionally over a few weeks to verify that it has not drifted as well.

The condition of the ice mantle must be monitored regularly. If the mantle seems to be growing, increase the temperature. Likewise, if the ice mantle seems to be melting back, lower the temperature.

6.2.3 Adjusting the TPW Cell Rack

The 7312 bath is provided with two adjustable racks that provide stable location for the cells. See Figure 2. Remove the racks by reaching in and withdrawing them. The stainless steel baffles on the left and right sides of the tank act as guides or tracks to locate and retain each rack. A TPW rack consists of support rods, a bottom plate and a top plate. The support plates are positioned on the support rods with set screws. Each plate is individually adjusted in order to adjust cell depth and to adjust cell fit. Start by adjusting the bottom plates until the cell is at the proper height. Rubber grommets protect the cell surfaces from direct contact with the metal. The top plate is sufficiently large for the Hart Scientific Model 5901 cell. Adapters are provided for each rack to fit the Hart TPW cells and most other commercially available cells. Other adapters are available upon request.

6.2.4 Fluid Level

The bath fluid level may be adjusted as desired for the cells. Typically the fluid level for the Hart Scientific Model 5901 cell is below the funnel but above the top end bell of the cell. The Hart Scientific Model 5901A cell fluid level may be just under or just over the opening. Use the adjustability of the racks to compensate for different cell designs. See the Figure 3. The handles of the NBS style cells (Hart Model 5901A) are as shown in Figure 4.

원문: Fluke Calibration 7312 설명서 · 제조사 원문 자료입니다. 사양은 제조사 사정에 따라 변경될 수 있습니다.

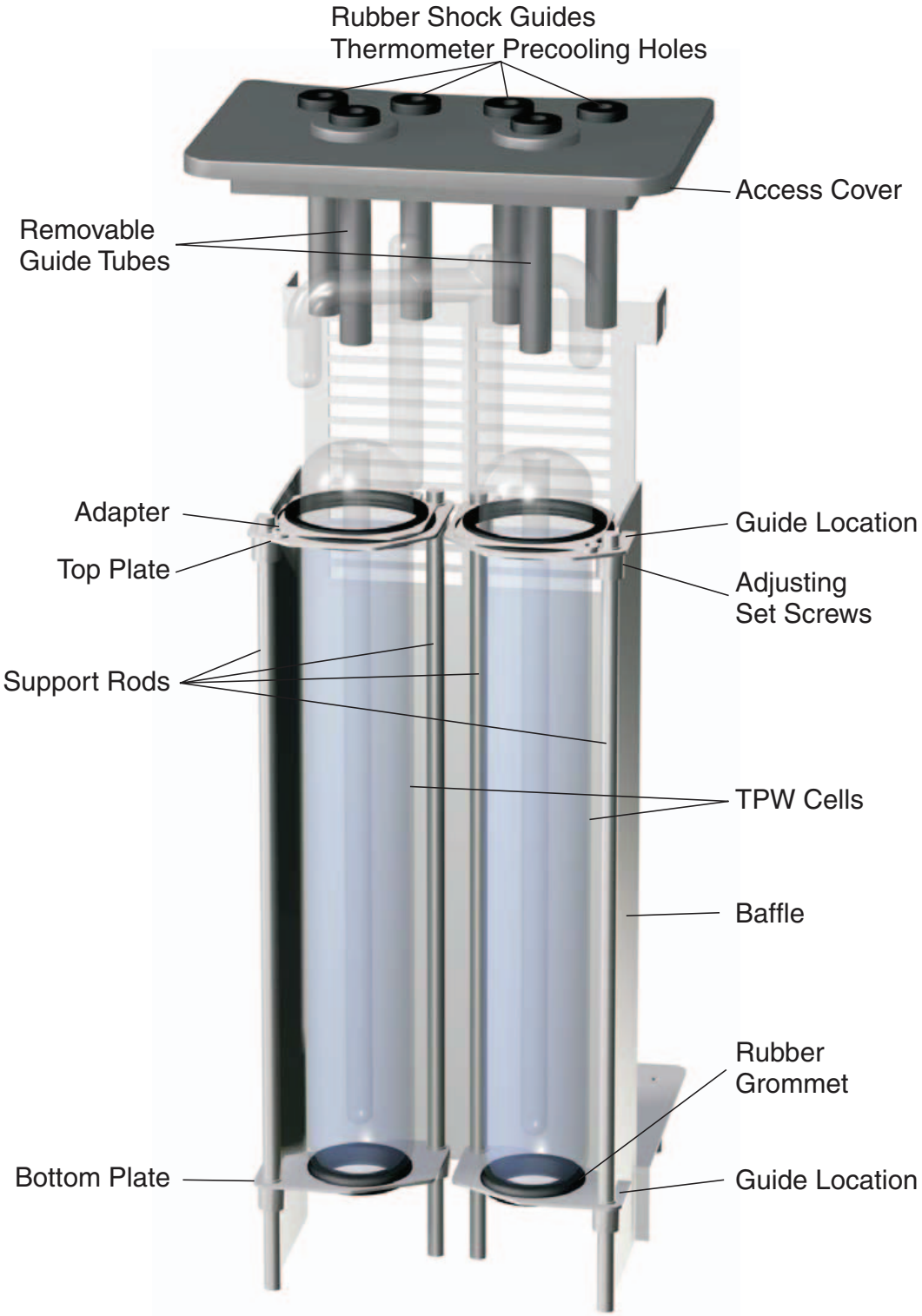

Figure 2 *Details of the Access Cover and Cell Racks*

원문: Fluke Calibration 7312 설명서 · 제조사 원문 자료입니다. 사양은 제조사 사정에 따라 변경될 수 있습니다.

Adjusting the fluid level so that the top bell is exposed permits added heat input to the cell causing the top of the ice mantle to melt. Careful adjustment can adequately maintain the cell while reducing the ice bridging at the top of the cell.

The fluid and fluid level should be regularly checked. If a second cell is added or removed for a prolonged period adjust the fluid level appropriately. Keep the fluid clean. Verify that there is no ice formation on the sides in the lower half of the tank. Formation of ice indicates insufficient alcohol in the water.

6.2.5 Features of the Bath Access Cover

The bath access cover fits over the opening of the bath providing a barrier against the ambient temperature while providing holes for immersion of thermometers. Remove the cover to maintain the cells and bath fluid. Normally the cover must be on. See Figure 2.

The four wells toward the rear of the cover are used for pre-cooling thermometers of typical SPRT size and smaller diameter. Pre-cool each thermometer to the bath temperature in order to prevent melting the ice mantle in the TPW cell. Melting the mantle reduces its lifetime requiring it to be refrozen sooner. Each well has a rubber shock guide at the top to help reduce shock (strain) to the delicate platinum sensor in an SPRT. Underneath the cover, a guide tube helps to prevent the thermometer from contacting internal parts. If the thermometer is longer than 20 inches, the user must retain it to prevent it from striking the bottom.

The two wells in the front permit thermometers to gain access to the TPW cells. They also feature the rubber shock guide and guide tube. The shock guide and guide tube are removable as an assembly to permit shorter thermometers to be more fully immersed into the cell.

6.2.6 Maintenance of the TPW Cell

The TPW cells may be maintained for days to months depending upon care and maintenance and usage of the cell. The following steps are typical.

1. Set up the bath and cells as described above.
2. Pre-cool the cell to the bath temperature prior to freezing the mantle.
3. Freeze the cell according to the manufacturers instructions.
4. Fill the reentrant tube of the cell with chilled bath fluid to a level sufficient to reach the cells water level when a thermometer is inserted.
5. Insert the cell carefully into the bath. Be certain that bottom of the cell is seated on the bottom plate grommet.
6. Verify the bath fluid level is adequate.

The cell may be held in the bath for many weeks if the daily maintenance is properly kept up. The daily maintenance consists of the following:

원문: Fluke Calibration 7312 설명서 · 제조사 원문 자료입니다. 사양은 제조사 사정에 따라 변경될 수 있습니다.

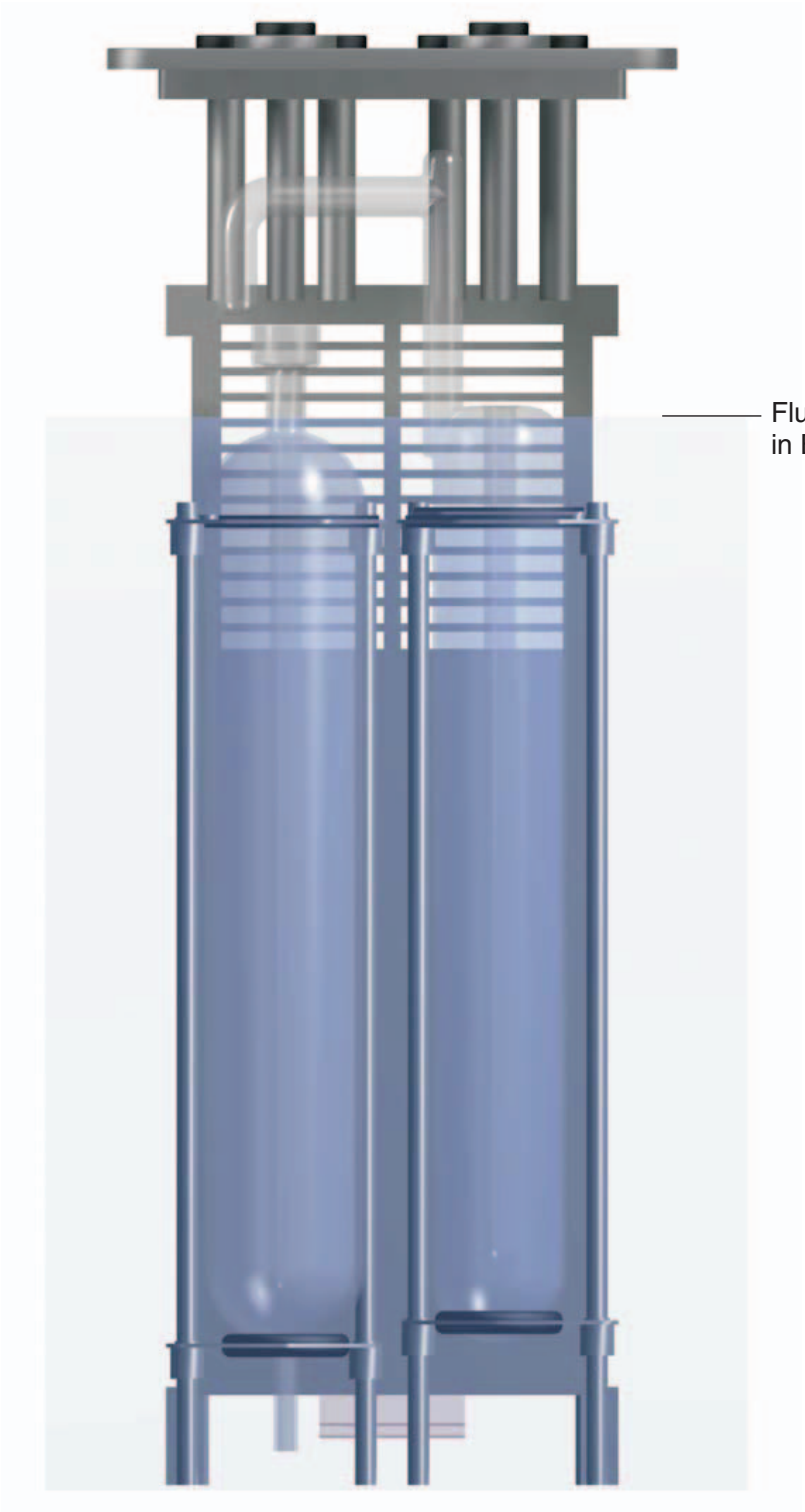

Figure 3 *Fluid Level*

원문: Fluke Calibration 7312 설명서 · 제조사 원문 자료입니다. 사양은 제조사 사정에 따라 변경될 수 있습니다.

Figure 4 *Location of Handles for NBS Design Cells*

- Check for ice bridging every 1 to 3 days as required. Ice bridging is ice forming at the top surface of the water in the cell that bridges from the reentrant tube to the outer glass wall. Ice bridging can cause a cell to be broken. It must be melted back regularly.

CAUTION: *Wipe bath fluid off the cell as it is removed to prevent fluid from running onto the bath controller.*

- Check the ice mantle to see if it is free from the reentrant tube perhaps several times a day depending upon use. This freedom of movement means that there is a thin layer of water all around the reentrant tube. If it is not free to move, small errors result in the acquired temperature. Insert a room temperature rod into the fluid in the reentrant tube transferring heat to the ice until the mantle moves freely. This movement can be checked by rotating the cell quickly around its long axis. The ice tends to stay in place as the cell rotates if it is free.
- Make fine adjustments as needed to the bath set-point temperature to insure that the cell mantle is neither freezing nor melting inappropriately.

원문: Fluke Calibration 7312 설명서 · 제조사 원문 자료입니다. 사양은 제조사 사정에 따라 변경될 수 있습니다.

6.3 Comparison Calibration

Comparison calibration involves testing a probe (unit under test, UUT) against a reference probe. After inserting the probes to be calibrated into the bath, allow sufficient time for the probes to settle and the temperature of the bath to stabilize.

One of the significant dividends of using a bath rather than a dry-well to calibrate multiple probes is that the probes do not need to be identical in construction. The fluid in the bath allows different types of probes to be calibrated at the same time. However, stem effect from different types of probes is not totally eliminated. Even though all baths have horizontal and vertical gradients, these gradients are minimized inside the bath work area. Nevertheless, probes should be inserted to the same depth in the bath liquid. Be sure that all probes are inserted deep enough to prevent stem effect. From research at Hart Scientific, we suggest a general rule-of-thumb for immersion depth to reduce the stem effect to a minimum: 20 x the diameter of the UUT + the sensor length. Do not submerge the probe handles. If the probe handles get too warm during calibration at high temperatures, a heat shield could be used just below the probe handle. This heat shield could be as simple as aluminum foil slid over the probe before inserting it in the bath or as complicated as a specially designed reflective metal apparatus.

When calibrating over a wide temperature range, starting at the highest temperature and progressing down to the lowest temperature can generally achieve better results.

Probes can be held in place in the bath by using probe clamps or drilling holes in the access cover. Other fixtures to hold the probes can be designed. The object is to keep the reference probe and the probe(s) to be calibrated as closely grouped as possible in the working area of the bath. Bath stability is maximized when the bath working area is kept covered.

In preparing to use the bath for calibration start by:

- Placing the reference probe in the bath working area.
- Placing the probe to be calibrated, the UUT, in the bath working area as close as feasibly possible to the reference probe.

6.4 Calibration of Multiple Probes

Fully loading the bath with probes increases the time required for the temperature to stabilize after inserting the probes. Using the reference probe as the guide ensures that the temperature has stabilized before starting the calibration.

원문: Fluke Calibration 7312 설명서 · 제조사 원문 자료입니다. 사양은 제조사 사정에 따라 변경될 수 있습니다.

7 Parts and Controls

7.1 Front Panel

The following controls and indicators are present on the controller front panel (see Figure 5 below): (1) the digital LED display, (2) the control buttons, (3) the bath on/off power switch, (4) the control indicator light, and (5) the cooling on/off switch.

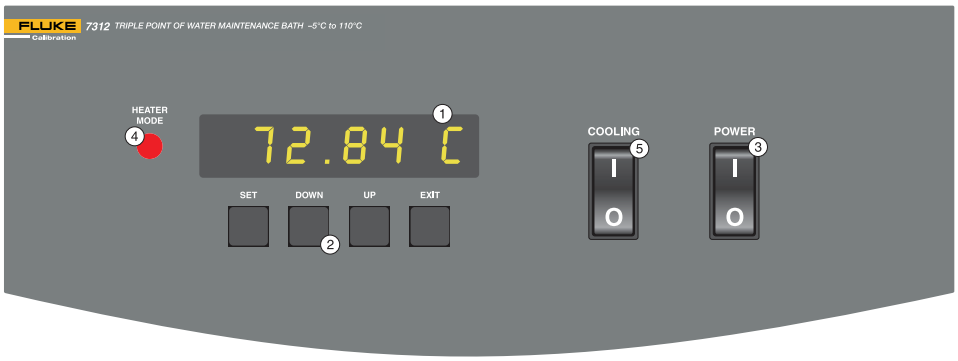

Figure 5 *Front Controller Panel*

1. The digital display is an important part of the temperature controller. It displays the set-point temperature and bath temperature as well as the various other bath functions, settings, and constants. The display shows the temperatures according to the selected scale units °C or °F.

2. The control buttons (SET, DOWN, UP, and EXIT) are used to set the bath temperature set-point, access and set other operating parameters, and access and set bath calibration parameters. A brief description of the functions of the buttons follows:

SET – Used to display the next parameter in a menu and to set parameters to the displayed value.

DOWN – Used to decrement the displayed value of parameters.

UP – Used to increment the displayed value.

EXIT – Used to exit from a menu. When the EXIT button is pressed any changes made to the displayed value are ignored.

3. The on/off switch controls power to the entire bath including the stirring motor.

4. The control indicator is a two color light emitting diode (LED). This indicator lets the user visually see the ratio of heating to cooling. When the indicator is red the heater is on, and when it is green the heater is off and the bath is cooling.

원문: Fluke Calibration 7312 설명서 · 제조사 원문 자료입니다. 사양은 제조사 사정에 따라 변경될 수 있습니다.

5. The cooling on/off switch turns on the refrigeration for control below 50°C and rapid cool down.

7.2 Bath Tank and Lid

The bath tank and lid assembly includes: the tank, the control probe, the stirring motor, the access hole, and the access hole cover. The stirring motor cover covers the stirring motor, cooling fan, control probe, and triple point of water cutout probe.

- The bath tank is constructed of stainless steel. It is very resistant to oxidation in the presence of most chemicals and over a wide range of temperatures.
- The control probe provides the temperature feedback signal to the controller allowing the controller to maintain a constant temperature. The control probe is a precision platinum resistance thermometer (PRT). It is delicate and must be handled carefully. The probe is placed in the small hole in the top of the bath so that the probe tip is fully immersed in the bath fluid.
- The triple point of water cutout probe senses bath temperature and activates the low temperature cutout to turn off the refrigeration below a preset temperature in case of temperature controller failure. This feature is intended to protect triple point of water cells.
- The stirring motor is mounted on the bath tank lid. It drives the stirring propeller to provide mixing of the bath fluid. Proper mixing of the fluid is important for good constant temperature stability.
- The large access hole on the bath lid is used for filling and emptying the bath with fluids and for placement of thermometers, TPW cells, and other devices into the bath.
- An access hole cover should be used to cover the access opening in the top of the bath. This improves bath temperature stability, prevents excess fluid evaporation or fumes and increases safety with hot fluid. The triple point of water cell maintenance access cover provides thermometer wells for precooling and access to the TPW cells. See Section 6.2.6 Maintenance of the TPW Cell.

7.3 Back Panel

On the back of the bath are the system fuses, removable power cord, high-low voltage indicator, drain, serial port, and IEEE-488 port (if installed).

원문: Fluke Calibration 7312 설명서 · 제조사 원문 자료입니다. 사양은 제조사 사정에 따라 변경될 수 있습니다.

8 General Operation

8.1 Heat Transfer Fluid

Many fluids work with 7312 bath. Choosing a fluid requires consideration of many important characteristics of the fluid. Among these are temperature range, viscosity, specific heat, thermal conductivity, thermal expansion, electrical resistivity, fluid lifetime, safety, and cost.

8.1.1 Temperature Range

One of the most important characteristics to consider is the temperature range of the fluid. Few fluids work well throughout the entire temperature range of the bath. The temperature at which the bath is operated must always be within the safe and useful temperature range of the fluid used. The lower temperature range of the fluid is determined either by the freeze point of the fluid or the temperature at which the viscosity becomes too great. The upper temperature is usually limited by vaporization, flammability, or chemical breakdown of the fluid. Vaporization of the fluid at higher temperatures may adversely affect temperature stability because of cool condensed fluid dripping into the bath from the lid.

The bath temperature should be limited by setting the safety cutout so that the bath temperature cannot exceed the safe operating temperature limit of the fluid.

8.1.2 Viscosity

Viscosity is a measure of the thickness of a fluid or how easily it can be poured and mixed. Viscosity affects the temperature uniformity and stability of the bath. With lower viscosity fluid mixing is better creating a more uniform temperature throughout the bath. This improves the bath response time allowing it to maintain a more constant temperature. For good control the viscosity should be less than 10 centistokes. Fifty centistokes is about the practical upper limit of allowable viscosity. Viscosity greater than this causes very poor control stability because of poor stirring and may also overheat or damage the stirring motor. Viscosity may vary greatly with temperature, especially with oils.

When using fluids with higher viscosities the controller proportional band may need to be increased to compensate for the reduced response time. Otherwise the temperature may begin to oscillate.

8.1.3 Specific Heat

Specific heat is the measure of the heat storage ability of the fluid. Specific heat, to a small degree, affects the control stability. It also affects the heating and cooling rates. Generally, a lower specific heat means quicker heating and cooling. The proportional band may require some adjustment depending on the specific heat of the fluid.

원문: Fluke Calibration 7312 설명서 · 제조사 원문 자료입니다. 사양은 제조사 사정에 따라 변경될 수 있습니다.

8.1.4 Thermal Conductivity

Thermal conductivity measures how easily heat flows through the fluid. Thermal conductivity of the fluid affects the control stability, temperature uniformity, and temperature settling time. Fluids with higher conductivity distribute heat more quickly and evenly improving bath performance.

8.1.5 Thermal Expansion

Thermal expansion describes how much the volume of the fluid changes with temperature. Thermal expansion of the fluid must be considered since the increase in fluid volume as the bath temperature increases may cause overflow. It may be dangerous to permit the fluid to overflow the tank. It may also cause loss of valuable bath fluid. Excessive thermal expansion may also be undesirable in applications where constant liquid level is important.

Thermal expansion coefficients of several fluids are shown in Table 2, Table of Bath Fluids. Fluid manufacturers can also provide this information. The thermal expansion coefficients are shown in units of cm/cm/°C, however, the values are the same for any units of length. Divide the value by 1.8 for °F coefficients. The following equation may be used to find the desired depth:

De = Ds [K(Te-Ts)+1]

Or

Ds = De/[K(Te-Ts)+1] where De < or = The Maximum Fill Depth

Where:

K=Expansion coefficient

Te=Ending Temperature

Ts=Starting Temperature

De=Ending Depth

Ds=Starting Depth

The maximum fill depth is typically 0.5 to 0.8 inches below the level of the gasket at the top of the bath tank (not the top of the bath lid). Judgment must be made with different stirring arrangements to prevent splashing on the gasket or lid of the bath.

Example:

The final depth of Dow Corning 710 silicone oil in the bath tank is to be 9.2 inches when heated from 25 to 300°C. What should the starting depth be?

Expansion coefficient for 710 oil on Table 2, K=0.00077 inch/inch/°C

Ending temperature, Te=300°C

Starting temperature, Ts=25°C

Ending depth, De=9.2 inches

원문: Fluke Calibration 7312 설명서 · 제조사 원문 자료입니다. 사양은 제조사 사정에 따라 변경될 수 있습니다.

Ds=9.2/[0.00077 (300-25) + 1] = 7.59 inches

8.1.6 Electrical Resistivity

Electrical resistivity describes how well the fluid insulates against the flow of electric current. In some applications, such as measuring the resistance of bare temperature sensors, it may be important that little or no electrical leakage occur through the fluid. In such conditions choose a fluid with very high electrical resistivity.

8.1.7 Fluid Lifetime

Many fluids degrade over time because of vaporization, water absorption, gelling, or chemical breakdown. Often the degradation becomes significant near the upper temperature limit of the fluid, substantially reducing the fluid's lifetime.

8.1.8 Safety

When choosing a fluid always consider the safety issues associated. Obviously where there are extreme temperatures there can be danger to personnel and equipment. Fluids may also be hazardous for other reasons. Some fluids may be considered toxic. Contact with eyes, skin, or inhalation of vapors may cause injury. A proper fume hood must be used if hazardous or bothersome vapors are produced.

WARNING: *Fluids at high temperatures may pose danger from BURNS, FIRE, and TOXIC FUMES. Use appropriate caution and safety equipment.*

Fluids may be flammable and require special fire safety equipment and procedures. An important characteristic of the fluid to consider is the flash point. The flash point is the temperature at which there is sufficient vapor given off so that when there is adequate oxygen present and an ignition source is applied the vapor ignites. This does not necessarily mean that fire is sustained at the flash point. The flash point may be either of the open cup or closed cup type. Either condition may occur in a bath situation. The open cup flash point is measured under the condition of vapors escaping the tank. The closed cup flash point is measured with the vapors being contained within the tank. Since oxygen and an ignition source is less available inside the tank the closed cup flash point is lower than the open cup flash point.

Environmentally hazardous fluids require special disposal according to applicable federal or local laws after use.

원문: Fluke Calibration 7312 설명서 · 제조사 원문 자료입니다. 사양은 제조사 사정에 따라 변경될 수 있습니다.

8.1.9 Cost

Cost of bath fluids may vary greatly, from cents per gallon for water to hundreds of dollars per gallon for synthetic oils. Cost may be an important consideration when choosing a fluid.

8.1.10 Commonly Used Fluids

Below is a description of some of the more commonly used fluids and their characteristics.

8.1.10.1 Water

Water is often used because of its very low cost, its availability, and its excellent temperature control characteristics. Water has a very low viscosity and good thermal conductivity and heat capacity, which make it among the best fluids for good control stability at lower temperatures. Temperature stability is much poorer at higher temperatures because water condenses on the lid, cools and drips into the bath. Water is safe and relatively inert. The electrical conductivity of water may prevent its use in some applications. Water has a limited temperature range, from a few degrees above 0°C to a few degrees below 100°C. At higher temperatures evaporation becomes significant. Water used in the bath should be distilled or deionized to prevent mineral deposits. Consider using an algaecide chemical in the water to prevent contamination.

8.1.10.2 Ethylene Glycol

The temperature range of water may be extended by using a solution of one part water and one part ethylene glycol (antifreeze). The characteristics of the ethylene glycol-water solution are similar to water but with higher viscosity. Use caution with ethylene glycol since this fluid is very toxic. Ethylene glycol must be disposed of properly.

8.1.10.3 Mineral Oil

Mineral oil or paraffin oil is often used at moderate temperatures above the range of water. Mineral oil is relatively inexpensive. At lower temperatures mineral oil is quite viscous and control may be poor. At higher temperatures vapor emission becomes significant. The vapors may be dangerous and a fume hood should be used. As with most oils mineral oil expands as temperature increases so be careful not to fill the bath too full that it overflows when heated. The viscosity and thermal characteristics of mineral oil is poorer than water so temperature stability is not as good. Mineral oil has very low electrical conductivity. Use caution with mineral oil since it is flammable and may also cause serious injury if inhaled or ingested.

8.1.10.4 Silicone Oil

Silicone oils are available which offer a much wider operating temperature range than mineral oil. Like most oils, silicone oils have temperature control

원문: Fluke Calibration 7312 설명서 · 제조사 원문 자료입니다. 사양은 제조사 사정에 따라 변경될 수 있습니다.

characteristics, which are somewhat poorer than water. The viscosity changes significantly with temperature and also causes thermal expansion to occur. These oils have very high electrical resistivity. Silicone oils are fairly safe and non-toxic. Silicone oils are fairly expensive.

8.1.11 Fluid Characteristics Charts

Table 2 and Figure 6 on pages 36 and 37 have been created to provide help in selecting a heat exchange fluid media for your constant temperature bath. These charts provide both a visual and numerical representation of most of the physical qualities important in making a selection. The list is not all inclusive. There may be other useful fluids not shown in this listing. The charts include information on a variety of fluids, which are often used as heat transfer fluid in baths. Because of the temperature range some fluids may not be useful with your bath.

8.1.11.1 Limitations and Disclaimer

The information given in this manual regarding fluids is intended to be used as a general guide in choosing a fluid. Though every effort has been made to provide correct information we cannot guarantee accuracy of data or assure suitability of a fluid for a particular application. Specifications may change and sources sometimes offer differing information. Hart Scientific cannot be liable for any personal injury or damage to equipment, product or facilities resulting from the use of these fluids. The user of the bath is responsible for collecting correct information, exercising proper judgment, and insuring safe operation. Operating near the limits of certain properties such as the flash point or viscosity can compromise safety or performance. Your company's safety policies regarding flash points, toxicity, and such issues must be considered. You are responsible for reading the MSDS (material safety data sheets) and acting accordingly.

8.1.11.2 About the Graph

The fluid graph visually illustrates some of the important qualities of the fluids shown.

Temperature Range: The temperature scale is shown in degrees Celsius. The shaded bands indicate the fluids' general range of application. Qualities including pour point, freeze point, important viscosity points, flash point, boiling point and others may be shown.

Freezing Point: The freezing point of a fluid is an obvious limitation to stirring. As the freezing point is approached high viscosity may also limit performance.

Fume Point: The point at which a fume hood should be used. This point is very subjective in nature and is impacted by individual tolerance to different fumes and smells, how well the bath is covered, the surface area of the fluid in the bath, the size and ventilation of the facility where the bath is located and

원문: Fluke Calibration 7312 설명서 · 제조사 원문 자료입니다. 사양은 제조사 사정에 따라 변경될 수 있습니다.

Table 2 *Table of Various Bath Fluids and Their Properties*

Fluid (# = Hart Part No.)	Lower Temperature Limit*	Upper Temperature Limit*	Flash Point	Viscosity (centistokes)	Specific Gravity	Specific Heat (cal/g/°C)	Thermal Conductivity (cal/s/cm/°C)	Thermal Expansion (cm/cm/°C)	Resistivity ($10^{12}\Omega$-cm)
Halocarbon 0.8 #5019	–100°C (v)**	70°C (e)	NONE	5.7 @ –50°C 0.8 @ 40°C 0.5 @ 70°C	1.71 @ 40°C	0.2	0.0004	0.0011	
Methanol	–96°C (fr)	10°C (fl,cc)	12°C	1.3 @ –35°C 0.66 @ 0°C 0.45 @ 20°C	0.810 @ 0°C 0.792 @ 20°C	0.6	0.0005 @ 20°C	0.0014 @ 25°C	
Water	0°C (fr)	95°C (b)	NONE	1 @ 25°C 0.4 @ 75°C	1.00	1.00	0.0014	0.0002 @ 25°C	
Ethylene Glycol—50% #5020	–30°C (fr)	90°C (b)	NONE	7 @ 0°C 2 @ 50°C 0.7 @ 100°C	1.05	0.8 @ 0°C	0.001		
Mineral Oil No.7 #5011	10°C (v)	166°C (fl)	168°C	15 @ 75°C 5 @ 125°C	0.87 @ 25°C 0.84 @ 75°C 0.81 @ 125°C	0.48 @ 25°C 0.53 @ 75°C 0.57 @ 125°C	0.00025 @ 25°C	0.0007 @ 50°C	5 @ 25°C
Silicone Oil Type 200.05 #5010	–40°C (v)**	130°C (fl, cc)	133°C	5 @ 25°C	0.92 @ 25°C	0.4	0.00028 @ 25°C	0.00105	1000 @ 25°C 10 @ 150°C
Silicone Oil Type 200.10 #5012	–30°C (v)**	209°C (fl, cc)	211°C	10 @ 25°C 3 @ 135°C	0.934 @ 25°C	0.43 @ 40°C 0.45 @ 100°C 0.482 @ 200°C	0.00032 @ 25°C	0.00108	1000 @ 25°C 50 @ 150°C
Silicone Oil Type 200.20 #5013	10°C (v)	230°C (fl, cc)	232°C	20 @ 25°C	0.949 @ 25°C	0.370 @ 40°C 0.393 @ 100°C 0.420 @ 200°C	0.00034 @ 25°C	0.00107	1000 @ 25°C 50 @ 150°C
Silicone Oil Type 200.50 #5014	30°C (v)	278°C (fl, cc)	280°C	50 @ 25°C	0.96 @ 25°C	0.4	0.00037 @ 25°C	0.00104	1000 @ 25°C 50 @ 150°C
Silicone Oil Type 550 #5016	70°C (v)	230°C (fl, cc) 300°C (fl, oc)	232°C	50 @ 70°C 10 @ 104°C	1.07 @ 25°C	0.358 @ 40°C 0.386 @ 100°C 0.433 @ 200°C	0.00035 @ 25°C	0.00075	100 @ 25°C 1 @ 150°C
Silicone Oil Type 710 #5017	80°C (v)	300°C (fl, oc)	302°C	50 @ 80°C 7 @ 204°C	1.11 @ 25°C	0.363 @ 40°C 0.454 @ 100°C 0.505 @ 200°C	0.00035 @ 25°C	0.00077	100 @ 25°C 1 @ 150°C
Silicone Oil Type 210-H	66°C (v)	313°C (fl, oc)	315°C	50 @ 66°C 14 @ 204°C	0.96 @ 25°C	0.34 @ 100°C	0.0003	0.00095	100 @ 25°C 1 @ 150°C
Heat Transfer Salt #5001	180°C (fr)	550°C	NONE	34 @ 150°C 6.5 @ 300°C 2.4 @ 500°C	2.0 @ 150°C 1.9 @ 300°C 1.7 @ 500°C	0.33	0.0014	0.00041	1.7 Ω /cm^3

*Limiting Factors — b - boiling point e - high evaporation fl - flash point fr - freeze point v - viscosity — Flash point test oc = open cup cc = closed cup
**Very low water solubility, ice will form as a slush from condensation below freezing.

other conditions. We assume the bath is well covered at this point. This is also subject to company policy.

Flash Point: The point at which ignition may occur. The point shown may be either the open or closed cup flash point. Refer to the flash point discussion in Section 9.1.8, Safety.

Boiling Point: At or near the boiling point of the fluid the temperature stability is difficult to maintain. Fuming or evaporation is excessive. Large amounts of heater power may be required because of the heat of vaporization.

원문: Fluke Calibration 7312 설명서 · 제조사 원문 자료입니다. 사양은 제조사 사정에 따라 변경될 수 있습니다.

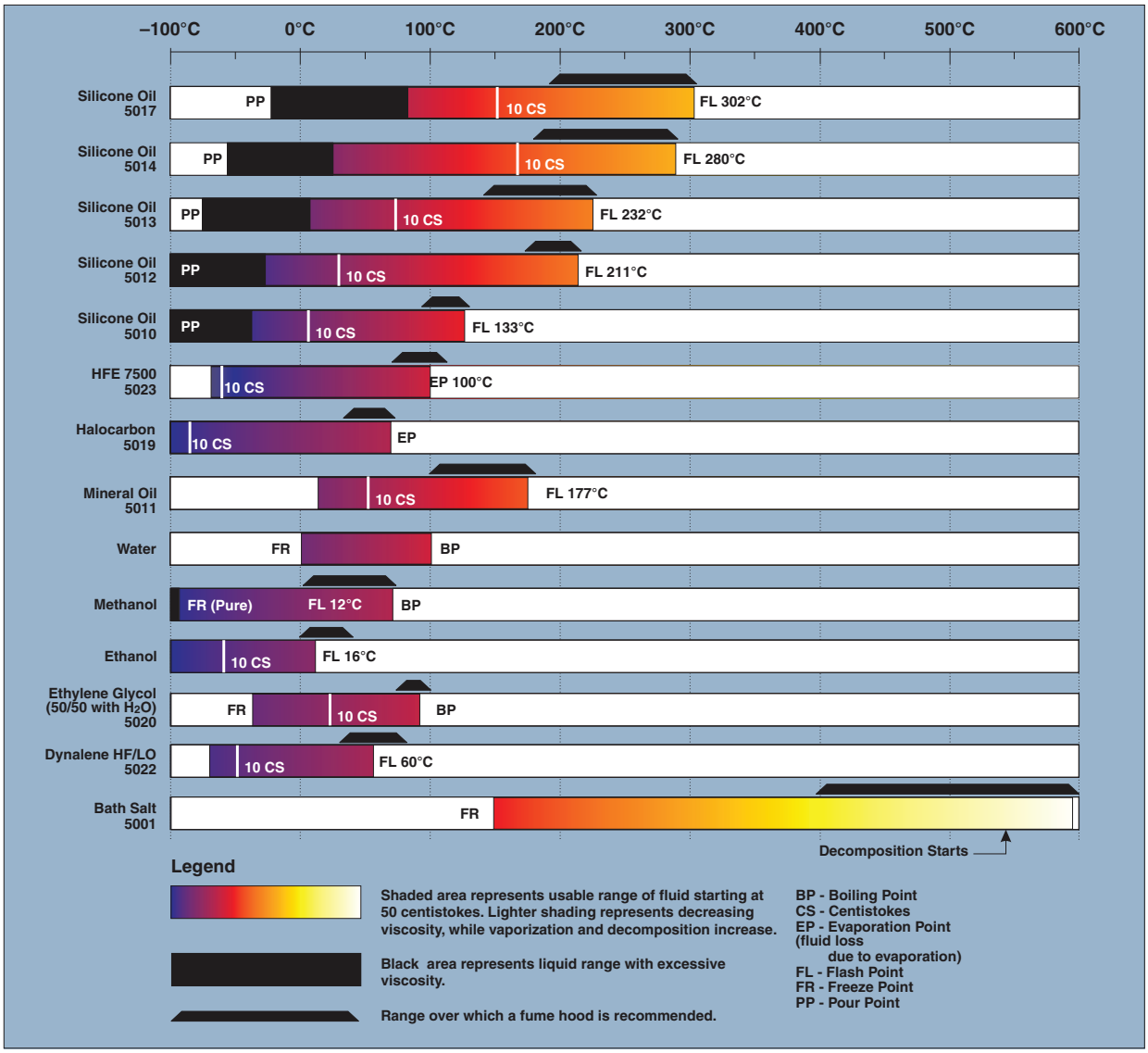

Figure 6 *Chart of Various Bath Fluids and Their Properties*

Decomposition: The temperature may reach a point at which decomposition of the fluid begins. Further increasing the temperature may accelerate decomposition to the point of danger or impracticality.

8.2 Stirring

Stirring of the bath fluid is very important for stable temperature control. The fluid must be mixed well for good temperature uniformity and fast controller response. The stirrer is precisely adjusted for optimum performance.

원문: Fluke Calibration 7312 설명서 · 제조사 원문 자료입니다. 사양은 제조사 사정에 따라 변경될 수 있습니다.

8.3 Power

Power to the bath is provided by an AC mains supply. Refer to Section 3.1, Specifications, for power details. Refer to and read the CAUTION at the front of the manual concerning brownout and over voltage protection. Check the back panel label for the correct voltage and frequency prior to energizing the unit. Power to the bath passes through a filter to prevent switching spikes from being transmitted to other equipment.

To turn on the bath, switch the control panel power switch to the ON position. The stirring motor turns on, the LED display begins to show the bath temperature, and the heater turns on or off until the bath temperature reaches the programmed set-point.

When powered on, the control panel display briefly shows a four digit number. This number indicates the number of times power has been applied to the bath. Also briefly displayed is data, which indicates the controller hardware configuration. This data is used in some circumstances for diagnostic purposes.

8.4 Heater

The temperature controller precisely controls the bath heater to maintain a constant bath temperature. Power is controlled by periodically switching the heater on for a certain amount of time using a solid-state relay.

The front panel red/green control indicator shows the state of the heater. The control indicator glows red when the heater is on and glows green when the heater is off. The indicator pulses constantly when the bath is maintaining a stable temperature.

8.5 Temperature Controller

Hart Scientific's unique hybrid digital/analog temperature controller controls the bath temperature. The controller offers the tight control stability of an analog temperature controller as well as the flexibility and programmability of a digital controller.

The bath temperature is monitored with a platinum resistance sensor in the control probe. The signal is electronically compared with the programmable reference signal, amplified, and then passed to a pulse-width modulator circuit, which controls the amount of power applied to the bath heater. The bath is operable within the temperature range given in the specifications. For protection against solid-state relay failure or other circuit failure, the micro-controller automatically turns off the heater with a second mechanical relay anytime the bath temperature is more than a certain amount above the set-point temperature. As a second protection device, the controller is also equipped with a separate thermocouple temperature monitoring circuit, which shuts off the heater if the temperature exceeds the cutout set-point.

원문: Fluke Calibration 7312 설명서 · 제조사 원문 자료입니다. 사양은 제조사 사정에 따라 변경될 수 있습니다.

The controller allows the operator to set the bath temperature with high resolution, set the cutout, adjust the proportional band, monitor the heater output power, and program the controller configuration and calibration parameters. The controller may be operated in temperature units of degrees Celsius or Fahrenheit. The controller is operated and programmed from the front control panel using the four key switches and digital LED display. Remote digital operation with the controller is possible via the standard RS-232 serial port. The controller may be optionally equipped with an IEEE-488 GPIB digital interface. Operation of the controller using the front control panel is discussed following in Section 9, Controller Operation. Operation using the digital interface is discussed in Section 10, Digital Communication Interface.

When the controller is set to a new set-point the bath heats or cools to the new temperature. Once the new temperature is reached the bath usually takes 10-15 minutes for the temperature to settle and stabilize. There may be a small overshoot or undershoot of about 0.5°C.

8.6 Refrigeration

Bath cooling below 50°C is provided by a compact refrigeration system. The system utilizes the ozone safe R-134A refrigerant. The refrigerant is metered through an automatic expansion valve to achieve bath temperatures as low as –5°C. The evaporator and heater are sandwiched to the sides of the tank. This provides the precision control over heat gains and losses required for high stability. The refrigeration is not required to maintain the bath above 45 to 50°C. Continuous use of the refrigeration above 50°C will damage the compressor. The refrigeration may be used for short periods of time for cooling down the bath to a lower temperature. Do not exceed 60 minutes cooling above 50°C.

원문: Fluke Calibration 7312 설명서 · 제조사 원문 자료입니다. 사양은 제조사 사정에 따라 변경될 수 있습니다.

9 Controller Operation

This chapter discusses in detail how to operate the bath temperature controller using the front control panel. Using the front panel key switches and LED display the user may monitor the bath temperature, set the temperature set-point in degrees C or F, monitor the heater output power, adjust the controller proportional band, set the cutout set-point, and program the probe calibration parameters, operating parameters, serial and IEEE-488 interface configuration, and controller calibration parameters. Operation is summarized in Figure 4.

9.1 Bath Temperature

The digital LED display on the front panel allows direct viewing of the actual bath temperature. This temperature value is what is normally shown on the display. The units, C or F, of the temperature value are displayed at the right. For example,

25.00 C *Bath temperature in degrees Celsius*

The temperature display function may be accessed from any other function by pressing the “EXIT” button.

9.2 Reset Cutout

If the over-temperature cutout has been triggered, the temperature display alternately flashes.

cut-out *Indicates cutout condition*

The message continues to flash until the temperature is reduced and the cutout is reset.

The cutout has two modes – automatic reset and manual reset. The mode determines how the cutout is reset which allows the bath to heat up again. When in automatic mode, the cutout resets itself as soon as the temperature is lowered below the cutout set-point. With manual reset mode the cutout must be reset by the operator after the temperature falls below the set-point.

When the cutout is active and the cutout mode is set to manual (“reset”), the display flashes “cutout” until the user resets the cutout. To access the reset cutout function, press the “SET” button.

SET *Access cutout reset function*

The display indicates the reset function.

RESET *Cutout reset function*

원문: Fluke Calibration 7312 설명서 · 제조사 원문 자료입니다. 사양은 제조사 사정에 따라 변경될 수 있습니다.

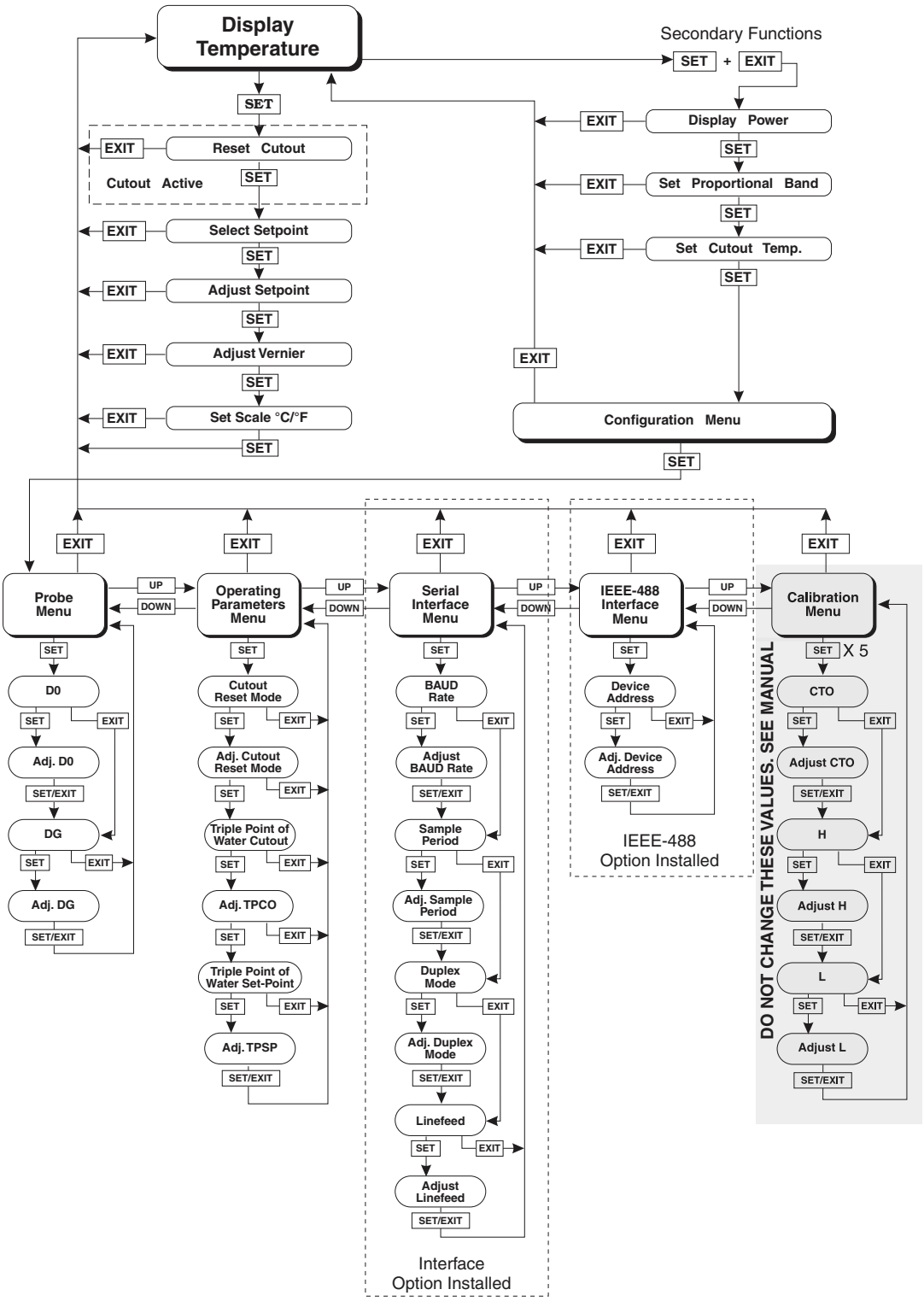

Figure 7 *Controller Operation Flowchart*

원문: Fluke Calibration 7312 설명서 · 제조사 원문 자료입니다. 사양은 제조사 사정에 따라 변경될 수 있습니다.

Press the “SET” button once more to reset the cutout.

SET *Reset cutout*

This action also switches the display to the set temperature function. To return to displaying the temperature, press the “EXIT” button. If the cutout is still in the over-temperature fault condition, the display continues to flash “cutout”. The bath temperature must drop a few degrees below the cutout set-point before the cutout can be reset.

9.3 Temperature Set-point

The bath temperature can be set to any value within the range and with resolution as given in the specifications. The operator must know the temperature range of the particular fluid used in the bath and the bath should only be operated well below the upper temperature limit of the liquid. In addition, the cutout temperature should also be set below the upper limit of the fluid.

Setting the bath temperature involves three steps: 1) selecting the set-point memory, 2) adjusting the set-point value, and 3) adjusting the vernier (if desired).

9.3.1 Programmable Set-points

The controller stores 8 set-point temperatures in memory. The set-points can be quickly recalled to conveniently set the bath to a previously programmed temperature set-point.

To set the bath temperature, first select the set-point memory. This function is accessed from the temperature display function by pressing the “SET” button. The number of the set-point memory currently being used is shown at the left on the display followed by the current set-point value.

25.00 C *Bath temperature in degrees Celsius*

SET *Access set-point memory*

1. 25.0 *Set-point memory 1, 25.0°C currently used*

To change the set-point memory press the “UP” or “DOWN” button.

UP *Increment memory*

Press the “SET” button to accept the new selection and access the set-point value.

SET *Accept selected set-point memory*

원문: Fluke Calibration 7312 설명서 · 제조사 원문 자료입니다. 사양은 제조사 사정에 따라 변경될 수 있습니다.

9.3.2 Set-point Value

The set-point value may be adjusted after selecting the set-point memory and pressing the "SET" button. The set-point value is displayed with the units, C or F, at the left.

C 40.00 *Set-point value in °C*

If the set-point value does not need to be changed, press the "EXIT" button to resume displaying the bath temperature. Press the "UP" or "DOWN" button to adjust the set-point value.

UP *Increment display*

C 42.50 *New set-point value*

When the desired set-point value is reached, press the "SET" button to accept the new value and to access the set-point vernier. If the "EXIT" button is pressed instead, any changes made to the set-point are ignored.

SET *Accept new set-point value*

9.3.3 Set-point Vernier

The set-point value can be set with a resolution of 0.01°C. The user may want to adjust the set-point slightly to achieve a more precise bath temperature. The set-point vernier allows one to adjust the temperature below or above the set-point by a small amount with a very high resolution. Each of the eight stored set-points has an associated vernier setting. The vernier is accessed from the set-point by pressing the "SET" button. The vernier setting is displayed as a six digit number with five digits after the decimal point. This is a temperature offset in degrees of the selected units, C or F.

0.00000 *Current vernier value in °C*

To adjust the vernier, press the "UP" or "DOWN" button. Unlike most functions the vernier setting has immediate effect as the vernier is adjusted. The "SET" button need not be pressed. This allows one to continually adjust the bath temperature with the vernier as it is displayed.

4. 40.0 *New set-point memory 4, 40.0°C*

UP *Increment display*

0.00090 *New vernier setting*

원문: Fluke Calibration 7312 설명서 · 제조사 원문 자료입니다. 사양은 제조사 사정에 따라 변경될 수 있습니다.

Next press the “EXIT” button to return to the temperature display or the “SET” button to access the temperature scale units selection.

SET *Access scale units*

9.4 Temperature Scale Units

The temperature scale units of the controller may be set by the user to degrees Celsius (°C) or Fahrenheit (°F). The units are used in displaying the bath temperature, set-point, vernier, proportional band, and cutout set-point.

The temperature scale units selection is accessed after the vernier adjustment function by pressing the “SET” button. From the temperature display function, access the units selection by pressing “SET” 4 times.

25.0 *Bath temperature*

SET *Access et-point memory*

1. 25.0 *Set-point memory*

SET *Access set-point value*

C 25.00 *Set-point value*

SET *Access vernier*

0.00000 *Vernier setting*

SET *Access scale units selection*

Un= C *Scale units currently selected*

Press the “UP” or “DOWN” button to change the units.

UP *Change units*

Un=F *New units selected*

Press the “SET” button to accept the new selection and resume displaying the bath temperature.

SET *Set the new units and resume temperature display*

원문: Fluke Calibration 7312 설명서 · 제조사 원문 자료입니다. 사양은 제조사 사정에 따라 변경될 수 있습니다.

9.5 Secondary Menu

Functions, which are used less often, are accessed within the secondary menu. The secondary menu is accessed by pressing the "SET" and "EXIT" buttons simultaneously and then releasing. The first function in the secondary menu is the heater power display.

9.6 Heater Power

The temperature controller controls the temperature of the bath by pulsing the heater on and off. The total power being applied to the heater is determined by the duty cycle or the ratio of heater on time to the pulse cycle time. This value may be estimated by watching the red/green control indicator light or read directly from the digital display. By knowing the amount of heating the user can tell if the bath is heating up to the set-point, cooling down, or controlling at a constant temperature. Monitoring the percent heater power lets the user know the stability of the bath. With good control stability the percent heating power should not fluctuate more than ±1% within one minute.

The heater power display is accessed in the secondary menu. Press the "SET" and "EXIT" button simultaneously and release. The heater power is displayed as a percentage of full power.

SET + EXIT *Access heater power in secondary menu*

12 Pct *Heater power in percent*

To exit out of the secondary menu, press the "EXIT" button. To continue on to the proportional band setting, press the "SET" button.

EXIT *Return to temperature display*

9.7 Proportional Band

In a proportional controller such as this the heater output power is proportional to the bath temperature over a limited range of temperatures around the set-point. This range of temperature is called the proportional band. At the bottom of the proportional band the heater output is 100%. At the top of the proportional band the heater output is 0. Thus as the bath temperature rises the heater power is reduced, which consequently tends to lower the temperature back down. In this way the temperature is maintained at a fairly constant temperature.

The temperature stability of the bath depends on the width of the proportional band (see Figure 5). If the proportional band is too wide, the bath temperature deviates excessively from the set-point due to varying external conditions. This is because the power output changes very little with temperature and the controller cannot respond very well to changing conditions or noise in the system.

원문: Fluke Calibration 7312 설명서 · 제조사 원문 자료입니다. 사양은 제조사 사정에 따라 변경될 수 있습니다.

If the proportional band is too narrow the bath temperature may swing back and forth because the controller overreacts to temperature variations. For best control stability the proportional band must be set for the optimum width.

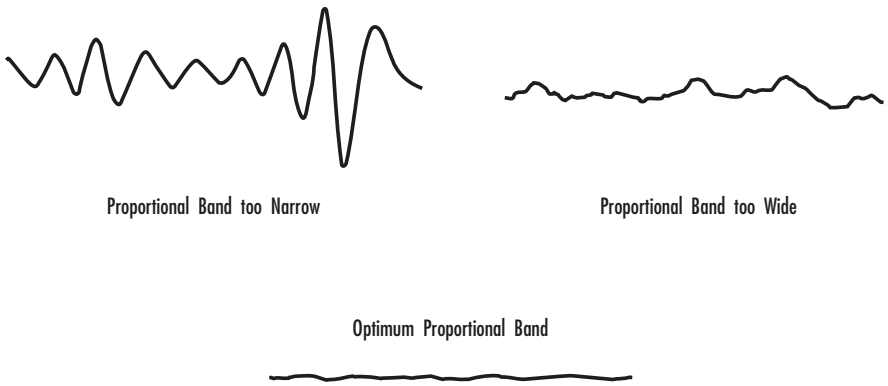

Figure 8 *Bath Temperature Fluctuation at Various Proportional Band Settings*

The optimum proportional band width depends on several factors among which are fluid volume, fluid characteristics (viscosity, specific heat, thermal conductivity), heater power setting, operating temperature, and stirring. Thus the proportional band width may require adjustment for best bath stability when any of these conditions change. Of these, the most significant factors affecting the optimum proportional width are heater power setting and fluid viscosity. The proportional band should be wider when the higher power setting is used so that the change in output power per change in temperature remains the same. The proportional band should also be wider when the fluid viscosity is higher because of the increased response time.

The proportional band width is easily adjusted from the bath front panel. The width may be set to discrete values in degrees C or F depending on the selected units. The optimum proportional band width setting may be determined by monitoring the stability with a high resolution thermometer or with the controller percent output power display. Narrow the proportional band width to the point at which the bath temperature begins to oscillate and then increase the band width from this point to 3 or 4 times wider. Table 3 lists typical propor-

원문: Fluke Calibration 7312 설명서 · 제조사 원문 자료입니다. 사양은 제조사 사정에 따라 변경될 수 있습니다.

tional band settings for optimum performance with a variety of fluids at selected temperatures.

Table 3 *Proportional Band - Fluid Table*

Fluid	Temperature	Proportional Band	Stability
Water	30°C	0.31°C	±0.003°C
Water	60°C	0.31°C	±0.003°C
Eth-Gly 50%	35°C	0.31°C	±0.005°C
Eth-Gly 50%	60°C	0.31°C	±0.005°C
Eth-Gly 50%	100°C	0.4°C	±0.010°C
Oil 200, 10cs	35°C	0.6°C	±0.004°C
Oil 200, 10cs	60°C	0.6°C	±0.004°C
Oil 200, 10cs	100°C	0.6°C	±0.004°C
Oil 710	200°C	0.4°C	±0.008°C

The proportional band adjustment may be accessed within the secondary menu. Press the "SET" and "EXIT" buttons to enter the secondary menu and show the heater power. Then press the "SET" button to access the proportional band.

SET + EXIT *Access heater power in secondary menu*

12 Pct *Heater power in percent*

SET *Access proportional band*

Pb = 1.101C *Proportional band setting*

To change the proportional band, press the "UP" or "DOWN" buttons.

DOWN *Decrement display*

Pb=0.060C *New proportional band setting*

To accept the new setting and access the cutout set-point, press the "SET" button. Pressing the "EXIT" button exits the secondary menu ignoring any changes just made to the proportional band value.

SET *Accept the new proportional band setting*

원문: Fluke Calibration 7312 설명서 · 제조사 원문 자료입니다. 사양은 제조사 사정에 따라 변경될 수 있습니다.

9.8 Cutout

As a protection against software or hardware fault, shorted heater triac, or user error, the bath is equipped with an adjustable heater cutout device that shuts off power to the heater if the bath temperature exceeds a set value. This protects the heater and bath materials from excessive temperatures and, most importantly, protects the bath fluids from being heated beyond the safe operating temperature preventing hazardous vaporization, breakdown, or ignition of the liquid. The cutout temperature is programmable by the operator from the front panel of the controller. It must always be set below the upper temperature limit of the fluid and no more than 10 degrees above the upper temperature limit of the bath.

If the cutout is activated because of excessive bath temperature, the power to the heater is shut off and the bath cools. The bath cools until it reaches a few degrees below the cutout set-point temperature. At this point, the action of the cutout is determined by the setting of the cutout mode parameter.

The cutout has two selectable modes – automatic reset or manual reset. If the mode is set to automatic, the cutout automatically resets when the bath temperature falls below the reset temperature allowing the bath to heat up again. If the mode is set to manual, the heater remains disabled until the user manually resets the cutout.

The cutout set-point may be accessed within the secondary menu. Press the “SET” and “EXIT” button to enter the secondary menu and show the heater power. Then press the “SET” button twice to access the cutout set-point.

SET + EXIT *Access heater power in secondary menu*

12 Pct *Heater power in percent*

SET *Access proportional band*

Pb = 0.101C *Proportional band setting*

SET *Access cutout set-point*

CO = 110C *Cutout set-point*

To change the cutout set-point, press the “UP” or “DOWN” button.

DOWN *Decrement display*

CO = 75C *New cutout set-point*

To accept the new cutout set-point, press the “SET” button.

원문: Fluke Calibration 7312 설명서 · 제조사 원문 자료입니다. 사양은 제조사 사정에 따라 변경될 수 있습니다.

SET *Accept cutout set-point*

The next function is the configuration menu. Press the "EXIT" button to resume displaying the bath temperature.

9.9 Controller Configuration

The controller has a number of configuration and operating options and calibration parameters, which are programmable via the front panel. These are accessed from the secondary menu after the cutout set-point function by pressing "SET". There are five sets of configuration parameters—probe parameters, operating parameters, serial interface parameters, IEEE-488 interface parameters, and controller calibration parameters. The menus are selected using the "UP" and "DOWN" buttons and then pressing the "SET" button.

9.10 Probe Parameters

The probe parameter menu is indicated by,

PrObE *Probe parameters menu*

Press the "SET" button to enter the menu. The probe parameters menu contains the parameters, D0 and DG, which characterize the resistance-temperature relationship of the thermistor control probe. These parameters may be adjusted to improve the accuracy of the bath. This procedure is explained in detail in Section 11.

The probe parameters are accessed by pressing the "SET" button after the name of the parameter is displayed. The value of the parameter may be changed using the "UP" and "DOWN" buttons. After the desired value is reached, press the "SET" button to set the parameter to the new value. Pressing the "EXIT" button causes the parameter to be skipped ignoring any changes that may have been made.

9.10.1 D0

This probe parameter refers to the resistance of the control probe at 0°C. Normally this is set for –25.2290 ohms.

9.10.2 DG

This probe parameter refers to the average sensitivity of the probe between 0 and 100°C. Normally this is set for 186.7940.

9.11 Operating Parameters

The operating parameters menu is indicated by,

원문: Fluke Calibration 7312 설명서 · 제조사 원문 자료입니다. 사양은 제조사 사정에 따라 변경될 수 있습니다.

PAr *Operating parameters menu*

Press the “UP” button to enter the menu. The operating parameters menu contains the cutout reset mode parameter.

9.11.1 Cutout Reset Mode

The cutout reset mode determines whether the cutout resets automatically when the bath temperature drops to a safe value or must be manually reset by the operator.

The parameter is indicated by,

Ctorst *Cutout reset mode parameter*

Press the “SET” button to access the parameter setting. Normally the cutout is set for manual mode.

Cto=rst *Cutout set for manual reset*

To change to automatic reset mode, press the “UP” button and then the “SET” button.

Cto=Auto *Cutout set for automatic reset*

9.11.2 Triple Point of Water Cutout

The triple point of water cutout protects the TPW cell in case of system failure, which may cause the bath to rapidly cool below the maintenance set-point. This could cause the cell to rupture due to the expansion of ice. The cutout uses a thermistor probe sensor and disengages the refrigeration compressor. If the probe is replaced, the cutout board must be recalibrated. (See Section 12). The user may set the cutout temperature. A typical set-point is from –0.3 to –0.5°C. If undesired trips occur, the temperature may be reduced. The adjustment range is ±1.27°C from 0°C in 0.01°C increments.

The triple point of water cutout engages for three reasons: 1) the controller does not send a watch dog signal to the cutout board (controller lockup), 2) the thermistor sensor is disconnected or opens, or 3) the bath goes below the cutout set-point. (This could be if the temperature controller set-point is too low or if the heater fails.) When the TPW cutout is triggered, the display alternately flashes tP-cto and the current bath temperature. The serial port outputs “TPW Cutout” every three seconds. Pressing any button causes the cutout error message to stop being output until another TPW cutout error has occurred. Each time the cutout is tripped, the bath temperature set-point automatically increases in 0.5°C increments until the set-point has reached a maximum of 25°C.

The parameter is indicated by,

원문: Fluke Calibration 7312 설명서 · 제조사 원문 자료입니다. 사양은 제조사 사정에 따라 변경될 수 있습니다.

tP CO	*Triple point of water cutout parameter*

Press the "SET" button to access the activation selection. Press the "UP" or "DOWN" button to turn the cutout on or off and then press the "SET" button. Normally the cutout is ON.

Press the "EXIT" button to return to the operating parameters menu.

tP SP	*Triple point of water set-point selection parameter*

Press the "SET" button to access the parameter setting.

C -0.30	*Cutout temperature in degrees C or F*

To change the cutout temperature, use the "UP" or "DOWN" button. To accept the new cutout set-point, press the "SET" button.

Press the "EXIT" button to return to the operating parameters menu.

9.12 Serial Interface Parameters

The serial RS-232 interface parameters menu is indicated by,

SErIAL	*Serial RS-232 interface parameters menu*

The serial interface parameters menu contains parameters, which determine the operation of the serial interface. The parameters in the menu are – BAUD rate, sample period, duplex mode, and linefeed.

9.12.1 BAUD Rate

The BAUD rate is the first parameter in the menu. The BAUD rate setting determines the serial communications transmission rate.

The BAUD rate parameter is indicated by,

BAUd	*Serial BAUD rate parameter*

Press the "SET" button to choose to set the BAUD rate. The current BAUD rate value is displayed.

1200 b	*Current BAUD rate*

The BAUD rate of the bath serial communications may be programmed to 300, 600, 1200, or 2400 BAUD. Use the "UP" or "DOWN" button to change the BAUD rate value.

2400 b	*New BAUD rate*

원문: Fluke Calibration 7312 설명서 · 제조사 원문 자료입니다. 사양은 제조사 사정에 따라 변경될 수 있습니다.

Press the “SET” button to set the BAUD rate to the new value or the “EXIT” button to abort the operation and skip to the next parameter in the menu.

9.12.2 Sample Period

The sample period is the next parameter in the serial interface parameter menu. The sample period is the time period in seconds between temperature measurements transmitted from the serial interface. If the sample rate is set to 5, the bath transmits the current measurement over the serial interface approximately every five seconds. The automatic sampling is disabled with a sample period of 0. The sample period is indicated by,

SAMPLE	*Serial sample period parameter*

Press the “SET” button to choose to set the sample period. The current sample period value is displayed.

SA = 1	*Current sample period (seconds)*

Adjust the value with the “UP” or “DOWN” button and then use the “SET” button to set the sample rate to the displayed value.

SA = 60	*New sample period*

9.12.3 Duplex Mode

The next parameter is the duplex mode. The duplex mode may be set to full duplex or half duplex. With full duplex any commands received by the bath via the serial interface are immediately echoed or transmitted back to the device of origin. With half duplex the commands are executed but not echoed. The duplex mode parameter is indicated by,

DUPL	*Serial duplex mode parameter*

Press the “SET” button to access the mode setting

DUP=FULL	*Current duplex mode setting*

The mode may be changed using the “UP” or “DOWN” button and then pressing the “SET” button.

DUP=HALF	*New duplex mode setting*

9.12.4 Linefeed

The final parameter in the serial interface menu is the linefeed mode. This parameter enables (on) or disables (off) transmission of a linefeed character (LF,

원문: Fluke Calibration 7312 설명서 · 제조사 원문 자료입니다. 사양은 제조사 사정에 따라 변경될 수 있습니다.

ASCII 10) after transmission of any carriage-return. The linefeed parameter is indicated by,

LF	*Serial linefeed parameter*

Press the "SET" button to access the linefeed parameter.

LF=On	*Current linefeed setting*

The mode may be changed using the "UP" or "DOWN" button and then pressing the "SET" button.

LF=OFF	*New linefeed setting*

9.13 IEEE-488 Parameters

Baths may optionally be fitted with an IEEE-488 GPIB interface. In this case the user may set the interface address and the transmission termination character within the IEEE-488 parameter menu. This menu does not appear on baths not fitted with the interface. The menu is indicated by,

IEEE	*IEEE-488 parameters menu*

Press the "SET" button to enter the menu.

9.13.1 IEEE-488 Address

IEEE-488 interface must be configured to use the same address as the external communicating device. The address is indicated by,

AddrESS	*IEEE-488 interface address*

Press the "SET" button to access the address setting.

Add=22	*Current IEEE-488 interface address*

Adjust the value with the "UP" or "DOWN" button and then use the "SET" button to set the address to the displayed value.

Add=15	*New IEEE-488 interface address*

9.13.2 Transmission Termination

The transmission termination character can be set to carriage return only, linefeed only, or carriage return and linefeed. Regardless of the option selected, the

원문: Fluke Calibration 7312 설명서 · 제조사 원문 자료입니다. 사양은 제조사 사정에 따라 변경될 수 있습니다.

instrument interprets either a carriage return or a linefeed as a command termination during reception.

The termination parameter is indicated with,

EOS	*IEEE-488 termination*

Press the “SET” button to access the termination setting.

EOS=Cr	*Present IEEE-488 termination*

Use the “UP” or “DOWN” button to change the selection.

EOS=LF	*New termination selection*

Use the “SET” button to save the new selection.

9.14 Calibration Parameters

The operator of the bath controller has access to a number of the bath calibration constants namely CTO, H, and L. These values are set at the factory and must not be altered. The correct values are important to the accuracy and proper and safe operation of the bath. These parameters should not be adjusted except in the event the controller’s memory fails. The user may then restore these values to the factory settings. A list of these constants and their settings are supplied to the user on the Report of Test with the manual.

CAUTION: *DO NOT change the values of the bath calibration constants from the factory set values. The correct setting of these parameters is important to the safety and proper operation of the bath.*

The calibration parameters menu is indicated by,

CAL	*Calibration parameters menu*

Press the “SET” button five times to enter the menu.

9.14.1 CTO

Parameter CTO sets the calibration of the over-temperature cutout. This parameter is not adjustable by software but is adjusted with an internal potentiometer. For the 7312 bath this parameter should read 160.

9.14.2 H and L

These parameters set the upper and lower set-point limits of the bath. DO NOT change the values of these parameters from the factory set values. To do so may

원문: Fluke Calibration 7312 설명서 · 제조사 원문 자료입니다. 사양은 제조사 사정에 따라 변경될 수 있습니다.

present danger of the bath exceeding its temperature range causing damage or fire.

원문: Fluke Calibration 7312 설명서 · 제조사 원문 자료입니다. 사양은 제조사 사정에 따라 변경될 수 있습니다.

10 Digital Communication Interface

The 7312 bath is capable of communicating with and being controlled by other equipment through the digital interface. Two types of digital interface are available—the RS-232 serial interface, which is standard, and the IEEE-488 GPIB interface which is optional.

With a digital interface the bath may be connected to a computer or other equipment. This allows the user to set the bath temperature, monitor the temperature, and access any of the other controller functions, all using remote communications equipment. In addition the cooling may be controlled using the interface. To control the cooling with the interface the cooling power switch must be OFF.

10.1 Serial Communications

The RS-232 serial interface allows serial digital communications over fairly long distances (15.24 meters). With the serial interface the user may access any of the functions, parameters and settings discussed in Section 10, Controller Operation with the exception of the BAUD rate setting. The serial interface operates with eight data bits, one stop bit, and no parity.

10.1.1 Wiring

The serial communications cable attaches to the bath through the DB-9 connector at the back of the instrument. Figure 9 shows the pin-out of this connector

원문: Fluke Calibration 7312 설명서 · 제조사 원문 자료입니다. 사양은 제조사 사정에 따라 변경될 수 있습니다.

and suggested cable wiring. To eliminate noise, the serial cable should be shielded with low resistance between the connector (DB-9) and the shield.

RS-232 Cable Wiring for IBM PC and Compatibles

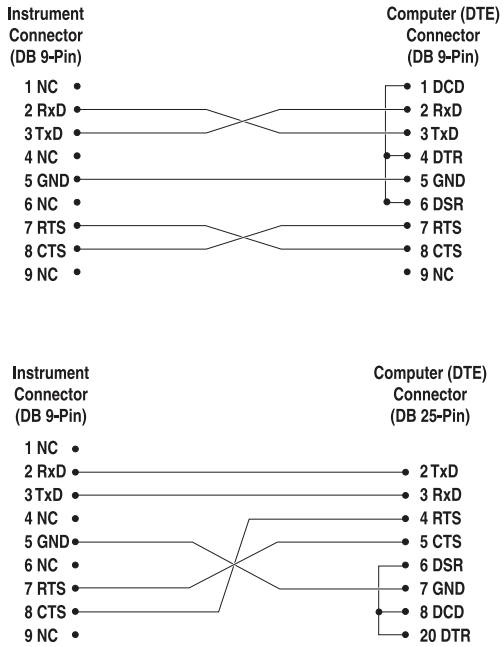

Figure 9 *Serial Communications Cable Wiring*

10.1.2 Setup

Before operation, the serial interface of the bath must first be set up by programming the BAUD rate and other configuration parameters. These parameters are programmed within the serial interface menu.

To enter the serial parameter programming mode first, press the "EXIT" button while pressing the "SET" button and release to enter the secondary menu. Press the "SET" button repeatedly until the display reads "ProbE". This is the menu selection. Press the "UP" button repeatedly until the serial interface menu is indicated with "SErIAL". Finally press the "SET" button to enter the serial parameter menu. The serial interface parameter menu contains the BAUD rate, the sample rate, the duplex mode, and the linefeed parameter.

10.1.2.1 BAUD Rate

The BAUD rate is the first parameter in the menu. The display prompts with the BAUD rate parameter by showing "BAUd". Press the "SET" button to choose to set the BAUD rate. The current BAUD rate value is displayed. The

원문: Fluke Calibration 7312 설명서 · 제조사 원문 자료입니다. 사양은 제조사 사정에 따라 변경될 수 있습니다.

BAUD rate of the bath may be programmed to 300, 600, 1200, or 2400 BAUD. The BAUD rate is pre-programmed to 2400 BAUD. Use “UP” or “DOWN” to change the BAUD rate value. Press the “SET” button to set the BAUD to the new value or the “EXIT” button to abort the operation and skip to the next parameter in the menu.

10.1.2.2 Sample Period

The sample period is the next parameter in the menu and prompted with “SAMPLE”. The sample period is the time period, in seconds, between temperature measurements transmitted from the serial interface. If the sample rate is set to 5, the bath transmits the current measurement over the serial interface approximately every five seconds. The automatic sampling is disabled with a sample period of 0. Press the “SET” button to choose to set the sample period. Adjust the period with the “UP” or “DOWN” button and then use the “SET” to set the sample rate to the displayed value.

10.1.2.3 Duplex Mode

The next parameter is the duplex mode indicated with “dUPL”. The duplex mode may be set to half duplex (“HALF”) or full duplex (“FULL”). With full duplex any commands received by the bath via the serial interface are immediately echoed or transmitted back to the device of origin. With half duplex the commands are executed but not echoed. The default setting is full duplex. The mode may be changed using “UP” or “DOWN” and pressing “SET”.

10.1.2.4 Linefeed

The final parameter in the serial interface menu is the linefeed mode. This parameter enables (“On”) or disables (“OFF”) transmission of a linefeed character (LF, ASCII 10) after transmission of any carriage-return. The default setting is with linefeed on. The mode may be changed using “UP” or “DOWN” and pressing “SET”.

10.1.3 Serial Operation

Once the cable has been attached and the interface set up properly the controller immediately begins transmitting temperature readings at the programmed rate. The set-point and other commands may be sent to the bath via the serial interface to set the bath and view or program the various parameters. The interface commands are discussed in Section 11.3, Interface Commands.

10.2 IEEE-488 Communication (optional)

The IEEE-488 interface is available as an option. Baths supplied with this option may be connected to a GPIB type communication bus, which allows many instruments to be connected and controlled simultaneously. To eliminate noise, the GPIB cable should be shielded.

원문: Fluke Calibration 7312 설명서 · 제조사 원문 자료입니다. 사양은 제조사 사정에 따라 변경될 수 있습니다.

10.2.1 Setup

To use the IEEE-488 interface connect an IEEE-488 standard cable to the back of the bath, set the device address, and set the transmission termination character.

To enter the IEEE-488 parameter programming menu, press the "EXIT" and the "SET" button simultaneously and then release to enter the secondary menu. Press the "SET" button repeatedly until the display reaches "PrObE". Press the "UP" button repeatedly until the IEEE-488 interface menu is indicated with "IEEE". Press the "SET" button to enter the IEEE-488 parameter menu.

10.2.1.1 IEEE-488 Address

The IEEE-488 address is prompted with "AddrESS". Press the "SET" button to program the address. The default address is 22. If necessary, change the device address of the bath to match the address used by the communication equipment. To change the device address, press the "UP" or DOWN" button and then the "SET" button.

10.2.1.2 Transmission Termination

The IEEE-488 transmission termination is prompted with "EOS". Press the "SET" button to access the termination character. The present setting is displayed. Press the "UP" or "DOWN" button to change the setting. Press the "SET" button to save the new selection.

10.2.2 IEEE-488 Operation

Commands may now be sent via IEEE-488 interface to read or set the temperature or access other controller functions. All commands are ASCII character strings and are terminated with a carriage-return (CR, ASCII 13). Interface commands are listed below.

10.3 Interface Commands

The various commands for accessing the bath controller functions via the digital interfaces are listed in this section (see Table 4). These commands are used with both the RS-232 serial interface and the IEEE-488 GPIB interface. In either case the commands are terminated with a carriage-return character. The interface makes no distinction between upper and lower case letters, hence either may be used. Commands may be abbreviated to the minimum number of letters, which determines a unique command. A command may be used to either set a parameter or display a parameter depending on whether or not a value is sent with the command following a "=" character. For example, an "s"<cr> returns the current set-point and an "s=50.00"<cr> sets the set-point to 50.00 degrees.

In the following list of commands, characters or date within brackets, "[" and "]", are optional. A slash, "/", denotes alternate characters or data. Numeric

원문: Fluke Calibration 7312 설명서 · 제조사 원문 자료입니다. 사양은 제조사 사정에 따라 변경될 수 있습니다.

Table 4 *Interface Command Summary.*

Command Description	Command Format	Command Example	Returned	Returned Example	Acceptable Values
Display Temperature					
Read current set-point	s[etpoint]	s	set: 9999.99 {C or F}	set: 100.000 C	
Set current set-point to n	s[etpoint]=n	s=100			Instrument Range
Read vernier	v[ernier]	v	v: 9.99999	v: 0.00000	
Set vernier to n	v[ernier]=n	v=.00001			Depends on Configuration
Read temperature	t[emperature]	t	t: 9999.99 {C or F}	t: 55.69 C	
Read temperature units	u[nits]	u	u: x	u: c	
Set temperature units:	**u[nits]=c/f**				C or F
Set temperature units to Celsius	u[nits]=c	u=c			
Set temperature units to Fahrenheit	u[nits]=f	u=f			
Secondary Menu					
Read proportional band setting	pr[op-band]	pr	pr: 999.9	pr: 15.9	
Set proportional band to *n*	pr[op-band]=n	pr=8.83			Depends on Configuration
Read cut-out setting	c[utout]	c	c: 9999 {x},{xxx}	c: 110 C, in	
Set cut-out setting:	**c[utout]=n/r[eset]**				
Set cut-out to *n* degrees	c[utout]=n	c=110			Temperature Range
Reset cut-out now	c[utout]=r[eset]	c=r			
Read heater power (duty cycle)	po[wer]	po	po: 9999	po: 1	
Configuration Menu					
Probe Menu					
Read D0 calibration parameter	*d0	*d0	d0: 999.9999	d0: -25.2290	
Set D0 calibration parameter to *n*	*d0=n	*d0=-25.2290			-999.9999 to 999.9999
Read DG calibration parameter	*dg	*dg	dg: 999.9999	dg:186.9740	
Set DG calibration parameter to *n*	*dg=n	*dg=186.9740			-999.9999 to 999.9999
Operating Parameters Menu					
Read cut-out mode	cm[ode]	cm	cm: {xxxx}	cm: AUTO	
Set cut-out mode:	**cm[ode]=r[eset]/a[uto]**				RESET or AUTO
Set cut-out to be reset manually	cm[ode]=r[eset]	cm=r			

원문: Fluke Calibration 7312 설명서 · 제조사 원문 자료입니다. 사양은 제조사 사정에 따라 변경될 수 있습니다.

Interface Command Summary continued

Command Description	Command Format	Command Example	Returned	Returned Example	Acceptable Values
Set cut-out to be reset automatically	cm[ode]=a[uto]	cm=a			
Read water triple point	tpco	tpco	tpco:{ON or OFF}	tpco=ON	
Set water triple point	tpco=ON/OFF	tpco=ON			ON or OFF
Read water triple point cutout set-point	tpsp=*n*	tpsp	tpsp=99.99C	tpsp=–0.31C	
Set water triple point cutout set-point	tpsp=*n*	tpsp=–0.33			±1.27°C (±2.28°F)
Serial Interface Menu					
Read serial sample setting	sa[mple]	sa	sa: 9	sa: 1	
Set serial sampling setting to *n* seconds	sa[mple]=n	sa=0			0 to 4000
Set serial duplex mode:	**du[plex]=f[ull]/h[alf]**				FULL or HALF
Set serial duplex mode to full	du[plex]=f[ull]	du=f			
Set serial duplex mode to half	du[plex]=h[alf]	du=h			
Set serial linefeed mode:	**lf[eed]=on/of[f]**				ON or OFF
Set serial linefeed mode to on	lf[eed]=on	lf=on			
Set serial linefeed mode to off	lf[eed]=of[f]	lf=of			
Calibration Menu					
Read low set-point limit value	*tl[ow]	*tl	tl: 999	tl: –80	
Set low set-point limit to *n*	*tl[ow]=n	*tl=-80			–5 to 25°C
Read high set-point limit value	*th[igh]	*th	th: 999	th: 205	
Set high set-point limit to *n*	*th[igh]=n	*th=205			25 to 110°C
Miscellaneous (not on menus)					
Read firmware version number	*ver[sion]	*ver	ver.9999,9.99	ver.2100,3.56	
Read structure of all commands	h[elp]	h	list of commands		
Read Refrigeration	f2	f2	f2:9	f2:0	
Set Refrigeration	**f2=1/0**				**0 or 1**
Set Refrigeration to on	f2=*n*	f2=1			
Set Refrigeration to off	f2=*n*	f2=0			
Legend:	[] Optional Command data {} Returns either information n Numeric data supplied by user 9 Numeric data returned to user x Character data returned to user				
Note:	When DUPLEX is set to FULL and a command is sent to READ, the command is returned followed by a carriage return and linefeed. Then the value is returned as indicated in the RETURNED column.				

원문: Fluke Calibration 7312 설명서 · 제조사 원문 자료입니다. 사양은 제조사 사정에 따라 변경될 수 있습니다.

data, denoted by “n”, may be entered in decimal or exponential notation. Characters are shown in lower case although upper case may be used. Spaces may be added within command strings and are simply ignored. Backspace (BS, ASCII 8) may be used to erase the previous character. A terminating CR is implied with all commands.

10.4 Power Control Functions

The digital interface is capable of controlling the cooling function so that the instrument can be remotely operate at any temperature within the range of the bath. To allow the interface to control the cooling, disable the front panel controls by switching the refrigeration switch to OFF. Otherwise, the interface would not be able to switch these functions off.

To control the refrigeration power with the digital interface, the front panel refrigeration switch must be off. The refrigeration power function is controlled with the “F2” command. Setting the “F2” value to 0 turns the refrigeration off and setting the “F2” value to 1 turns the refrigeration on. “F2” alone returns 0 or 1 showing the state of the refrigeration power control as shown in the following table.

Function	Command	0	1
Refrigeration	F2	off	on

원문: Fluke Calibration 7312 설명서 · 제조사 원문 자료입니다. 사양은 제조사 사정에 따라 변경될 수 있습니다.

11 Calibration Procedure

In some instances the user may want to calibrate the bath to improve the temperature set-point accuracy. Calibration is done by adjusting the controller probe calibration constants DO and DG so that the temperature of the bath as measured with a standard thermometer agrees more closely with the bath set-point. The thermometer used must be able to measure the bath fluid temperature with higher accuracy than the desired accuracy of the bath. By using a good thermometer and by carefully following the procedure, the bath can be calibrated to an accuracy of better than 0.1°C over a range of 50 degrees.

11.1 Calibration Points—2 Point Calibration

In calibrating the bath DO and DG are adjusted to minimize the set-point error at each of two different bath temperatures. Any two reasonably separated bath temperatures may be used for the calibration however best results are obtained when using bath temperatures which are just within the most useful operating range of the bath. The farther apart the calibration temperatures, the larger the calibrated temperature range but the calibration error is also greater over the range. For instance, if 20°C and 80°C are chosen as the calibration temperatures, the bath may achieve an accuracy of say ±0.2°C over the range 20 to 80°C. Choosing 30°C and 70°C may allow the bath to have a better accuracy of maybe ±0.05°C over the range 30 to 70°C but outside the range the accuracy may be only ±0.5°C.

11.2 Measuring the Set-point Error

The first step in the calibration procedure is to measure the temperature errors (including sign) at the two calibration temperatures. First, set the bath to the lower set-point, t_L. Wait for the bath to reach the set-point and allow 15 minutes to stabilize at that temperature. Check the bath stability with the thermometer. When both the bath and the thermometer have stabilized, measure the bath temperature with the thermometer and compute the temperature error, err_L, which is the actual bath temperature minus the set-point temperature. For example, if the bath is set for a lower set-point of, t_L=20°C and the bath reaches a measured temperature of 19.7°C then the error is –0.3°C.

Next, set the bath for the upper set-point, t_H, and after stabilizing measure the bath temperature and compute the error, err_H. For example, suppose the bath was set for 80°C and the thermometer measured 80.1°C giving an error of +0.1°C.

11.3 Computing DO and DG

Before computing the new values for DO and DG the current values must be known. The values may be found by either accessing the probe calibration menu from the controller panel or by inquiring through the digital interface.

원문: Fluke Calibration 7312 설명서 · 제조사 원문 자료입니다. 사양은 제조사 사정에 따라 변경될 수 있습니다.

The user should keep a record of these values in case they may need to be restored in the future. The new values DO' and DG' are computed by entering the old values for DO and DG, the calibration temperature set-points, t_L and t_H, and the temperature errors, err_L and err_H, into the following equations,

$$D0' = \frac{err_L(t_H - D0) - err_H(t_L - D0)}{t_H - t_L} + D0$$

$$DG' = \left[\frac{err_H - err_L}{t_H - t_L} + 1\right] DG$$

For example, if DO and DG were previously set for –25.229 and 186.9740 respectively and the data for t_L, t_H, err_L, and err_H were as given above then the new values D0′ and DG′ would be computed as –25.831 and 188.220 respectively. Program the new values D0 and DG into the controller. The new constants are used the next time the bath temperature is set. Check the calibration by setting the temperature to t_L and t_H and measuring the errors again. If desired, the calibration procedure may be repeated again to further improve the accuracy.

11.4 Calibration Example

The bath is to be used between 25 and 75°C and it is desired to calibrate the bath as accurately as possible for operation within this range. The current values for D0 and DG are –25.229 and 186.974 respectively. The calibration points are chosen to be 25.00 and 75.00°C. The measured bath temperatures are 24.869 and 74.901°C respectively. Refer to Figure 10 for applying the equations to the example data and computing the new probe constants.

11.5 Single Point Calibration

When calibrating the bath for applications emphasizing a single temperature, a single point calibration can be quicker, easier and more accurate. These applications include maintenance of a triple point of water cell near zero degrees Celsius or for the gallium point near 30°C. An adjustment of only the D0 calibration constant is made in this process. The advantage of calibration is to have the bath set-point temperature more closely reflect the desired bath temperature. While this procedure improves the accuracy at a specific set-point, the results may not be accurate enough alone to make the baths final temperature adjustment. For example, for the maintenance of a triple point of water cell, the bath temperature must be known to within one thousandth of a degree Celsius. The calibration of the bath is not intended to get that close. Final adjustments

원문: Fluke Calibration 7312 설명서 · 제조사 원문 자료입니다. 사양은 제조사 사정에 따라 변경될 수 있습니다.

D0 = -25.229

DG = 0.0028530

t_L = 25.00°C

measured t = 24.869°C

t_H = 75.00°C

measured t = 74.901°C

Compute errors,

err_L = 24.869 – 25.00°C = –0.131°C

err_H = 74.901 – 75.00°C = –0.099°C

Compute D0,

$$D0' = \frac{(-0.131)(75.0-(-25.229))-(-0.099)(25.0-(-25.229))}{75.0-25.0}+(-25.229) = -25.392$$

Compute DG,

$$DG' = \left[\frac{(-0.099)-(-0.131)}{75.0-25.0}+1\right]0.0028530 = 0.0028548$$

Figure 10 *Sample Calibration Computations*

must be made using a thermometer and readout capable of making measurements to one thousandth of a degree.

11.6 Measuring the Set-point Error

The first step in this procedure is to measure the set-point error (including the sign) at the desired temperature. Set the bath to the desired set-point, for example 0.008°C for the triple point of water cell maintenance. Verify that the vernier is set at 0. Wait for the bath to reach that temperature and allow 30 minutes for the bath to stabilize at that temperature. Check the bath stability with the thermometer. When both the bath and the thermometer have stabilized, measure the bath temperature with the thermometer and compute the temperature error, which is the set-point temperature minus the actual bath temperature.

Error = $T_{sp} - T_{actual}$

원문: Fluke Calibration 7312 설명서 · 제조사 원문 자료입니다. 사양은 제조사 사정에 따라 변경될 수 있습니다.

Example:

Actual temperature = +0.132°C

Set point temperature = +0.008°C

error = +0.008– (+0.132) = -0.124 (including sign)

11.7 Computing D0

Before computing the new values for D0, the current value must be known. The value may be found by either accessing the probe calibration menu from the controller panel or by inquiring through the digital interface. The user should keep a record of this value in case it may need to be restored in the future. The new value D0' is computed by subtracting the temperature error from the old value for D0 as follows.

D0′ = D0 – error

Example:

Old D0 = -25.438

error = -0.124°C

D0′ = –25.438 – (–0.224) = –25.662

Enter the new D0 value into the controller and press the "SET" button. Wait for the temperature to stabilize and measure the temperature again. If desired, the calibration procedure may be repeated to further improve the accuracy.

11.8 Calibrating the Triple Point of Water Cutout

The under temperature cutout is provided to protect the triple point of water cell in case there is a temperature controller or sensor failure that would cause the bath to cool rapidly below the set-point temperature. Such a failure could cause the cell to rupture due to rapid expansion of the ice inside it. The cutout deactivates the refrigeration thereby preventing the problem.

CAUTION: *Only trained personnel should operate calibration equipment.*

The cutout is calibrated at the triple point temperature at the factory. It may need to be recalibrated from time to time if there is drift in the cutout temperature or if the cutout probe has been replaced. The actual cutout temperature may be observed by setting the bath to a temperature well below the cutout set-point and monitoring the bath temperature until the cutout activates. When the display flashes tP-c-out, note the temperature. If the error is less than 0.5°C, it may be compensated for by resetting the water triple point cutout. For greater errors it may be best to recalibrate the cutout.

원문: Fluke Calibration 7312 설명서 · 제조사 원문 자료입니다. 사양은 제조사 사정에 따라 변경될 수 있습니다.

The cutout is calibrated by adjusting a potentiometer inside the unit while the bath is at the triple point maintenance temperature. The bath temperature should be known to within ±0.05°C. A DVM capable of measuring accurately to 10mV is required.

To access the cutout circuit board, the front panel must be removed. Be sure to disconnect the power to the unit before beginning. It is best to move quickly to avoid much bath temperature change. Begin by removing the 4 screws attaching the sloping controller panel. Lift up the controller panel to access the fasteners attaching the front sheet metal panel. Remove the two fasteners located at the top left and right corners of the panel. The bottom of the panel is retained by a screw on either side of the panel that is in a key-hole shaped slot. Lift up the panel and wiggle slightly so that the screw heads come out through the larger portion of the slot. The bottom screws are not to be removed. Once the panel is removed, set it aside and temporarily replace the controller panel reinstalling the screws to hold it in place.

Reestablish the power connection to the bath and allow the bath to regain stable control at the required set-point. This procedure takes 15 minutes or longer depending on how long the bath has been off and how far it has drifted off temperature. Be aware that the bath has a low voltage line monitor that activates when the power is disconnected. Several minutes are required before the unit is permitted to turn on. Note the amber light on the back of the unit.

WARNING: *Shock hazard! High Voltage power is accessible.*

Identify the cutout PC board on the left side of a sheet metal shelf below the temperature controller boards. Locate on the cutout board the two test points TP1 and TP2 and attach the DVM.

In order to prevent the cutout from activating during adjustment it must be turned off in the controller menu. To disable the low temperature cutout, access the operating parameters menu. Follow the instructions in Section 9.11.2 and set the triple point cutout (tP CO) to OFF toggling with either the up or down keys. Set the water triple point cutout to 0.01°C. With the bath controlling at 0°C to 0.01°C, adjust VR1 on the board until the voltage reads 0 volts. After the adjustment, return the cutout to the ON condition and set the water triple point cutout set-point to –0.3°C.

원문: Fluke Calibration 7312 설명서 · 제조사 원문 자료입니다. 사양은 제조사 사정에 따라 변경될 수 있습니다.

12 Charging Instructions

The 7312 uses R-134a with a polyolester oil. Care must be taken to avoid contamination from other types of refrigerants and oils.

12.1 Leak Testing

Leak testing should be done with equipment designed for use with R-134a. Bubble, electronic halogen detector, or ultra-sonic leak testing may be viable in some instances.

12.2 Evacuation

DO NOT leave the system open for more than 15 minutes. Polyolester oils are very hygroscopic. Evacuate the system to a minimum of 200 microns. Evacuate from both high and low sides of the system. Schrader valves provide access to the system.

12.3 Charging

After evacuation, charge the system with 160 grams of R-134a. Set the suction pressure to 8-10 psig for operation.

NOTE: *A fan must be placed in front of the condenser if the unit is operated with the side panels removed. The unit requires the side panels to be installed for proper airflow across the condenser.*

13 Maintenance

- A battery is used to maintain operating parameters in the unit. All operating parameters, including calibration parameters should be checked on a regular basis to insure accuracy and proper operation of the instrument. See the troubleshooting section for the procedure on checking the status of the battery.
- The calibration instrument has been designed with the utmost care. Ease of operation and simplicity of maintenance have been a central theme in the product development. Therefore, with proper care the instrument should require very little maintenance. Avoid operating the instrument in dirty or dusty environments.
- If the outside of the bath becomes soiled, it may be wiped clean with a damp cloth and mild detergent. Do not use harsh chemicals on the surface, which may damage the paint.
- Periodically check the fluid level in the bath to ensure that the level has not dropped. A drop in the fluid level affects the stability of the bath. Changes in fluid level are dependent upon several factors specific to the conditions in which the equipment is used. A schedule cannot be outlined to meet each set of conditions. Therefore, the bath should be checked weekly and adjustments made as required.
- Heat transfer medium lifetime is dependent upon the type of medium and the conditions of use. The fluid should be checked at least every month for the first year and regularly thereafter. This fluid check provides a baseline for knowledge of bath operation with clean, usable fluid. Once some fluids have become compromised, the break down can occur rapidly. Particular attention should be paid to the viscosity of the fluid. A significant change in the viscosity can indicate that the fluid is contaminated, being used outside of its temperature limits, contains ice particles, or is close to a chemical breakdown. Once data has been gathered, a specific maintenance schedule can be outlined for the instrument. Refer to Section 9, General Operation, for more information about the different types of fluids used in calibration baths.
- Depending on the cleanliness of the environment, the internal parts (parts behind the front cover only) of the cold bath should be cleaned and/or checked at least every month for dust and dirt. Particular attention should be paid to the condensing coil fins. The fins should be vacuumed or brushed free of dust and dirt on a regular basis. Dust and dirt inhibit the operation of the condensing coil and thus compromise the performance and lifetime of the cooling system.
- If a hazardous material is split on or inside the equipment, the user is responsible for taking the appropriate decontamination steps as outlined by the national safety council with respect to the material. MSDS sheets applicable to all fluids used in the baths should be kept in close proximity to the instrument.

원문: Fluke Calibration 7312 설명서 · 제조사 원문 자료입니다. 사양은 제조사 사정에 따라 변경될 수 있습니다.

- If the mains supply cord becomes damaged, replace it with a cord with the appropriate gauge wire for the current of the bath. If there are any questions, call an Authorized Service Center for more information.
- Before using any cleaning or decontamination method except those recommended by Hart, users should check with an Authorized Service Center to be sure that the proposed method does not damage the equipment.
- If the instrument is used in a manner not in accordance with the equipment design, the operation of the bath may be impaired or safety hazards may arise.
- The over-temperature cutout should be checked every 6 months to see that it is working properly. In order to check the user selected cutout, follow the controller directions (Section 10.2) for setting the cutout. Both the manual and the auto reset option of the cutout should be checked. Set the bath temperature higher than the cutout. Check to see if the display flashes cutout and if the temperature is decreasing. **Note:** When checking the over-temperature cutout, be sure that the temperature limits of the bath fluid are not exceeded. Exceeding the temperature limits of the bath fluid could cause harm to the operator, lab, and instrument.

원문: Fluke Calibration 7312 설명서 · 제조사 원문 자료입니다. 사양은 제조사 사정에 따라 변경될 수 있습니다.

14 Troubleshooting

This section contains information on troubleshooting, CE Comments, and a wiring diagram. This information pertains to a number of bath models and certain specifics may not pertain to your model.

14.1 Troubleshooting

In the event that the instrument appears to function abnormally, this section may help to find and solve the problem. Several possible problem conditions are described along with likely causes and solutions. If a problem arises, please read this section carefully and attempt to understand and solve the problem. If the probe seems faulty of the problem cannot otherwise be solved, contact an Authorized Service Center (see Section 1.3) for assistance. Be sure to have the model number, serial number, and voltage of your instrument available.

Problem	Causes and Solutions
The bath does not turn on and the display remains blank	If a fault condition exists upon application of power, the bath will not energize. The bath needs to be plugged in to the line voltage for at least 2 minutes before turning power on. This is only necessary for the first time that the bath is energized or when it is moved from one location to another. If a high or low voltage condition exists for longer than 5 seconds, the compressor is de-energized and the “Mains Out of Range” light on the back panel illuminates indicating a fault condition. Re-energization is automatic upon correction of the fault condition and after a delay cycle of about 2 minutes. High and low voltage protection limits at 115 VAC: Voltage Cutout: ±12.5% (101 – 129 VAC) Voltage Cutin: ±7.5% (106 – 124 VAC) High and low voltage protection limits at 230 VAC: Voltage Cutout: ±12.5% (203 – 257 VAC) Voltage Cutin: ±7.5% (213 – 247 VAC) See the **Caution** in the front of this manual for additional information. **Testing the Line Voltage** – If the power line voltage is too low (90% of the compressor’s rated voltage), the compressor could be damaged. Place a DVM in the supply line on the wall that feeds the bath. Measure the line voltage under load (with the bath on). If the line voltage is low or marginal, disconnect any other devices that are using the same line. Alternately, move the bath to a location where the supply voltage is good. If none of these are possible, contact an electrician to re-route the correct power. If necessary, you can inspect the operation of the line monitor by opening the electronics cover. See the **Caution** at the front of this manual for a summary of the ICM491 operation. Hart does not recommend adjustment of the operating voltage in order to use the instrument. Instead, an electrician should be consulted to alleviate the problem with the power source.

원문: Fluke Calibration 7312 설명서 · 제조사 원문 자료입니다. 사양은 제조사 사정에 따라 변경될 수 있습니다.

Problem	Causes and Solutions
The heater indicator LED stays red but the temperature does not increase	If the display does not show "cutout" and shows the correct bath temperature, consider the following possibilities: **No heating.** This is caused by blown heater fuses and/or burned out heaters. Check the heater fuses to make sure that they are still good. Access the heater fuses by removing the front panel under the display electronics. If they are blown, and continue to blow when replaced, the heaters may be shorted. If you suspect that the heaters are shorted or burned out, contact an Authorized Service for assistance.
The controller display flashes "CUTOUT" and the heater does not operate	If the display flashes "cut-out" alternately with the correct process temperature, check the following: **Wrong cutout setting.** The cutout disconnects power to the heaters when the bath temperature exceeds the cutout set-point. This causes the bath temperature to drop back down to a safe value. If the cutout mode is set to "AUTO", the heater switches back on when the temperature drops. If the mode is set to "RESET", the heater only comes on again when the temperature is reduced and when the cutout is manually reset by the operator. (Refer to Section 10.8.) Check that the cutout set-point is adjusted to 10 or 20°C above the desired maximum bath operating temperature and that the cutout mode is set as desired. **Continuous cutout.** If the cutout activates when the bath temperature is well below the cutout set-point or the cutout does not reset when the bath temperature drops and it is manually reset, the cutout circuitry may be faulty. Try performing the Factory Reset Sequence explained below. **Factory Reset Sequence** - Hold the "SET" and "EXIT" keys down at the same time while powering up the unit. The display shows "-init", the model number, and the firmware version. Each of the controller parameters and calibration constants must be re-programmed. The values can be found on the Report of Test that was shipped with the instrument.
The display flashes "CUTOUT" alternately with an incorrect process temperature	**Low battery.** A problem could exist with the memory back-up battery. If the battery voltage is insufficient to maintain the memory, data may become scrambled causing problems. A nearby large static discharge may also affect data in memory. Access the battery by removing the L-shaped panel covering the display electronics. **Corrupt controller memory.** If the problem reoccurs after the battery is replaced, initialize the memory by performing a Factory Reset Sequence (described in a previous solution).
The controller displays the wrong temperature and the bath continually heats or cools regardless of the set-point value	**Defective control probe.** The bath control probe may be disconnected, burned out, or shorted. Check first that the probe is connected properly to the connector, J2, of the analog board. The probe may be checked with an ohmmeter to see if it is open or shorted. The probe is a platinum 4-wire Din 43760 type. The probe connector resistance should read 9.4K ohms between pins 1 and 3, 3.2 K ohms between pins 3 and 4, 12.4K ohms between pins 1 and 4, and no current on pin 2. **Corrupt controller memory.** Initialize the memory by performing a Factory Reset Sequence (described in a previous solution).

원문: Fluke Calibration 7312 설명서 · 제조사 원문 자료입니다. 사양은 제조사 사정에 따라 변경될 수 있습니다.

Problem	Causes and Solutions
The controller controls or attempts to control at an inaccurate temperature	If the controller appears to operate normally except that the bath's temperature does not agree with the temperature measured by the user's reference thermometer to within the specified accuracy, consider the following: **Erroneous parameters.** Check that the calibration parameters are all correct according to the Report of Test. If not, reprogram the constants. If the controller does not keep the correct parameters, the memory backup battery may be weak causing errors in data. See "Low Battery" in a previous solution. **Poor uniformity.** There may be an actual difference between the bath's control probe and the reference thermometer due to excess gradients in the bath. Check that the bath has an adequate amount of fluid in the tank and that the stirrer is operating properly. Also check that the reference thermometer and control probe are both fully inserted into the bath to minimize temperature gradient errors. **Defective control probe.** Check that the control probe has not been struck, bent, or damaged. Refer to the previous solution for how to check the probe's resistance.
The controller shows that it is controlling at the proper temperature, but the bath temperature is unstable	If the bath does not achieve the expected degree of temperature stability when measured using a thermometer, consider the following: **Wrong proportional band setting.** If the proportional band is set too narrow, the bath will oscillate causing poor stability. In this case, increase the width of the proportional band. If the proportional band setting is too wide, the long-term stability of the bath is affected. In this case decrease the width of the band. (Refer to Section 9.7.) **Bath fluid is too thick.** Make sure that the bath fluid used is less than 50 centiStokes (10 is ideal) at the temperature at which the bath is controlling. Check the fluid manufacturer's specifications. You should also change the bath fluid regularly and if it changes colors or becomes too thick. **Defective control probe.** Check that the control probe has not been struck, bent, or damaged. Refer to the previous solution for how to check the probe's resistance.
The controller alternately heats for a while then cools	**Wrong proportional band setting.** If the proportional band is set too narrow, the bath will oscillate between too much heating and too much cooling causing instability. Increase the width of the proportional band until the temperature stabilizes. (Refer to Section 9.7.)
The bath does not achieve low temperatures	**Insufficient cooling**. This may be caused by lack of refrigerant because of a leak in the system. Refer to Section 12, Charging Instructions.

원문: Fluke Calibration 7312 설명서 · 제조사 원문 자료입니다. 사양은 제조사 사정에 따라 변경될 수 있습니다.

Problem	Causes and Solutions
The controller does not maintain controller parameters or parameters are reset each time the power to the unit is removed	**Note:** Before performing the memory check,you need to record the controller calibration parameters (found in the CAL menu of the instrument) and any user-adjusted parameters that you have changed (such as the programmable set points and proportional band). **Memory Check** Doing a memory check is the easiest way to verify the ability of the battery to maintain controller parameters. 1. Power off the instrument. 2. Disconnect the instrument from AC power for 10 seconds. 3. Reconnect the AC power and power on the instrument. 4. If the display shows InIT and/or the cycle count shows a low number such as 0002, the battery is spent and should be replaced. Contact an Authorized Service Center for assistance. 5. After replacing the battery, you must reprogram the calibration and user-adjustable parameters into the controller.

14.2 Comments

14.2.1 EMC Directive

Hart Scientifics' equipment has been tested to meet the European Electromagnetic Compatibility Directive (EMC Directive, 89/336/EEC). The Declaration of Conformity for your instrument lists the specific standards to which the unit was tested.

14.2.2 Low Voltage Directive (Safety)

In order to comply with the European Low Voltage Directive (73/23/EEC), Hart Scientific equipment has been designed to meet the IEC 1010-1 (EN 61010-1) and the IEC 1010-2-010 (EN 61010-2-010) standards.

원문: Fluke Calibration 7312 설명서 · 제조사 원문 자료입니다. 사양은 제조사 사정에 따라 변경될 수 있습니다.