732C/734C

DC Reference Standard

Operators Manual

August 2018

© 2018 Fluke Corporation. All rights reserved. Specifications are subject to change without notice.
All product names are trademarks of their respective companies.

원문: Fluke Calibration 732C / 734C 설명서 · 제조사 원문 자료입니다. 사양은 제조사 사정에 따라 변경될 수 있습니다.

LIMITED WARRANTY AND LIMITATION OF LIABILITY

Each Fluke product is warranted to be free from defects in material and workmanship under normal use and service. The warranty period is one year and begins on the date of shipment. Parts, product repairs, and services are warranted for 90 days. This warranty extends only to the original buyer or end-user customer of a Fluke authorized reseller, and does not apply to fuses, disposable batteries, or to any product which, in Fluke's opinion, has been misused, altered, neglected, contaminated, or damaged by accident or abnormal conditions of operation or handling. Fluke warrants that software will operate substantially in accordance with its functional specifications for 90 days and that it has been properly recorded on non-defective media. Fluke does not warrant that software will be error free or operate without interruption.

Fluke authorized resellers shall extend this warranty on new and unused products to end-user customers only but have no authority to extend a greater or different warranty on behalf of Fluke. Warranty support is available only if product is purchased through a Fluke authorized sales outlet or Buyer has paid the applicable international price. Fluke reserves the right to invoice Buyer for importation costs of repair/replacement parts when product purchased in one country is submitted for repair in another country.

Fluke's warranty obligation is limited, at Fluke's option, to refund of the purchase price, free of charge repair, or replacement of a defective product which is returned to a Fluke authorized service center within the warranty period.

To obtain warranty service, contact your nearest Fluke authorized service center to obtain return authorization information, then send the product to that service center, with a description of the difficulty, postage and insurance prepaid (FOB Destination). Fluke assumes no risk for damage in transit. Following warranty repair, the product will be returned to Buyer, transportation prepaid (FOB Destination). If Fluke determines that failure was caused by neglect, misuse, contamination, alteration, accident, or abnormal condition of operation or handling, including overvoltage failures caused by use outside the product's specified rating, or normal wear and tear of mechanical components, Fluke will provide an estimate of repair costs and obtain authorization before commencing the work. Following repair, the product will be returned to the Buyer transportation prepaid and the Buyer will be billed for the repair and return transportation charges (FOB Shipping Point).

THIS WARRANTY IS BUYER'S SOLE AND EXCLUSIVE REMEDY AND IS IN LIEU OF ALL OTHER WARRANTIES, EXPRESS OR IMPLIED, INCLUDING BUT NOT LIMITED TO ANY IMPLIED WARRANTY OF MERCHANTABILITY OR FITNESS FOR A PARTICULAR PURPOSE. FLUKE SHALL NOT BE LIABLE FOR ANY SPECIAL, INDIRECT, INCIDENTAL, OR CONSEQUENTIAL DAMAGES OR LOSSES, INCLUDING LOSS OF DATA, ARISING FROM ANY CAUSE OR THEORY.

Since some countries or states do not allow limitation of the term of an implied warranty, or exclusion or limitation of incidental or consequential damages, the limitations and exclusions of this warranty may not apply to every buyer. If any provision of this Warranty is held invalid or unenforceable by a court or other decision-maker of competent jurisdiction, such holding will not affect the validity or enforceability of any other provision.

Fluke Corporation
P.O. Box 9090
Everett, WA 98206-9090
U.S.A.

Fluke Europe B.V.
P.O. Box 1186
5602 BD Eindhoven
The Netherlands

ООО «Флюк СИАЙЭС»
125167, г. Москва,
Ленинградский проспект
дом 37,
корпус 9, подъезд 4, 1 этаж

11/99

원문: Fluke Calibration 732C / 734C 설명서 · 제조사 원문 자료입니다. 사양은 제조사 사정에 따라 변경될 수 있습니다.

Table of Contents

Title **Page**

Introduction 1
Contact Fluke Calibration 3
Safety Information 3
Symbols 4
Hardware Options 5
734C-7001 Instrument Enclosure 5
732C-7001 External Battery and Charger 5
Accessory Y734 Rack Mount Kit 5
Calibration Options 6
Service and Reshipment Information 6
Specifications 7
Applying the Specifications 7
Operating and Calibration Temperature Ranges 7
Temperature Coefficient Specifications 7
Noise Specifications 8
Predicting Stability 8
Output Drift 9
Retrace Specifications 9
Installation 10
Unpacking and Inspection 10
Selecting Line Voltage and Accessing the Fuse 11
Connecting to Line Power 12
Installing a 732C or 732C-7001 in a 734C-7001 Instrument Enclosure 13
Operation 15
Summary of Features 16
732C DC Standard Front Panel 16
732C DC Standard Rear Panel 16
732C-7001 External Battery and Charger Front Panel 16
732C-7001 External Battery and Charger Rear Panel 16
734C-7001 Instrument Enclosure Front Panel 16
734C-7001 Instrument Enclosure Rear Panel 16
Powering the Standard 24
Setting the BAT Switch 25
Charging the Internal Battery 25
Powering the Standard from a 732C-7001 26

원문: Fluke Calibration 732C / 734C 설명서 · 제조사 원문 자료입니다. 사양은 제조사 사정에 따라 변경될 수 있습니다.

Replace the Internal Battery ... 27
Connecting Cables to the Output ... 28
Connecting the GUARD and GROUND ... 29
Monitoring Oven Temperature ... 30
Resetting the IN CAL Indicator ... 30
Monitoring The IN CAL Indicator State Remotely ... 30
Monitoring Long-Term Stability ... 31
Minimizing Error Sources ... 31
Mechanically Induced Errors ... 31
Thermal EMFs ... 32
Output Cable Loading ... 32
Theory of Operation ... 33
Overall Functional Description ... 33
734C Functional Description ... 35
732C-7001 External Battery/Power Supply ... 35
732C Assembly Description ... 35
A1 Front Panel Assembly ... 35
Power Supplies and Battery Charger Assembly A5 ... 36
Overvoltage Protection Circuitry ... 36
Raw DC Power Supply ... 36
Battery Charger ... 36
+11.5 V Preregulator ... 36
Charger Only Switch ... 36
+11.5 V Low-Dropout Regulator ... 37
-6 V Power Supply ... 37
IN CAL Logic ... 37
LED Drive Logic ... 37
AC Power to Battery Power Switching Circuitry ... 37
Battery Circuit ... 37
Rear Panel Connections ... 38
Low-Battery Shutdown Circuitry ... 38
Maintenance ... 38
Service Information ... 38
Replacing the Fuse ... 38
Cleaning the External Surfaces ... 39
Calibration ... 39
Equipment ... 39
Procedure ... 39
Access Procedures ... 41
Initial Access Procedure ... 41
Replacing the Battery ... 42
Replacing the Oven Assembly ... 45
Accessing the A5 Battery Charger ... 45
Removing the Power Transformer Assembly ... 46
Troubleshooting ... 46
10 V Reference Performance Test ... 46
Troubleshooting the A5 Battery Charger Assembly ... 47
Transformer/Rectifier/Filter ... 47
+11.5V DC Regulator ... 47
-6V DC Supply ... 47
Manual Status Information ... 48
Newer Instruments ... 48
List of Replaceable Parts ... 48
Parts ... 49

원문: Fluke Calibration 732C / 734C 설명서 · 제조사 원문 자료입니다. 사양은 제조사 사정에 따라 변경될 수 있습니다.

Introduction

⚠Caution

Set the rear panel BAT switch to ⅄ (on) before connecting ac power. This is required for proper instrument operation. If your 732C was shipped cold, you will need to calibrate it against a traceable standard as described in *Maintenance* before you begin using it. For best results, leave the standard powered for a minimum of 14 days before you calibrate and begin using it.

The 732C (the Product or Instrument) is a dc voltage laboratory standard that produces reference voltages of 10 V, 1 V, and 0.1 V. The 734C (the Product or Instrument) contains four 732C DC Standards in a chassis. The 732C is highly stable, rugged and transportable. Its 10 V output excels in stability, and can be used as your direct link in the traceability chain to the International System of Units (SI), through national standards, or intrinsic standards. You can use the 732C 1 V or 0.1 V output to transfer the "volt" at the 1 V or 0.1 V level.

The 10 V output's long-term stability, predictable drift rate, low uncertainty, convenient level, and immunity to accidental damage make the 732C or 734C the preferred artifact for maintaining a local standard of voltage. The Product calibration history can be further evaluated to reduce the 10 V output uncertainty to much better than stability specifications.

For further information, see the paper by Ray D. Kletke "*Maintaining 10 vdc at 0.3 ppm or better in your laboratory*", available from Fluke or in the NCSL Proceedings 1995, pp 275-289.

All outputs of the 732C can withstand short circuit indefinitely, without damage to the Product or disruption of the state of calibration. Recovery time for a momentary short is less than 2 minutes; for an extended short, recovery time is <2 hours.

To maintain calibration as a traceable standard, the 732C must continue to receive uninterrupted operating voltage from ac line power or from the internal battery. If battery voltage drops too low, the front panel IN CAL indicator goes out and recalibration is required.

원문: Fluke Calibration 732C / 734C 설명서 · 제조사 원문 자료입니다. 사양은 제조사 사정에 따라 변경될 수 있습니다.

The internal rechargeable battery (if switched on) protects the standard from line power interruption and provides power for hot shipment (shipment under power). The 732C outputs are unaffected as you change between battery or ac line power. Battery operation with a fully charged battery lasts at least 72 hours near room temperature. You can extend battery operation by connecting an external 12 V battery such as The 732C-7001 to the rear panel MONITOR/EXT BAT IN connector. Plugging the 732C into ac line power for 36 hours fully recharges the internal battery.

Four front panel indicators show operating status. The 732C-7001 External Battery and Charger has all but the IN CAL indicator.

- AC PWR lights when the 732C is connected to ac line power.
- IN CAL goes out to warn you when the 732C may have lost its calibration. This indicator responds to an excessively large drop in battery voltage or a large change in oven temperature. If battery voltage falls below the level needed to keep the 732C working normally, the IN CAL indicator extinguishes, indicating a loss of the state of calibration. Once power is restored and the output has been verified, you can reset the IN CAL indicator.

Note

An illuminated IN CAL indicator is not sufficient by itself to indicate the 732C satisfies the specifications. See the associated reports of calibration for the Product.

- LOW BAT blinks to warn you to plug the line cord into ac power when only a few hours of battery operation remain.
- CHARGE lights when the battery is being recharged in constant-current charge mode, and is off when the battery is charged to the 90 % level. At 90 % of full charge, a float charge completes and maintains full charge.

You can monitor the oven temperature by measuring the resistance of the oven temperature thermistor through the rear panel MONITOR/EXT BAT IN connector. Instructions for using this connector are in *Operation*.

원문: Fluke Calibration 732C / 734C 설명서 · 제조사 원문 자료입니다. 사양은 제조사 사정에 따라 변경될 수 있습니다.

Contact Fluke Calibration

To locate an authorized service center or to contact Fluke Calibration, call one of the following telephone numbers:

- Technical Support USA: 1-877-355-3225
- Calibration/Repair USA: 1-877-355-3225
- Canada: 1-800-36-FLUKE (1-800-363-5853)
- Europe: +31-40-2675-200
- Japan: +81-3-6714-3114
- Singapore: +65-6799-5566
- China: +86-400-810-3435
- Brazil: +55-11-3759-7600
- Anywhere in the world: +1-425-446-6110

To see product information and download the latest manual supplements, visit Fluke Calibration's website at www.flukecal.com.

To register your product, visit http://flukecal.com/register-product.

Safety Information

A **Warning** identifies conditions and procedures that are dangerous to the user. A **Caution** identifies conditions and procedures that can cause damage to the Product or the equipment under test.

⚠⚠Warnings

To prevent possible electrical shock, fire, or personal injury:

- **Read all safety information before you use the Product.**
- **Do not put the Product where access to the mains power cord is blocked.**
- **Batteries contain hazardous chemicals that can cause burns or explode. If exposure to chemicals occurs, clean with water and get medical aid.**
- **Do not disassemble the battery.**
- **Repair the Product before use if the battery leaks.**
- **Connect an approved three-conductor mains power cord to a grounded power outlet.**

원문: Fluke Calibration 732C / 734C 설명서 · 제조사 원문 자료입니다. 사양은 제조사 사정에 따라 변경될 수 있습니다.

- **Use this Product indoors only.**
- **Use only specified replacement fuses.**
- **Make sure the ground conductor in the mains power cord is connected to a protective earth ground. Disruption of the protective earth could put voltage on the chassis that could cause death.**
- **Use only the mains power cord and connector approved for the voltage and plug configuration in your country and rated for the Product.**
- **Do not use the Product around explosive gas, vapor, or in damp or wet environments.**
- **Do not alter the Product and use only as specified, or the protection supplied by the Product can be compromised.**

Symbols

The symbols shown in Table 1 can be found in this manual or on the Product.

Table 1. Symbols

Symbol	Description	Symbol	Description
⚠	WARNING. HAZARDOUS VOLTAGE. Risk of electric shock.	CSA C US	Certified by CSA Group to North American safety standards.
⚠	WARNING. RISK OF DANGER.	CE	Conforms to European Union directives.
📖	Consult user documentation.	⊟	Fuse
	Conforms to relevant Australian EMC standards.		This product complies with the WEEE Directive marking requirements. The affixed label indicates that you must not discard this electrical/electronic product in domestic household waste. Product Category: With reference to the equipment types in the WEEE Directive Annex I, this product is classed as category 9 "Monitoring and Control Instrumentation" product. Do not dispose of this product as unsorted municipal waste.

원문: Fluke Calibration 732C / 734C 설명서 · 제조사 원문 자료입니다. 사양은 제조사 사정에 따라 변경될 수 있습니다.

Hardware Options

Table 2 summarizes hardware options for the 732C. Calibration Options are described further on in this manual.

Table 2. 732C/734C Hardware Options and Accessories

Model Number	Name
734C-7001	Instrument Enclosure
732C-7001	External Battery and Charger
732C-7002	Transit Case for two 732Cs or 732C-7001s
Y734	Rack Mount Kit for 734C or 734C-7001

734C-7001 Instrument Enclosure

The 734C DC Reference Standard is made up of one 734C-7001 Instrument Enclosure and four 732C DC Standards. The 734C-7001 can be purchased separately as needed for your application. The enclosure securely holds up to four 732C DC Standards and/or 732C-7001 External Battery/Chargers.

An ac power bus inside the 734C-7001 enclosure powers up to four 732C Products with only one ac line cord. Using the enclosure allows you to rack mount 732Cs. (See Y734 Rack Mount Kit.)

732C-7001 External Battery and Charger

The 732C-7001 External Battery and Charger is contained in the same enclosure as the 732C. This means it fits into and is powered by the 734C-7001 Instrument Enclosure just like a 732C DC Standard.

When the external battery is completely charged and connected to a completely charged 732C, it increases 732C battery operating time from 72 to 130 hours. Just as in the 732C, the charger in the 732C-7001 takes 36 hours to completely charge the battery (with no load on the battery). See *Operation* for information about interconnecting 732Cs and 732C-7001s.

Accessory Y734 Rack Mount Kit

To rack mount a 732C, use the 734C-7001 Instrument Enclosure (standard equipment with The 734C). Use Accessory Y734 Rack Mount Kit to mount the enclosure in a rack. Outside dimensions of the 732C and 734C are shown in *Specifications*. Instructions for rack mounting the 734C-7001 Instrument Enclosure are packed with the kit.

원문: Fluke Calibration 732C / 734C 설명서 · 제조사 원문 자료입니다. 사양은 제조사 사정에 따라 변경될 수 있습니다.

Calibration Options

The 732C ships with an ISO/IEC 17025 accredited calibration certificate. A procedure for calibration is in *Maintenance*. To maintain the best uncertainty, keep the 732C powered by ac power or battery, even during shipment.

Note

Contact a Fluke Calibration Sales or Service Center for price and delivery information about 732C calibration. See Contact Fluke Calibration.

732C-200 On-Site Calibration

Option 732C-200 is the Fluke Direct Volt Maintenance Program, as has been applied to other Fluke Calibration dc standards equipment. This program works as follows:

1. Fluke Calibration hot-ships a Fluke Calibration-owned transfer standard with all the necessary interconnecting cables and clear instructions.
2. You make a series of comparisons and send your data to Fluke Calibration.
3. Fluke Calibration sends you a calibration report that assigns a value to your 732C 10 V, 1V, and 0.1V outputs.

Service and Reshipment Information

⚠⚠ Warning

Service procedures, including replacing the batteries, are to be done by qualified service personnel only. To avoid electric shock or fire, do not service the 732C unless you are qualified to do so.

If your standard ever needs service, you may return it to Fluke Calibration for Warranty or after-warranty repair. See *Contact Fluke Calibration*. If you are qualified to troubleshoot electronic equipment, you can see *Maintenance* for theory, troubleshooting, and calibration information.

The 732C and 734C are designed to withstand the shock and vibration of air and ground shipment, provided that you protect the equipment with a proper shipping container. When you return a 732C or 734C to Fluke Calibration for service or calibration, use the original shipping carton or a replacement carton obtained from Fluke Calibration.

⚠Caution

Do not charge a 732C or 732C-7001 while it is in the transit case. Doing so can cause overheating and possible equipment damage, and in the case of the 732C, loss of the state of calibration.

원문: Fluke Calibration 732C / 734C 설명서 · 제조사 원문 자료입니다. 사양은 제조사 사정에 따라 변경될 수 있습니다.

Specifications

For full specifications, see the *732C/734C Specifications* located on the Fluke Calibration website.

Applying the Specifications

The Product is designed specifically for metrologists. Not only does it provide the performance metrologists need, but it is specified in ways to allow users to really understand the uncertainties of the measurements, and easily make allowance for compiling uncertainty budgets. Contemporary metrology practices, including ISO/IEC17025 based laboratory accreditation schemes, require uncertainty analysis to be performed in accordance with statistically based techniques described in the ISO Guide to the Expression of Uncertainty in Measurement (often referred to as the 'GUM'). Specifications are provided at a confidence level of 99 %, which is a coverage factor of k=2.58 to enable this.

In addition to the reference laboratory calibration uncertainty, a primary source of uncertainty in the Product outputs is the time stability over 30 day or longer periods of time. But as has been noted in many metrology papers, other sources of uncertainty can come into play depending on the operating and traveling environment and history of each instrument. For example, a change in the altitude, humidity, or temperature of the instrument environment may require uncertainty terms be properly included with the calibration uncertainty and time stability uncertainty when determining the expanded uncertainty of an instrument output.

To achieve specified performance, you must take care to eliminate all thermal emf errors from the measurement system. Fluke Calibration recommends that bare copper wire with low-leakage insulation or low-thermal leads be used for all connections to the binding posts and other instruments.

Operating and Calibration Temperature Ranges

As a voltage or transfer standard, the Product will commonly be used in a calibration laboratory where the temperature is controlled to ±1 °C, and the time stability specifications are written for that situation. A majority of electrical calibration laboratories operate at a nominal temperature of 23 °C, the temperature at which the Product is calibrated by Fluke Calibration during manufacture and service. The Product is also capable of being calibrated at another temperature within its specified operating temperature range, and the ±1 °C specifications will apply to operation within ±1 °C of the calibration temperature.

Temperature Coefficient Specifications

Performance at other temperatures than the calibration temperature may be determined by including an allowance for temperature coefficient over the additional temperature range. For example, operating at 27 °C with a 23 °C calibration temperature, would require adding 3 ° worth of temperature coefficient error to each output, because 27 °C is 3 °C outside of 23 °C + 1 °C = 24 °C. Here, for the 10 V output, an added error of 3 °C × 0.04 µV/V-°C × 10 V = 1.2 µV due to temperature coefficient would be incurred. More commonly, to maximize performance the Product can be characterized and calibrated at the intended operating temperature. Similarly, if the laboratory environment varies by more than 1 °C, the temperature coefficient can be applied in the same way to the total amount of variation. For example, if the laboratory is 23 °C ±3 °C, the temperature coefficient would need to be applied for the two degree variance beyond the specified 1 °C.

원문: Fluke Calibration 732C / 734C 설명서 · 제조사 원문 자료입니다. 사양은 제조사 사정에 따라 변경될 수 있습니다.

Noise Specifications

The extensive and extended studies of preceding 732A and 732B voltage standards has shown that in addition to the more standard 0.01 Hz to 10 Hz noise, there exists other noise that is of much lower frequency that has occasionally been referred to as *1/f like.* This noise is characterized by the S_1 and S_{ra} specifications and does increase with the time of sampling, but not nearly as fast as *1/f* noise. When the slope of the regression line for an instrument output has been determined from the results of multiple calibrations over months or more of time, an improved uncertainty prediction of the performance for that output can be obtained by properly applying the stability performance and noise uncertainty specifications.

The explanation for this specific approach can be found in the paper *A New Approach to Specifying a DC Reference Standard* by John Emery, Ray Kletke, and Howard Voorheis, published in the Proceedings of the 1992 Measurement Science Conference. In the summary section of this paper, they state "Finally, the effect of low-frequency noise on regression uncertainty was addressed. The presence of low-frequency noise can cause the DCRS (DC Reference Standard) uncertainty to be underestimated using classical regression analysis. A parameter, S_1, was introduced which measures the effect of low-frequency noise on output uncertainty. By including S_1 as a performance specification, this low-frequency noise effect is bounded and the uncertainty more realistically estimated."

Other papers point to the need to add uncertainties beyond those of standard regression analysis. In *The 1995 NCSL 10V Josephson Array Interlaboratory Comparison* by Les Huntley, as presented at the 1996 NCSL Workshop and Symposium, pp. 33-48, he states "it has been known for some time that short term standard deviations (of 732B data taken over a few hours or a few days) is considerably smaller than long term standard deviation (of data taken over several months)." He also states "A reasonable guess at present is that the noise is "chaotic", that is, it remains within limits determined by the physical system, but is sensitive to small changes in conditions." Whatever the sources of the very low frequency noise, the S_1 parameter can be utilized to adequately capture these sources of uncertainty.

Predicting Stability

The Product specifications combined with a linear regression analysis can be used to predict stability for a given period of time. Here, stability is defined as the output uncertainty minus the calibration uncertainty, and this is at the 99 % Confidence Level for the Product. When the output voltage is characterized by a regression model, stability is given by this equation:

$$b\left(\frac{P}{365}\right) + t_1 \times S_1 \sqrt{\left[\frac{S_{ra} \times t_2}{S_1 \times t_1}\right]^2 + \left(\frac{1}{n}\right) + \left[\frac{(\bar{x} + P - x_1)^2}{\sum(x_j - \bar{x})^2}\right]}$$

where b = slope of regression in μV/V per year for the regression data

S_1 = standard deviation about the regression (SDEV) for the regression data

S_{ra} = SDEV of data filtered with 7-day moving average filter (MAF)

P = period of time under consideration in days

$\bar{x}$ = mean of the time for the regression data

원문: Fluke Calibration 732C / 734C 설명서 · 제조사 원문 자료입니다. 사양은 제조사 사정에 따라 변경될 수 있습니다.

n = number of periods in the regression data (for example, 180 = 2 periods per day for 90 days)

X_j = jth period

X_1 = time at beginning of the regression data

t_1 = student's t statistic for (n-2) degrees of freedom (typically 2.6)

t_2 = student's t statistic for [{n/(7 days)} - 2] degrees of freedom (typically 2.81)

To reduce 0.01 Hz to 10 Hz noise affects for this regression analysis, each data point for the computation of the regression parameters is usually the average voltage of about 50 readings taken in a 50-second measurement period.

If additional calibrations are performed on an instrument, noise specifications that are specific to that instrument can be computed, and then more accurate stability predictions can be made for the instrument outputs. In this case, b, S_1 and S_{ra} values specific to each output would be developed for an instrument that could then be utilized in the above stability prediction equation.

Wider temperature ranges, altitude changes, and humidity changes will affect an instrument, requiring that uncertainties for these effects be included in the above output voltage prediction equation. The paper listed below plus others can help with properly including needed uncertainties.

Output Drift

Many instrument outputs drift nearly linearly over long periods of time, and so a linear regression fits the output voltage long-term time stability behavior very well. However, some have drift rates that are non-linear, especially earlier in their history. It is often possible to linearize the relationship between an output and time by transforming the time variable using transformations such as x' = log(x-d) or x' = sqrt(x-d), where d is a number corresponding to a date. This often leads to much lower uncertainty for the regression of output voltage versus time. The paper *Predicting 10 Vdc Reference Standard Output Voltage* by Raymond D. Kletke found in the 1998 NCSL Conference and Symposium, pp. 615-621 and other papers can help with this approach.

Retrace Specifications

For optimum performance, the core voltage reference circuitry is maintained at a controlled, higher temperature by heater elements and control circuitry. If battery power is lost, the heated circuitry cools off, and as a result of the laws of physics, the voltage reference element may change voltage temporarily or permanently. If the temperature that the voltage reference cools to is in the range of 23 °C to 35 °C, and the power-off time period is up to several days, then the amount of shift in the 10 V output will be no more than that given in the Retrace Error table for the time off period. For example, if the Product is left without ac power long enough that the internal battery discharges and the internal circuitry cools to a 23 °C room temperature for 3 days, then the 10 V output will change by no more than 0.25 µV/V or 2.5 µV. Typically, the Product long-term drift rate (slope) will not change for conditions within those specified for retrace error.

원문: Fluke Calibration 732C / 734C 설명서 · 제조사 원문 자료입니다. 사양은 제조사 사정에 따라 변경될 수 있습니다.

Installation

This section provides instructions for:

- Unpacking
- Installation
- Selecting line voltage
- Checking or replacing the fuse
- Connecting to line power

Because this section explains fusing and operating environment requirements, you should read this section before operating the standard. *Operation* contains instructions for operating your standard.

Unpacking and Inspection

The 732C and 734C are shipped in a container that is specially designed to prevent damage during shipping. However, you should inspect the standard carefully for damage, and immediately report any damage to the shipper. Instructions for inspection and claims are included in the shipping container. If you need to reship the 732C, see *Service and Reshipment Information*.

Inspect the Product to determine whether the IN CAL indicator is lit and note the condition. Immediately see the fusing and line voltage instructions in this section, and plug the standard into ac line power.

Accompanying the standard should be an ac line power cord appropriate for your country. Line power cords available from Fluke Calibration are listed in Table 3 and illustrated in Figure 1. If you have any questions about the contents of the carton you are unpacking, contact the nearest Fluke Calibration Service Center. See *Contact Fluke Calibration*.

For more information about calibration options, see *Calibration Options*. If a verification test is required for your acceptance procedures, see *Maintenance* for instructions.

Table 3. Standard Equipment

Item	Model or Part Number
AC Line Cord	(See Table 2 and Figure 1)
732C/734C Operators Manual	Online

원문: Fluke Calibration 732C / 734C 설명서 · 제조사 원문 자료입니다. 사양은 제조사 사정에 따라 변경될 수 있습니다.

Selecting Line Voltage and Accessing the Fuse

⚠ Caution

- **To avoid loss of the state of calibration in case of ac power interruption, set the BAT switch to ⅊ (on). This enables battery backup power.**
- **To avoid blowing the ac line fuse, verify the position of the line voltage selection drum before plugging in the line cord. Rotate the drum if necessary to match local line power.**
- **To prevent Product damage, verify that a T 175 mA, 250V fuse is installed. No other rating or type of fuse is acceptable.**

The ac input module on the rear panel has four line voltage settings: 100 V, 120 V, 220 V, and 240 V. Each voltage setting has a voltage tolerance of ±10 % and accepts line frequencies of 50 Hz or 60 Hz.

To select line voltage and verify the fuse, or to replace the fuse, see Figure 2, and proceed as follows:

1. Disconnect the ac line cord from the wall outlet and the rear panel.
2. Using a small screwdriver, pop open the line voltage selection module door from the top.
3. Using the screwdriver, pry the tab of the fuse holder to slide out the fuse holder.
4. Verify the fuse type and rating using the data on the rear panel or Figure 2, and replace it.
5. If you need to change the line voltage setting, remove the drum and rotate it so that the desired voltage is facing outward. Replace the drum.
6. Close the line voltage selection module door. Verify that the line voltage you selected is showing through the window.

원문: Fluke Calibration 732C / 734C 설명서 · 제조사 원문 자료입니다. 사양은 제조사 사정에 따라 변경될 수 있습니다.

Connecting to Line Power

⚠⚠ Warning

To avoid electric shock while charging or using the standard with the line cord plugged in, connect the factory supplied, three-conductor line power cord to a properly grounded power outlet. Do not use a two-conductor adapter or extension cord to open the protective ground connection.

⚠ Caution

To avoid loss of the state of calibration in case of ac power interruption, set the BAT switch to ⅄ (on). This enables battery backup power.

If the instrument is in calibration and running on battery power, make sure that the line voltage setting and fuse are correct. Connect the line cord to the rear panel ac input receptacle, and plug the line cord into a properly grounded three-prong outlet. Make sure that the AC PWR indicator is lit. If not, check for an open fuse. AC line cords are listed in Table 4 and shown in Figure 1.

Table 4. AC Line Cords Available for Fluke Calibration Instruments

Type	Voltage/Current	Fluke Calibration Option Number
North American	120 V/15 A	LC-1
North American	240 V/15 A	LC-2
Universal Euro	220 V/16 A	LC-3
United Kingdom	240 V/13 A	LC-4
Switzerland	220 V/10 A	LC-5
Australian	240 V/10 A	LC-6
South African	240 V/5 A	LC-7

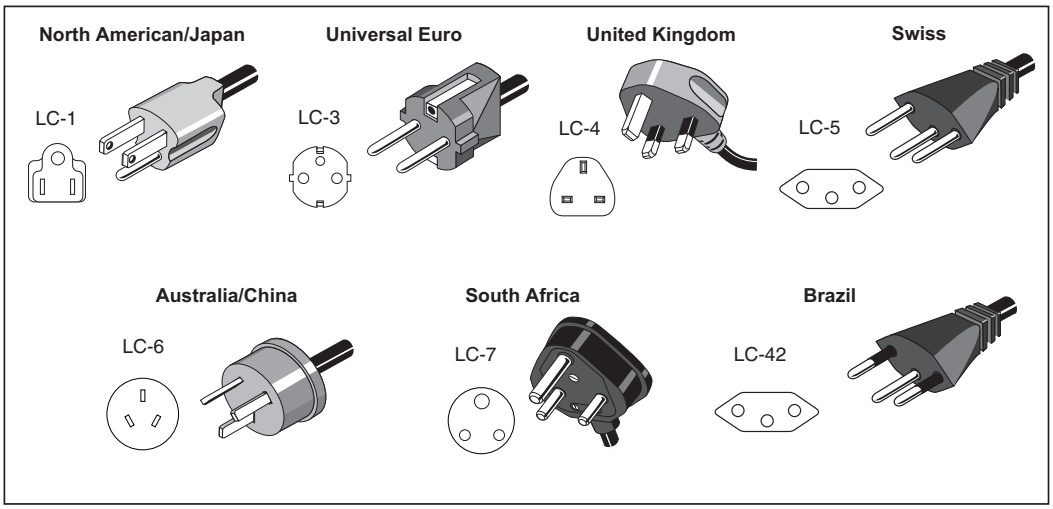

hhp004.eps

Figure 1. Line Power Cords Available for Fluke Calibration Instruments

원문: Fluke Calibration 732C / 734C 설명서 · 제조사 원문 자료입니다. 사양은 제조사 사정에 따라 변경될 수 있습니다.

If the Product has been off, is cold, and has lost its state of calibration, verify that the line voltage setting and fuse are correct. Make sure the battery switch is in the O position. Connect the line cord to the rear panel ac input receptacle, and plug the line cord into a properly grounded three-prong outlet. After 2 hours, place the battery switch in the ∧ position. Verify that the AC PWR indicator is lit. If it is not, check for an open fuse. In case of further difficulty, see *Maintenance* for troubleshooting information.

The 732C and 732C-7001 are IEC Safety Class I (grounded enclosure) instruments, and must be properly connected to earth ground when plugged into ac line power. When the ac line cord is plugged into a properly grounded three-prong outlet, the safety ground path for the battery charger is through the line cord ground lead.

Note

See Operation *for additional information about powering the standard from the ac line or the internal battery.*

Installing a 732C or 732C-7001 in a 734C-7001 Instrument Enclosure

When you slide a 732C or 732C-7001 into one of the instrument bays in the chassis, it automatically connects to the ac power bus. The 734C-7001 Instrument Enclosure provides an ac line power bus only. There is no fuse in the 734C-7001. All fusing and line voltage selection is done in the installed 732Cs and 732C-7001s.

To install a 732C or 732C-7001 in a 734C-7001 Instrument Enclosure, see Figure 2 and proceed as follows:

1. Remove the enclosure ac line cord from line power.
2. Verify that the 732C or 732C-7001 BAT switch is set to ∧ and disconnect line power from the 732C or 732C-7001.
3. Insert the 732C or 732C-7001 into one of the four instrument bays. Guides along the bottom and a rear panel alignment stud inside the enclosure ensure correct installation.
4. When the Product is fully installed, lift and engage the locking lever at the bottom of the 732C or 732C-7001 front panel and finger-tighten the thumbscrew.
5. Prepare and connect cables to the rear panel MONITOR/EXT BAT IN (732C) or BAT OUT (732C-7001) connectors as described in *Operation*.
6. Connect the enclosure's ac line cord to a grounded three-prong ac outlet. All units installed in the chassis are powered by this line cord.

Note

Voltage shifts may occur when units are installed or removed from the enclosure due to temperature change.

원문: Fluke Calibration 732C / 734C 설명서 · 제조사 원문 자료입니다. 사양은 제조사 사정에 따라 변경될 수 있습니다.

732C/734C
Operators Manual

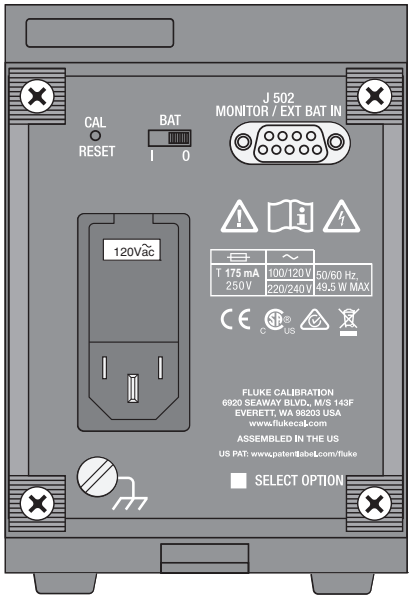

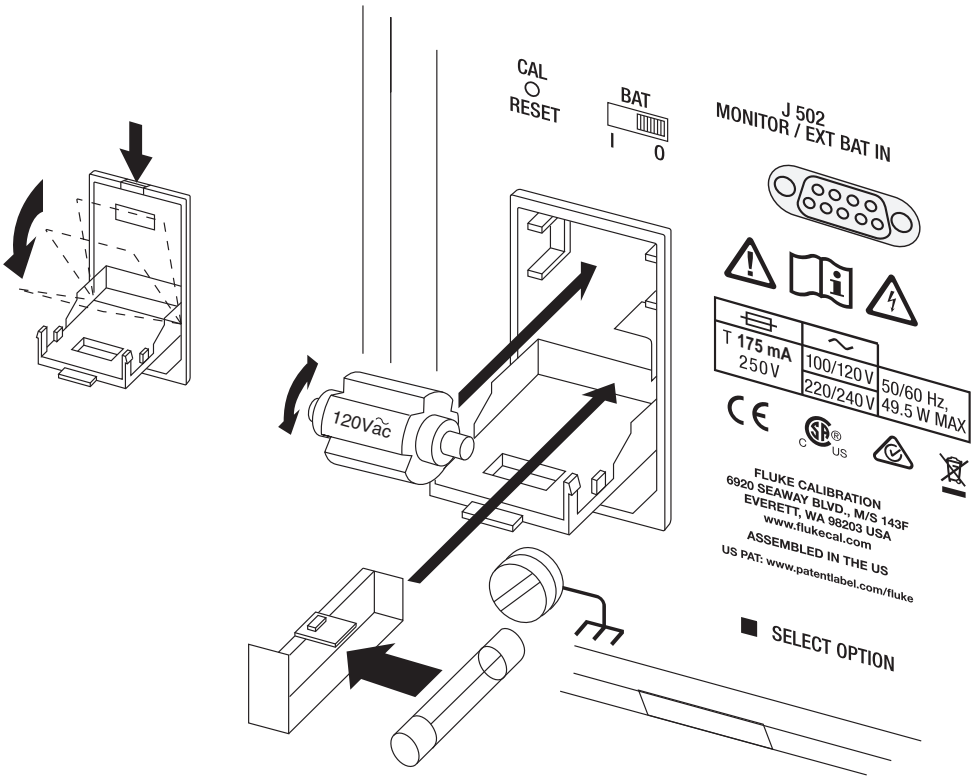

k3f.eps

Figure 2. Line Power Label and Fuse Location

원문: Fluke Calibration 732C / 734C 설명서 · 제조사 원문 자료입니다. 사양은 제조사 사정에 따라 변경될 수 있습니다.

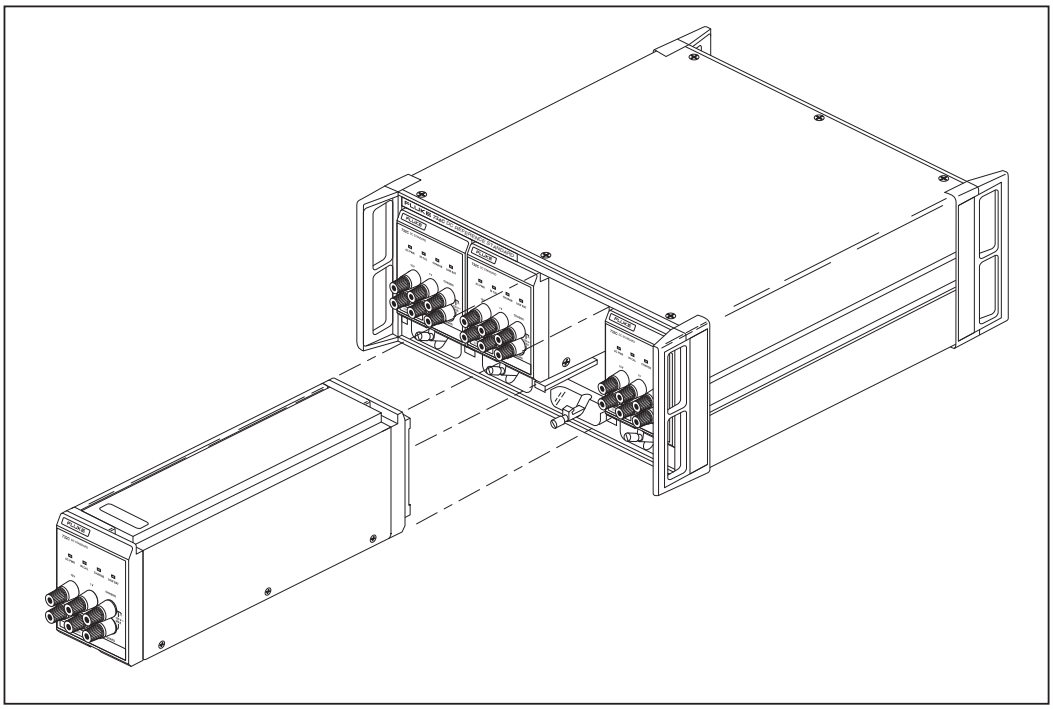

les004.eps

Figure 3. Installing a 732C or 732C-7001 in a 734C-7001 Instrument Enclosure

Operation

Information in this section tells you how to operate the Product on battery and ac line power. This section begins with a description of the features of the models covered in this manual. Instructions for how to power the standard, connect it to other instruments, and use it to make a voltage transfer follow. Other operating topics, including minimization of errors during measurements, are included here. Verify that the AC PWR indicator is lit.

Note

If your 732C was shipped cold, you will need to calibrate it against a traceable standard as described in Section 5 before you begin using it. For best results, leave the standard powered for 14 days before you calibrate and begin using it.

To maintain the state of calibration as a traceable standard, the 732C must continue to receive uninterrupted operating voltage from the line power or from the internal battery, which provides approximately 72 hours of off-line operation near room temperature when fully charged.

원문: Fluke Calibration 732C / 734C 설명서 · 제조사 원문 자료입니다. 사양은 제조사 사정에 따라 변경될 수 있습니다.

Summary of Features

Please read the summary of features before you use the Product. Separate illustrations and tables describe the functions and locations of features on the 732C DC Standard, 732C-7001 External Battery and Charger, and 734C-7001 Instrument Enclosure.

732C DC Standard Front Panel

Figure 4 shows the 732C DC Standard front panel features. Table 4 describes these features.

732C DC Standard Rear Panel

Figure 5 shows the 732C DC Standard rear panel features. Table 5 describes these features.

732C-7001 External Battery and Charger Front Panel

Figure 6 shows the 732C-7001 External Battery and Charger front panel features. Table 6 describes these features.

732C-7001 External Battery and Charger Rear Panel

Figure 7 shows the 732C-7001 External Battery and Charger rear panel features. Table 7 describes these features.

734C-7001 Instrument Enclosure Front Panel

Figure 8 shows the 732A-7001 Instrument Enclosure front panel features. Table 8 describes these features.

734C-7001 Instrument Enclosure Rear Panel

Figure 9 shows the 732A-7001 Instrument Enclosure rear panel features. Table 9 describes these features.

원문: Fluke Calibration 732C / 734C 설명서 · 제조사 원문 자료입니다. 사양은 제조사 사정에 따라 변경될 수 있습니다.

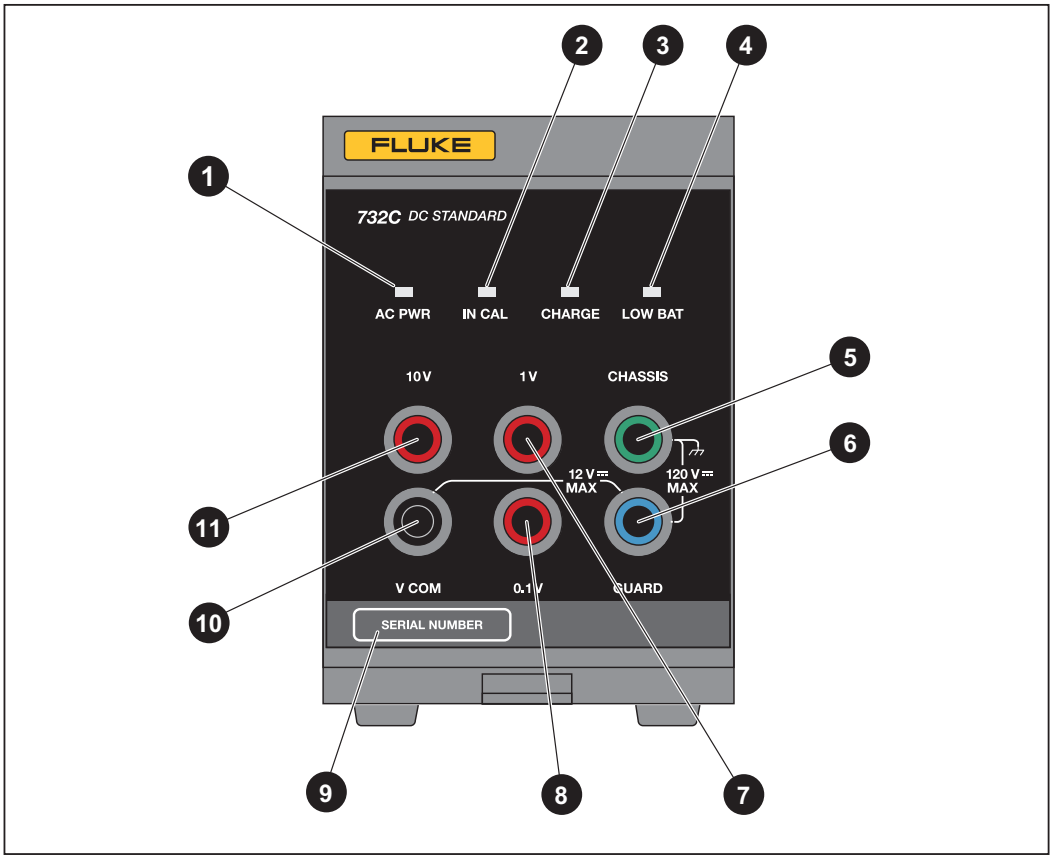

Figure 4. 732C Front-Panel Features

원문: Fluke Calibration 732C / 734C 설명서 · 제조사 원문 자료입니다. 사양은 제조사 사정에 따라 변경될 수 있습니다.

Table 5. 732C Front-Panel Features

Item	Feature	Description
1	AC PWR Indicator	Lights whenever the standard is connected to ac line power.
2	IN CAL Indicator	Goes out to warn you when a loss of calibration may have occurred. This indicator goes out in response to an excessive drop in battery voltage or a gross change in oven temperature. Once you have recalibrated the 732C, you can reset the IN CAL indicator by pressing the recessed rear panel CAL RESET switch. *Note* *An illuminated IN CAL indicator is not sufficient, by itself, to indicate the 732C satisfies its specifications. See the Calibration Certificate.*
3	CHARGE Indicator	Lights when the internal battery is in the constant-current charging mode. The rear panel BATTERY switch must be in the | position to charge the battery. When the battery is near full charge, the CHARGE indicator goes off, and the charging circuit goes into float-charging mode to complete and maintain full charge.
4	LOW BAT Indicator	Blinks when approximately 5 hours of battery operation time remains. When LOW BAT blinks, plug the standard into ac line power as soon as possible to avoid extinguishing the IN CAL indicator and invalidating the state of calibration.
5	CHASSIS Binding Post	A connection point for chassis ground. You can use this connector when operating on battery power to ground the chassis to the earth ground point in a system of interconnected instruments. Another chassis ground connection is on the rear panel.
6	GUARD Binding Post	The connection point for the internal voltage guard. See the text in this section for instructions on use of the GUARD connection.
7	Binding Post	The positive connection for the 1 V output.
8	0.1 V Binding Post	The positive connection for the 0.1 V output.
9	Serial Number	Use this identifier in your correspondence with Fluke Calibration.
10	V COM Binding Post	The common connection for all outputs.
11	10 V Binding Post	The positive connection for the 10 V output.

원문: Fluke Calibration 732C / 734C 설명서 · 제조사 원문 자료입니다. 사양은 제조사 사정에 따라 변경될 수 있습니다.

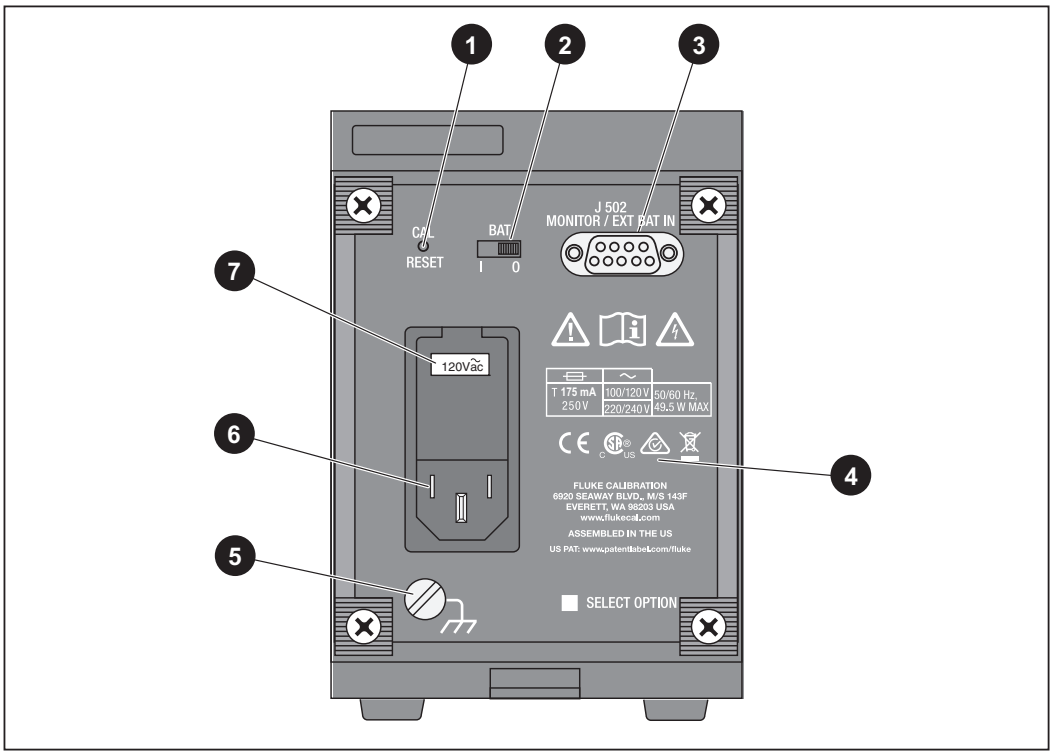

k6f.eps

Figure 5. 732C Rear-Panel Features

원문: Fluke Calibration 732C / 734C 설명서 · 제조사 원문 자료입니다. 사양은 제조사 사정에 따라 변경될 수 있습니다.

Table 6. 732C Rear-Panel Features

Item	Feature	Description
1	Recessed CAL RESET Switch	If the IN CAL indicator is off and normal 732C operating conditions are met, pressing this momentary-contact switch for approximately 4 seconds resets IN CAL. You should calibrate the 732C before resetting the IN CAL indicator. Normally, a calibration sticker covers the hole to prevent tampering with this control.
2	BATTERY Switch	Connects and disconnects the battery from the charger and reference circuitry.
3	MONITOR/EXT BAT IN Connector	Provides the input/output point for three functions: • Powering the standard from external 12 V dc to 15 V dc. • Measuring the resistance of the oven temperature thermistor. • Remotely monitoring the IN CAL indicator state.
4	Fuse Type and Rating Label	States the correct fuse type and rating for use in the 100 V, 120 V, 220 V, and 240V settings. Use of an improper fuse defeats the safety design of the standard and can cause Product damage.
5	CHASSIS Connector	A connection point for chassis ground. You can use this connector to ground the chassis to the earth ground point in a system of interconnected instruments. Another chassis ground connection is on the front panel. (See the text in this section for more information about guarding and grounding.)
6	Line Cord Plug and Fuse Holder	Houses the ac line fuse and the male three-prong connector for an IEC-type power cord. The plastic cover fits over the fuse so it can be accessed only when the power cord is not connected.
7	Line Voltage Selector	Allows selection of four ac line voltage settings 100 V, 120 V, 220 V, and 240 V, each with a tolerance of 10 %. The accepted line frequencies are 50 Hz and 60 Hz.

원문: Fluke Calibration 732C / 734C 설명서 · 제조사 원문 자료입니다. 사양은 제조사 사정에 따라 변경될 수 있습니다.

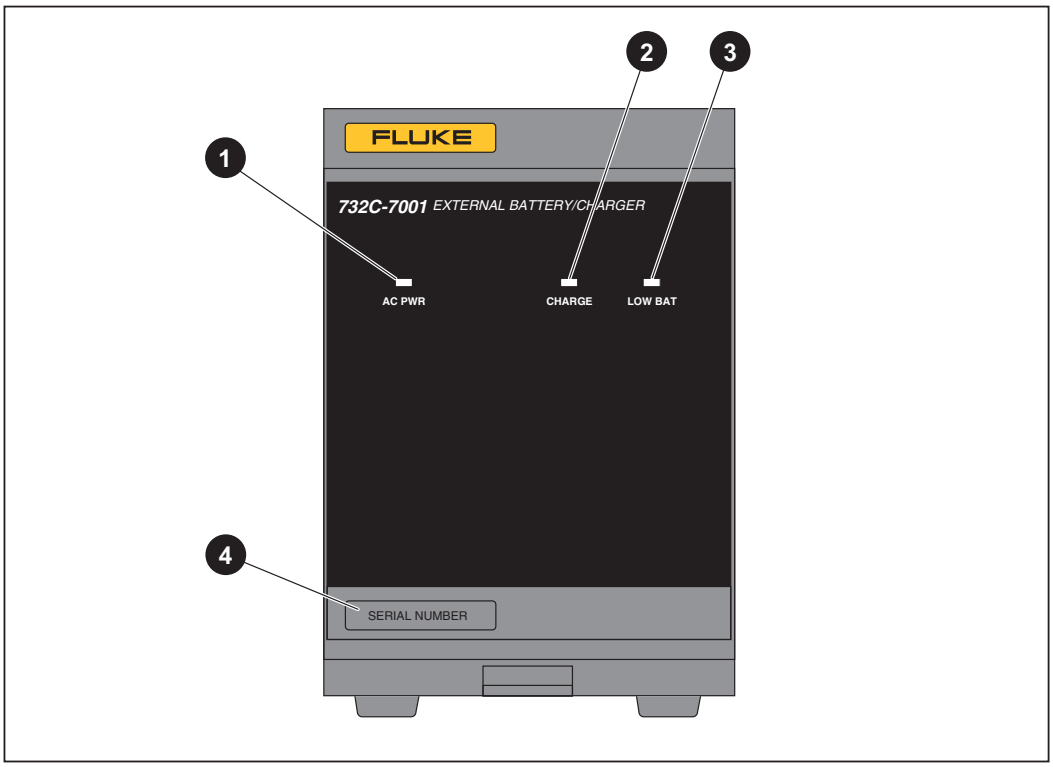

ies007.eps

Figure 6. 732C-7001 External Battery/Charger Front Panel Features

Table 7. 732C-7001 External Battery/Charger Front Panel Features

Item	Feature	Description
1	AC PWR Indicator	Lights whenever the battery unit is connected to ac line power.
2	CHARGE Indicator	Lights when the battery unit is in the constant-current charging mode. When the battery is near full charge, the CHARGE indicator goes off, and the charging circuit goes into float-charging mode to complete and maintain full charge.
3	LOW BAT Indicator	Blinks when approximately 5 hours of battery operation time remain. When LOW BAT blinks, plug the battery unit into ac line power as soon as possible to avoid loss of power to an attached 732C.
4	Serial Number	Use this identifier in your correspondence with Fluke Calibration.

원문: Fluke Calibration 732C / 734C 설명서 · 제조사 원문 자료입니다. 사양은 제조사 사정에 따라 변경될 수 있습니다.

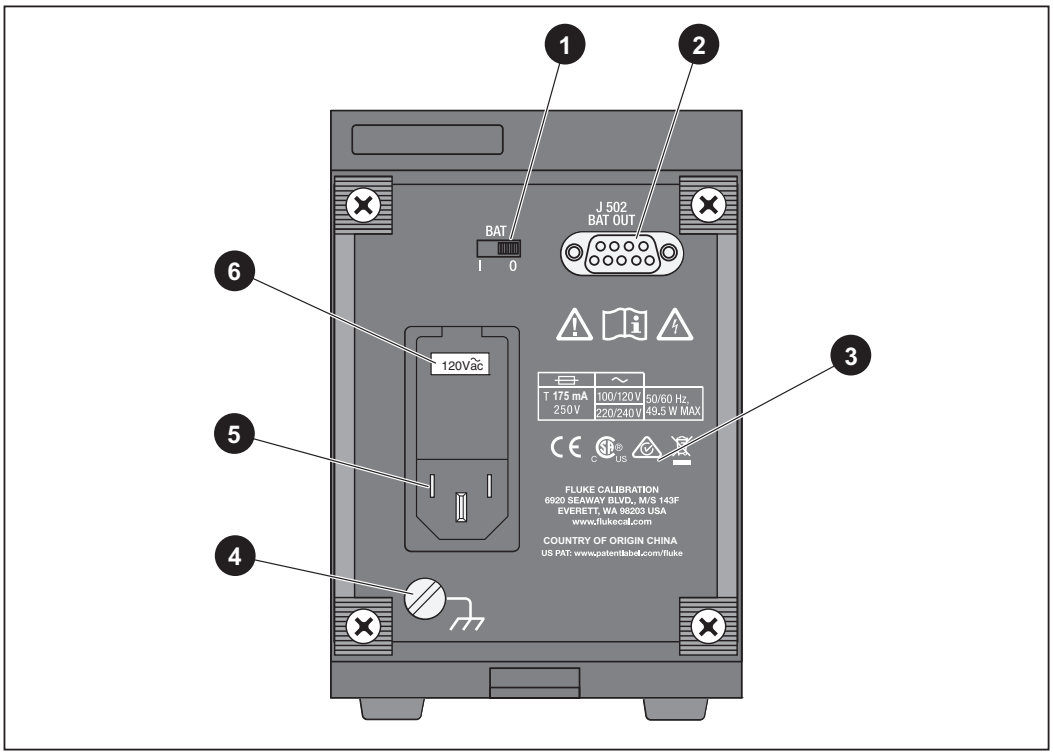

k8f.eps

Figure 7. 732C-7001 External Battery/Charger Rear Panel Features

Table 8. 732C-7001 External Battery/Charger Rear Panel Features

Item	Feature	Description
1	BATTERY Switch	Connects and disconnects the battery from the internal charger.
2	BAT OUT Connector	Provides the connection point for dc output from the battery unit. Pins 5 and 9 are the dc voltage positive line, and pins 1 and 6 are the dc voltage negative line. All other pins are not used.
3	Fuse Type and Rating Label	States the correct fuse type and rating for use in the 100 V, 120 V, 220 V, and 240 V settings. Use of an improper fuse defeats the safety design of the unit and can cause damage.
4	CHASSIS Connector	A connection point for chassis ground. You can use this connector when operating on battery power to ground the chassis to the earth ground point in a system of interconnected instruments. Another chassis ground connection is on the front panel. (See the text in this section for more information about guarding and grounding.)
5	Line Cord Plug and Fuse Holder	Houses the ac line fuse and the male three-prong connector for an IEC-type power cord. The plastic cover fits over the fuse so it can be accessed only when the power cord is not connected.
6	Line Voltage Selector	Allows selection of four ac line voltage settings 100 V, 120 V, 220 V, and 240 V, each with a tolerance of 10 %. The accepted line frequencies are 50 Hz and 60 Hz.

원문: Fluke Calibration 732C / 734C 설명서 · 제조사 원문 자료입니다. 사양은 제조사 사정에 따라 변경될 수 있습니다.

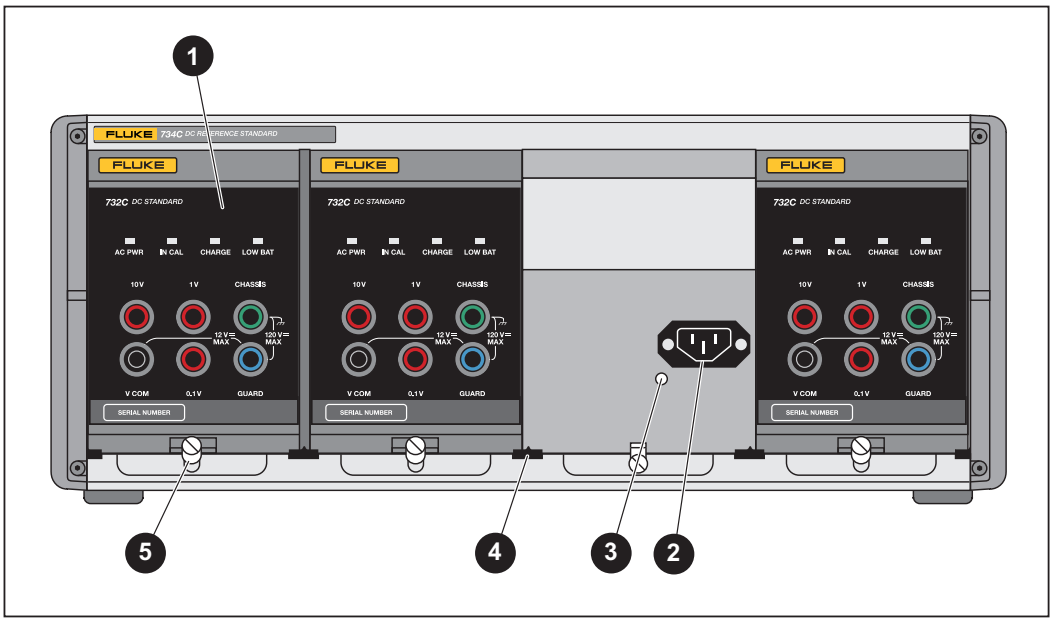

les009f.eps

Figure 8. 734C-7001 Instrument Enclosure Front Panel Features

Table 9. 734C-7001 Instrument Enclosure Front Panel Features

Item	Feature	Description
1	Instrument Bay	There are four instrument bays in the 734C-7001 Instrument Enclosure. Each holds one 732C or 732C-7001 unit.
2	AC Power Bus Connector	This internal connector automatically mates with the 732C or 732C-7001 rear panel ac power input when you install a 732C unit into the enclosure.
3	Alignment Pin	This alignment pin mates with an alignment hole on the rear panel of the 732C or 732C-7001. It ensures that the ac line connectors are aligned.
4	Guide	Guides separate each instrument bay.
5	Locking Lever	Tighten the screw to lock a 732C or 732C-7001 in place inside the instrument enclosure.

원문: Fluke Calibration 732C / 734C 설명서 · 제조사 원문 자료입니다. 사양은 제조사 사정에 따라 변경될 수 있습니다.

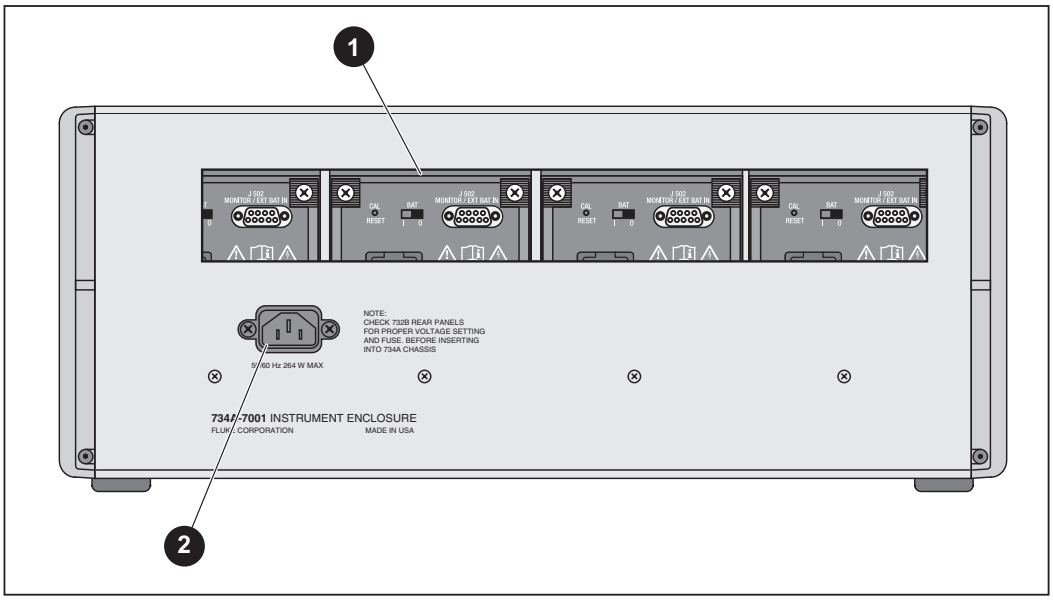

k10f.eps

Figure 9. 734C-7001 Instrument Enclosure Rear Panel Features

Table 10. 734C-7001 Instrument Enclosure Rear Panel Features

Item	Feature	Description
1	Access Window	This opening provides access to BAT switches and MONITOR/EXT BAT IN or EXT BAT OUT connectors on installed 732C or 732C-7001 units.
2	AC Line Input	IEC-type line cord male connector. All fusing is done in the individual installed 732C units.

Powering the Standard

The standard must remain powered continuously to maintain the state of calibration. The IN CAL indicator goes out if battery voltage has dropped too low, or if there has been a large change in oven temperature. Use ac line power at all times unless battery power is required for moving, shipping, or isolating the standard. Leave the BAT switch set to ∧ so it is available to power the standard in case of ac power interruption. Leaving the standard plugged into ac power also maintains full charge on the internal battery.

Switching between line power and battery power has no effect on the standard's output. Variations in ac line voltage within ±10 % of the line voltage setting change the 10 V output no more than 0.05 ppm. Variations in external dc power within the 12 V to 15 V range also change the 10 V output no more than 0.05 ppm.

When you remove the line power cord from a grounded receptacle, you can use the front panel GROUND binding post to connect the chassis to the same earth ground potential as other instruments in a system.

원문: Fluke Calibration 732C / 734C 설명서 · 제조사 원문 자료입니다. 사양은 제조사 사정에 따라 변경될 수 있습니다.

Setting the BAT Switch

⚠ Caution

To avoid loss of the state of calibration in case of ac power interruption, set the BAT switch to ⅄ (on). This enables battery backup power.

Leave the rear panel BAT switch set to ⅄ to enable proper battery charging, and to allow for automatic changeover to battery power in case of ac power interruption or failure.

If you set the BAT switch to **B**, the 732C requires continuous power from the ac line or an external dc source to operate. The following situations are the only times it is recommended that you set the BAT switch to **B**:

1. When you replace the battery. (Connect the standard to ac line power before you set the BAT switch to **B**.)
2. When you want to ship the unit cold (without battery power) and plan to calibrate the Product after restoring power..

For information about how to set the BAT switch on the 732C when you are using an external dc source such as the 732C-7001, see *Powering the Standard from a 732C-7001*.

Charging the Internal Battery

To completely recharge the internal battery in a 732C or 732C-7001 External Battery, unplug any external dc source from the rear panel. If the Product had been without power and is cold, then first make sure the BAT switch is set to the **B** position, and plug the unit into ac line power. Then return the BAT switch to the ⅄ position and let the Product charge for at least 36 hours. The charger applies a constant-current charge until the battery is at approximately 90 % capacity. During the constant-current charge, the CHARGE indicator is lit. The charger then switches to float-charging mode to complete and maintain the charge on the battery. In float-charging mode, the CHARGE indicator is extinguished.

The charger circuit is designed to charge the internal battery only. Do not attempt to charge an external battery through the rear panel MONITOR/EXT BAT IN connector. Use a separate charger to charge any external batteries, such as the charger inside the 732C-7001 External Battery and Charger.

원문: Fluke Calibration 732C / 734C 설명서 · 제조사 원문 자료입니다. 사양은 제조사 사정에 따라 변경될 수 있습니다.

Powering the Standard from a 732C-7001

Note

The 732C-7001 contains the same battery and charger as The 732C.

You can power the standard using an external battery such as the 732C-7001 External Battery/Charger, or other 12 to 15V dc source that can supply at least 300 mA. You connect the external dc source through the MONITOR/EXT BAT IN connector. Figure 10 shows a pinout diagram of the MONITOR/EXT BAT IN connector. Use this method if you need to operate the standard on battery power for a period longer than 72 hours. Or, if the preferred power source is 12 V dc to 15 V dc, you can use this method to power the standard permanently. Leave the 732C BAT the switch set to ⅄ to connect the internal and external batteries in parallel. Each battery is protected from high discharge into the other by current-limiting varistor. Set the 732C BAT switch to **B** to isolate the internal and external batteries. In this switch position, an external dc source connected to the MONITOR/EXT BAT IN input continues to power the 732C, but is isolated from the 732C's internal battery.

To power the standard using the 732C-7001, use this procedure. Use a similar procedure for any other 12 to 15V source.

1. Apply ac line power continuously to the 732C and the 732C-7001 during steps 2 through 7 of this procedure.
2. Verify that the BAT switches on both the 732C and 732C-7001 are set to ⅄.
3. Charge the 732C and 732C-7001 for at least 36 hours.
4. Switch both BAT switches to **B**.
5. Fabricate and connect a cable with a 9-pin connector on each end so that the battery output from the 732C-7001 is connected to the external dc input of the 732C. See Figures 10 and 11 for the connector pinouts.
6. Set the 732C-7001 BAT switch to ⅄ to enable its output.
7. Set the 732C BAT switch to ⅄ to connect the batteries in parallel.
8. After the ac line power to both the 732V and the 732C-7001 is turned off, the 732C can be powered by both batteries for at least 130 hours.

원문: Fluke Calibration 732C / 734C 설명서 · 제조사 원문 자료입니다. 사양은 제조사 사정에 따라 변경될 수 있습니다.

Replace the Internal Battery

If the battery fails to switch from constant-current charging mode to float-charging mode, the charger is defective, the battery needs replacement, or the wrong line voltage setting is selected. For preventive maintenance, it is recommended that you have the battery replaced every 18-24 months to ensure 72-hour battery backup time. See *Maintenance* for how to obtain the correct battery type and for the procedure to replace the battery.

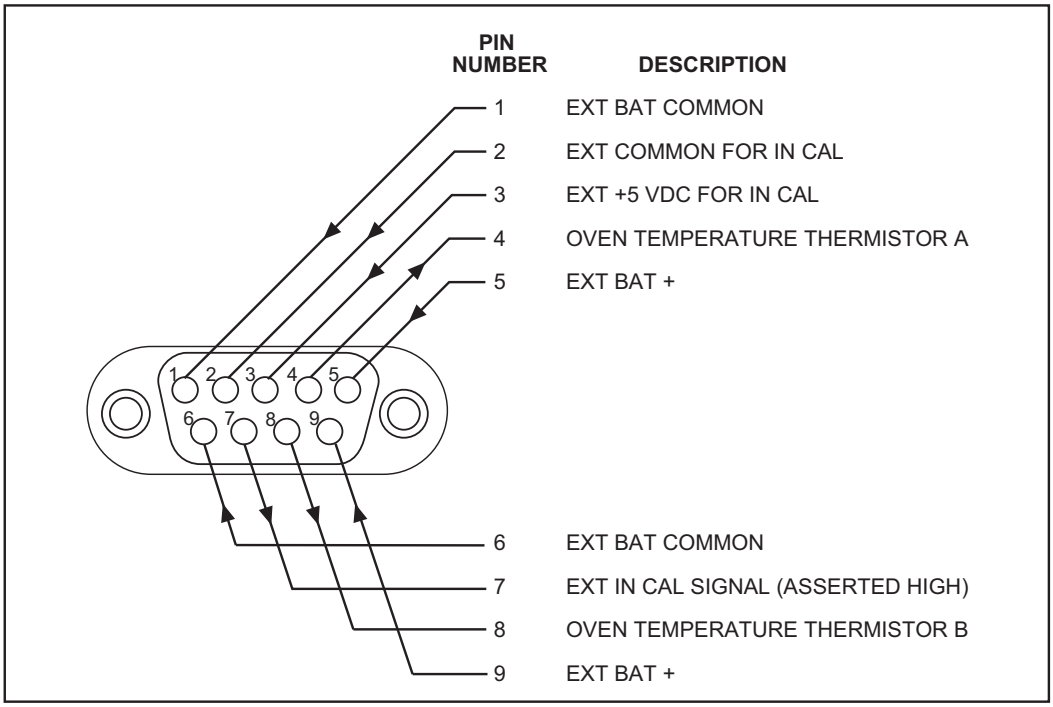

Figure 10. 732C MONITOR/EXT BAT IN Connector Pinout

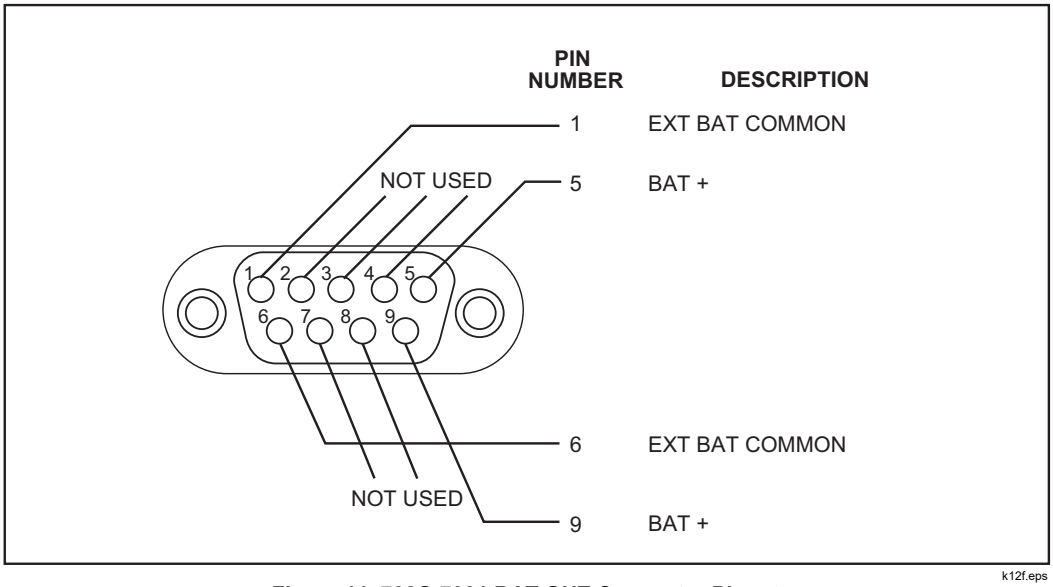

Figure 11. 732C-7001 BAT OUT Connector Pinout

⚠⚠Warning

To avoid explosion or fire, be careful not to short the battery terminals during battery replacement. Only qualified personnel should replace the battery.

Connecting Cables to the Output

⚠Caution

To avoid cracking or jamming the plastic binding post insulators, tighten them only with finger pressure. Do not use tools.

Shielded test leads should be used for connecting anything to the standard output binding posts. You can use banana plugs, spade lugs, or bare wire to attach cables to the binding posts. The best choice is shielded cables with low-thermal emf connectors such as Fluke 5440-7002 Low Thermal Cables. See "Thermal EMFs" further on in this section for more information. Figure 12 shows the cable connections for applying the 10V source required by the 5700A during its calibration procedure.

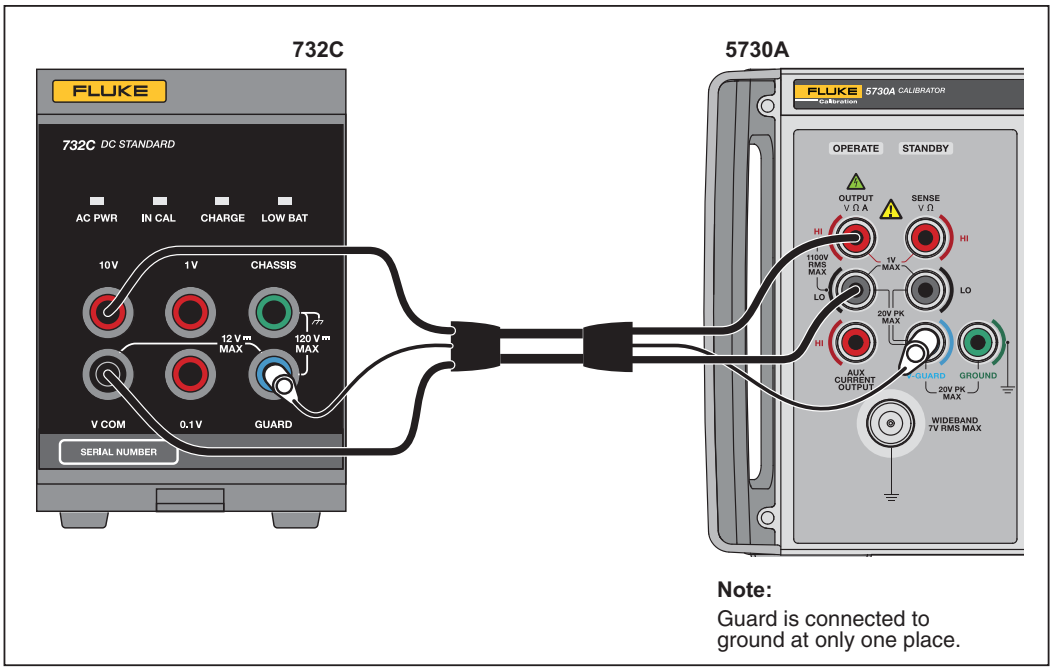

les013.eps

Figure 12. Typical 732C Cable Connections

원문: Fluke Calibration 732C / 734C 설명서 · 제조사 원문 자료입니다. 사양은 제조사 사정에 따라 변경될 수 있습니다.

Connecting the GUARD and GROUND

Note

Spurious currents in the COM (common) wires will degrade measurements at the accuracy level of the 732C. Make sure the GUARD terminals of all interconnected instruments are tied to earth ground at one point and one point only in the system, and all LO or COM terminals are tied to GUARD at only one point in the system.

Use the GUARD connection when any of the following conditions exists:

1. When a potential exists between equipment and a power line ground.
2. When you use long connection leads to connect a high-impedance load.
3. When you are operating the standard in a high EMI environment.
4. To avoid the effects of electrostatic charge buildup on people.

The GUARD is an electrical shield around the sensitive analog circuitry, insulated from chassis ground and the rest of the standard. The GUARD provides a low-impedance path for common-mode noise and ground currents. The guard eliminates the chance of ground currents in the signal leads caused by plugging the line cord into an ac outlet at a different ground potential than the chassis ground of the interconnected instruments.

Ground currents can occur if instrument guards are not connected properly, resulting in annoying and often subtle measurement errors. The basic rule is, in any system of measurement instruments, the guards within all instruments should be grounded at one and one point only. Circuit common (V COM) should be electrically connected to the other instrument guards at one and only one point as well, preferably at the same location the guards are grounded. If an instrument in the system has a grounded input or output, select it as the common earth ground point for all guards in the system.

Figure 3-9 shows a connection to the GUARD binding post. The GUARD is used in that setup to prevent spurious ground currents from degrading the accuracy of the measurement taking place.

Note

For best results, connect GUARDS to GROUND in a star configuration. Connect a separate lead between each instrument's GUARD to the common GROUND. Do not connect GUARDS in a daisy-chain configuration.

With line power disconnected, you can confirm the integrity of your guarding and grounding scheme by checking each instrument with an ohmmeter to find hidden or internal connections between guard, common, and ground. If you have any question about proper guarding and grounding, draw a guarding diagram for your system of instruments, and make sure all instrument guards are tied together and grounded at only one point.

For more information about grounding and guarding, suggested references are Fluke Calibration: Philosophy in Practice, Second Edition ISBN 0-9638650-0-5 and Grounding and Shielding Techniques in Instrumentation, by Ralph Morrison, ©1977, John Wiley & Sons; and Noise Reduction Techniques in Electronic Systems by Henry W. Ott, ©1976, John Wiley & Sons.

원문: Fluke Calibration 732C / 734C 설명서 · 제조사 원문 자료입니다. 사양은 제조사 사정에 따라 변경될 수 있습니다.

Monitoring Oven Temperature

As shown in Figure 10, MONITOR/EXT BAT IN pins 4 and 8 connect to the two terminals of the oven temperature thermistor. To monitor the oven temperature, measure the resistance between these two pins. The nominal resistance at normal operating temperature is between 36.5 kΩ and 42.5 kΩ. The resistance should change with time by no more than 900Ω per year. The TC (temperature coefficient) of the thermistor is approximately 2 kΩ per °C.

You can use this measurement to gain confidence that oven temperature regulation is working during changes in ambient temperature. Your observations of the thermistor resistance will reveal when the ambient temperature changes are too extreme for the oven temperature regulation circuitry to work properly.

Resetting the IN CAL Indicator

If the IN CAL indicator is off, the 732C may not meet its specifications. The indicator goes off if power to the battery voltage has dropped too low, or if the oven temperature has gone too high or too low. If IN CAL trips off, you will need to recalibrate the 732C, or verify its output before you reset the IN CAL indicator. See *Maintenance* for the procedure to calibrate the standard and reset the IN CAL indicator.

Monitoring The IN CAL Indicator State Remotely

As shown in Figure 10, three of the MONITOR/EXT BAT IN pins are connection points for monitoring the state of the IN CAL indicator. Figure 13 illustrates the IN CAL status output circuit inside the 732C. Proceed as follows to use this connector to remotely monitor the IN CAL indicator:

1. Connect an external +5V logic level to pin 3 (common to pin 2).
2. With a 10 kΩ pull-up resistor between pins 3 and 7, monitor the TTL-level signal on pin 7 with respect to pin 2. A high state on pin 7 corresponds to the front panel IN CAL indicator being lit. A low state on pin 7 corresponds to the front panel IN CAL indicator being off.

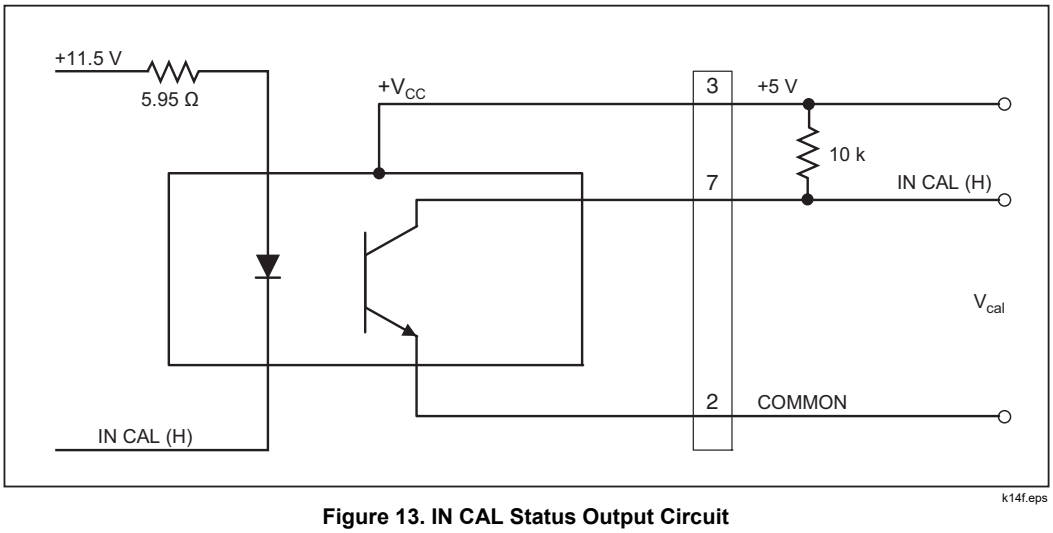

Figure 13. IN CAL Status Output Circuit

원문: Fluke Calibration 732C / 734C 설명서 · 제조사 원문 자료입니다. 사양은 제조사 사정에 따라 변경될 수 있습니다.

Monitoring Long-Term Stability

You can determine the long-term stability of the standard by periodically comparing the output voltage to a known reference standard or group of reference standards and plotting the difference on a control chart. Output voltage drift, with respect to the legal volt, may be positive or negative and is a characteristic of the individual 732C. Accumulated test data have shown that, once established, the measured drift is generally linear, provided the instrument continues to receive uninterrupted operating power. When drift rate is established, extrapolations of output voltage are possible, and allow certification of the standard with lower uncertainty than is obtainable from the stability specifications alone.

A convenient method of performing the needed periodic calibration is to use the Fluke Direct Voltage Measurement Program, Option 732C-200 (described earlier), which provides calibration against a traceable reference standard in your own laboratory.

Note

A paper has been published that describes a technique for characterizing drift rate of solid state dc voltage references. See Maintain 10VDC at 0.3ppm or better in your laboratory *by Ray Kletke on the Fluke Calibration website.*

Due to the possibility of undetected damage or malfunction, there is a risk involved in relying completely on any single standard. This risk is reduced significantly by using two or more independent standards (with frequent comparisons) to ensure that all are stable within the range of expected normal deviations. An added advantage of having multiple, independent standards is the opportunity to use a statistical average of the individual outputs. You can use multiple 732C 10V, 1V, or 0.1V outputs, such as obtained with 734C, in this way to gain statistical improvements of your standard's uncertainty.

Minimizing Error Sources

You can inadvertently defeat the low uncertainty of the 732C output if you do not take proper care to avoid error sources. Errors can occur from the effects of thermal emfs, lead and connection resistance, and other sources.

Note

Most importantly, always repeat measurements until you are satisfied that the results are repeatable relative to the specification being measured.

Mechanically Induced Errors

To avoid changing connector contact resistance and degrading the measurement, do not change the stresses on the connectors or cables. Try not to move, jostle, or vibrate the standard or any attached equipment during measurements.

원문: Fluke Calibration 732C / 734C 설명서 · 제조사 원문 자료입니다. 사양은 제조사 사정에 따라 변경될 수 있습니다.

Thermal EMFs

When dissimilar metals at different temperatures come into contact, a thermal voltage is induced. Thermal voltages can exceed 10 µV. All it takes to induce a thermal emf error and adversely affect a measurement is to briefly touch and thereby warm a connector or binding post. Typically, it takes five minutes to thermally stabilize a connection after it has been touched. In addition, use the following techniques to avoid thermal emf errors:

1. Use the Fluke 5440A-7002 Low Thermal EMF Cable Set.
2. Use #24 AWG or larger, bare copper, Teflon\R-insulated connecting wires. It is preferable to use shielded, twisted pair cable. Avoid splices.
3. Avoid the use of ordinary, nickel-plated, banana plugs for equipment interconnections. Use metals that have small thermal emfs with respect to copper.
4. Use low thermal emf copper spade lugs. Crimp the lug onto the wire and solder the connection. Loosen the top of the binding post, insert the lug, and tighten the binding post on the lug with fingers only.

Output Cable Loading

The assigned value of each output is guaranteed at the binding posts. A voltage drop in test leads can cause a loading error. See Figure 14. In this example, the 1 kΩ load sees a 2 mV degradation of the 10 V output. To reduce loading errors in applications where low-impedance loads are unavoidable, use lower resistance test leads (shorter and heavier gauge).

Digital multimeters usually have much higher impedance than 1 kΩ. Most DMMs have a 10 MΩ input impedance. On the 20 V dc range, Fluke Calibration 8508A and older 8840A, 8505A, and 8506A DMMs present a load impedance higher than 10,000 MΩ. The Fluke 8845A and 8846A DMMs provide a high-input impedance selection on their 10 V dc and lower-input ranges that should be selected. For a DMM with a 10 MΩ input impedance, the loading error would be 0.2 µV. For a DMM with a 10,000 MΩ input impedance, there is no significant loading error.

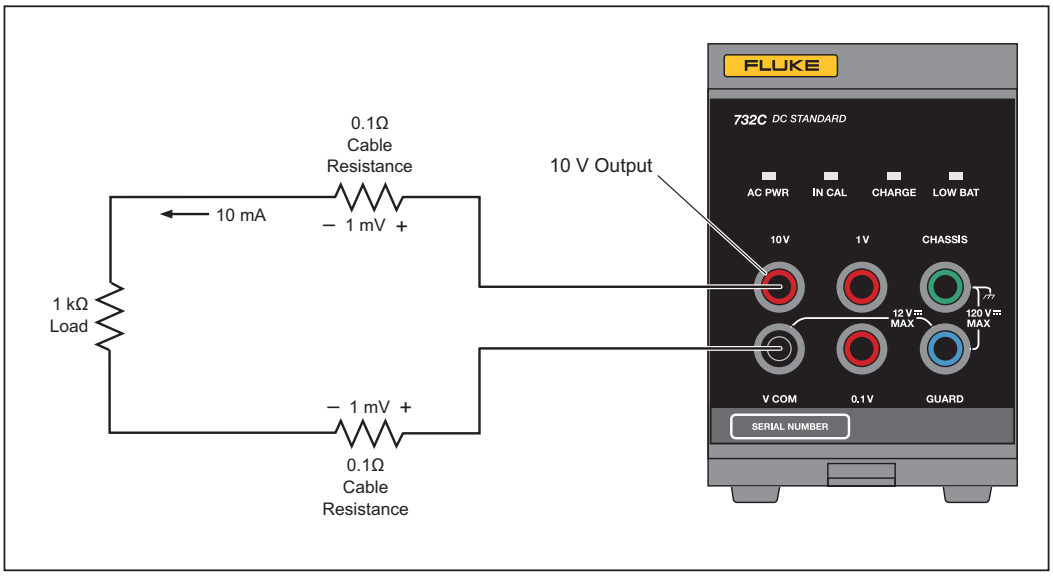

les0015.eps

Figure 14. Loading Error Example

Theory of Operation

This section presents theory of operation for 734C, 732C, and 732C-7001. The section begins with an overall functional description that describes basic theory for each of the three instrument models covered by this manual. The functional description explains how 734C and 732C-7001 relate to the 732C DC Standard.

Following the functional description is a more detailed circuit description of the 732C Standard. An overall 732C block diagram is supplied.

Note

Although theory is provided, no troubleshooting information or parts breakdowns are provided for components and assemblies inside the oven (the small box within the foam insulation) or the major board assemblies. In order to guarantee the output specification, reference assemblies are not repairable. A faulty reference must be replaced as a whole unit. Refer to the Replaceable Parts List for part number identification and ordering information.

Overall Functional Description

The 732C is a highly stable 10 V dc sourcing circuit to be used as a standards laboratory primary dc voltage reference. Refer to Figure 15 for an overall block diagram.

The heart of the 10 V reference is a pretested, selected reference amplifier (Ref Amp) and precision trimmed resistors. The reference circuit is inside a temperature-controlled oven. The oven temperature controller is a voltage-to-temperature closed loop amplifier.

A precision thermistor mounted close to the reference amplifier lets you monitor changes in the oven temperature through the rear panel MONITOR/EXT BAT IN connector. Instructions for using this connector are detailed in *Operation*. At operating oven temperature, the thermistor resistance is approximately 41.3 kΩ.

Four front panel indicators show operating status. The Power Supply (A5 Battery Charger) assembly lights the AC PWR indicator when the 732C is connected to ac line power. The Power Supply also controls the IN CAL indicator to warn that an excessively large drop in 11.5 V operating voltage or a large change in oven temperature has occurred.

Another circuit on the Power Supply monitors the battery voltage and controls the LOW BAT indicator. A timer IC on the Front Panel assembly (mounted on the binding posts) serves as an oscillator for LOW BAT causing it to blink.

The dual-mode charger lights the CHARGE indicator when in the constant-current (high-charge) mode. The charger turns off the CHARGE indicator and switches to a float-charge mode when the battery is charged to approximately 90 % capacity. The float charge completes and maintains full charge.

원문: Fluke Calibration 732C / 734C 설명서 · 제조사 원문 자료입니다. 사양은 제조사 사정에 따라 변경될 수 있습니다.

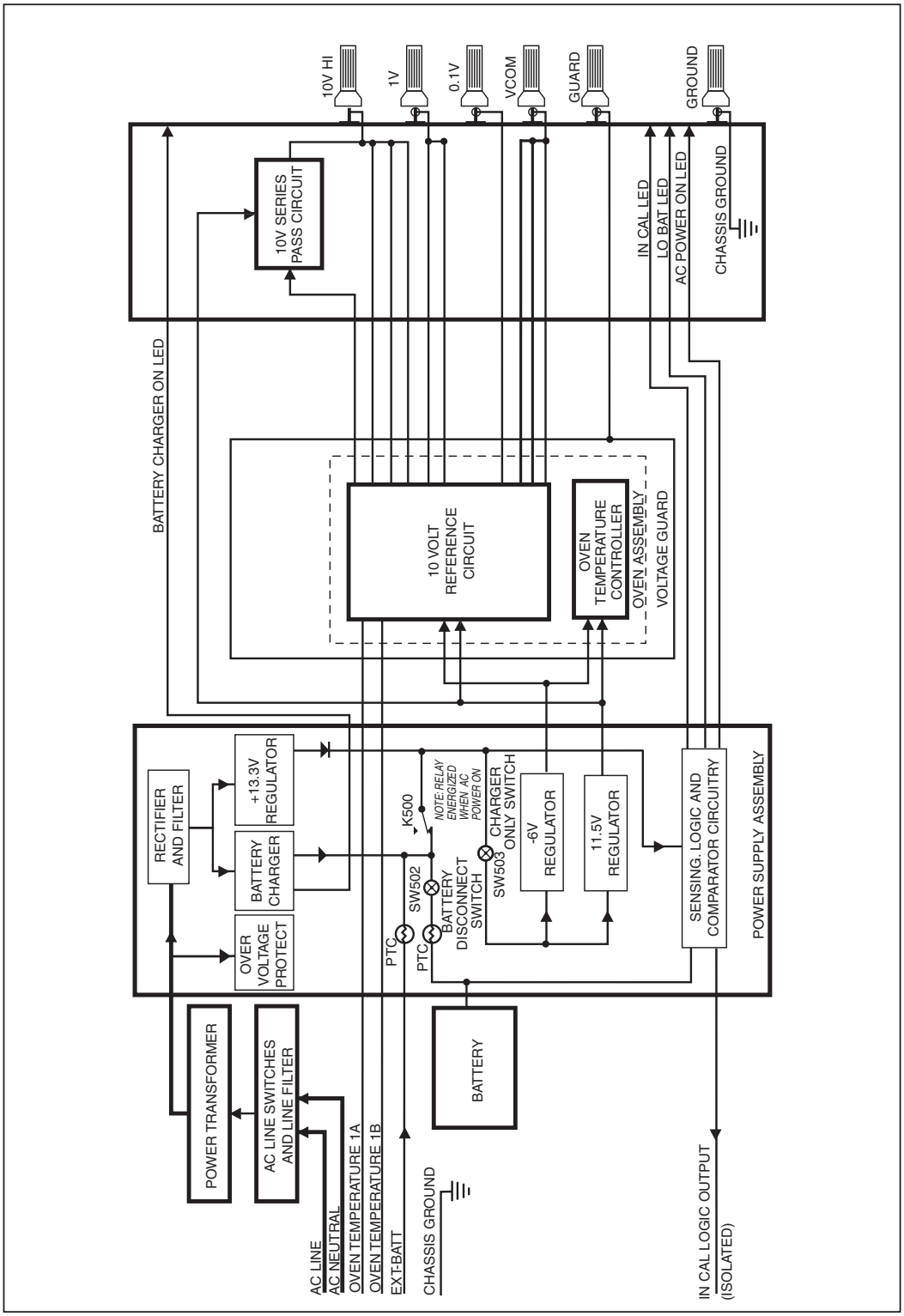

Figure 15. 732C Overall Block Diagram

원문: Fluke Calibration 732C / 734C 설명서 · 제조사 원문 자료입니다. 사양은 제조사 사정에 따라 변경될 수 있습니다.

734C Functional Description

The 734C consists of four 732C DC Standards installed in a 734C-7001 Instrument Enclosure. The 734C-7001 enclosure contains four internal IEC-type ac line cord connectors and one rear panel IEC-type ac line cord connector. When you slide a 732C or 732C-7001 into one of the instrument bays in the chassis, it automatically connects to the ac power bus. The 734C-7001 Instrument Enclosure provides an ac line power bus only. There is no fuse in the 734C-7001. All fusing and line voltage selection is done in the installed 732Cs and 732C-7001s.

732C-7001 External Battery/Power Supply

The 732C-7001 is a companion battery and charger for use with the 732C when the there is a requirement for more than 72 hours of portable (battery) operation. The 732C-7001 contains the same battery charger assembly (A5) and gelled-electrolyte sealed lead-acid battery as the 732C. Theory in this section pertaining to the 732C DC Standard's battery charger also applies to the 732C-7001.

On the 732C-7001, there are no front panel binding posts, and there is no IN CAL indicator. On the rear panel, there is no CAL RESET hole, and the connector labeled MONITOR/EXT BAT IN on the 732C is labeled BAT OUT. For rear panel BAT OUT connector pinout, refer to Figure 11.

732C Assembly Description

The A1 and A5 assemblies in the 732C are described in more detail in the rest of this section.

A1 Front Panel Assembly

The Front Panel assembly contains the following two functional blocks:

1. LED Circuitry
2. Overvoltage Protection Components

The LED Circuitry includes the LEDs and the drive circuitry for the following front panel indicators:

- AC PWR: When lit, this indicates that ac line power is applied to the 732C.
- CHARGE: When lit, this indicates that the battery charger is in the constant current mode (high level charging) as opposed to the float charge mode.
- IN CAL: Normally lit. This indicator tells the user that the standard oven temperature is within the limits of 35 °C to 55 °C and that operating power has not been interrupted.
- LOW BAT: Normally off. It blinks at a 1 Hz rate when the battery voltage drops below +11.4 V, indicating that the user should immediately plug the standard into ac line power to begin recharging the battery.

The overvoltage protection circuitry includes a power diode and "Transzorb" transient suppressor devices between the 10V and 1V outputs and V COM, and a spark gap from the V COM binding post to chassis ground.

원문: Fluke Calibration 732C / 734C 설명서 · 제조사 원문 자료입니다. 사양은 제조사 사정에 따라 변경될 수 있습니다.

Power Supplies and Battery Charger Assembly A5

See Figure 16 for the following discussion. The Power Supply Module (A5) contains several functional circuit groups as listed below:

- Overvoltage Protection Circuitry
- Raw DC Power Supply
- Battery Charger
- +11.5 V Preregulator
- +11.5 V Low-Dropout Regulator
- -6 V Power Supply
- IN-CAL Logic
- LED Drive Circuitry
- AC to Battery Switching Circuit
- Battery Circuit
- Rear Panel Connections

Overvoltage Protection Circuitry

The 732C has overvoltage protection circuitry in the event that the user has the ac voltage select switch set for 100 V ac or 120 V ac and connects the ac input lines to 180V ac or greater. In this case, there is circuitry to short the secondary of the transformer and blow the main fuse in the Line Filter assembly.

Raw DC Power Supply

A bridge rectifier rectifies secondary ac from the transformer. Capacitors then filter the voltage to provide raw dc at the input of the regulators.

Battery Charger

The battery charger for the 732C is a dual mode charger. The charger operates as a constant current source for a fast charge until the battery is approximately 90 % charged. Then the charger circuitry switches to a voltage source for the remainder of the charge and for a float charge.

+11.5 V Preregulator

The +11.5 V power supply is composed of two regulators. The first is the +11.5 V Preregulator that converts the raw dc into +13.3 V nominal. The second regulator converts this +13.3 V or the battery voltage into a precisely controlled +11.5 V for the 10 V reference circuitry.

Charger Only Switch

A SW503 has been added to the 732C so that most of the non-battery-charger loads can be switched off for battery charger efficiency testing. This switch is user-controlled and switches off Product functionality that is not required to charge the battery. Full battery charging functionality is maintained with the switch in either position. Note that switching SW503 to the "CHGR ONLY" position removes power from the 732C oven, allowing it to cool down, and causing the IN CAL LED to go out and the 732C calibration to be lost. Normal instrument operation is with the slide switch in the "732" position.

원문: Fluke Calibration 732C / 734C 설명서 · 제조사 원문 자료입니다. 사양은 제조사 사정에 따라 변경될 수 있습니다.

+11.5 V Low-Dropout Regulator

The Low-Dropout Regulator provides an accurate +11.5 V to the Reference Amplifier and Oven Temperature Control circuitry inside the oven. To maximize the battery life of the standard, it is necessary to have the least voltage drop possible between the battery and the oven circuitry.

-6 V Power Supply

The -6 V power supply is used for the current cancellation circuit in the Reference Amplifier and for the Oven Temperature Control circuit. Both of these are inside the oven.

IN CAL Logic

The 732C has an indicator on the front panel for IN CAL. This indicates that the oven temperature has remained between about 35 °C and 55 °C and that the voltage measured at the battery has not been reduced below 11.2 V dc. If the oven temperature is in the correct range, pressing the rear panel CAL RESET switch resets (lights) the IN CAL indicator.

The IN CAL indicator stays lit unless the oven temperature drifts out of the allowable range, or if battery voltage drops too low. This mechanism monitors for defects in the oven control, and warns the user when the standard is not considered to be in calibration.

LED Drive Logic

In addition to the IN CAL indicator, there are three other indicators on the front panel:

- AC PWR
- CHARGE
- LOW BAT

The AC PWR LED is switched on if ac line power is applied to the standard.

The CHARGE LED will be on if ac line power is applied to the standard and the battery charger is in the constant current mode or high charge rate mode. If there is a mode change or if the ac line power is removed, the LED goes out.

The LOW BAT LED begins blinking at a 1-Hz rate if the battery voltage drops below about 11.3 V. The oscillator circuitry is on the front panel assembly. The circuitry on the power supply assembly simply turns the oscillator on or off.

AC Power to Battery Power Switching Circuitry

If the rear panel BAT switch is set to ⅄, and ac line power is removed from the 732C, the battery is connected to the Low-Dropout Regulator to provide uninterrupted power for the +11.5 V supply.

Battery Circuit

The battery is a 12 V 6.5 amp or 7.0 amp-hour sealed lead acid battery. If the battery is fully charged, it provides at least 72 hours of standard operation (with 10 V output current limited to ≤0.1 mA) at an ambient temperature of 25 °C. The battery is connected to the power supply assembly by a two-wire cable. There is protection for the battery in the form of a diode and PTC thermistors RT502 (for an external battery) and RT503 (for the internal battery).

The diode protects the circuitry on the power supply assembly in case the battery leads are mistakenly reversed. Switch SW502 disconnects the battery for shipping the standard cold (with operating power turned off).

원문: Fluke Calibration 732C / 734C 설명서 · 제조사 원문 자료입니다. 사양은 제조사 사정에 따라 변경될 수 있습니다.

Rear Panel Connections

There are several input and output connections on the rear panel of the 732C. The most obvious are the ac line power and GROUND inputs. The rear panel also has an access hole for actuating the CAL RESET switch and a 9-pin connector labeled MONITOR/EXT BAT IN. The connector provides for attaching an external battery or other 12 V to 15 V dc source, for monitoring the oven temperature, and for remotely monitoring the IN CAL indicator status. See Figure 10 for its pinout. Figure 11 shows the pinout for the rear panel BAT OUT connector on the 732C-7001.

Low-Battery Shutdown Circuitry

Sealed lead-acid batteries such as are used in this instrument are very susceptible to damage and/or decreased capacity if subjected to deep discharge. To prevent this from occurring, battery power is turned off when the voltage decreases to the level that coincides with loss of IN CAL.

The battery voltage quickly recovers to approximately 11.5 V, but the latching action of the circuitry prevents the instrument from turning on again. At this point it is necessary to reconnect the instrument to the ac mains voltage in order to restore operation.

The IN CAL annunciator will be off and can be reset by SW501 only if the oven temperature is within limits, with the time required to reach this condition dependent on how long the instrument remained unpowered.

Maintenance

⚠⚠ Warning

Servicing described in this section is to be done by qualified personnel only. To avoid electric shock or fire, do not service the 732C unless you are qualified to do so.

This section explains how to calibrate the 732C and how to do other maintenance tasks. You can also return the 732C to Fluke for recalibration and certification.

Service Information

The 732C is warranted for a period of 1 year on delivery to the original purchaser. The Warranty is located on the reverse side of the title page at the front of this manual.

Factory authorized calibration and service for Fluke products is offered at various worldwide locations. See *Contact Fluke Calibration*. See *Service and Reshipment Information*.

Replacing the Fuse

See *Installation* for the fuse access procedure.

원문: Fluke Calibration 732C / 734C 설명서 · 제조사 원문 자료입니다. 사양은 제조사 사정에 따라 변경될 수 있습니다.

TS-TL-FLK-056

we measure, we calibrate, we validate.
㈜테솔 · www.tessol.com TS-TL-FLK-056 42 / 64
KOLAS 국제공인교정기관 · ISO/IEC 17025

Cleaning the External Surfaces

⚠Caution

To prevent possible damage to the surfaces of the standard, do not use aromatic hydrocarbons or chlorinated solvents for cleaning.

When the 732C is properly cared for and kept in a controlled atmosphere, you seldom need to clean it. However, any contamination, particularly oil, on the Product can create leakage paths that can degrade accuracy.

To keep the standard looking like new, clean the case with a soft cloth slightly dampened with water or a non-abrasive mild cleaning solution that does not harm painted surfaces or plastics. Do not attempt to clean the interior of the instrument.

Calibration

Complete the following procedure to transfer the values of a Calibrated 732C to another 732C. Battery operation of the 732C Device Under Test (DUT) is preferred.

Equipment

- Keithley 2182A Nanovoltmeter
- Calibrated 732C with certificate

⚠Caution

Tighten the binding posts only with finger pressure to avoid damage to the post. Do not use tools to tighten.

Procedure

1. Connect the DUT, calibrated 732C and meter as shown in Figure 16.
2. Monitor the meter readings and allow the thermals to stabilize. This takes a minimum of 5 minutes.
3. Average the meter readings over a period of at least 1 minute. Record these values.
4. Reverse the HI and LO (positive and negative) leads on the meter.
5. Monitor the meter readings and allow the thermals to stabilize. This takes a minimum of 5 minutes.
6. Average the meter readings over a period of at least 1 minute. Record these values.
7. Subtract the readings from step 6 from the readings from step 3 and divide this result by 2. This is the difference between the two devices. The value could be negative.
8. Add the value from step 7 to the value from the certificate for the calibrated 732C. This is the value of the DUT.
9. Repeat the above procedure for each voltage level. Continue to step 10 once each voltage level is calibrated.
10. If the IN CAL LED is off, push the switch inside the RESET hole located on the rear panel.
11. Disconnect all test equipment. Cover the reset hole with a tamper-proof seal.

Calibration of the 732C is complete.

원문: Fluke Calibration 732C / 734C 설명서 · 제조사 원문 자료입니다. 사양은 제조사 사정에 따라 변경될 수 있습니다.

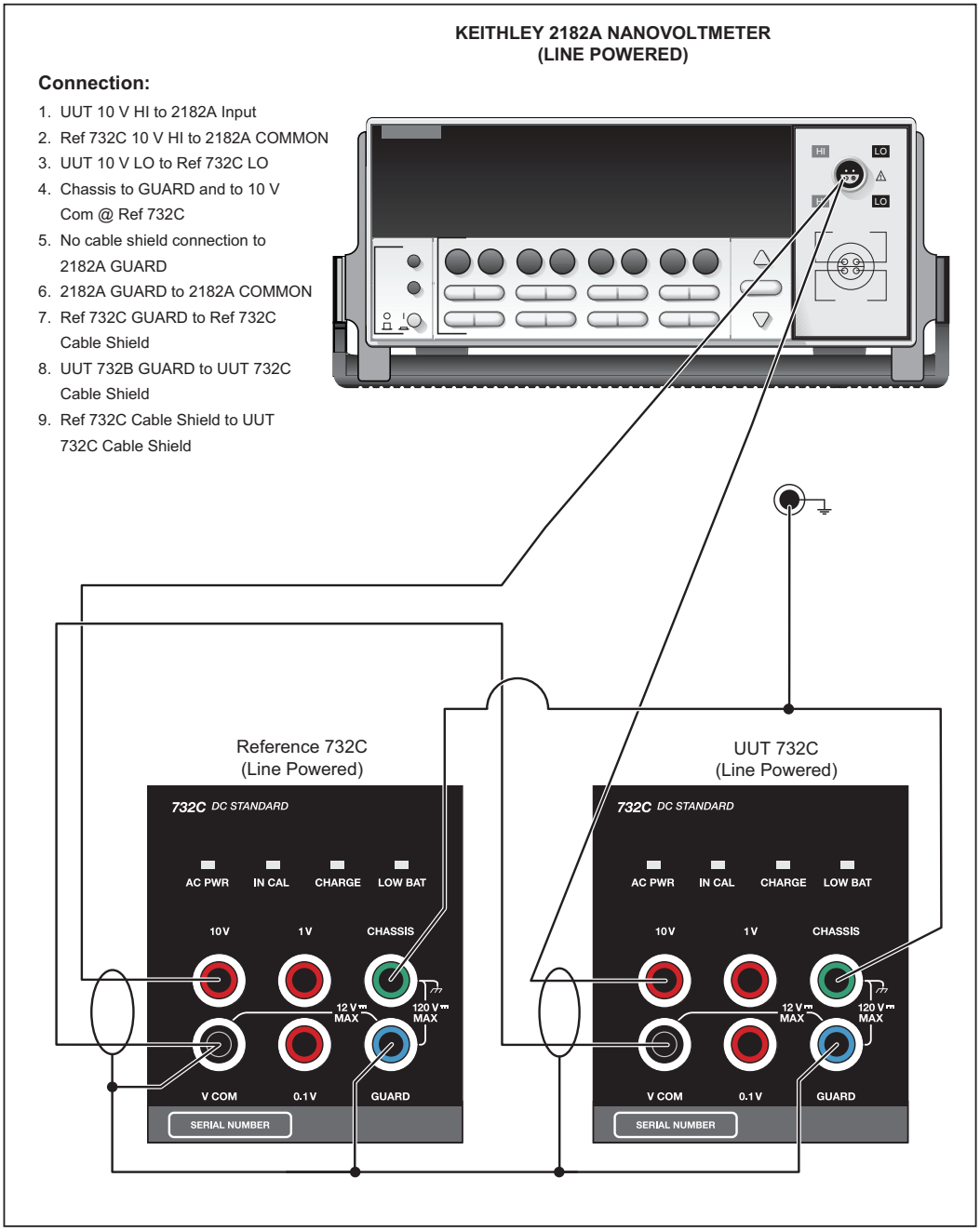

Figure 16. Output Calibration Connections

원문: Fluke Calibration 732C / 734C 설명서 · 제조사 원문 자료입니다. 사양은 제조사 사정에 따라 변경될 수 있습니다.

Access Procedures

Procedures to access the battery, the oven assembly, the A5 Battery Charger/Power Supply, and the power transformer follow. No access procedure is provided for components and assemblies inside the oven assembly. The oven assembly contains no user-serviceable parts, and must be replaced as a unit in case of failure. This unit is the small box inside the foam insulation, and it includes the attached flex circuit.

Initial Access Procedure

See Figure 17 and proceed as follows to remove the 732C cover and prepare to access internal components:

⚠⚠Warning

To avoid explosion or fire, be careful not to short the battery terminals.

1. Remove the ac line cord from the rear panel.
2. Remove the six screws that fasten the top cover to the chassis. Three screws are located on each side of the instrument cover near the bottom.
3. Lift off the top cover.

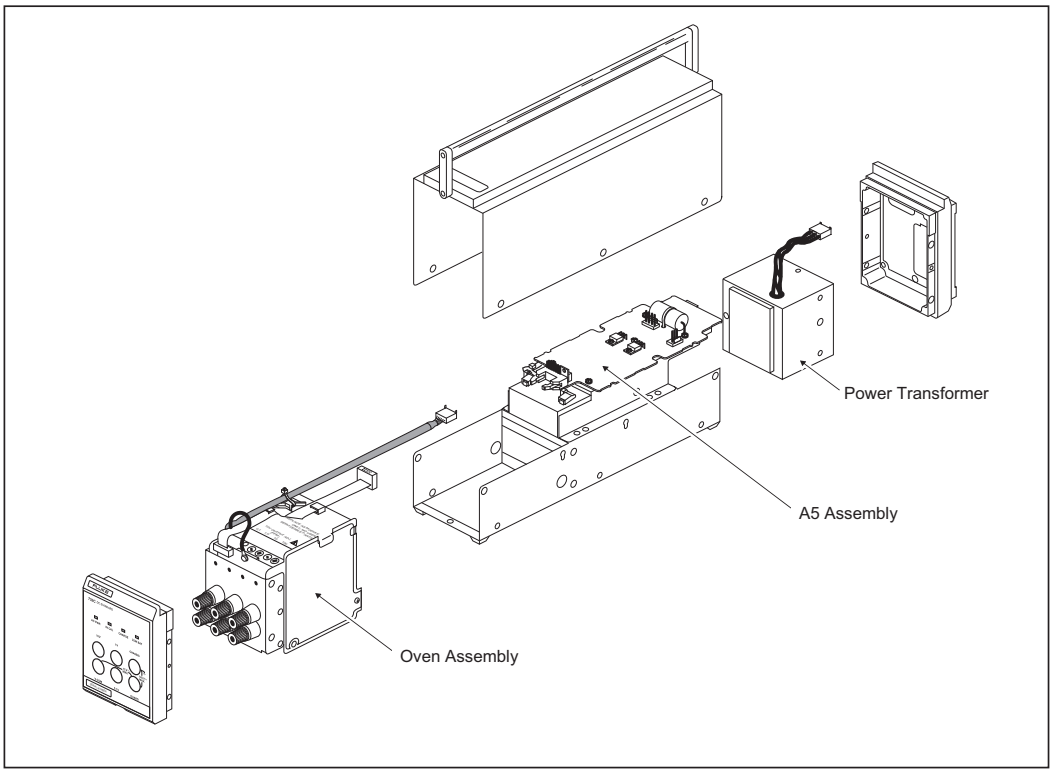

les021.eps

Figure 17. Accessing Internal Components

Replacing the Battery

For preventive maintenance, replace the battery every 18 months to 24 months if the 72 hour battery backup time is important. If the battery fails to switch from high-current charging mode to trickle voltage mode, either the charger is defective or the battery needs replacement. Troubleshooting procedures for the A5 Battery Charger are presented further on in thsis section.

The correct battery is available from Fluke Calibration by ordering Fluke Calibration P/N 887042. See Figure 18 and proceed as follows to replace the battery:

⚠⚠Warning

Wear eye protection. Use extreme care not to short the battery terminals. The battery may explode if shorted.

1. Leave the ac power on to maintain calibration. Remove any cables connected to the MONITOR/EXT BAT IN connector.
2. Set the rear panel BAT switch to **B**.
3. Remove the six screws that fasten the top cover and remove the cover.
4. Disconnect the 4-pin, 2-wire connector from the battery where it connects to the A5 assembly.
5. Free the ribbon cable that comes from the front panel from its hold-down guides, **leaving it connected to the A5 assembly**.

   The “IN CAL” indicator on the front panel will no longer be illuminated. This does not affect the reference if you do not remove the Mains Power from the instrument.
6. Pull off the red battery terminal lead.
7. Remove the four screws that fasten the battery hold-down bracket (which supports the A5) to the chassis.
8. Wiggle the battery hold-down bracket until it breaks loose from the foam backing.
9. Lift the front edge of the battery hold-down bracket as shown in view A of Figure 18.
10. Pull the battery hold-down bracket forward until it clears the rear bezel, then rotate it 90° and position it in the keyholes as shown in view B of Figure 18.
11. Disconnect the black battery terminal lead and lift out the battery.
12. Put a new battery in place.
13. Connect the black battery terminal lead only.
14. Slide the battery hold-down bracket in at the rear first as it came out, drop it into place, and check for pinched wires.

원문: Fluke Calibration 732C / 734C 설명서 · 제조사 원문 자료입니다. 사양은 제조사 사정에 따라 변경될 수 있습니다.

15. Install the four battery hold-down bracket screws loosely first, then tighten them.
16. Reconnect the red battery terminal lead.
17. Reconnect the 4-pin connector from the battery to the A5 assembly. (Verify correct polarity.)
18. Hook the ribbon cable that comes from the front panel under its two guides.
19. Check all connections for tightness.
20. Reinstall the top cover.
21. Set the BAT switch to the ⅄ position.
22. Reset the CAL switch by pushing the button accessible through the rear panel CAL RESET hole with an insulated probe.
23. Verify that the IN CAL indicator remains lit.
24. Keep ac line power on for normal operation.

원문: Fluke Calibration 732C / 734C 설명서 · 제조사 원문 자료입니다. 사양은 제조사 사정에 따라 변경될 수 있습니다.

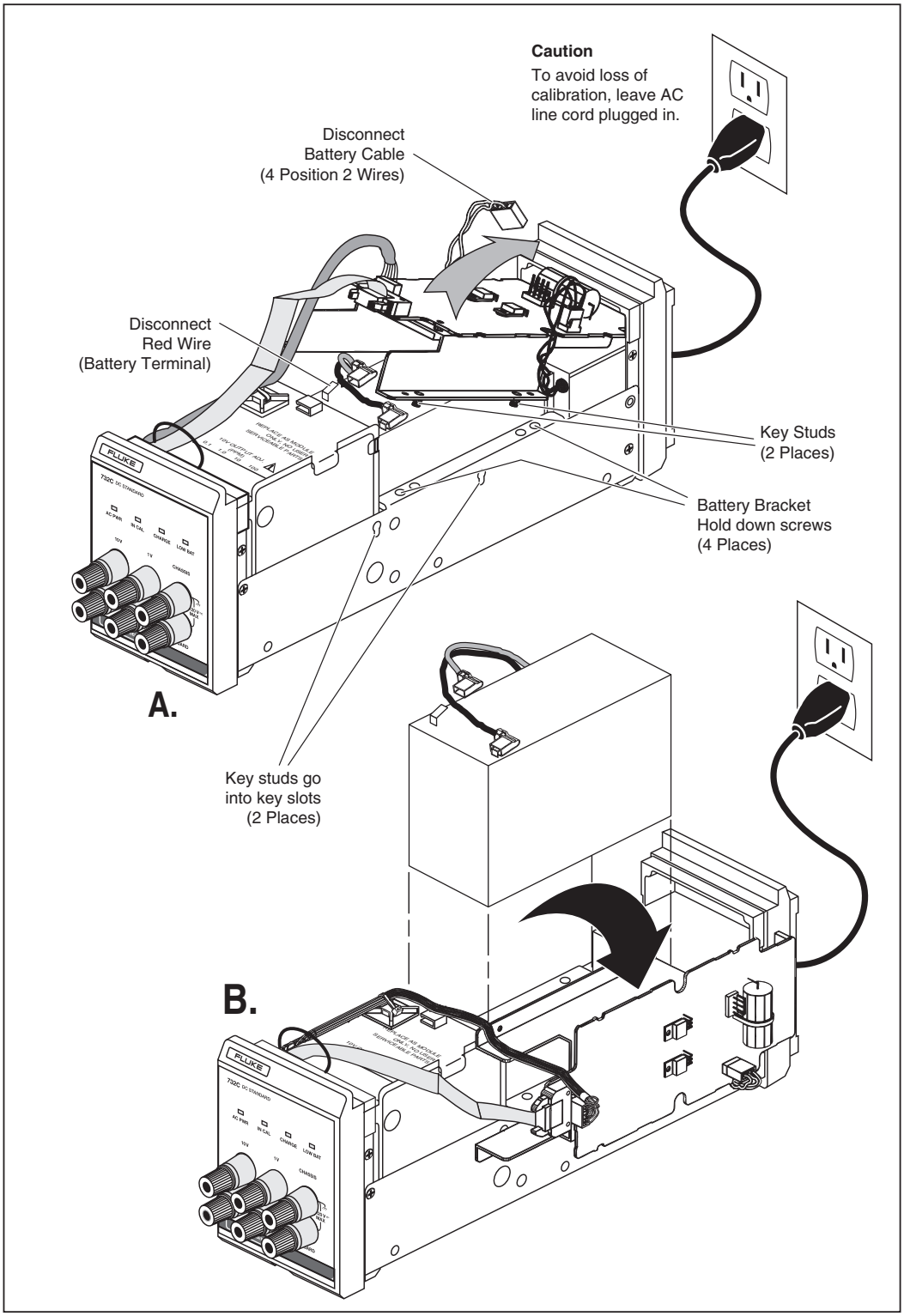

les022.eps

Figure 18. Replacing the Battery

원문: Fluke Calibration 732C / 734C 설명서 · 제조사 원문 자료입니다. 사양은 제조사 사정에 따라 변경될 수 있습니다.

Replacing the Oven Assembly

See *Troubleshooting* to confirm the necessity of replacing the oven (reference) assembly. Assembled and tested reference assemblies are available from Fluke Calibration as P/N 4862764. To replace the oven assembly, which contains the 10 V reference circuitry, proceed as follows:

1. Do the steps under *Initial Access Procedure*.
2. Disconnect the two cables that are attached to the A5 assembly at the oven assembly.
3. See Figure 17 and remove the three screws that fasten the front panel and oven to the chassis (one on each side and one on the bottom).
4. Remove the four screws (two on each side) that fasten the oven to the front panel bezel.
5. Remove the oven assembly. See the parts list illustration for the 732C Final Assembly for further breakdown information.
6. Reverse the steps to install a new oven assembly.

Accessing the A5 Battery Charger

Proceed as follows to access A5 Battery Charger/Power Supply assembly for troubleshooting or replacement.

1. Do the steps under *Initial Access Procedure*.
2. To remove the A5 assembly, disconnect all four cables from the board.
3. Remove the two screws that fasten the U504 and U500 TO-220 packages to the battery hold-down bracket.
4. Remove the five screws that fasten the A5 assembly to the battery hold-down bracket.
5. Remove the A5 assembly. Be careful not to lose the four insulators from step 4.
6. When you reinstall the A5 assembly, reinstall the screws through the tabs on U504 and U500 before you reinstall the rest of the screws. **Be careful to include the isolation washers under the tabs and the insulating washers under the screw heads.**

원문: Fluke Calibration 732C / 734C 설명서 · 제조사 원문 자료입니다. 사양은 제조사 사정에 따라 변경될 수 있습니다.

Removing the Power Transformer Assembly

Proceed as follows to remove the power transformer assembly:

1. Do the steps under *Initial Access Procedure*.
2. Remove any cable attached to the rear panel.
3. Disconnect the 3-position cable from the power transformer assembly where it plugs onto the A5 assembly.
4. Remove the three screws that fasten the rear panel and transformer assembly to the chassis (one on each side and one on the bottom).
5. Slide the rear panel and transformer assembly (still fastened together) slightly back and out of the way.
6. Remove the four screws (two on each side) that fasten the rear panel to the power transformer assembly.
7. Remove the power transformer assembly.

Troubleshooting

When a problem occurs with the 732C, first verify that the battery is good and that the line power fuse is intact. Then you need to determine if the problem is in the 10 V reference circuitry or the A5 Battery Charger/Power Supply assembly.

Presented first is a simple performance test for troubleshooting the 10 V reference circuitry. If the 10 V reference circuit is faulty, the complete oven assembly must be replaced as a unit. The reason for this is that repairing the reference circuitry can disrupt the stability of the standard.

Following the 10 V reference performance test is a detailed troubleshooting procedure for the A5 Battery Charger/Power Supply. If you believe that the reference circuitry is faulty, review the A5 troubleshooting information first. Make sure that the problem is not in the A5 assembly before you replace an oven assembly.

10 V Reference Performance Test

To check for a failure in the 1 V reference circuitry, look for any of the following symptoms (assuming that you have allowed a warmup period of at least 24 hours):

1. The 10 V output is further than ±3 mV from 10 V.
2. The 1 V output is further than ±1.5 mV from 10 V. The 0.1 V output is further than ±0.5 mV from 0.1 V.
3. When the 10 V output is shorted, the short circuit current is greater than 50 mA.
4. The 10 V output is excessively noisy with consistent dvm rattle of greater than 5 μV (using a 6-1/2 or 7-1/2 digit dvm with sampling no faster than 1 per second and with filtering on).
5. The 1 V output is excessively noisy with consistent dvm rattle of greater than 2 μV (using a 6-1/2 or 7-1/2 digit dvm with sampling no faster than 1 per second and with filtering on).

원문: Fluke Calibration 732C / 734C 설명서 · 제조사 원문 자료입니다. 사양은 제조사 사정에 따라 변경될 수 있습니다.

Troubleshooting the A5 Battery Charger Assembly

There are six functional circuit groups in the A5 assembly:

1. Transformer/Rectifier/Filter
2. Battery Charger
3. +11.5V Preregulator
4. +11.5V Regulator
5. -6V Supply
6. IN CAL LED Logic

These groups are linked together but are autonomous enough to be checked independently on an input/output basis. The following information describes the circuits where necessary to help with troubleshooting.

Transformer/Rectifier/Filter

The transformer/rectifier/filter functional group is composed of the transformer assembly, the overvoltage detect circuit, the rectifier bridge, and the capacitive filter. The transformer provides a secondary voltage of a nominal 16 V rms, or about 22 V pk.

The best way to troubleshoot this section is to use an oscilloscope at TP501 and at the secondary input connector J501. The ripple voltage at TP501 should be approximately 400 mV p-p.

TP501 should have at least 14 V dc present relative to COM1 at TP509.

If the charger puts out approximately 12 V dc but will not go higher, check to see that the ac line voltage selector is in the proper ac position. These symptoms occur if the selector is in the 220 V ac position and 120 V ac is applied.

+11.5V DC Regulator

The input and output of the +11.5 V dc regulator circuit can be easily checked at TP507 and TP508. The input should be nominally 12.5 V dc. If there is no voltage at the 10 V output binding posts, check F501.

-6V DC Supply

Check the -6V output at U511 pin 5 or at J504 pin 6 to verify the output (voltage at J504 pin 6 will be approximately 0.4V less magnitude due to the drop in R566). If it is bad, first disconnect J504 and recheck the output. If it is now good, this confirms that something downstream from the cable is at fault.

원문: Fluke Calibration 732C / 734C 설명서 · 제조사 원문 자료입니다. 사양은 제조사 사정에 따라 변경될 수 있습니다.

Manual Status Information

The Manual Status Information table that precedes the parts list defines the assembly revision levels that are documented in the manual. Revision levels are printed on the component side of each pca. See Table 11.

Table 11. Manual Status Information

Ref or Option No.	Assembly Name	Fluke Calibration Part No.	Revision Level
A1	Front Panel PCA	4844429	002
A5	Power Supply PCA	4844418	004

Newer Instruments

Changes and improvements made to the instrument are identified by incrementing the revision letter marked on the affected pca. These changes are documented on a manual supplement which, when applicable, is included with the manual.

List of Replaceable Parts

This section contains an illustrated list of replaceable parts for the 734C, and 732C. Parts are listed by assembly; alphabetized by reference designator. Each assembly is accompanied by an illustration showing the location of each part and its reference designator. The parts lists give the following information:

- Reference designator
- An indication if the part is subject to damage by static discharge
- Description
- Fluke stock number
- Total quantity
- Any special notes (for example, factory-selected part)

⚠ Caution

A * symbol indicates a device that may be damaged by static discharge.

원문: Fluke Calibration 732C / 734C 설명서 · 제조사 원문 자료입니다. 사양은 제조사 사정에 따라 변경될 수 있습니다.

Parts

Note Ni-Cd

This instrument contains a sealed lead battery. Do not mix with the solid waste stream. Spent batteries should be disposed of by a qualified recycler or hazardous materials handler. Contact your authorized Fluke Calibration service center for recycling information.

Table 12. 734C DC Reference Standard

Reference Designator	Description	Part Number	Qty.
A732C	732C DC Standard	4862747	4
H500-513	Screw, 6-32, .250, Pan, Phillips, Steel, Zinc-Clear, Lock	152140	14
H515-536	Screw, 6-32 X 0.25, Flat Hd Undercut, Phillips, Heat Treated, Magnetic SS, Nylon Patch	320093	22
H540-559	Screw, 8-32, .375, Lo Cap, Sckt, Stainless Steel, Blk Oxide, Lock	295105	20
H565-568	Screw, Screw, Knurl, Sl, Capt, SS,10-32, 1.750	912436	4
H570-581	Rivet, Rivet, Button, Nyl, .125, .330	927533	12
MP509-512	734A-8032, Barrel Nut	868984	4
MP513	734A-2065, Inst Top Cover	661006	1
MP514	734A-2066, Inst Bottom Cover	661014	1
MP515	734A-2058, Rear Panel	868989	1
MP516-519	734A-8031, Guide Pin	869029	4
MP520-523	5700A-2043-01, Bottom Foot, Molded, Gray #7	868786	4
MP524-527	5700A-2053-01, Handle, Instrument, Gray #7	886333	4
MP528-529	734A-2501, Side Trim Insert	878934	2
MP530	734A-2701, Chassis Assembly	878939	1
MP531-532	734A-8025, Sidetrim	869052	2
MP533	734x-80xx, Decal, Front Panel	4961534	1
MP534	734A-8150, Bezel Bottom,Painted	921908	1
MP535-538	734A-8152, Pawl,Painted	921903	4
MP539	734A-8163, Bezel Top,Painted	921911	1
MP540-543	Spring, Spring, Coil, Ext, Loop End, SS, .500, .125	912423	4
MP544-547	Spring, Spring, Coil, Comp, SS, 1.00, .240	912428	4
W503	734A-4401, Receptacle Cable	921890	1
W504	Line Cord,N America,10A,125V,Nema5-15 To C13, 3x18 awg, Svt,1.8m,Black	284174	1

원문: Fluke Calibration 732C / 734C 설명서 · 제조사 원문 자료입니다. 사양은 제조사 사정에 따라 변경될 수 있습니다.

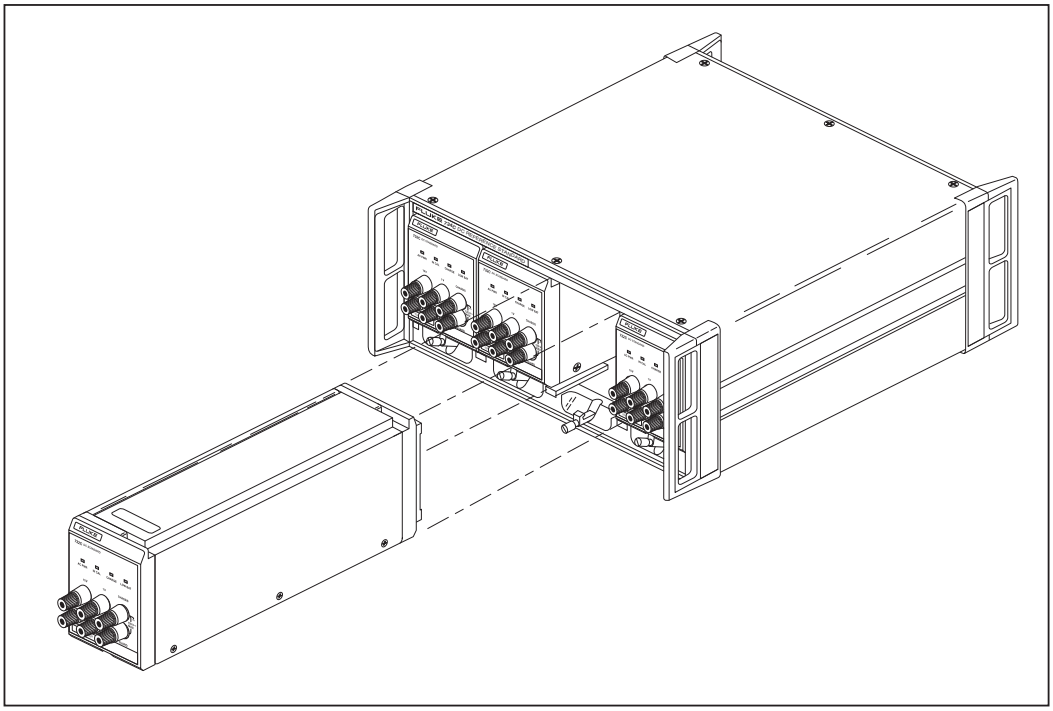

les023.eps

Figure 19. 734C DC Reference Standard

원문: Fluke Calibration 732C / 734C 설명서 · 제조사 원문 자료입니다. 사양은 제조사 사정에 따라 변경될 수 있습니다.

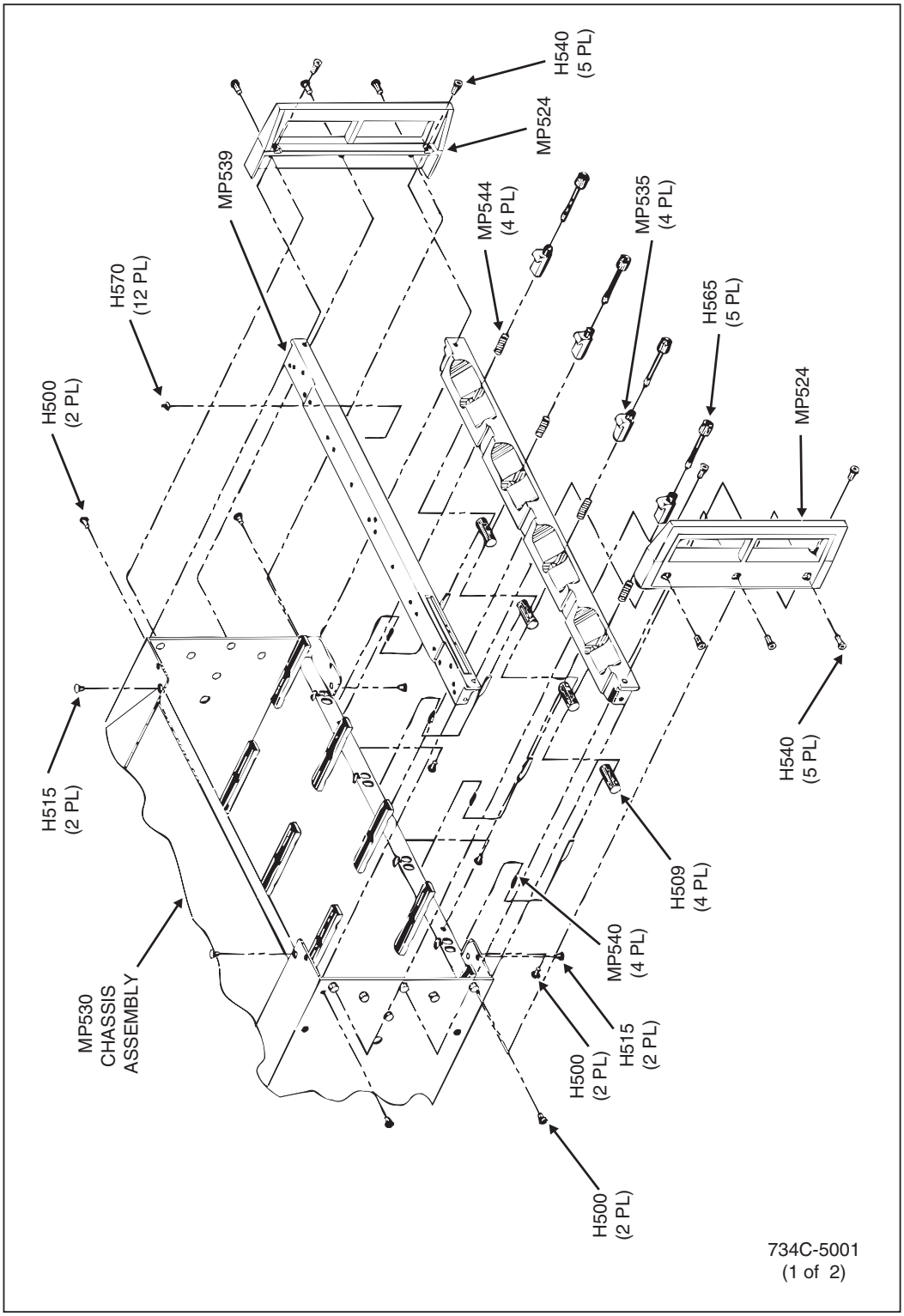

les024.eps

Figure 19. 734C DC Reference Standard (cont)

원문: Fluke Calibration 732C / 734C 설명서 · 제조사 원문 자료입니다. 사양은 제조사 사정에 따라 변경될 수 있습니다.

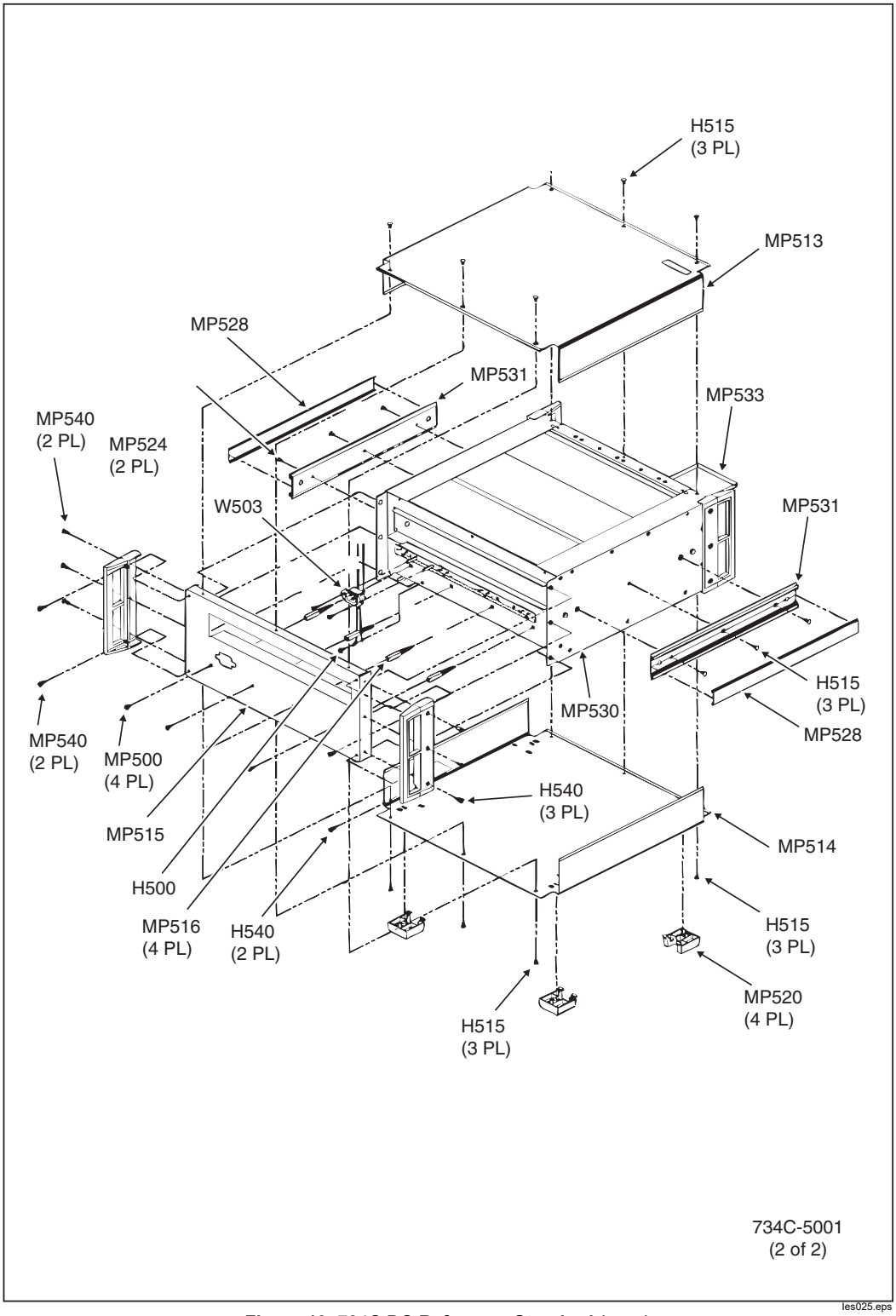

les025.eps

Figure 19. 734C DC Reference Standard (cont)

원문: Fluke Calibration 732C / 734C 설명서 · 제조사 원문 자료입니다. 사양은 제조사 사정에 따라 변경될 수 있습니다.

Table 13. 732C DC Standard

Reference Designator	Description	Part Number	Qty
A1	Front Panel Pca	4844429	1
A5	Power Supply Pca	4844418	1
BT401	Battery, Lead-Acid,12V,7ah	887042	1
E001	Terminal, Term, Ring, #6, 26-22awg, Crimp, Gold	832667	1
⚠ F1	Fuse,.25X1.25,0.175A,250V,SLOW	5019683	1
H112	Washer, Lock, Intrnl, Stl, .512id	641381	1
H146	Washer, Flat, Brass, #8, 0.032 Thk	631606	5
H174	Screw, 6-32 X 0.25, Flat Hd Undercut, Phillips, Heat Treated, Magnetic Ss, Nylon Patch	320093	16
H185	Screw, 6-32, .250, Pan, Phillips, Steel, Zinc-Clear, Lock	152140	14
H225	Screw, Screw, Fh,P,Lock,Stl,4-40,.250	114884	1
H226	Screw, 4-40, .250, Pan, Phillips, Steel, Zinc-Clear, Lock	129890	2
H303	Screw,6-32,.312, Pan, Phillips, Steel, Zinc-Clear, Lock	152157	4
H504	Screw, 8-32, .375, Lo Cap, Sckt, Stainless Steel, Blk Oxide, Lock	295105	2
H618	Screw, Screw, Fhu, P, SS, 6-32, .312	867234	6
H625	Washer,Washer,Shldr,Nyl,.115,.200,.030	436386	2
MP100	Oven Module, Tested	4862764	1
MP103	Guard Top	878918	1
MP104	Guard Bottom	878921	1
MP106	Bezel	871819	2
MP107	Front Panel Decal	4862773	1
MP108	Front Panel	871876	1
MP111	Ground Adapter, Binding Post	882998	1
MP113	Insulator, Binding Post, Front, Black	860411	6
MP119	Insulator, Rear, Binding Post, Black	860361	5
MP125	Binding Post-Red	860452	3
MP127	Binding Post, Black	860457	1
MP129	Binding Post, Green	871616	1
MP130	Binding Post, Blue	871637	1
MP143	Ground Strip, Becu, Spring Finger	370619	1.5

원문: Fluke Calibration 732C / 734C 설명서 · 제조사 원문 자료입니다. 사양은 제조사 사정에 따라 변경될 수 있습니다.

Table 14. 732C DC Standard (cont.)

Reference Designator	Description	Part Number	Qty
MP144	Cable accessory, clamp, adhesive, nylon	838300	2
MP150	Cable access, tie, 4.00l, .10w, .75 dia	172080	1
MP151	Cable tie mount ,cable tie, mount, adhesive, 0.19 width	565036	1
MP155	Washer, low thermal #8	859939	9
MP164	Nut, low thermal, 8-32	850334	12
MP196	Core, core, bead, ferrite, .562 x .25 x .53	876979	4
MP228	O-ring, nitrile, shore a 70, .208 id ,.070 w	910815	2
MP307	Rear panel	5005861	1
MP310	Label ,label, battery switch alert,732b	921978	1
MP314	Decal, front nameplate	4863481	1
MP315	Label, label, vinyl, 1.500, .312	844712	1
MP401	Terminal mtg assy	878947	1
MP402	Battery bracket	878897	1
MP405	Chassis assembly	878942	1
MP501	Switch accessory ,switch acc, cap ,blk	876891	1
MP502	Handle arm/rear foot, spacer	871868	2
MP506	Top cover, painted	871962	1
MP508	Handle, painted	871959	1
MP602	Insul pt, diode, polyimide, .130, .375	887307	2
MP636	Foot, rubber, black, .50 sq, .23 thk, adhesive	887047	4
MP703	Oven foam	3805434	1
MP704	Foam, plug inner	3805429	1
MP705	Foam, plug outer	3805441	1
MP706	Oven top cover	869110	1
MP707	Terminal extension	869102	4
T633	Transformer assembly	4970458	1
W001	Wire, wire, tef, ul1180, 26awg, strn, wht	166991	1
W230	Cord, line, 5-15/iec,3-18awg,svt	284174	1
W640	Cable, battery	869198	1
-	CE mark label sil , label, CE mark, silver	600715	1

원문: Fluke Calibration 732C / 734C 설명서 · 제조사 원문 자료입니다. 사양은 제조사 사정에 따라 변경될 수 있습니다.

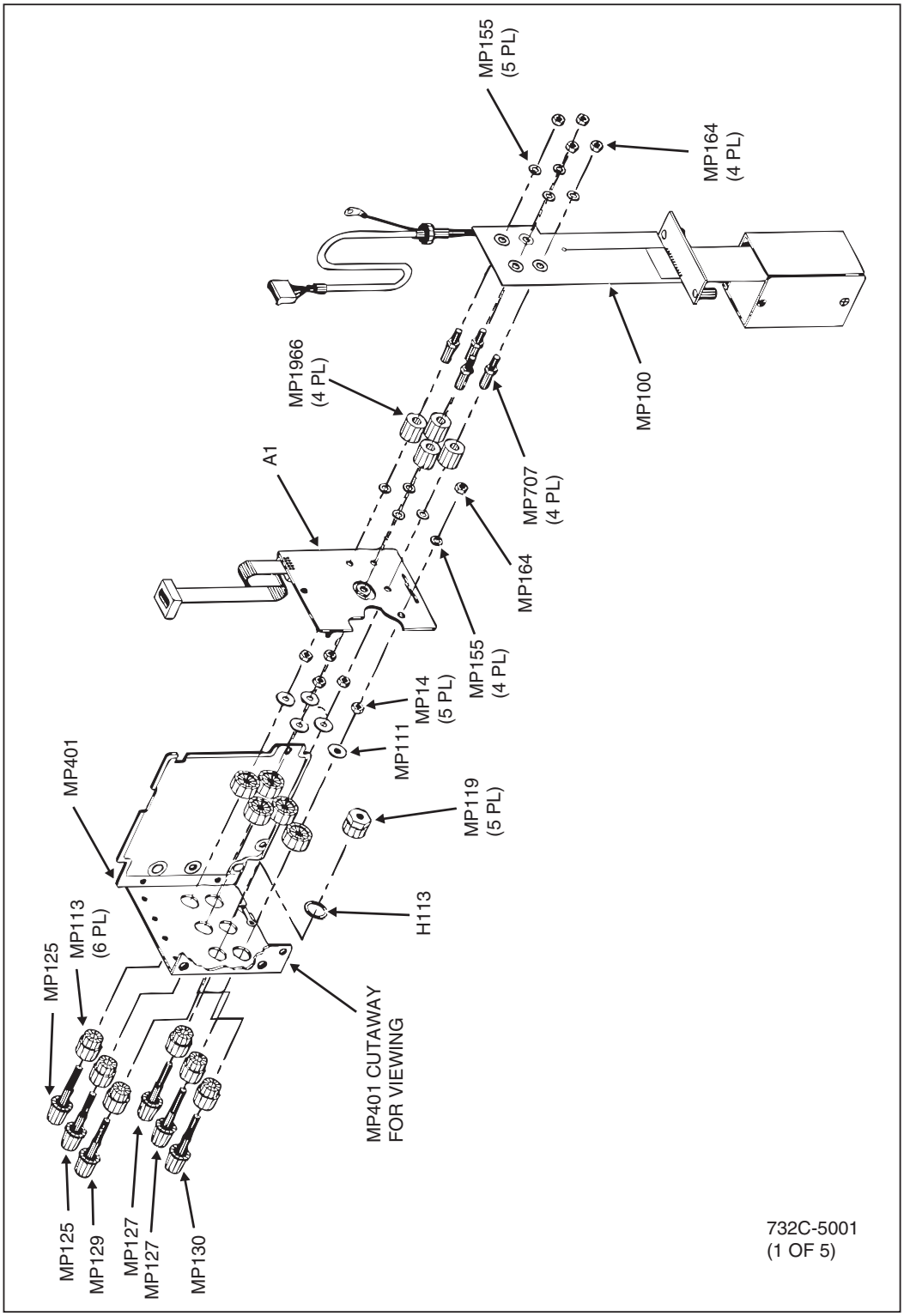

ies26.eps

Figure 20. 732C DC Standard

원문: Fluke Calibration 732C / 734C 설명서 · 제조사 원문 자료입니다. 사양은 제조사 사정에 따라 변경될 수 있습니다.

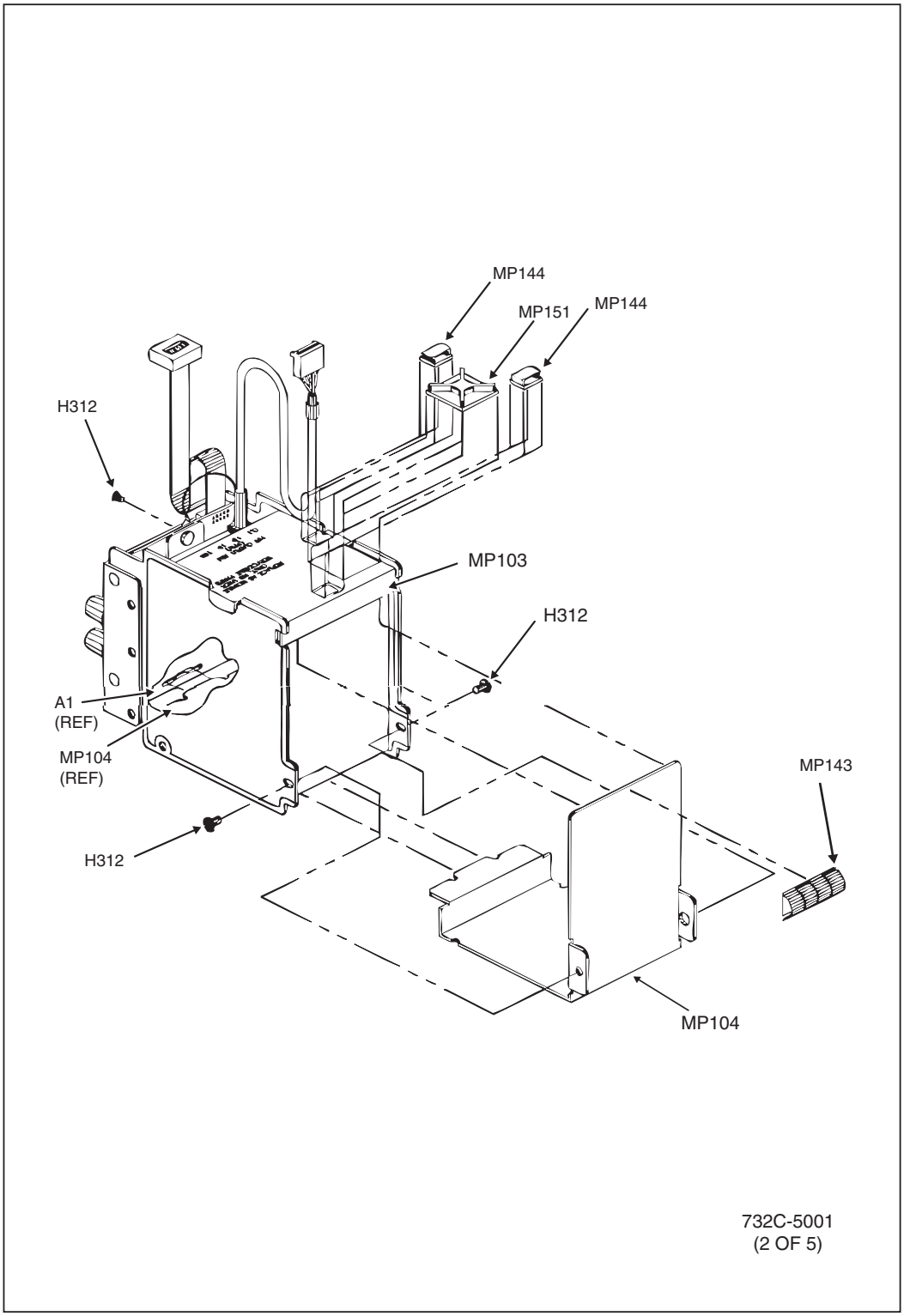

les027.eps

Figure 20. 732C DC Standard (cont)

원문: Fluke Calibration 732C / 734C 설명서 · 제조사 원문 자료입니다. 사양은 제조사 사정에 따라 변경될 수 있습니다.

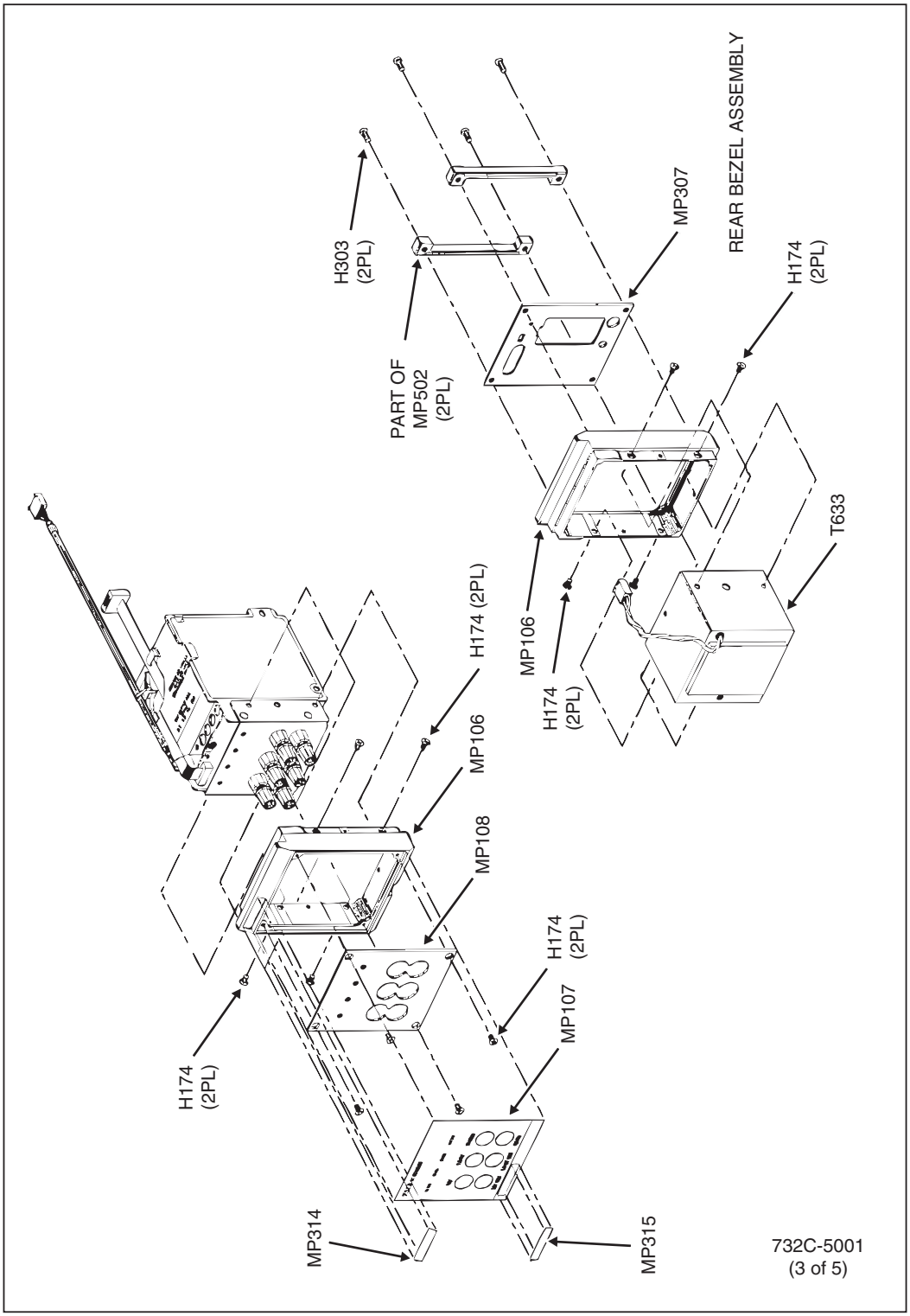

les028.eps

Figure 20. 732C DC Standard (cont)

원문: Fluke Calibration 732C / 734C 설명서 · 제조사 원문 자료입니다. 사양은 제조사 사정에 따라 변경될 수 있습니다.

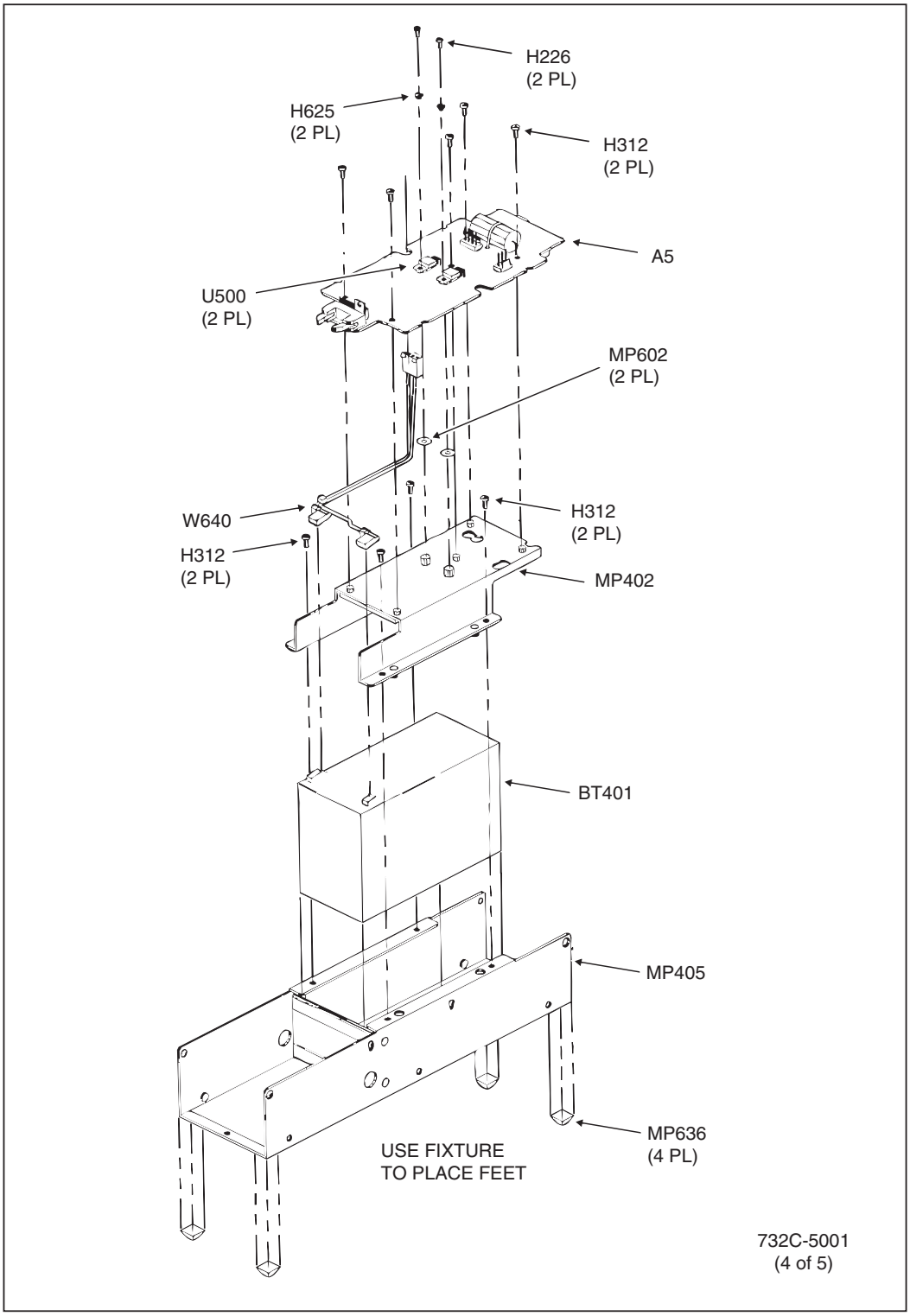

les029.eps

Figure 20. 732C DC Standard (cont)

원문: Fluke Calibration 732C / 734C 설명서 · 제조사 원문 자료입니다. 사양은 제조사 사정에 따라 변경될 수 있습니다.

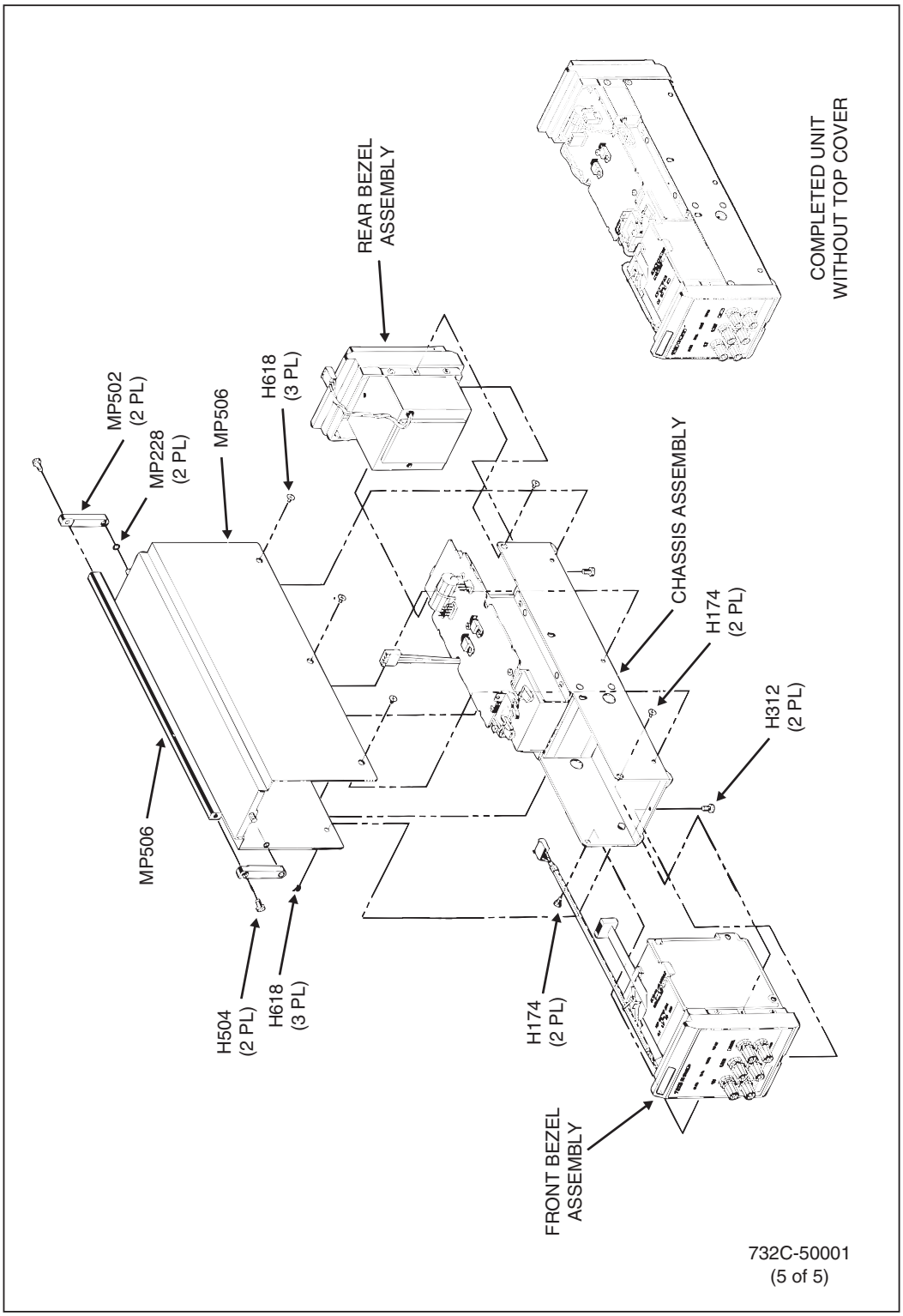

ies30.eps

Figure 20. 732C DC Standard (cont.)

원문: Fluke Calibration 732C / 734C 설명서 · 제조사 원문 자료입니다. 사양은 제조사 사정에 따라 변경될 수 있습니다.

원문: Fluke Calibration 732C / 734C 설명서 · 제조사 원문 자료입니다. 사양은 제조사 사정에 따라 변경될 수 있습니다.