8270A/8370A

High-Pressure Modular Controller

Operators Manual

July 2018

© 2018 Fluke Corporation. All rights reserved. Specifications are subject to change without notice.
All product names are trademarks of their respective companies.

원문: Fluke Calibration 8270A,8370A 메뉴얼(영문) · 제조사 원문 자료입니다. 사양은 제조사 사정에 따라 변경될 수 있습니다.

LIMITED WARRANTY AND LIMITATION OF LIABILITY

Each Fluke product is warranted to be free from defects in material and workmanship under normal use and service. The warranty period is one year and begins on the date of shipment. Parts, product repairs, and services are warranted for 90 days. This warranty extends only to the original buyer or end-user customer of a Fluke authorized reseller, and does not apply to fuses, disposable batteries, or to any product which, in Fluke's opinion, has been misused, altered, neglected, contaminated, or damaged by accident or abnormal conditions of operation or handling. Fluke warrants that software will operate substantially in accordance with its functional specifications for 90 days and that it has been properly recorded on non-defective media. Fluke does not warrant that software will be error free or operate without interruption.

Fluke authorized resellers shall extend this warranty on new and unused products to end-user customers only but have no authority to extend a greater or different warranty on behalf of Fluke. Warranty support is available only if product is purchased through a Fluke authorized sales outlet or Buyer has paid the applicable international price. Fluke reserves the right to invoice Buyer for importation costs of repair/replacement parts when product purchased in one country is submitted for repair in another country.

Fluke's warranty obligation is limited, at Fluke's option, to refund of the purchase price, free of charge repair, or replacement of a defective product which is returned to a Fluke authorized service center within the warranty period.

To obtain warranty service, contact your nearest Fluke authorized service center to obtain return authorization information, then send the product to that service center, with a description of the difficulty, postage and insurance prepaid (FOB Destination). Fluke assumes no risk for damage in transit. Following warranty repair, the product will be returned to Buyer, transportation prepaid (FOB Destination). If Fluke determines that failure was caused by neglect, misuse, contamination, alteration, accident, or abnormal condition of operation or handling, including overvoltage failures caused by use outside the product's specified rating, or normal wear and tear of mechanical components, Fluke will provide an estimate of repair costs and obtain authorization before commencing the work. Following repair, the product will be returned to the Buyer transportation prepaid and the Buyer will be billed for the repair and return transportation charges (FOB Shipping Point).

THIS WARRANTY IS BUYER'S SOLE AND EXCLUSIVE REMEDY AND IS IN LIEU OF ALL OTHER WARRANTIES, EXPRESS OR IMPLIED, INCLUDING BUT NOT LIMITED TO ANY IMPLIED WARRANTY OF MERCHANTABILITY OR FITNESS FOR A PARTICULAR PURPOSE. FLUKE SHALL NOT BE LIABLE FOR ANY SPECIAL, INDIRECT, INCIDENTAL, OR CONSEQUENTIAL DAMAGES OR LOSSES, INCLUDING LOSS OF DATA, ARISING FROM ANY CAUSE OR THEORY.

Since some countries or states do not allow limitation of the term of an implied warranty, or exclusion or limitation of incidental or consequential damages, the limitations and exclusions of this warranty may not apply to every buyer. If any provision of this Warranty is held invalid or unenforceable by a court or other decision-maker of competent jurisdiction, such holding will not affect the validity or enforceability of any other provision.

Fluke Corporation
P.O. Box 9090
Everett, WA 98206-9090
U.S.A.

Fluke Europe B.V.
P.O. Box 1186
5602 BD Eindhoven
The Netherlands

11/99

Table of Contents

Title	Page
Introduction	1
Contact Fluke Calibration	1
Safety Information	2
Symbols	3
The Product Manual Set	3
Specifications	4
Unpack the Product	4
Product Placement	5
Connect to Mains Power	6
Mains Voltage	6
Access the Module Bay	7
PMM Installation	8
PCM Installation	11
Barometer Module	11
Rear-Panel Manifold Pressure Connections	12
SUPPLY Port	15
EXHAUST Port (Vacuum Pump if Required)	15
TEST Port	16
REF Port	16
VENT Port	17
Controller Settings (Setup Menu)	17
Setup Menu	17
Instrument Setup Menu	18
Instrument Settings Menu	18
Remote Port Menu	21
Front-Panel Features	22
Rear-Panel Features	24
Turn on the Product	26
Main Menu	26
Operation	32
Operating Modes	32
Set Target Pressure (Setpoint)	32
Step Pressure Up or Down	32
Jog Pressure	33
Vent and Abort	33
Pressure Measurement	34

원문: Fluke Calibration 8270A,8370A 메뉴얼(영문) · 제조사 원문 자료입니다. 사양은 제조사 사정에 따라 변경될 수 있습니다.

Pressure Control Settings 34
Control Modes 34
Dynamic Control Modes 35
Static Control Mode 36
Slew Rate (Rate of Pressure Change) 36
Safety Limits 37
Upper Limit 37
Lower Limit 37
Auto Vent 37
Pressure Measurement Settings 37
Unit and Custom Units 37
Measurement Modes 39
Measurement Resolution 39
Module Selection 40
Pressure Filter 40
AutoZero 40
Gauge Mode 40
Absolute Mode 40
Atmosphere 41
Head Height 42
PM500 Absolute Zeroing 43
Required Equipment 43
PM500 Full Scale ≤700 kPa Absolute Zeroing 44
PM500 Full Scale >700 kPa Absolute Zeroing 46
Tasks 46
Leak Test 46
Switch Test 47
Exercise 48
Program 48
External Driver Communication 50
Configure the Driver 51
Driver Electrical Connections 53
External Abort and Isolation Valves 54
System Mode 54
Maintenance 54
Fuse Replacement 54
Clean the Exterior 55
Reset Controller Settings 56
Diagnostics 56
System 56
Measure 57
Control 57
Remote Interface 58
Troubleshooting 58
Error Codes 61
User-Replaceable Parts and Accessories 63

원문: Fluke Calibration 8270A,8370A 메뉴얼(영문) · 제조사 원문 자료입니다. 사양은 제조사 사정에 따라 변경될 수 있습니다.

Introduction

The Fluke Calibration 8270A/8370A High-Pressure Modular Controller (the Product) precisely measure and control pneumatic pressures up to 44 MPa (6300 psi) and 107 MPa (15 500 psi), respectively. Use the Product to calibrate, characterize, or test a wide variety of pressure measurement devices that include transmitters, gauges, and switches.

The Product uses interchangeable Pressure Measurement Modules (PMMs) and a Pressure Control Module (PCM) to regulate pressure output. The touchscreen display features a multi-language user interface (UI). See *Instrument Setup Menu* for more information.

Contact Fluke Calibration

To contact Fluke Calibration, call one of the following telephone numbers:

- Technical Support USA: 1-877-355-3225
- Calibration/Repair USA: 1-877-355-3225
- Canada: 1-800-36-FLUKE (1-800-363-5853)
- Europe: +31-40-2675-200
- Japan: +81-3-6714-3114
- Singapore: +65-6799-5566
- China: +86-400-810-3435
- Brazil: +55-11-3759-7600
- Anywhere in the world: +1-425-446-6110

To see product information or download manuals and the latest manual supplements, visit Fluke Calibration's website at www.flukecal.com.

To register your product, visit http://flukecal.com/register-product.

원문: Fluke Calibration 8270A,8370A 메뉴얼(영문) · 제조사 원문 자료입니다. 사양은 제조사 사정에 따라 변경될 수 있습니다.

Safety Information

A **Warning** identifies conditions and procedures that are dangerous to the user. A **Caution** identifies conditions and procedures that can cause damage to the Product or the equipment under test.

⚠⚠Warnings

To prevent possible electrical shock, fire, or personal injury:

- **Only assemble and operate high-pressure systems if you know the correct safety procedures. High-pressure liquids and gases are hazardous and the energy from them can be released without warning.**
- **Read all safety information before you use the Product.**
- **Carefully read all instructions.**
- **Do not use the Product around explosive gas, vapor, or in damp or wet environments.**
- **Do not operate the Product with covers removed or the case open. Hazardous voltage exposure is possible. Pressure modules may be exchanged through the front panel while the Product is turned on.**
- **Use this Product indoors only.**
- **Do not put the Product where access to the mains power cord is blocked.**
- **Use only the mains power cord and connector approved for the voltage and plug configuration in your country and rated for the Product.**
- **Make sure the ground conductor in the mains power cord is connected to a protective earth ground. Disruption of the protective earth could put voltage on the chassis that could cause death.**
- **Replace the mains power cord if the insulation is damaged or if the insulation shows signs of wear.**
- **Use the Product only as specified, or the protection supplied by the Product can be compromised.**
- **Before the Product is used to apply pressure, ensure the integrity of all components to be pressurized and make sure they are rated to adequate working pressure.**
- **Do not apply more than the rated voltage, between the terminals or between each terminal and earth ground.**
- **Do not touch voltages >30 V ac rms, 42 V ac peak, or 60 V dc.**

원문: Fluke Calibration 8270A,8370A 메뉴얼(영문) · 제조사 원문 자료입니다. 사양은 제조사 사정에 따라 변경될 수 있습니다.

- **Do not use the Product if it operates incorrectly.**
- **Disable the Product if it is damaged.**
- **Use only specified replacement parts.**
- **Have an approved technician repair the Product.**
- **Do not disable safety interlocks or pressure-relief devices.**
- **Use two handles to lift and carry the Product.**

Symbols

The symbols shown in Table 1 can be found in this manual or on the Product.

Table 1. Symbols

Symbol	Description	Symbol	Description
⚠	Hazardous voltage. Risk of electric shock.		Certified by CSA Group to North American safety standards.
⚠	Risk of Danger. Important information. See Manual.	CE	Conforms to European Union directives.
	Consult user documentation.		Conforms to relevant Australian EMC standards.
	Fuse		Conforms to relevant South Korean EMC Standards.
⏚	Earth Terminal		This product complies with the WEEE Directive marking requirements. The affixed label indicates that you must not discard this electrical/electronic product in domestic household waste. Product Category: With reference to the equipment types in the WEEE Directive Annex I, this product is classed as category 9 "Monitoring and Control Instrumentation" product. Do not dispose of this product as unsorted municipal waste.

The Product Manual Set

The Product manuals are:

- *8270A/8370A Safety Information*
- *8270A/8370A Operators Manual* (provided at www.Flukecal.com.)
- *6270A, 8270A, 8370A Remote Programmers Guide* (provided at www.Flukecal.com)

To order, refer to the Fluke Calibration Catalog or contact a Fluke Calibration sales representative. See *Contact Fluke Calibration*.

This manual provides complete information to install and operate the Product from the front panel.

원문: Fluke Calibration 8270A,8370A 메뉴얼(영문) · 제조사 원문 자료입니다. 사양은 제조사 사정에 따라 변경될 수 있습니다.

Calibration and Repair Information

If calibration or repair is needed during the warranty period, contact an authorized Fluke Calibration Service Center to arrange for repair (see *Contact Fluke Calibration*). Please have the Product information ready such as the purchase date and serial number to schedule the repair.

Specifications

Safety specifications are located in the printed *8270A/8370A Safety Information*. Full specifications are located online in the *8270A/8370A Specifications*.

Unpack the Product

The Product is delivered in a corrugated container with foam inserts. An optional molded shipping case with custom foam inserts is also available, see *User-Replaceable Parts and Accessories*.

Remove the Product and its accessories from the shipping container and remove each element from its protective plastic bag. Check that all items listed in Table 2 are present and have no visible damage.

If it is necessary to reship the Product, use the original container. To order a new container, see *Contact Fluke Calibration*.

Table 2. Standard Equipment

Item	Model or Part Number
The Product	8270A/8370A
Mains Power Cord	See Table 3.
PMM (Pressure Measurement Module, ordered separately)	Assorted ranges and Barometer modules are also available. See Flukecal.com.
PCM (Pressure Control Module, ordered separately)	PCM-STD-40M/PCM-STD-100M
8270A/8370A Safety Information	4938183
Module Installation Tool	5010562 (6 mm hex bit), 5013218 (handle)
8270A Seals Kit	SK-8270-SERVICE [1]
8370A Seals Kit	SK-8370-SERVICE [1]
1. For detailed information on installation of replacement seals, consult the *8270A/8370A Service Manual.*	

원문: Fluke Calibration 8270A,8370A 메뉴얼(영문) · 제조사 원문 자료입니다. 사양은 제조사 사정에 따라 변경될 수 있습니다.

Product Placement

⚠⚠Warnings

To prevent possible electrical shock, fire, or personal injury, do not restrict access to the Product mains power cord. The mains power cord is the mains disconnecting device. If access to the power cord is inhibited by rack mounting, a properly-rated accessible mains disconnecting switch must be provided within reach as part of the installation.

To prevent possible personal injury:

- **Use good lifting practices when lifting or moving the Product. The Product is an unbalanced load and can weigh as much as 20 kg (44 lb).**
- **Use two handles to lift and carry the Product.**

Use the Product on a bench or in a standard 19 inch equipment rack. Purchase a rack mount kit to install the Product into an equipment rack. For bench-top use, install the Product on a flat, stable surface at a convenient height. The front feet can be extended to incline the Product for easier viewing.

Minimize the distance between the Product and the device or system under test to enhance control performance and reduce pressure settling times.

For installation, the Product requires:

- An electrical power source of 100 V ac to 240 V ac, 47 Hz to 63 Hz.
- A continuous, regulated pressure supply of clean, dry, non-corrosive gas at 10 % greater than the highest pressure range should be connected to the Product SUPPLY port. For optimal control performance, the supply pressure should be no greater than 100 times the full scale of the active measurement range. Never exceed the maximum pressure of the Product chassis.
- A vacuum source of 7 kPa (1 psi) absolute and with a displacement of at least 90 L/min (3 cfm) if controlling pressures <7 kPa (1 psi) gauge (8270A only).

원문: Fluke Calibration 8270A,8370A 메뉴얼(영문) · 제조사 원문 자료입니다. 사양은 제조사 사정에 따라 변경될 수 있습니다.

Connect to Mains Power

⚠⚠Warning

To prevent shock hazard, connect the factory-supplied three-conductor mains power cord to a properly-grounded power outlet. Do not use a two-conductor adapter or extension cord, as it will break the protective ground connection.

Mains Voltage

To power the Product, mains voltage ranging from 100 V ac to 240 V ac with frequencies from 47 Hz to 63 Hz is required.

The Product comes with the appropriate line power plug for the country of purchase. If a different type is necessary, refer to Table 3 for a list that shows the mains line power plug types available from Fluke Calibration.

Table 3. Line Power Cord Types Available from Fluke Calibration

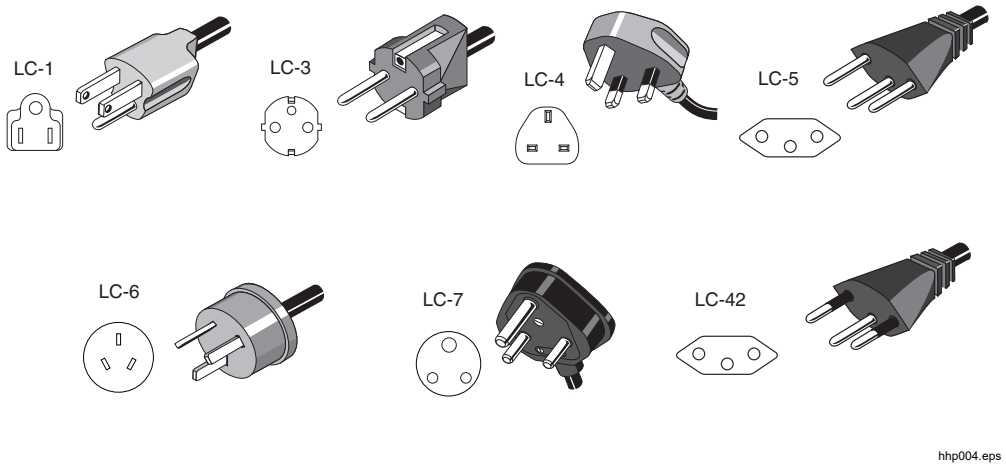

Type	Fluke Calibration Option Number
North America	LC-1
Universal Euro	LC-3
United Kingdom	LC-4
Switzerland	LC-5
Australia	LC-6
South Africa	LC-7
Brazil	LC-42

원문: Fluke Calibration 8270A,8370A 메뉴얼(영문) · 제조사 원문 자료입니다. 사양은 제조사 사정에 따라 변경될 수 있습니다.

Access the Module Bay

After the Product is properly placed (in a standard 19 inch rack or on a bench top) install the modules in the Module Bay. Before use, install the Pressure Control Module (PCM) and Pressure Measurement Module(s) (PMM). See *PCM Installation* for PCM bolt torque values.

Note

The Product rear-panel power switch can be on or off during PMM exchange or installation.

⚠ Warning

To prevent personal injury, vent the supply pressure before you remove the PCM.

To access the Module Bay, see Figure 1:

1. Pull out the handle (①) located directly below the numeric keypad. This unlocks the front panel.
2. Pull the handle to slide out front panel and access the Module Bay (②).

Note

For safety, the Product automatically vents to atmosphere when the front panel is unlatched and opened. When the front panel is open, the system stays in the Vent mode until closed.

For service activity, see the Service Manual for detailed service processes.

For standard operations, the system pneumatic valves are a normally closed type. Depending on the chassis power/pressure down process, differing levels of trapped pressure are possible.

If power is lost to the product, while at high pressure, remove pressure supply to allow system to mostly depressurize. If possible, power on system to perform a vent.

Before you open the front panel, remove sensitive, low pressure devices from the test port. Use the optional Isolation Valve to improve protection for sensitive pressure devices.

원문: Fluke Calibration 8270A,8370A 메뉴얼(영문) · 제조사 원문 자료입니다. 사양은 제조사 사정에 따라 변경될 수 있습니다.

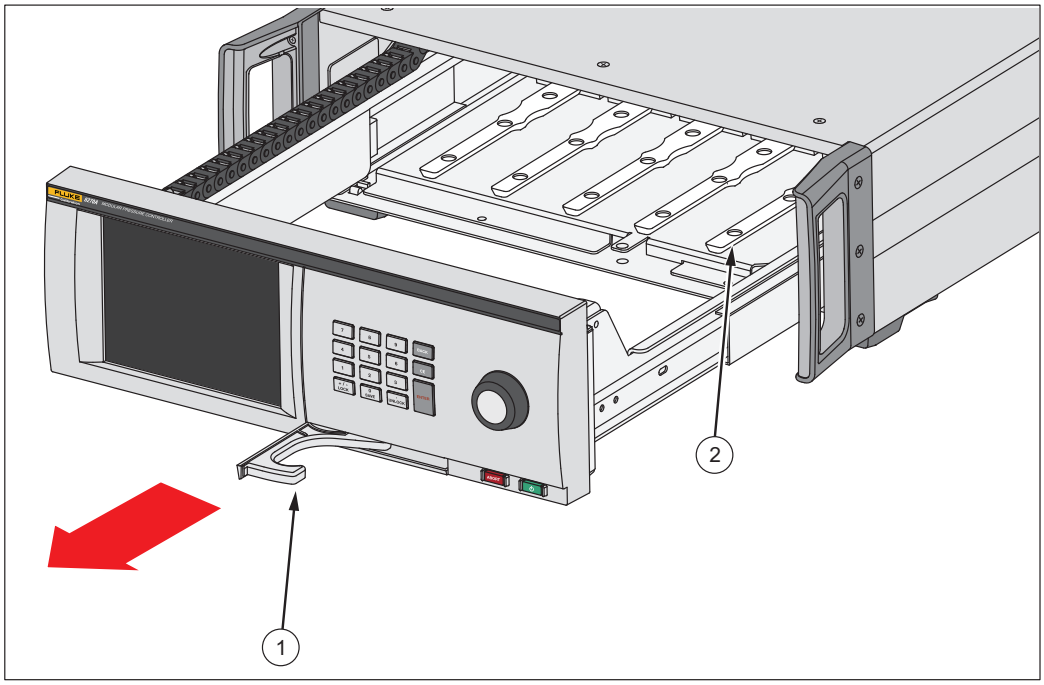

ifb001.eps

Figure 1. Module Bay

PMM Installation

The PMMs are delivered in a separate box. Install the PMMs with the Product turned on or off. For the 8270A, the PMMs can be installed in any order without the need to plug any of the unused slots. For the 8370A, the measure module to the far right (closest to the control module) must have a full scale of 70 MPa (10 000 psi) or greater. A module must be installed in this slot for the system to properly operate. When the front panel is opened, information such as the pressure range of each module is shown after it is connected. The Product detects the PMM information when installed and shows the information in the Modules menu (see *Modules*).

원문: Fluke Calibration 8270A,8370A 메뉴얼(영문) · 제조사 원문 자료입니다. 사양은 제조사 사정에 따라 변경될 수 있습니다.

To install the PMMs:

⚠Caution

To prevent damage to the sensors inside the modules, do not drop the modules.

1. Remove the PMM from its shipping box.
2. Remove the protective plastic cover from the PMM test and reference port.
3. Confirm that the test port and reference port O-rings are properly installed on the module and are not torn or damaged. Additional O-rings are available in case they become lost or damaged.
4. Open the front panel to access the Module Bay as described in the *Access the Module Bay* section.
5. The PMM has a slot on the bottom of it that fits into the track that lies on the bottom of the inner Product case, see Figure 1 (②). Line the track up with the slot and slide the PMM into the bottom case until it stops. See Figure 2.
6. Turn the knob on the PMM clockwise until it clicks one time to tighten it, modules less than or equal to 44 MPa (6300 psi). High-pressure modules, with full scales greater than 44 MPa (6300 psi), use a standard hex bolt for tightening the pressure connection. A 6 mm hex head wrench is required to connect the module (provided with the chassis). There is no torque limiting feature on these high pressure modules. The recommended torque is 10-14 N · m (7 - 10 lbf · ft).

Note

The PMM knob is a torque-limiting knob that slips once the proper amount of torque is applied. This prevents accidental over-tightening that can damage the manifold.

7. After tightening the PMM to the manifold, the module should automatically appear on the display. Check the main display to see if the PMM is properly installed.

Note

When the Module Bay is opened, the front-panel display shows the slots and visually displays the PMMs installed. This provides a method to quickly ensure the newly installed PMM is connected and communicating.

8. Repeat this procedure for any other PMMs.
9. Close and latch the front panel.

원문: Fluke Calibration 8270A,8370A 메뉴얼(영문) · 제조사 원문 자료입니다. 사양은 제조사 사정에 따라 변경될 수 있습니다.

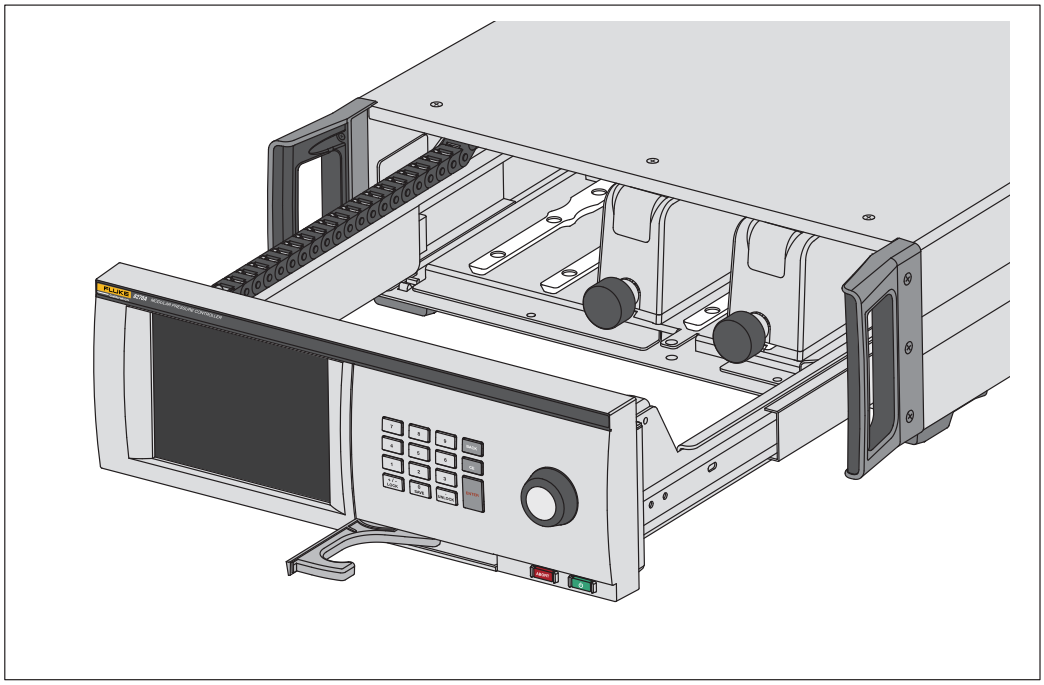

ifb011.eps

Figure 2. PMM Installation

원문: Fluke Calibration 8270A,8370A 메뉴얼(영문) · 제조사 원문 자료입니다. 사양은 제조사 사정에 따라 변경될 수 있습니다.

PCM Installation

Depending upon how the Product is ordered, the PCM may come installed in the unit or be delivered in a separate box.

To install the PCM:

⚠Caution

To prevent damage to the sensors inside the modules, do not drop the modules.

1. Remove the PCM from its shipping box.
2. Remove any protective plastic covers from the PCM pressure ports.
3. Open the Module Bay as described in the *Access the Module Bay* section.
4. The PCM location in the Module Bay is on the far right. Align the track on the bottom of the PCM with the PCM slot inside the Module Bay. See Figure 3.
5. Slide the PCM into place.
6. Tighten the two bolts on the front of the PCM using a 6 mm hex head wrench. The recommended torque is 10-14 N · m (7 - 10 lbf · ft).

⚠Caution

To prevent damage to the internal manifold, do not over torque.

7. Close and latch the front panel.

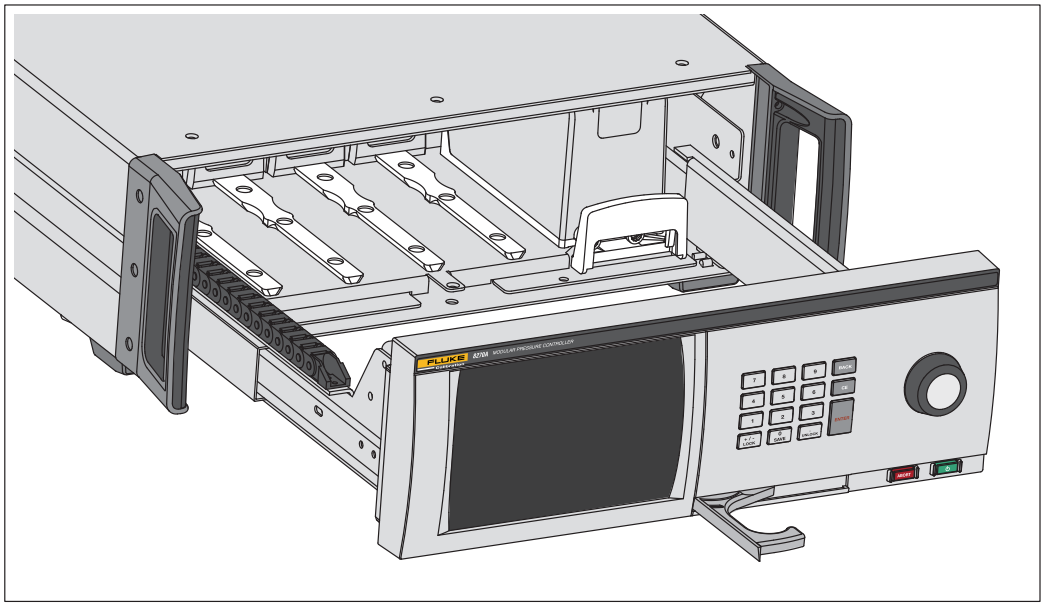

ifb021.eps

Figure 3. PCM Installation

Barometer Module

For absolute measurements with gauge mode modules, a barometer module (PM200-A100K, PM500-A120K, PM500-BA120K, PM500-A200K, or BRM600-BA100K) must be installed, see *Atmosphere*. The module can also be selected as an Autozero reference, see *Autozero - Absolute Mode*.

원문: Fluke Calibration 8270A,8370A 메뉴얼(영문) · 제조사 원문 자료입니다. 사양은 제조사 사정에 따라 변경될 수 있습니다.

Rear-Panel Manifold Pressure Connections

The 8270A comes with one of three types of manifolds installed:

- NPT
- BSP
- SAE

The type of manifold is marked on its lower right corner. Table 4 lists the different manifolds and port sizes. Manifold installation is explained in the *Maintenance* section.

Table 4. 8270A Rear-Panel Manifolds

Manifold	SUPPLY	EXHAUST	TEST	Reference (REF)	VENT
NPT [1]	1/4 inch NPT	1/4 inch NPT	1/4 inch NPT	1/4 inch NPT	1/8 inch NPT
BSP [2]	1/4 inch BSP	1/4 inch BSP	1/4 inch BSP	1/4 inch BSP	1/8 inch BSP
SAE [3]	7/16-20 SAE	7/16-20 SAE	7/16-20 SAE	7/16-20 SAE	7/16-20 SAE

[1] Requires the use of PTFE tape on the male adapter to ensure a good seal.
[2] Bonded seal is required to ensure a good seal.
[3] O-ring is required (which is normally included on the fitting) to ensure a good seal.

A lines and fittings kit can be purchased to supply the common adapters used to connect to the manifolds. See *User-Replaceable Parts and Accessories* for more information.

The 8370A is available with only one type of manifold block. The pressure connection types are:

- Supply DH500
- Test DH500
- Reference 1/4 inch NPT
- Exhaust 1/4 inch NPT
- Vent 1/8 inch NPT

DH500 is a cone and threaded high-pressure connection equivalent to AE F250C or HiP HF4.

Pneumatic schematics are shown in Figures 4 and 5.

원문: Fluke Calibration 8270A,8370A 메뉴얼(영문) · 제조사 원문 자료입니다. 사양은 제조사 사정에 따라 변경될 수 있습니다.

High-Pressure Modular Controller
Rear-Panel Manifold Pressure Connections

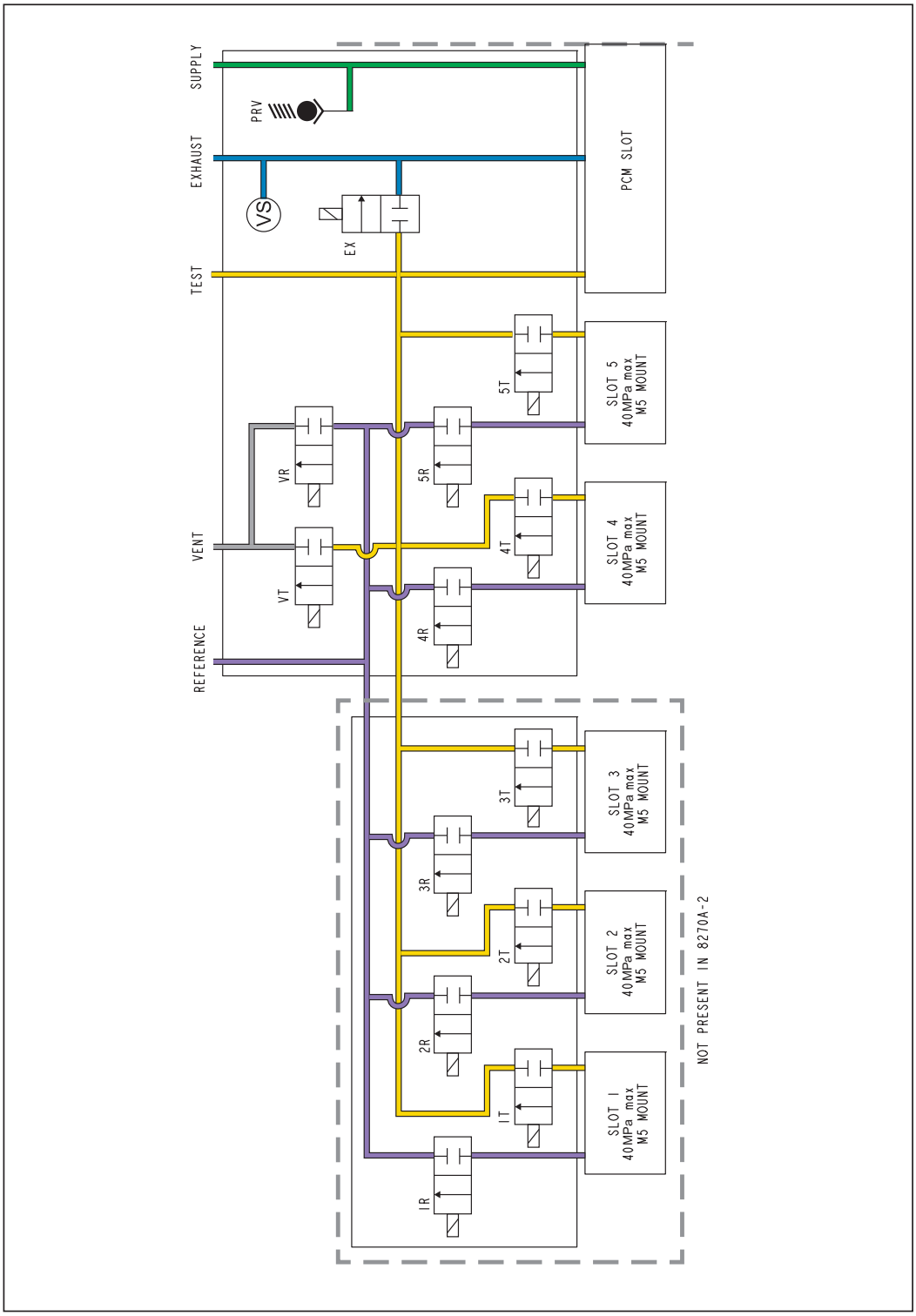

ifb036.eps

Figure 4. 8270A Pneumatic Schematic

원문: Fluke Calibration 8270A,8370A 메뉴얼(영문) · 제조사 원문 자료입니다. 사양은 제조사 사정에 따라 변경될 수 있습니다.

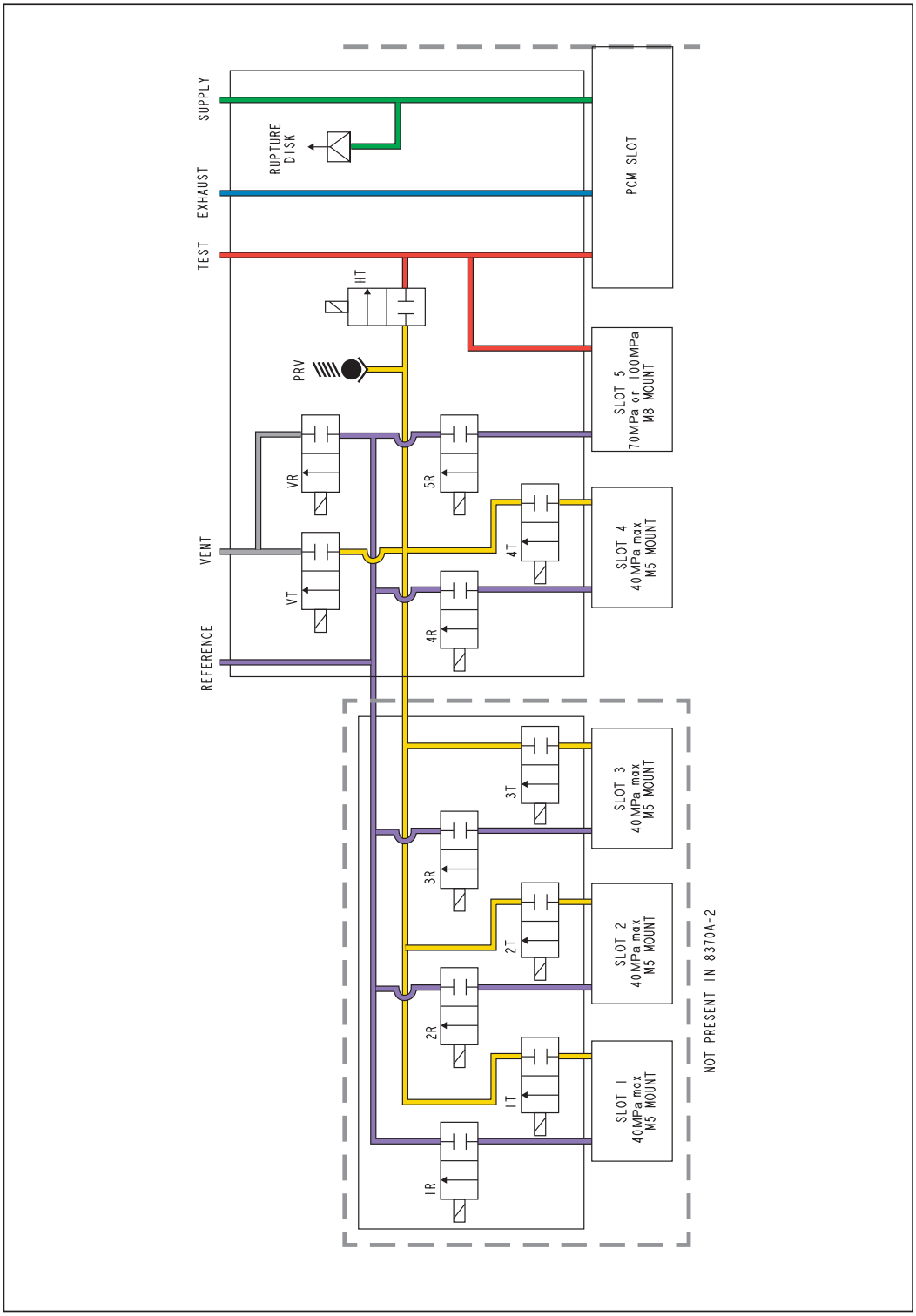

ifb035.eps

Figure 5. 8370A Pneumatic Schematic

원문: Fluke Calibration 8270A,8370A 메뉴얼(영문) · 제조사 원문 자료입니다. 사양은 제조사 사정에 따라 변경될 수 있습니다.

SUPPLY Port

The pressure SUPPLY port must be connected to a regulated source of clean, dry air or nitrogen as directed in *Specifications*. Fluke Calibration recommends that tubing be at least 2 millimeters (0.083 inch) inside diameter and properly rated for the pressure. Length in excess of 3 meters (10 ft) may increase readiness time in some situations.

A continuous, regulated pressure supply of clean, dry, non-corrosive gas at 10 % greater than the highest pressure range should be connected to the Product SUPPLY port. For optimal control performance, the supply pressure should be no greater than 100 times the full scale of the active measurement range. Never exceed the maximum pressure of the Product chassis. The supply pressure can be viewed under the diagnostics **Setup>Diagnostic>Control**.

⚠Caution

To prevent damage to the system, make sure to select the correct size adapter fitting with the correct thread type. Ensure that all hardware used is rated to adequate working pressure, and that all equipment is in proper working order (for example, no cracks or stripped threads).

To prevent damage to the Product, be sure to connect the pressure supply to the SUPPLY port. Connecting to another port can damage the Product.

To prevent damage to the system and to prevent waste of supply gas, install the PCM prior to connecting the supply pressure to the system.

EXHAUST Port (Vacuum Pump if Required)

Typical operation is with the EXHAUST port open to atmosphere (no restriction). A vacuum pump is required to control pressure below atmosphere. Control performance below 7 kPa (1 psi) gauge may be degraded if a vacuum pump is not used. Tubing should have a minimum inside diameter of 6 millimeters (1/4 inch). In confined areas, pipe the exhaust port outside to prevent an accumulation of nitrogen (or other supply gas). It is acceptable to add tubing to the exhaust port for the primary purpose of reducing noise. Do not block the exhaust tube.

⚠Caution

To prevent damage to the Product:

- **Never connect a pressure supply to or plug the Product EXHAUST port.**
- **To avoid building up pressure on the EXHAUST port or on a vacuum pump connected to the EXHAUST port, the vacuum source should either be continuously ON or the EXHAUST port should be bypassed to atmosphere when the vacuum source is OFF. This is because when a supply pressure is applied to the Product SUPPLY port and the Product is not in the vent ON condition, there is typically a constant gas exhaust through the Product EXHAUST port.**

원문: Fluke Calibration 8270A,8370A 메뉴얼(영문) · 제조사 원문 자료입니다. 사양은 제조사 사정에 따라 변경될 수 있습니다.

- **When controlling down in pressure, the Product will exhaust gas through the EXHAUST port. The flow of this gas can be greater than what the vacuum pump can support. When working at higher pressures, Fluke Calibration recommends that the vacuum pump be turned off and equipped with an auto-vent valve.**

TEST Port

Pressure instruments and devices to be tested are connected to the TEST port. Tubing connected from the Test port to the load volume should have an internal diameter >2 millimeter (0.083 inch). For optimal performance, tubing should be <5 meters (15 feet) when minimum diameter tubing is used.

To prevent oils, grease, solvents, and water that could be present in a Device Under Test (DUT) from contaminating the Product, a Contamination Prevention System (CPS) is available for use with the Product. The CPS sits on the bench and provides a platform to test pressure instruments and devices. The CPS connects directly to the TEST port. For more information, see the *CPS-40M-HC40/CPS-100M Instructions*.

Note

Excessive leaks in the test volume affect control stability and can cause measurement errors in the DUT.

⚠Caution

To prevent damage to the Product, when the Product is connected to a system with liquid contaminants, take proper precautions to purge the system and test line. Not doing so can cause Product contamination and result in a need for non-warranty service.

Note

Minimize the length of the test connection tubing to enhance control performance and reduce pressure setting time.

The Product pressure control will not operate properly if there are excessive leaks in the test system. The maximum acceptable leak rate for optimal automated pressure control operation and to ensure in tolerance measurements with default pressure control parameters is ±0.5 % of set pressure/minute. In DYNAMIC CONTROL modes (Dynamic A and Dynamic B), to handle higher test system leak rates, use Control Settings to increase the ready tolerance.

REF Port

The REF port (Reference port) is open to atmosphere for gauge measurements or it can be connected to the reference port of the pressure instruments and DUTs.

Instruments with a low full-scale pressure range require special handling to assure their performance. These instruments are sensitive to atmospheric pressure changes, including disturbances in the atmospheric pressure. The reference side must be carefully controlled or changes due to wind, air handlers, doors shutting, and more will cause major variations in the readings. The Product tracks these changes but it may not track in the same way as the DUT. To control these changes, Fluke Calibration recommends that the reference port (also referred to as the "test-(test minus)" or "low" port of all relevant DUTs be tied to the REF port of the Product.

원문: Fluke Calibration 8270A,8370A 메뉴얼(영문) · 제조사 원문 자료입니다. 사양은 제조사 사정에 따라 변경될 수 있습니다.

The REF port can be sealed from atmosphere in most applications where the test times are relatively short. This isolates the port from pressure changes in the atmosphere and results in very stable pressure measurement and control.

If the test times are relatively long, in addition to connecting the reference ports together, also routinely vent the system by placing it in VENT mode. This will ensure there is no buildup of pressure on the reference port due to temperature effects.

For Products that have a BRM (Barometric Reference Module) installed, the barometer is tied to the reference port. When Gauge mode is used, connect the REF port as noted above. When used in the Absolute mode, if the ambient pressure is not stable, sealing the reference port from atmosphere improves the control stability of the Product.

VENT Port

The VENT Port ties the internal volume to atmosphere when the Product is vented.

Note

Leave the VENT port open to atmosphere to ensure proper operation of the Product.

Controller Settings (Setup Menu)

Set the user preferences from the Setup menu. From the Main screen, touch **SETUP**. The UI shows the Setup menu.

Setup Menu

The Setup menu has these submenus:

Measure Setup – This menu has options and parameters for pressure measurement. See *Pressure Measurement Settings* for detailed information on each menu item.

Tasks - This menu contains selections to configure and run pre-programmed jobs (tasks). See *Tasks* for detailed information on each menu item.

Module Information - This menu contains selections to view the PMM configuration and also make selections regarding which PMMs and mode to use. See *Module Selection* for detailed information on each menu item.

Diagnostic - This menu contains options and parameters to run a diagnostic troubleshooting tool to help identify system, measurement, control, and remote communication problems. See *Diagnostics* for detailed information on each menu item.

Control Setup - This menu contains options and parameters for pressure control. See *Pressure Control Settings* for detailed information on each menu item.

Instrument Setup - This menu contains general instrument options and parameters. See the subsequent section for detailed information on each menu item.

원문: Fluke Calibration 8270A,8370A 메뉴얼(영문) · 제조사 원문 자료입니다. 사양은 제조사 사정에 따라 변경될 수 있습니다.

Note

Once inside the menu structure, touch the arrows at the top of the screen to move backward within the menu paths.

The procedures for these tasks are listed in their respective sections of the manual.

Instrument Setup Menu

The Instrument Setup menu (**Setup>Instrument Setup**) includes these submenus, which are explained in the next sections:

- Instrument Settings
- Remote Port
- External 24 V
- External Valves
- Uncertainty
- About This Instrument
- Restore Factory Default

Instrument Settings Menu

To set user preferences, from the Instrument Setup menu, touch the **Instrument Settings** tab. The Instrument Settings menu is shown.

The sections of the Instrument Settings menu are explained in Table 5.

Note

*A password is required to change the **Date/Time** and **Security** parameters. See* Change Password *below for information about how to change the default password.*

원문: Fluke Calibration 8270A,8370A 메뉴얼(영문) · 제조사 원문 자료입니다. 사양은 제조사 사정에 따라 변경될 수 있습니다.

we measure, we calibrate, we validate.
㈜테솔 · www.tessol.com TS-TL-FLK-073 22 / 68
KOLAS 국제공인교정기관 · ISO/IEC 17025

TS-TL-FLK-073

Table 5. Instrument Settings Menu

Tab	Description
Language	Changes the UI language. Touch the **Language** tab to select **English**, **Italian**, **Spanish**, **Russian**, **Portuguese**, **Simplified Chinese**, **German**, **Japanese**, **French**, **Korean, Czech,** or **Slovak**. From Main menu, hold the **Unlock** button for 3 seconds and the system goes to the Language Selection menu.
Date/Time	Sets the date and time. Use **MM/DD/YYYY**, **DD/MM/YYYY**, or **YYYY-MM-DD** (M= Month, D=Date, Y=Year). To change the format of the date, touch the **Format** tab, select the format and touch **Exit**. To change the date and time, touch the parameter to change (Month, Day, Year) and use the keypad on the right to key in the new value. Push **ENTER** to store the value(s).
Display	Adjusts the aspects of the Display. Touch the **Display** tab to get to the **Brightness** and **Screen Timeout** parameters. For display brightness, touch **Brightness** tab and use the keypad on the front of the Product to adjust the percentage. The screen can also be set to turn off (timeout) after a certain amount of time. Touch the arrow on the Screen Timeout tab and select **1**, **5**, **10**, **15**, **30 minutes,** or **Never**.
Decimal	Specify a decimal separator for your region, either "." or ",". To change the separator, touch the **Decimal** tab.
Screen Capture	The Product can save up to 5 screen captures. You can copy screen captures from the product using a USB memory stick in the USB A port. Push and hold the 0 button on the keypad to capture the screen. Touch the **Screen Capture** tab to enter the menu. From this menu, use the **Next** button to view existing screens, or delete with the **Delete** or **Delete All** buttons.
Clear All Files	When you push **Clear All Files** tab, you are prompted for the password. Once you enter the correct password, any screen capture files will be erased.

원문: Fluke Calibration 8270A,8370A 메뉴얼(영문) · 제조사 원문 자료입니다. 사양은 제조사 사정에 따라 변경될 수 있습니다.

Table 5. Instrument Settings Menu (cont.)

Tab	Description
Change Password	The integrity of Product calibration is protected by a security password that must be entered before new calibration constants can be saved to non-volatile memory. The password also protects the ability to set the date for the internal real-time clock. If the password has not been entered, the Product is secured. Once the password is entered, the Product is unsecured. The Product secures itself when the Setup menus are closed or the product is reset. The Product can be unsecured at any time over the remote interface with the CAL_SECURE command and by entering the password. The Product prompts for the password to unsecure the Product before it can accept new values to be eventually secured. The password contains 1 to 8 digits and is factory set to **8270**. To change the password locally: 1. Touch **Setup Menu>Instrument Setup>Instrument Settings>Change Password**. The Product prompts for the current password. 2. Use the numeric keypad to enter the current password. To change the password over the remote interface use the CAL_PASSWD command. *Note* *If the new password is lost, contact Fluke Calibration Customer Service. Fluke Calibration will supply a new password.*
External 24 V Menu	Selects which driver port, on the rear of the Product, is in use.
External Valves	Use this tab to choose if a Contamination Prevention System (CPS) , Isolation Valve, Abort Valve, Supply Isolation Valve, or Self-Purging Liquid Trap (SPLT) is installed. See the corresponding Instructions sheet for the appropriate accessory for more information.
Uncertainty Menu	Use this menu to view or change uncertainty parameters. Editable parameters are: • Head Height Uncertainty • Include Control Uncertainty • Additional Uncertainty Component 1 • Additional Uncertainty Component 2 • Show Uncertainty • See the Technical Note *Guide to Determining Pressure Measurement Uncertainty for PM200, PM500, and PM600 Modules* located at http://www.Flukecal.com.
About this Instrument	This page of the menu is for information purposes only. The information is useful for the user and any technician that might work on the Product. The information on the page includes: • Model Number • Serial Number • Revision (of the Firmware) • User Interface
Restore Factory Default	To restore the Product to factory settings, touch this tab and then **OK**.

원문: Fluke Calibration 8270A,8370A 메뉴얼(영문) · 제조사 원문 자료입니다. 사양은 제조사 사정에 따라 변경될 수 있습니다.

Remote Port Menu

Use the Remote Port menu to change or view the USB, GPIB, RS-232, and Ethernet port settings explained in Table 6.

Table 6. Remote Port Menu

Tab	Description
USB Setup	Selects whether the remote interface (Remote IF) is from a Computer or Terminal. Specifies the End of Line character (EOL) as Carriage Return (CR), Line Feed (LF), or Carriage Return and Line Feed (CRLF).
RS-232 Setup	Use this menu to specify the RS-232 communication parameters. The editable parameters are: • Data Bits • Stop Bits • Flow Control • Parity • Baud • EOL • Remote IF • Set EOF • Touch **Defaults** to reset the RS-232 port to its default values.
Emulation Mode	From this menu, and with remote commands, the Product can emulate a variety of different instruments. Refer to the *Remote Programmers Guide* on the Fluke Calibration website for a list of emulated products.
GPIB (IEEE-488) Address	Specify the GPIB Address from this tab. Touch the tab and use the numeric keypad on the Product or PC to change the address.
Ethernet Setup	Use this menu and the numeric keypad or PC keypad to specify or edit these parameters: • Host Name • IP Address • Gateway • Subnet Mask • DHCP (ON or OFF) • Remote IF (interface) • Port

원문: Fluke Calibration 8270A,8370A 메뉴얼(영문) · 제조사 원문 자료입니다. 사양은 제조사 사정에 따라 변경될 수 있습니다.

Front-Panel Features

This section is a reference for the front and rear panel features and the User Interface (UI) touchscreen. The front-panel features (including all controls, displays, indicators, and terminals) are shown and explained in Table 7.

Table 7. Front-Panel Features

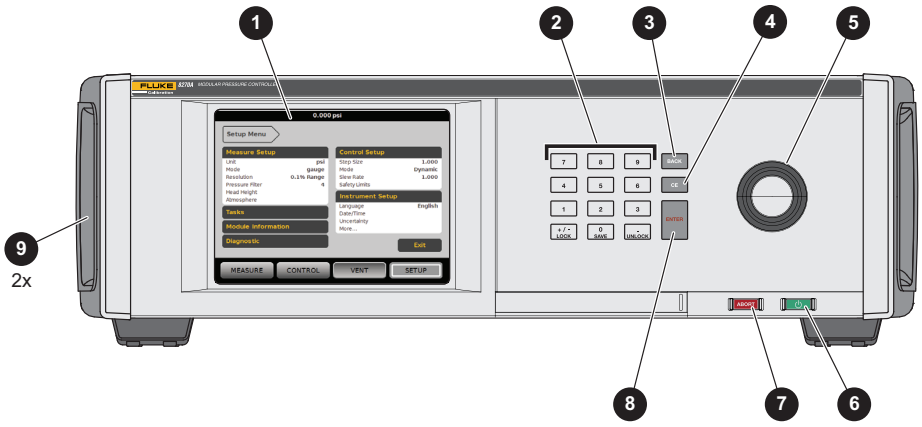

Item	Description
1	The color touch-sensitive display shows the measured pressure, control setpoint, and other active conditions and messages. The display provides controls not available with the keys alone. The interface is made up of multiple menus, described throughout this manual.
2	Numbered keys to change numerical values on the Product user interface. To enter a value, touch an editable section of the display and then change the numerical values with the numbered keys. When entering a new number, there is no need to push back or **CE** to clear the current number. Simply type the new number. Push **ENTER** to accept and set the entry. For example, to set an output of 100 psi, select the editable field on the touchscreen and then push **1** **0** **0** **ENTER**. *Note* *The Product will only control pressure when in the Control mode. See* Control Modes *for more information.*
3 **BACK**	Backspace key - As a new output value is entered with the numbered keys, use the backspace key to delete the last key entry.
4 **CE**	Clear Entry clears the value entry in progress.

원문: Fluke Calibration 8270A,8370A 메뉴얼(영문) · 제조사 원문 자료입니다. 사양은 제조사 사정에 따라 변경될 수 있습니다.

Table 7. Front-Panel Features (cont.)

Item	Description
5	Use the Jog Wheel to make fine adjustments to the applied pressure. When turned, the applied pressure changes by the least significant digit based on the measurement resolution refer to *Measurement Resolution* for more information. Jogging the pressure with the Jog Wheel adjusts the Setpoint value in any mode but will only actively change the applied pressure while in Control mode. See the subsequent section for more information on jogging pressure. Turn counter-clockwise to decrease pressure or clockwise to increase.
6 ⏻	Puts the Product into standby mode. In standby, the display is off and the keys are disabled. Standby mode also disables remote operation. See *Turn on the Product*.
7 ABORT	Emergency abort button that immediately vents the system pressure and stops all pressure control. In addition, remote communication is stopped and the Product enters a safety mode until manually deactivated. See *Vent* and *Abort* for more information.
8 ENTER **(ENTER)**	**ENTER** key used to accept and set numerical entries.
9	Handles

원문: Fluke Calibration 8270A,8370A 메뉴얼(영문) · 제조사 원문 자료입니다. 사양은 제조사 사정에 따라 변경될 수 있습니다.

Rear-Panel Features

Rear-panel features (including all terminals, sockets, and connectors) are shown in Table 8.

Table 8. Rear-Panel Features

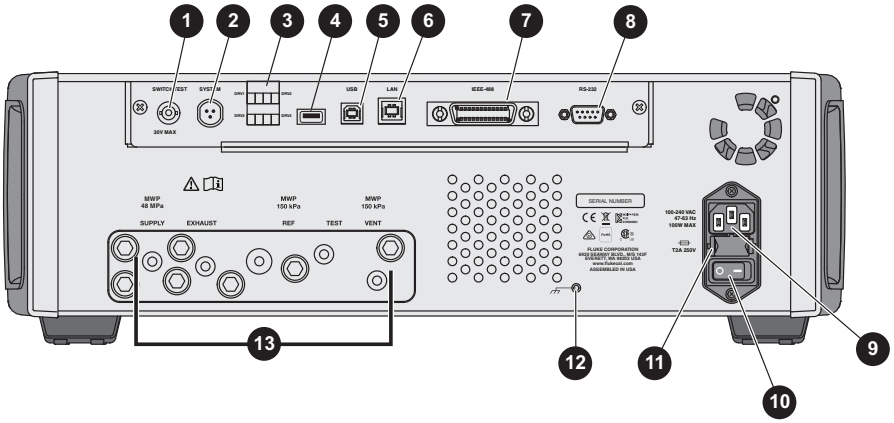

ifb009.eps

Item	Description
① Switch Test Jacks	Switch test inputs used to connect a pressure switch to the Product for pressure switch testing. See *Switch Test*. The switch test input is a BNC connector. Use Pomona part number 5187-C-60 to connect to the switch being tested. ⚠**Caution** **To avoid damage to the Product, do not connect more than 30 V (with respect to Chassis ground) to these terminals.**
② System Bus Connector	Connector for system mode. See *System Mode* for more information.
③ 24 V External Drivers	The external drivers are 24 V dc outputs that can be individually controlled in the Setup menu. Drivers also operate specific accessories such as the Contamination Prevention System (CPS), Self Purging Liquid Trap (SPLT), External Abort Valve, Isolation Valves, and other available accessories. When an accessory is connected and turned on in the Setup menu, the software automatically reserves the use of that driver for the accessory and changes the state of the driver as necessary to operate the accessory.
④ USB-A	For firmware upgrades by inserting a standard USB memory stick with the new firmware files on it. Screen captures and test results can be moved from the Product to the PC.
⑤ USB-B	Use to connect the Product to a PC as a serial COM port. Refer to the *Remote Programmers Guide* on the Fluke Calibration website for more information on remote operation.
⑥ Ethernet Connector	100 Base/T Ethernet Connector for Remote Operation Interface. Refer to the *Remote Programmers Guide* on the Fluke Calibration website for more information on remote operation.

원문: Fluke Calibration 8270A,8370A 메뉴얼(영문) · 제조사 원문 자료입니다. 사양은 제조사 사정에 따라 변경될 수 있습니다.

Table 8. Rear-Panel Features (cont.)

Item	Description
⑦ IEEE-488 Connector	IEEE-488.2 remote operation interface. Refer to the *Remote Programmers Guide* on the Fluke Calibration website for more information on remote operation.
⑧ RS-232 Connector	RS-232 remote operation interface. Refer to the *Remote Programmers Guide* on the Fluke Calibration website for more information on remote operation.
⑨ AC PWR INPUT Connector	A grounded male three-prong connector that accepts the mains power cord.
⑩ Master ON/OFF Switch	Supplies and disconnects mains power to the unit. This switch must be in the ON (I) position before the Standby button on the front panel will function.
⑪ F1 Fuse Holder	Line power fuse. See *Fuse Replacement* for fuse rating information and the fuse replacement procedure.
⑫ Chassis Ground	A threaded connection that is internally grounded to the chassis. If the Product is the location of the ground reference point in a system, this binding post can be used for connecting other instruments to earth ground. (The chassis is normally connected to earth ground through the three-conductor line cord instead of through the earth ground binding post.)
⑬ Removable Manifold/ Pressure Connection	All of the pressure connections are made on the rear panel through a replaceable manifold. For the 8270A, the manifold comes in three localized versions: NPT, BSP, and SAE. The 8370A is available with only one manifold type. See *Rear-Panel Manifold Pressure Connections* for more information. See Specifications for pressure limitations for each port.

원문: Fluke Calibration 8270A,8370A 메뉴얼(영문) · 제조사 원문 자료입니다. 사양은 제조사 사정에 따라 변경될 수 있습니다.

Turn on the Product

To turn on the Product, turn on the main power switch, located on the left-rear of the Product when looking at it from the front. When the Product is turned on, it takes approximately 50 seconds to complete its power-up process. Push ⏻ on the front right side of the Product.

Note

Push ⏻ to place the Product into standby at any time.

For the Product to perform to listed specifications, a warm-up period is required after the Product is turned on or when a new PMM is installed. See 8270A/8370A Product Specifications at Flukecal.com for required warm up times.

After the power-up process, the Product shows the Main menu (see Figure 6).

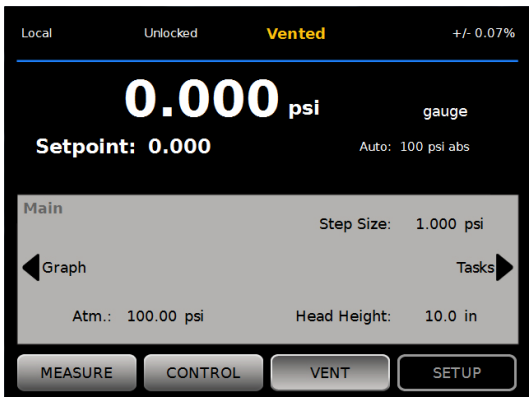

huo001.jpg

Figure 6. Main Screen

Main Menu

Use the Main menu to access functions and other menus. Refer to Table 9 for information about each Main menu item. The submenus for Control Settings, Graph, and Tasks are in Tables 10, 11, and 12.

원문: Fluke Calibration 8270A,8370A 메뉴얼(영문) · 제조사 원문 자료입니다. 사양은 제조사 사정에 따라 변경될 수 있습니다.

Table 9. Main Menu

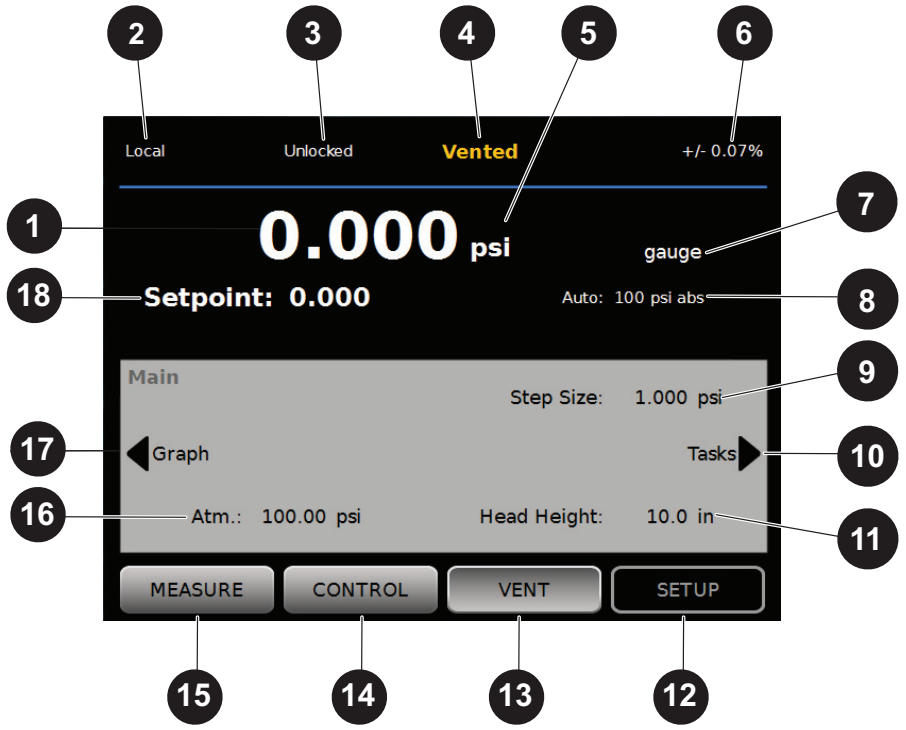

Item	Indicator/Name	Function
1	Pressure Measurement	Shows the pressure measured by the active PMM.
2	Local / Remote	Shows when the Controller is under remote operation by a PC. See the *6270A, 8270A, 8370A Remote Programmers Guide* for more information. *Note* *When the Product enters Remote mode, the front panel is automatically locked to prevent accidental changes. See* ③.
3	Locked/Unlocked	When the screen is locked, the front panel keys and touch display are locked. Push and hold down UNLOCK for 4 seconds to lock or unlock the screen.
4	Measurement Indicator	Shows when the pressure is stable and ready for a measurement. See *Pressure Measurement* for more information.
5	Unit of Measure	Shows the unit of measure and opens a menu to change the unit of pressure.

원문: Fluke Calibration 8270A,8370A 메뉴얼(영문) · 제조사 원문 자료입니다. 사양은 제조사 사정에 따라 변경될 수 있습니다.

Table 9. Main Menu (cont.)

Item	Indicator/Name	Function
6	Measurement Uncertainty	Shows the measurement uncertainty based upon the uncertainty of the currently-selected PMM and the settings in the Uncertainty Setup menu. See Table 6.
7	Measurement Mode	Shows the active measurement mode and opens a menu to change the measurement mode. Modes supported - Absolute, Gauge, and Tare. See *Unit and Custom Units*. See *Measurement Modes*.
8	PMM Selection Mode and Current Range	Opens a menu to manually select a specific PMM or to select an automatic selection mode. See *Module Selection*.
9	Step Size	Adjust the step size amount. To the left are the keys to step up or down by the amount set in the field.
10	Tasks	Menu that gives quick access to the pre-programmed tasks. See *Tasks*.
11	Head-height Correction	Shows the current head-height correction and opens a menu that contains user-configurable settings for head height, units, and type of gas in use. See *Head Height*.
12	SETUP	Opens the Setup menu. See *Instrument Setup Menu*.
13	VENT [1]	When this mode is selected, the Product vents at a controlled rate versus a much faster rate if the emergency abort button is pushed. See *Vent and Abort* and *Operating Modes*.
14	CONTROL	When this mode is selected, the Product actively controls to a target pressure. The Control mode relies on the settings in the Control Setup menu to control pressure. See *Operating Modes.*
15	MEASURE	When this mode is selected, the Product stops pressure control to let the user record a measurement. Pressure control will not resume until Control is pushed. See *Operating Modes*.
16	Atm	Select the barometric reference to use or set a custom atmospheric value to use for absolute measurements.
17	Graph	Opens the Graph page of the menu. If the Electrical Measurement Module (EMM) is connected this changes to EMM/HART. See Kit-EMM300 instruction sheet for more information on it.
18	Target Pressure	Shows the current target pressure value and opens a menu to set a target pressure. See *Set Target Pressure (Setpoint)*.
[1]	Venting while a program or task is running cancels the action.	

원문: Fluke Calibration 8270A,8370A 메뉴얼(영문) · 제조사 원문 자료입니다. 사양은 제조사 사정에 따라 변경될 수 있습니다.

Table 10. Control Settings

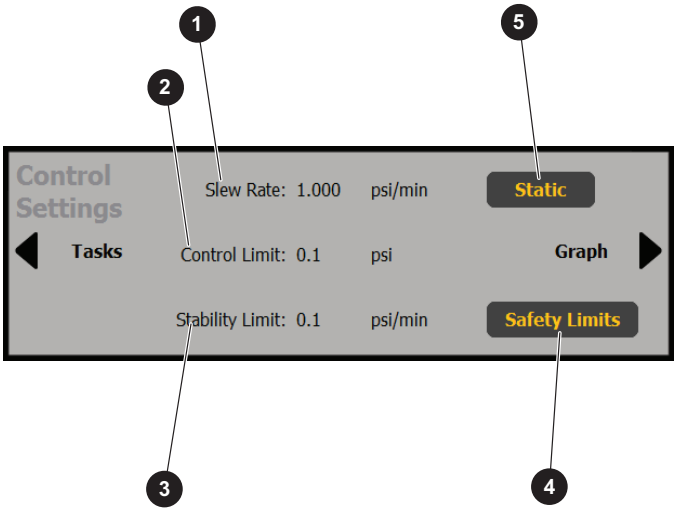

huo012.eps

Item	Indicator/Name	Function
1	Slew Rate	The slew rate is a user-configurable control parameter to adjust how fast the Product controls pressure to the setpoint.
2	Control Limit (Shown only when Static is selected)	Related and used only with the Static Control mode, the control limit is used to set an upper and lower pressure limit around the Setpoint. The Product keeps the pressure within defined user limits. See *Static Control Mode* and *Control Limits (Only for Static Control)*.
3	Stability Limit (Shown only when Static is selected)	Related and used only for the Static Control mode, the stability limit is a configurable tolerance to define the ready condition for the measurement. The measurement indicator shows “Not Ready” until the pressure is as stable as the value set in the stability limit. See *Stability Limits (Only for Static Control)* for more information.
	Ready Tolerance (Shown only when a Dynamic mode is selected. Not shown in figure)	Related and used only with Dynamic Control modes, the Ready Tolerance is a configurable band to define the ready condition for the measurement. The band creates a positive and negative boundary around the Setpoint pressure that is specified in pressure units or %range of selected module. The measurement indicator shows “Not Ready” until the pressure is stable within the band. See *Ready Tolerance* for more information
4	Safety Limits	Protective user-configurable limits to protect the DUT from over-pressure. An upper, lower, and vent limit can be manually set. See *Safety Limits*.
5	Pressure Control Mode	Shows and switches the active control mode between Dynamic-A, Dynamic-B, and Static. See Pressure Control Settings.

원문: Fluke Calibration 8270A,8370A 메뉴얼(영문) · 제조사 원문 자료입니다. 사양은 제조사 사정에 따라 변경될 수 있습니다.

Table 11. Graph

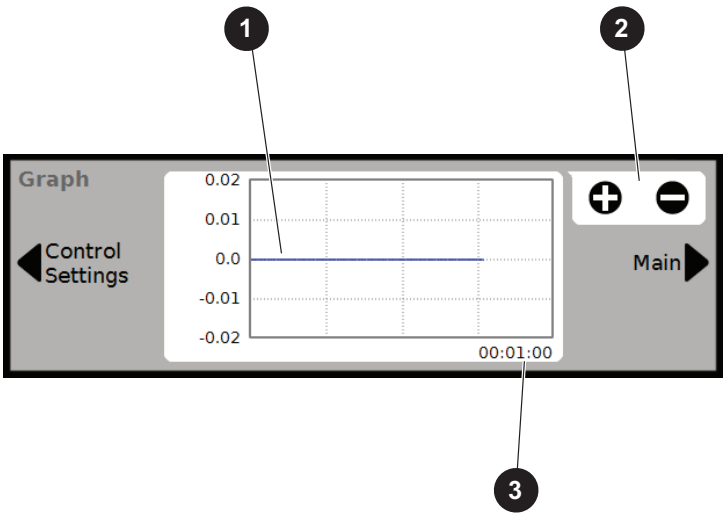

Item	Indicator/Name	Function
1	Graph	Scalable graph that shows the current pressure and historical pressure behavior for up to 96 hours of elapsed time. This graph is an informational tool only and cannot be saved.
2	Zooms	Magnifies the graph by adjusting the time scale.
3	Time Scale	Shows the time scale of the graph.

원문: Fluke Calibration 8270A,8370A 메뉴얼(영문) · 제조사 원문 자료입니다. 사양은 제조사 사정에 따라 변경될 수 있습니다.

Table 12. Tasks

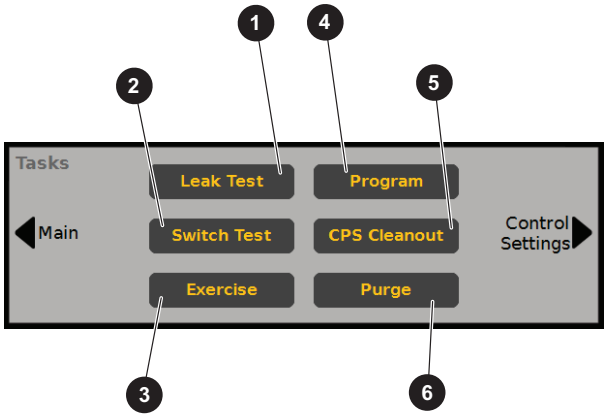

huo013.eps

Item	Indicator/Name	Function
1	Leak Test	Opens a menu to configure and do a leak test on the system. See *Leak Test*.
2	Switch Test	Preprogrammed task to test a pressure switch dead band.
3	Exercise	Opens a menu to configure and exercise a DUT. See *Exercise*.
4	Program	Automated testing interface to make, edit, modify, save, and run a user-configured automated test. See *Program*.
5	CPS Cleanout (Disabled when CPS is OFF in the Setup Menu)	Predefined sequence that cleans out the CPS with low pressure. Useful after testing a very dirty DUT where cross contamination could be a factor.
6	Purge (Disabled when CPS is OFF in the Setup Menu)	Opens a menu to configure and purge the DUT and CPS. See *Purge (if CPS is installed)*.

원문: Fluke Calibration 8270A,8370A 메뉴얼(영문) · 제조사 원문 자료입니다. 사양은 제조사 사정에 따라 변경될 수 있습니다.

Operation

This section explains the pressure control settings of the Product.

Operating Modes

The product has three operating modes: Control, Measure, and Vent.

Control Mode – When in Control mode, the Product actively controls pressure as defined by the Setpoint and will keep the pressure near the Setpoint per the active control mode (see *Control Modes*). Control is the only mode where the Product actively controls pressure. The setpoint value can be changed in any of the three modes, but the Product is idle until **CONTROL** is touched.

Vent Mode – When in Vent mode, all pressure on the test port is vented to atmosphere.

Measure Mode – When in Measure mode, the Product is holding pressure and pressure control is idle. This mode provides a method to take a measurement without control noise.

Set Target Pressure (Setpoint)

Target pressure or “Setpoint” is the numerical value of the pressure that the Product controls when commanded. The Setpoint number can be entered into the Setpoint field while in any of the operation modes (Measure, Control, and Vent) however, the Product will not control pressure to the Setpoint unless it is in Control mode. While in the Control mode, if a new Setpoint number is entered and accepted, the Product immediately controls to the Setpoint. Once at the Setpoint, the Product then uses the active Control mode to keep the pressure between the upper and lower limits (see *Control Modes*).

Note

Jogging the pressure with the Jog Wheel adjusts the Setpoint value in any mode but will only actively change the applied pressure while in Control mode. See the subsequent section for more information on jogging pressure.

To set a setpoint pressure:

1. Touch the setpoint field or push the **ENTER** button on the keypad to activate the field.
2. Use the numeric keyboard to enter the number.
3. Push **ENTER** to accept. You do not need to touch **Clear** to enter a new value, just key in the new value and it will overwrite the previous value. At any time, touch outside the field to cancel the entry.

Step Pressure Up or Down

The pressure Setpoint can be changed with the Step function. The Step function is used primarily when taking pressure steps in equal pressure increments and is only available when in Control mode. The size of the pressure step is user-defined. To step the pressure, enter a value for the step size and then use the up and down arrows in the Main Display area to step that amount.

Jog Pressure

The Jog function can help calibrate mechanical gauges, such as a dial gauge. Use the jog wheel to change the pressure until the mechanical gauge indicates a cardinal point. The user can then read the higher resolution Calibrator to determine the actual pressure value when the mechanical gauge is indicating a cardinal point. To jog the pressure, rotate the jog wheel clockwise or counter-clockwise to increment or decrement the pressure by the lowest significant digit of the active measurement resolution. For example, if **0.01** measurement resolution is set and the unit is psi, turning the Jog Wheel will increment the pressure by **0.01** psi per knob detent.

Vent and Abort

Touch **Vent** to completely vent the applied pressure at a controlled rate. When **Vent** is pushed, the Product prompts for confirmation before venting to prevent accidental venting or accidently canceling tests. If **Vent** is touched when a test is in progress and the dialog is confirmed, the test immediately stops and the Product vents all pressure in the system. To protect the operator and to remove pressure from the system before maintenance, the vent is also actuated when the front panel is opened to remove pressure from the system.

The Product has an automatic pressure-relief function called Auto Vent that releases pressure if it exceeds upper or lower pressure limits. See the *Auto Vent* section for more information on this feature.

For emergency pressure relief, the red **Abort** button on the bottom right of the front panel, immediately vents all pressure from the system and cancels any program or task in progress. In addition, the Product enters a safety mode and disconnects remote operation. The Product stays in this mode until exiting safety mode by confirming the on-screen dialog.

⚠Caution

To avoid equipment damage, use the Abort button for emergency situations only. Abort vents pressure as quickly as possible without restriction. This rate of pressure drop could damage some sensitive DUTs.

원문: Fluke Calibration 8270A,8370A 메뉴얼(영문) · 제조사 원문 자료입니다. 사양은 제조사 사정에 따라 변경될 수 있습니다.

Pressure Measurement

A visual measurement indicator on the UI (also known as the “Ready indicator”) indicates when pressure control settings are satisfied and pressure can be measured. See Table 13 for a list of measurement indicators and their definitions. See *Pressure Control Settings* for detailed control settings information for different control modes.

Table 13. Measurement Indicator

Indicator	Definition
Not Ready	Indicates control settings are not satisfied. The Product cannot make a measurement at this time.
Ready	Indicates control settings are satisfied. The Product can make a measurement at this time.
Vented	This is shown when the Product is vented to indicate that the Product can now make an ATM or 0 psig measurement.
Venting…	This is shown when the Product is in the process of venting all of the test pressure.

Pressure Control Settings

This section explains the pressure control settings of the Product. Some of these settings can be accessed on the main screen but all are located in the Control Settings in the Setup Menu.

Control Modes

The Product offers different control modes to control pressure:

- **Dynamic A** mode sets the target pressure and constantly adjusts to maintain the target. The control is tuned to reach the setpoint quickly, which can result in momentary overshoot.
- **Dynamic B** mode sets the target pressure and constantly adjusts to maintain the target. The control is tuned to minimize the amount of overshoot when reaching the target.
- **Static** mode sets the target pressure and stops controlling, adjusting only when the measured pressure has exceeded specific limits.

The subsequent sections give more information on each mode. When controlling to a setpoint, the Product appears to stop at approximately 10 % away from the setpoint. It will quickly fine tune the valve settings before it gets to the setpoint. This may appear as a leak in the system but is normal system operation.

원문: Fluke Calibration 8270A,8370A 메뉴얼(영문) · 제조사 원문 자료입니다. 사양은 제조사 사정에 따라 변경될 수 있습니다.

we measure, we calibrate, we validate.
㈜테솔 · www.tessol.com TS-TL-FLK-073 38 / 68
KOLAS 국제공인교정기관 · ISO/IEC 17025

TS-TL-FLK-073

Dynamic Control Modes

Dynamic Control sets the pressure to the target value and then controls pressure to keep it within the ready tolerance at the Setpoint value, see Figure 7. Dynamic Control is beneficial for most applications because it automatically compensates for changes to the system from adiabatic affects and small leaks. Dynamic Control is the default control mode when the Product is turned on.

Note

Dynamic Control generates a very small amount of pressure noise due to continuous pressure control. The pressure noise is undetectable in most DUTs. For high-end sensitive DUTs where pressure noise is a concern, use Static Control for the test.

In Figure 7, the default dynamic ready tolerance value is 0.005 % of range. On the **Setup>Control Setup** screen the **Specify as % Range** setting is used to set the control settings as % Range or pressure unit values. Fluke Calibration recommends to leave this set to **Yes** so the control settings scale appropriately when different ranges are active.

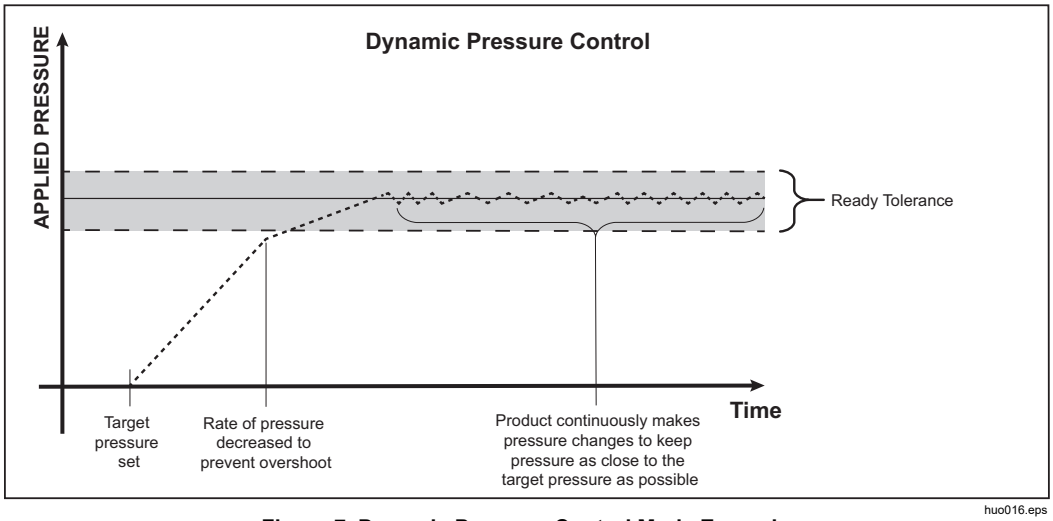

Figure 7. Dynamic Pressure Control Mode Example

As an example, if the range is 2000 psi, the default ready tolerance is 0.1 psi (2000 psi x 0.005 % = 0.1 psi). At a target pressure of 1000 psi, the Product gives a **Ready** condition if the pressure is between 999.9 psi and 1000.1 psi.

원문: Fluke Calibration 8270A,8370A 메뉴얼(영문) · 제조사 원문 자료입니다. 사양은 제조사 사정에 따라 변경될 수 있습니다.

Static Control Mode

Static Control sets the pressure slightly above or below the target pressure value and then turns off active pressure control, see Figure 8. The pressure is allowed to naturally change until it is outside the Control Limit band. This pressure control sequence repeats until the target pressure is changed or the test is complete.

The advantage of this control mode is that pressure can be set and measured without noise from the pressure control system. Static Control shows in the user interface as Static. A **Ready** indication is predicated on pressure being inside the Control Limit and the rate of change of pressure is less than the Stability Limit.

The default Control Limit is zero (0) and the default Stability Limit is 0.7 kPa/min (0.1 psi/min).

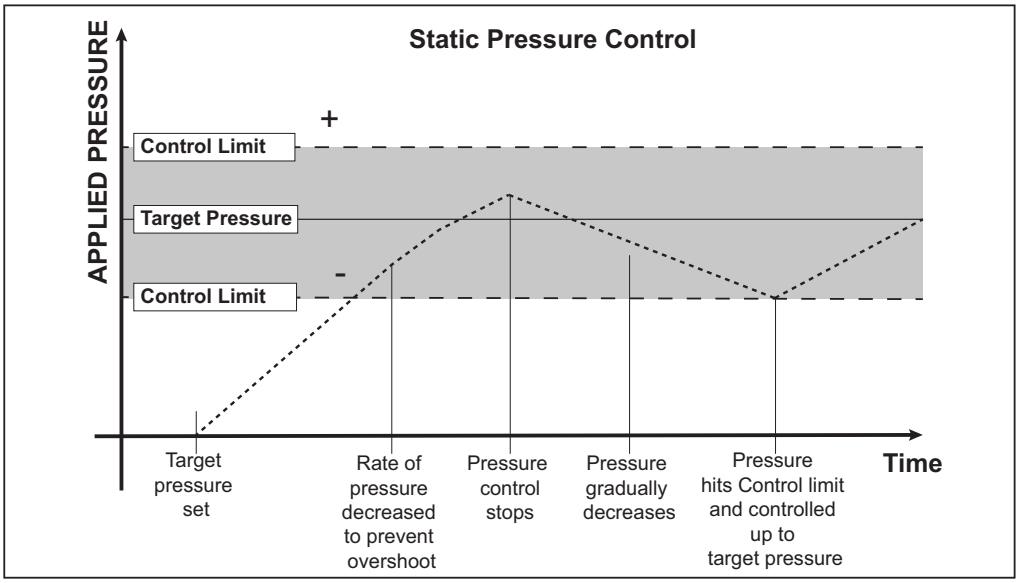

Figure 8. Static Pressure Control Mode Example

As an example, if the target value is 1000 psi, and the Control Limit is manually set to 0.5 psi and the Stability Limit is set to 0.1 psi/min, the Product gives a **Ready** condition if the pressure is between 999.5 psi and 1000.5 psi and the rate of change of pressure is less than 0.1 psi/min.

Slew Rate (Rate of Pressure Change)

Slew Rate is a user-defined maximum pressure rate of change. The Product controls this pressure with minimum overshoot into a wide variety of external volumes at its highest slew rate. In most applications Fluke Calibration recommends that the slew rate be set at its maximum rate value. This provides the highest speed control without jeopardizing overshoot or control stability properties. In applications where the DUT could be damaged by high rate of pressure change, it can be necessary to slow down the slew rate (control speed). The Product control algorithm limits the rate of pressure change to the slew rate. On calibrators with full-scale pressures ranges <70 kPa (10 psi), it is common to reduce the slew rate to <25 % of full scale/min to improve on control overshoot characteristics.

원문: Fluke Calibration 8270A,8370A 메뉴얼(영문) · 제조사 원문 자료입니다. 사양은 제조사 사정에 따라 변경될 수 있습니다.

Safety Limits

The Product has user-configurable safety limits that protect the DUT from being inadvertently over-pressured. See below for more information on each limit. (**Setup>Control Setup>Safety Limits**)

Upper Limit

The upper limit is a safety limit that protects the DUT from being inadvertently over-pressured. The upper limit is typically set just over the full-scale pressure of the DUT. If a Setpoint greater than the user-defined upper limit is entered, the Product does not accept the value and generates an error code. While in Control mode, if pressure exceeds the user-defined limit, the Product changes to the Measure mode and again shows an error message.

Lower Limit

This is the same as the high limit except it protects the DUT from low pressure limits.

Auto Vent

This is the defined maximum pressure that the Product can reach prior to venting the test port to atmosphere.

Pressure Measurement Settings

The Pressure Measurement menu contains all options and parameters related to how the Product measures pressure. See the subsequent sections for more information on each setting.

Unit and Custom Units

The Product offers a large selection of standard engineering units that can be selected to satisfy a majority of calibration requirements. Table 14 lists the standard units that come with the Product. To select a unit, touch **Setup>Measure Setup>Unit** and select the necessary unit.

Special calibrations can require an uncommon or special unit of measure. These nonstandard units are referred to on the Product as Custom Units. For custom units, touch **Setup>Measure Setup>Custom Units**. From this screen, enter the necessary parameters for a maximum of four custom units.

원문: Fluke Calibration 8270A,8370A 메뉴얼(영문) · 제조사 원문 자료입니다. 사양은 제조사 사정에 따라 변경될 수 있습니다.

Table 14. Pressure Units

Abbreviation	Full Name	Conversion (Multiply to convert to kPa)
MPa	megapascal	1000
kPa	kilopascal	1
hPa	hectopascal	0.1
Pa	pascal	0.001
mmH_2OC	conventional millimeters of water	0.00980665
psi	pound-force per square inch	6.894757
inH_2O 4 °C	inch of water (4 °C)	0.249082008
inH_2O 20 °C	inch of water (20 °C)	0.248642103
inH_2O 60 °F	inch of water (60 °F)	0.24884
inH_2O 25 °C	inch of water (25 °C)	0.248502277
bar	bar	100
mbar	millibar	0.1
kgf/cm^2	kilogram-force per square centimeter	98.0665
atm	standard atmosphere	101.325
cmH_2O 4 °C	centimeter of water (4 °C)	0.098063783
Torr	Torr	0.1333224
mTorr	millitorr	0.0001333224
mmHg 0 °C	millimeter of mercury (0 °C)	0.133322
cmHg 0 °C	centimeter of mercury (0 °C)	1.33322
inHg 0 °C	inch of mercury (0 °C)	3.38638
inHg 60 °F	inch of mercury (60 °F)	3.37685
knots	knots indicated airspeed	per NASA TN D-822
km/hr	kilometer per hour	per NASA TN D-822
feet	feet altitude	per MIL-STD-859A
meters	meters altitude	per MIL-STD-859A

원문: Fluke Calibration 8270A,8370A 메뉴얼(영문) · 제조사 원문 자료입니다. 사양은 제조사 사정에 따라 변경될 수 있습니다.

Measurement Modes

The three Measurement Modes on the Product are Absolute, Gauge, and Tare:

Absolute Mode – An absolute pressure measurement is made in relation to a perfect vacuum. A value of 0 represents a perfect vacuum. Certain ranges of PMMs are intrinsically absolute mode measurement modules. This is designated in their model number by having an 'A' at the beginning of the range designation section of the model number (for example, PM600-A700K). In addition, an inherently gauge mode module (represented by a 'G' at the beginning of the range designation section of the model number) can be used to measure absolute pressure if combined with a Barometric Reference Module.

Gauge Mode – A gauge pressure measurement is made in relation to atmospheric measurement. A value of 0 represents a pressure measurement taken at atmospheric pressure. Certain ranges of PMMs are inherently gauge mode measurement modules. This is designated in their model number by having a 'G' or 'BG' at the beginning of the range designation section (for example, PM500-G700K). A 'BG' designation means bi-directional gauge and thus has the ability to measure both positive and negative gauge (also referred to as vacuum) pressures. In addition, certain intrinsically absolute modules have a built-in barometer, allowing them to measure absolute, gauge, and negative gauge pressures.

Tare Mode – When the Tare mode is initiated, the current pressure reading is zeroed out of the measurement. This provides a method for an intrinsically absolute measurement module to be used to measure gauge mode measurements when not equipped with an internal barometer. This is only appropriate when atmospheric pressure is sufficiently stable.

Depending on the selection of pressure modules installed, one of the above modes may not be available.

Note

The Product shows vacuum pressures as negative values (for example, -465 mmHg). Some vacuum gauges do not show a negative sign (-) in front of the reading because they are used for only vacuum measurements (the vacuum gauge would show "465 mmHg psi vacuum" without the negative sign). To prevent misinterpretation of the vacuum gauge reading compared to the negative value on the Product, look at the gauge face or user documentation to see how the vacuum gauge shows vacuum pressures.

Measurement Resolution

Touch the reading on the display to open the **Resolution** screen to change the measurement resolution. The Measurement Resolution selections are 0.1%, 0.01%, 0.001%, or 0.0001% of the active PMM range (shown as "Range" on the UI).

원문: Fluke Calibration 8270A,8370A 메뉴얼(영문) · 제조사 원문 자료입니다. 사양은 제조사 사정에 따라 변경될 수 있습니다.

Module Selection

The Product selects the active pressure measurement module in these different ways:

Auto – This is the default setting. The Product selects the module with the lowest uncertainty to measure the current pressure.

Fast – The Product selects the module with the lowest pressure range that is sufficient to measure the Setpoint. With this method, the Product does not switch ranges during an upward pressure application but instead switches immediately to the required range and stays on that range. Only modules that were pressurized during the upward excursion are used during the downward excursion. When controlling down in pressure, no module will be selected that was not also used on the upward excursion.

Fixed – The Product always keeps the user-selected range active. With this selection, a setpoint outside the measuring range of the selected module cannot be entered.

Pressure Filter

The pressure filter allows user adjustment from 1 to 99 values in a rolling average. Set the value to 15 as default.

AutoZero

Pressure measurement devices naturally drift with time. This drift appears as an offset. To ensure the accuracy of the measurement, it is important to correct for this drift whenever possible.

Gauge Mode

The zero correction in gauge mode is automatically performed when the system is vented and the pressure is stable, regardless of Autozero settings. At that time, the internal valves are configured such that the test port and reference port see the same pressure and that pressure is open to atmosphere through the vent port. Zero gauge pressure is defined as atmospheric pressure. In this condition, the pressure measurement modules, by definition, measure zero gauge pressure.

Absolute Mode

For all absolute modules except PM500 models with range 700 kPa (100 psi) absolute and lower, the zero correction mode is user-selectable in the Autozero menu (**Setup Menu > Measure Setup > Autozero**). If unsure about Autozero in absolute mode, leave the Autozero setting set to **Manual Entry** and do not use the **Zero** button on the display.

Autozero in absolute mode can be done automatically or manually when the system is vented and the pressure is stable. If a system has multiple absolute mode absolute modules, then a module can be selected to measure the vented barometric pressure and serve as the Autozero reference pressure source. This is always the module with the lowest uncertainty at atmospheric pressure (normally the lowest range absolute module). Select the slot number of this module in the Autozero menu. When the zero correction is performed, all other absolute mode modules will be corrected so their output equals the reading of the selected reference module. Each modules' Autozero value is shown on its calibration information screen as zOffset value.

원문: Fluke Calibration 8270A,8370A 메뉴얼(영문) · 제조사 원문 자료입니다. 사양은 제조사 사정에 따라 변경될 수 있습니다.

If a module is selected as the Autozero reference, but is then removed from the system, the system reverts to manual zeroing mode. The system returns to Autozero mode when the selected module is returned to the system or when you select a different module. For PM500 module zeroing see *PM500 Absolute Zeroing*.

If a sufficiently accurate module is not included in the system, select the Manual Entry zeroing mode in the Autozero menu. In this mode, push the **Zero** button on the main display to initiate the zeroing routine when the system is vented and stable. Enter the current barometric pressure as determined through an external reference such as a barometer or piston gauge. The value must be between 75 kPa to 110 kPa (11 psi to 16 psi). Do not enter zero (0) for this value or your pressure readings will be offset by about 100 kPa (14.6 psi) in absolute mode.

If unsure how Autozero works in absolute mode, it is best to leave the Autozero setting set to Manual Entry and do not user the Zero button on the display.

If a module is selected as the AutoZero reference, but is then removed from the system, the system reverts to manual zeroing mode. The system returns to AutoZero mode when the selected module is returned to the system or when you select a different module.

Atmosphere

Atmospheric pressure (ATM) is most often used to measure absolute pressure with gauge mode modules. This is done by adding ATM to the current gauge mode pressure reading. ATM is also used as the target pressure when venting in absolute mode. From the Atmosphere menu (**Setup Menu>Measure Setup>Atmosphere**), select the barometric reference module (PM200-A100K, PM500-A120K, PM500-BA120K, PM500-A200K, or BRM600-BA100K) or manually enter a barometric pressure value from an external lab barometer. A barometer module must be installed to select a module for the atmospheric pressure source. If **Manual Entry** is selected, enter a suitable uncertainty value because in absolute mode (and also Auto or Fast mode, not Fixed mode) the active module is selected by the lowest uncertainty of the module and the atmospheric uncertainty value (if used). If the uncertainty value is unrealistically low, the manually-entered value of atmospheric pressure may be used and cause incorrect module selection.

Note

Any module selected for ATM cannot be then selected by the user or the controller as the active module to directly measure absolute pressure. If you need to use the selected ATM module to directly measure absolute pressures, then do not select it as the ATM source.

원문: Fluke Calibration 8270A,8370A 메뉴얼(영문) · 제조사 원문 자료입니다. 사양은 제조사 사정에 따라 변경될 수 있습니다.

Head Height

For calibration of a unit under test (DUT) at a different height than the Product, it is necessary to make a head-height correction. The head-height correction is the vertical difference between the reference plane of the DUT to the bottom of the display on the Product in inches, millimeters, or centimeters. See Figure 9.

After the measurement is made, the measurement value is entered into the Product (**Setup Menu>Measure Setup>Head Height**). From the Head Height screen, the measurement units and as medium (N2, Air) can be set. Additionally, the Head Height direction and uncertainty for the DUT, Auxiliary 1, and Auxiliary 2 chassis' can be set. Auxiliary Chassis 1 and 2 are available when an additional chassis is connected to the primary chassis. Select ABOVE if the DUT is above the Product and select BELOW if the DUT is below the Product.

Note

Failure to make a head-height correction can result in an inaccurate pressure measurement.

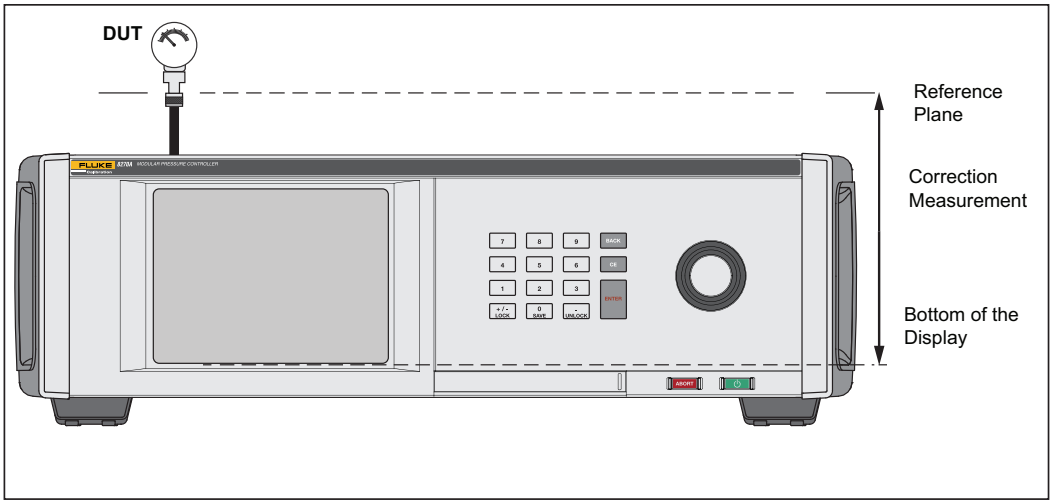

Figure 9. Head-Height Correction

원문: Fluke Calibration 8270A,8370A 메뉴얼(영문) · 제조사 원문 자료입니다. 사양은 제조사 사정에 따라 변경될 수 있습니다.

PM500 Absolute Zeroing

This section explains how to zero the native absolute mode of PM500 pressure modules while in the Product, see Table 15.

Table 15. Absolute PM500 Pressure Modules

Model	Range	Nominal Zeroing Pressure
PM500-A120K	0.08 kPa to 120 kPa	0.080 kPa
PM500-A160K	0.08 kPa to 160 kPa	0.080 kPa
PM500-A200K	0.08 kPa to 200 kPa	0.080 kPa
PM500-A350K	0.08 kPa to 350 kPa	0.080 kPa
PM500-A700K	0.08 kPa to 700 kPa	0.080 kPa
PM500-A1.4M	35 kPa to 1,400 kPa	ATM [1]
PM500-A2M	70 kPa to 2,000 kPa	ATM [1]
[1] Atmospheric (ATM) Pressure is in the range of 70 kPa to 103 kPa.		

Required Equipment

This sections lists the minimum required equipment to zero a PM500, see Table 16. Contact Fluke Calibration to purchase a PM500 Zeroing Kit.

Table 16. PM500 Zeroing Minimum Required Equipment

Equipment	Note
8270A (this procedure is not compatible with the 8370A)	Mainframe/chassis for PM500 Pressure Modules
Vacuum Sensor	For ranges 700 kPa absolute and below. See Table 17 for maximum allowable measurement uncertainty.
Absolute Pressure Reference	For 1.4 MPa and 2 MPa ranges. See Table 17 for maximum allowable measurement uncertainty.
Vacuum Pump	For PM500s that are zeroed sub-atmospheric (700 kPa Absolute). Must be able to evacuate to a pressure <80 Pa.
Metering (Bleed) Valve	
Tubing	As needed.
Fittings/Valves	As needed.

원문: Fluke Calibration 8270A,8370A 메뉴얼(영문) · 제조사 원문 자료입니다. 사양은 제조사 사정에 따라 변경될 수 있습니다.

Table 17 lists the maximum reference measurement uncertainty required for zeroing to maintain published specifications.

Table 17. Maximum Reference Measurement Uncertainty

Model	Maximum Measurement Uncertainty [±]
PM500-A120K	0.0035 kPa (26 mTorr)
PM500-A160K	0.0045 kPa (34 mTorr)
PM500-A200K	0.0025 kPa (19 mTorr)
PM500-A350K	0.0100 kPa (75 mTorr)
PM500-A700K	0.0245 kPa (184 mTorr)
PM500-A1.4M	0.050 kPa (0.0073 psi)
PM500-A2M	0.070 kPa (0.0102 psi)

PM500 Full Scale ≤700 kPa Absolute Zeroing

To zero the PM500:

1. Open the Module Bay and install the PMM into any available slot.
2. Make sure the Product is on and properly warmed up.
3. On the Module Information screen (**Setup Info>Module Information**) select the appropriate slot number of the pressure module that you will zero. The selected Slot menu opens.
4. Select **Zero Module** from the Slot menu.
5. Connect the vacuum sensor, vacuum source, bleed valve, and applicable hardware and tubing to the Test Port of the Product. Figure 10 shows an example setup. Connect the bleed valve as close to the vacuum pump as possible and the reference vacuum sensor as close as possible to the test port.

   An optional 3-way ball valve can be installed at the test port (Figure 10). This setup keeps the vacuum sensor in-situ with the ability to isolate the vacuum sensor when not being used to zero PMMs. When the vacuum sensor is isolated, the test port can be used for other processes.

⚠ Caution

The ball valve and tee in the PK-PMM-ZERO kit are rated only to 20 MPa (3000 psi). Do not leave them connected to the TEST port if the pressure to the TEST port will exceed 3000 psi.

원문: Fluke Calibration 8270A,8370A 메뉴얼(영문) · 제조사 원문 자료입니다. 사양은 제조사 사정에 따라 변경될 수 있습니다.

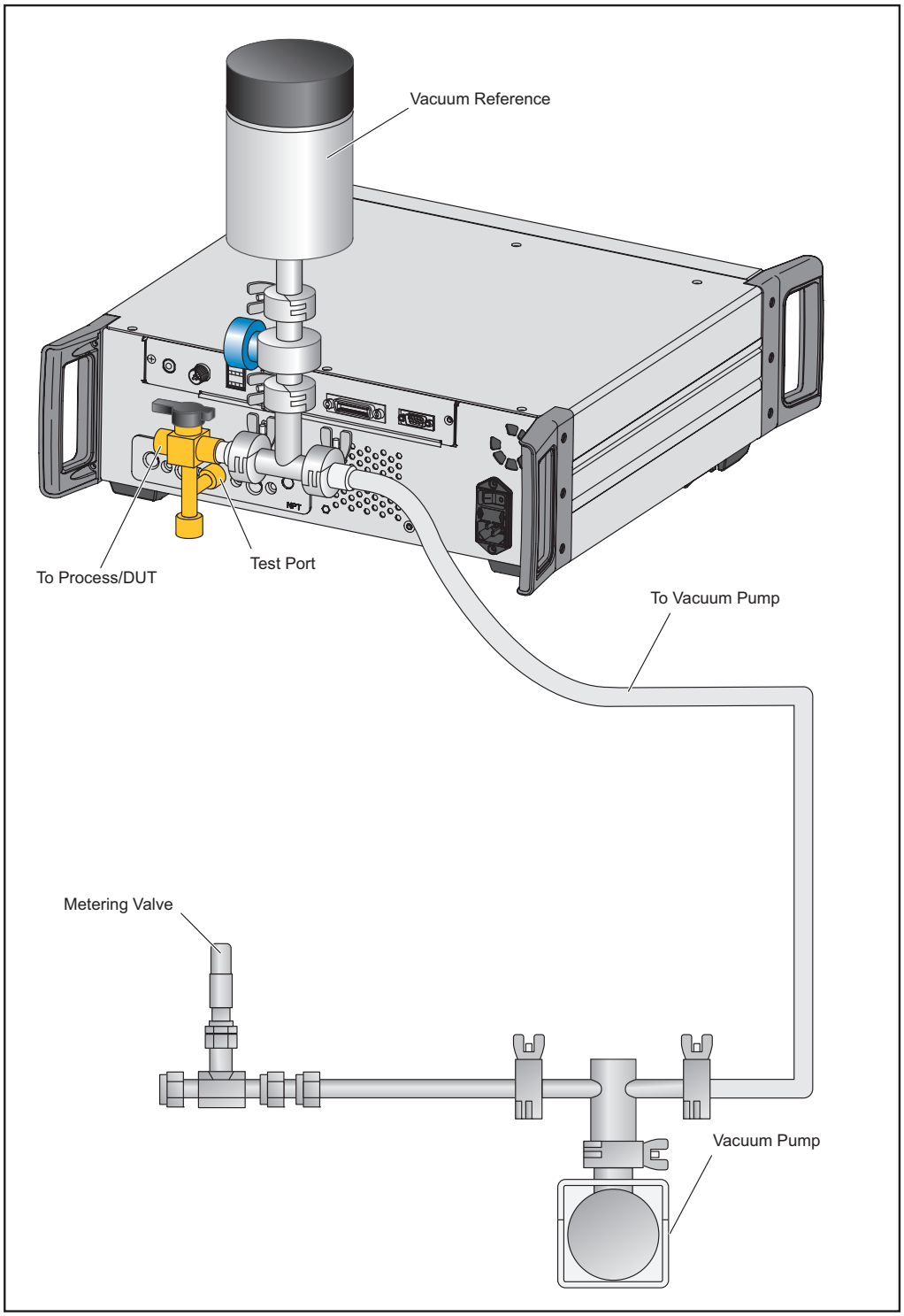

Figure 10. Zero by Vacuum Setup

원문: Fluke Calibration 8270A,8370A 메뉴얼(영문) · 제조사 원문 자료입니다. 사양은 제조사 사정에 따라 변경될 수 있습니다.

6. Use the bleed valve to adjust the pressure/vacuum to 0.08 kPa absolute (±0.01 kPa) and allow the pressure to stabilize.
7. Read the pressure indication from the Vacuum Reference (not on the Product) and enter the value in the **Vacuum Reading** field and select the **Zero** button from the Zero Module menu. The PMM pressure indication reflects the zero-corrected pressure when the zeroing process is complete.
8. Select the BACK to view the zOffset (AutoZero) value in the Calibration Coefficients section of the screen.

PM500 Full Scale >700 kPa Absolute Zeroing

Zero correction in absolute mode is automatic when a module is selected as the AutoZero reference and the system is vented.

Ensure a sufficiently-accurate module is available if you use automatic zeroing. Table 17 lists the maximum allowable uncertainty required to zero the PMM.

If a module is not selected as an AutoZero reference, use manual zeroing mode to zero the PMM.

Tasks

Tasks are pre-programmed routine functions that quickly perform common tests and tasks. The tasks are: Leak Test, Switch Test, Exercise, Program, CPS Cleanout and CPS Purge.

Note

CPS tasks are greyed out and disabled if the CPS is not turned on in the settings.

Leak Test

This function performs an automated leak test to show the rate of pressure loss. To determine this, the Product uses the settings in the test to set the pressure to a Setpoint value. Once stable, the Product turns off pressure control to measure the pressure loss. To help determine if a leak is external to the system or inside the system, the leak test mode can be changed to internal or external. To run an internal leak test the optional external isolation valve accessory must be installed.

To run a leak test, set a few parameters to tell the Product how to perform the leak task. Those parameters are:

Setpoint Pressure – The target pressure of the test.

Stability – This tells how long the pressure is dynamically stabilized at the Setpoint before the test starts. The test does not start until the Product shows the ready indication for the amount of time prescribed.

Duration – After reaching the stability time, the test starts and the Product changes to Measure mode. The system then measures the rate of pressure loss. When the test ends, the average rate of pressure loss per minute is shown.

원문: Fluke Calibration 8270A,8370A 메뉴얼(영문) · 제조사 원문 자료입니다. 사양은 제조사 사정에 따라 변경될 수 있습니다.

Mode – Select Internal or External from this menu. To run an internal leak test, the optional external isolation valve accessory must be installed. When internal is selected, the test port is isolated and the DUT and hoses are not tested. If external is selected, all connections, hoses, and DUTs connected are pressurized. During the leak test, push the **Information** (i) icon to see more detailed status. This same screen shows at the end of the leak test.

Run from Current Pressure – Starts the leak test at the current pressure in the system, ignoring the Setpoint pressure setting.

Switch Test

To test a pressure switch:

1. Go into the **SETUP** menu.
2. Connect the unit under test (DUT) to the switch test terminals on the rear of the Product with the pressure switch terminals to the pressure switch contacts (de-energized dry contacts). The polarity of the terminals does not matter. Connect the test port of the Product to the input of the pressure switch.
3. Select **Tasks>Switch Test**. The **Switch Test** menu is shown. Use the touchscreen and keypad to enter the switch test values.
4. Configure the test:

   Start – Minimum Setpoint pressure

   End – Maximum Setpoint pressure for the test

   Rate – This is the slew rate to determine how quickly the pressure will increase or decrease. For sensitive switches, Fluke Calibration recommends a slower rate.

   Direction – Select whether to increase then decrease pressure (up and down), or a one time upward test (single).
5. Touch **Run** to start the test. The task bar shows the progress of the test and also the state of the switch (Open or Closed). The test is fully automated and progress can be viewed at any time.

   The Product changes the pressure over the specified range at the required rate. When the switch changes state, the Product records the pressure. The results of the switch test are shown on the display when the test completes.

원문: Fluke Calibration 8270A,8370A 메뉴얼(영문) · 제조사 원문 자료입니다. 사양은 제조사 사정에 따라 변경될 수 있습니다.

Exercise

The Exercise function repeatedly pressurizes a DUT to reduce the effects of hysteresis. The Exercise menu specifies a maximum and minimum Setpoint pressure and how many times to repeat the routine (cycles).

To Exercise, set a few parameters so the Product can do the task. These parameters are:

Maximum – Max Setpoint

Minimum – Minimum Setpoint

Cycle – How many times to repeat

Delay – How long to stay at setpoint when reached

Control at Target – If ON, the Product uses the dynamic control mode to keep pressure at the Setpoint. If OFF, the Product uses static pressure control at the Setpoint.

Program

The Program function allows the setup of custom pressure sequences. The Program menu specifies the naming of the program, creation of the program steps, system Measure setup, Controller setup, and DUT uncertainties. The full setup is stored as part of the Named Program and resides with the chassis.

Program Type - Select one of the following types:

- **Pressure** - A simple pressure device without electrical output.
- **mA** - Use the optional EMM to read and record the mA output of the DUT.
- **DCV** - Use the optional EMM to read and record the voltage output of the DUT**.**

Run - Executes the selected program.

New - Enter File name - up to 25 characters, Starting and End Pressure, number of steps Up/Down, Dwell Time (time at setpoint), Max Time (continues to next step, regardless of Dwell time). Supports 99 programs, each program can have up to 99 steps.

Cycles - Number of times to repeat the selected program up to 99.

Edit - Modify program: edit, add, or delete specific program steps.

Setup

- **Measure Setup** - Adjust system Resolution and Head height Parameters. These parameters can be automatically loaded from the existing system settings.
- **Control Setup** - Adjust system Control Limits, Ready Tolerance, Mode – Static/Dynamic. These parameters can be automatically loaded with the existing system settings.

Results - View, save, or delete previous test results.

원문: Fluke Calibration 8270A,8370A 메뉴얼(영문) · 제조사 원문 자료입니다. 사양은 제조사 사정에 따라 변경될 수 있습니다.

DUT – Enter the DUT uncertainty details.

If Program Type is set to Pressure the menu choices are:

- **Use DUT Tolerance: Yes/No** - Toggle this to **On** so that the controller goes to the next program step without prompting the user.
- **Threshold Tolerance** – Sets the threshold tolerance value.
- **Relative Tolerance –** Sets the relative tolerance value.
- **Combination Method - Great of /Addition**
- **Combine the Threshold Tolerance** and **Relative Tolerance**. At each pressure calculate, the threshold and the relative and use whichever is greater or as addition.

If Program Type is set to mA or DCV the menu choices are:

- **DUT Range (0%)** - Configure the DUT lower range
- **DUT Range (100%) -** Configure the DUT upper range
- **Tolerance Method:**

  % Reading - Use reading percent as tolerance method.

  % Span - Use span percent as tolerance method.

  Unit - Use Unit (nominal mA) as tolerance method.
- **Allowable Error:** Configure the acceptable error, associate with Tolerance Method.
- **Closed Loop: ON / OFF**

For a fully-automated test where the program reads the DUT mA measurement and then continues, set **Closed Loop** to **ON**. For manual operation, set **Closed Loop** to **OFF**.

원문: Fluke Calibration 8270A,8370A 메뉴얼(영문) · 제조사 원문 자료입니다. 사양은 제조사 사정에 따라 변경될 수 있습니다.

External Driver Communication

The Product has four external 24 V dc powered drivers. These drivers support several optional accessories and can support the modulated driving of solenoids for customized solutions. The driver status can be set with the display and remote interfaces.

Each driver is a modulated low-side switched 24 V dc component. Each Channel includes a PTC-type resettable fuse.

Maximum continuous power per channel is 10 W and total continuous power maximum for all 4 channels combined is 24 W. See Figure 11.

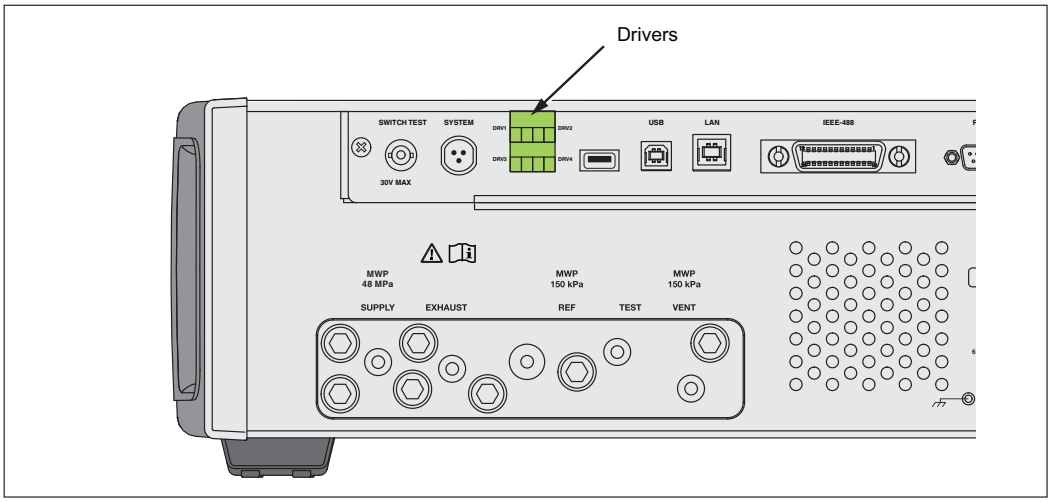

ifb030.eps

Figure 11. Drivers

원문: Fluke Calibration 8270A,8370A 메뉴얼(영문) · 제조사 원문 자료입니다. 사양은 제조사 사정에 따라 변경될 수 있습니다.

Configure the Driver

Turn on the CPS, SPLT and/or valve accessories from the Instrument Setup menu (**Setup>Instrument Setup**). These accessories require the correct pneumatic connections and electrical connections. See their respective instruction sheets for more information. Touch the **External 24V** tab to see or set the state of the external drivers.

Drivers are identified in the External 24V menu and on the rear panel of the Product as DRV1, DRV2, DRV3, DRV4 (see Figure 12). Each solenoid uses two wires, one wire goes into each connector.

- DRV1 uses the two top left inputs
- DRV2 uses the two top right inputs
- DRV3 uses the two bottom left inputs
- DRV4 uses the two bottom right inputs

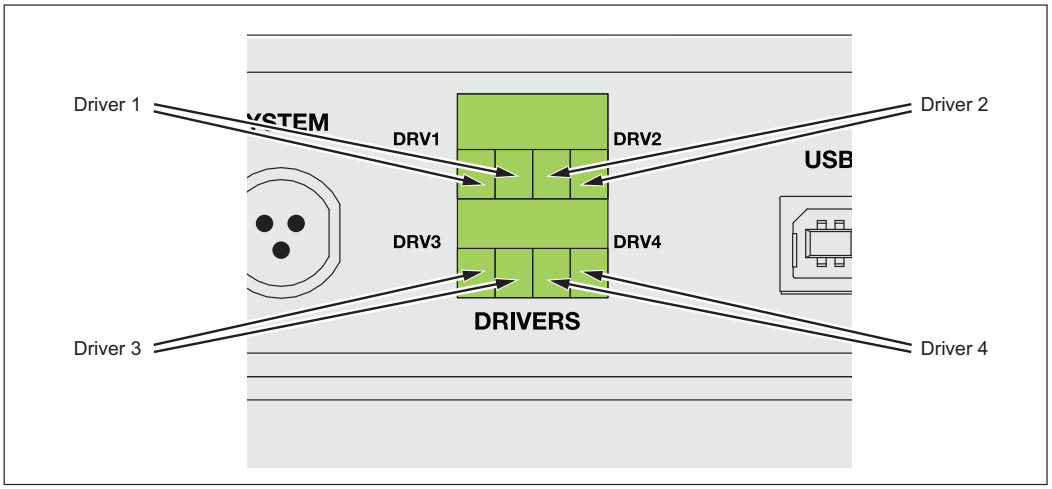

Figure 12. Driver Location

Several of the drivers support specific accessories such as the CPS, SPLT and Abort/Isolation valves for System Mode.

- DRV1: CPS Valve, or SPLT
- DRV2: CPS Valve
- DRV3: CPS LED, or External Isolation Valve
- DRV4: External Abort Valve

See the associated appendices for additional information on these accessories.

The External 24 V menu (**Setup>Instrument Setup**>**External 24V)** also shows the driver states for any auxiliary chassis when working in a system with multiple chassis.

원문: Fluke Calibration 8270A,8370A 메뉴얼(영문) · 제조사 원문 자료입니다. 사양은 제조사 사정에 따라 변경될 수 있습니다.

In these primary functions, the solenoid drive is modulated to reduce power consumption during continuous use.

Figure 13 shows the status of the drivers.

- On is designated by a light green indicator (DRV4)
- Off is designated by a dark green indicator (DRV1, DRV2, DRV3)

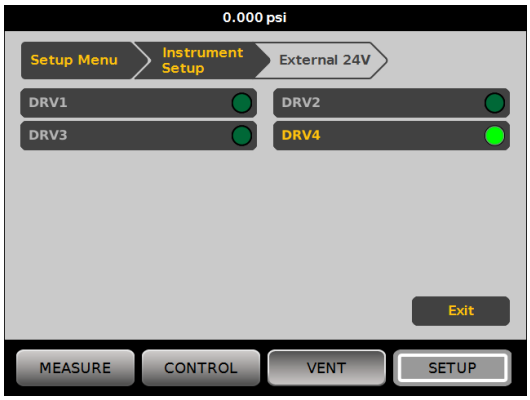

huo011.bmp

Figure 13. External 24V Screen

If drivers are dedicated to a given accessory, then DRV# will be greyed out and the status cannot be altered with the touchscreen interface.

In Figure 13, the CPS is installed so DRV1, DRV2 , DRV3 are greyed out. If the isolation valve option is installed, only DRV4 is greyed out.

원문: Fluke Calibration 8270A,8370A 메뉴얼(영문) · 제조사 원문 자료입니다. 사양은 제조사 사정에 따라 변경될 수 있습니다.

Driver Electrical Connections

The CPS uses DRV1, DRV2, and DRV3 on the Product. For more information about the CPS, see *Contamination Prevention System (CPS).* For typical connections, see Figure 14.

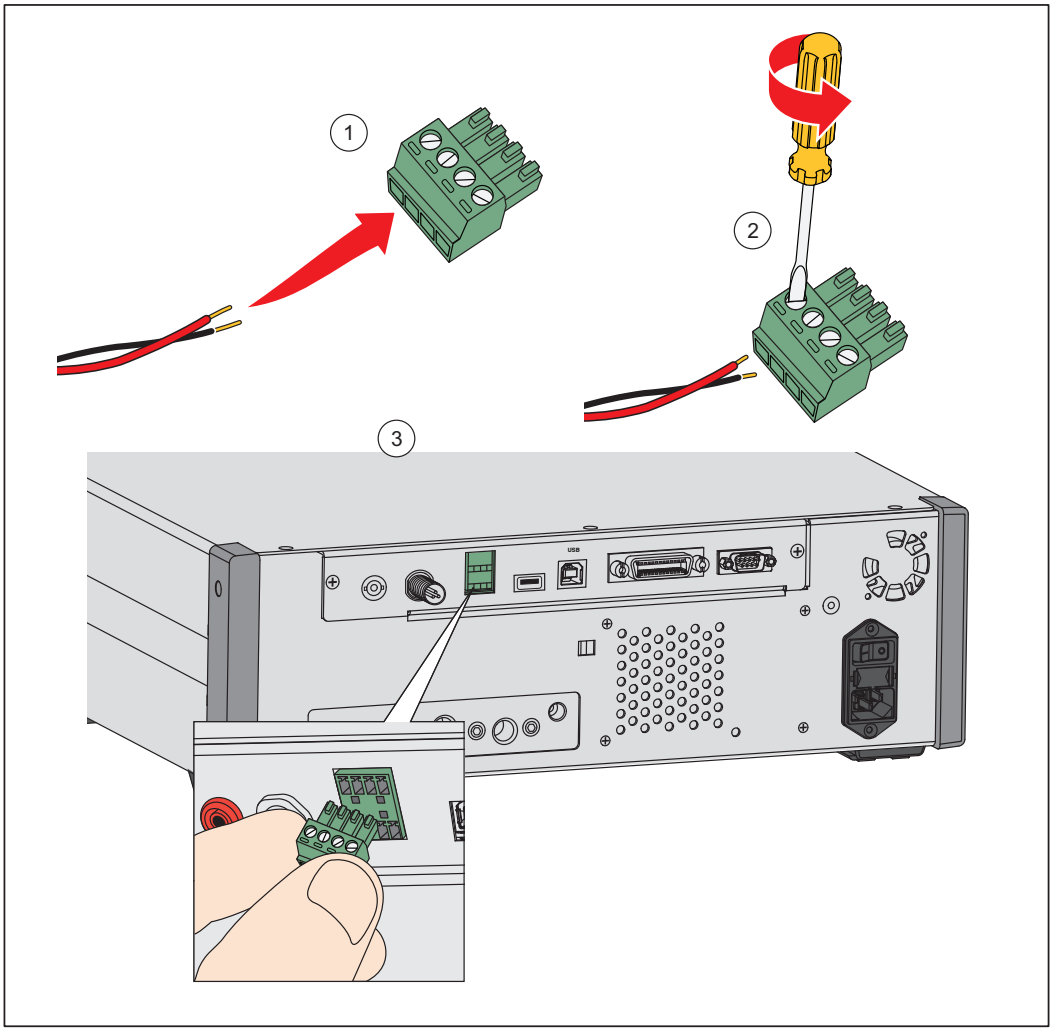

ifb033.eps

Figure 14. Driver Connections

External Abort and Isolation Valves

External abort and isolation valve accessories are available. See the separate instruction sheet for details. The valves can be used for multiple applications including supply pressure isolation or when configuring multiple controllers in one system (System Mode).

System Mode

To expand the ranging capability of the Product, connect the Product to one or two other pressure controllers that support the system stacking feature. Any combination of 6270A, 8270A, and 8370A controllers can be used when configuring a system. This could potentially make a single system with up to 15 pressure ranges. When connected, the Primary system remotely operates the Auxiliary systems.

See the System Mode Application Note online for detailed information and instructions on System Mode.

If you have a controller that will not boot to its normal screen, it is probably stuck in Aux mode. To take a chassis out of Aux mode:

1. Turn all chassis off.
2. Disconnect the CANbus cables.
3. Turn chassis on.
4. Wait 5 minutes and the AUX chassis changes to a Primary chassis.

Maintenance

This section explains routine operator maintenance necessary to keep the Product in optimal condition. For intensive maintenance tasks, such as troubleshooting or repair, see the *8270A/8370A Service Manual* available on the Fluke Calibration website The Service Manual also contains the calibration adjustment procedures. See *Contact Fluke Calibration* for more information.

Fuse Replacement

Access the fuse from the rear panel. The fuse rating label below the fuse holder shows the correct replacement fuse ratings for each operating voltage.

⚠⚠Warning

To prevent possible electrical shock, fire, or personal injury:

- **Turn the Product off and remove the mains power cord. Stop for two minutes to let the power assemblies discharge before you open the fuse door.**
- **Use only specified replacement fuses, see Table 18.**

To replace the fuse, refer to Figure 15:

1. Disconnect the mains power cord.
2. With a standard screwdriver, release the fuse holder door.
3. Pull out the fuse holder.
4. If necessary, replace the fuse.
5. Reinsert the fuse holder.
6. Close the fuse holder door.

원문: Fluke Calibration 8270A,8370A 메뉴얼(영문) · 제조사 원문 자료입니다. 사양은 제조사 사정에 따라 변경될 수 있습니다.

TS-TL-FLK-073

we measure, we calibrate, we validate.
㈜테솔 · www.tessol.com TS-TL-FLK-073 58 / 68
KOLAS 국제공인교정기관 · ISO/IEC 17025

Table 18. Replacement Fuses

Fuse Description	Fluke Part Number
⚠ FUSE 2A 250V LONGSB 5X20MM	1297149

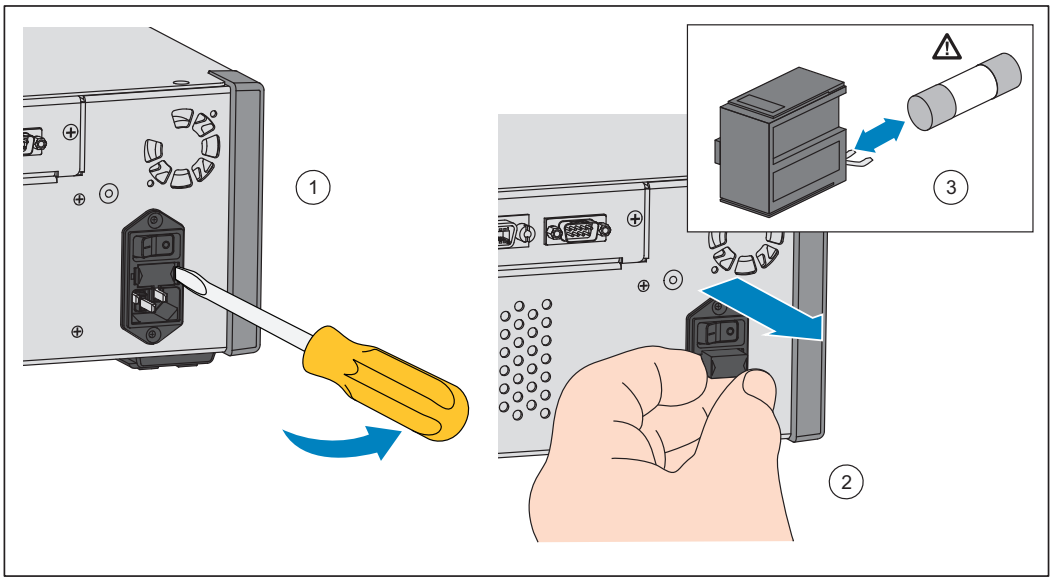

huo027.eps

Figure 15. Access the Fuse

Clean the Exterior

To clean the Product, wipe it with a cloth that is lightly dampened with water or mild detergent. Do not use aromatic hydrocarbons, chlorinated solvents, or methanol-based fluids. To clean the display, use a soft cloth lightly dampened with alcohol.

⚠Caution

Do not use aromatic hydrocarbons or chlorinated solvents for cleaning. They can damage the plastic materials used in the Product.

Reset Controller Settings

Some of the Setup menus have a reset button that reset the settings on the current menu to the default values. Reset only resets the settings on the screen being viewed and no others. This is a helpful troubleshooting tool in case an accidental change was made to the values.

A factory reset function is available in the Instrument Setup Menu that when pushed, resets the Product to its original factory settings.

Diagnostics

The Diagnostics menu provides helpful system information, tools, and functions to help troubleshoot and keep the system in good working operation.

Note

If the Product is configured as a system, the Diagnostics menu shows all of the controllers connected to it in the Diagnostics menu.

The Diagnostics menu is broken into these sections which are explained in the next sections:

- System
- Measure
- Control
- Remote Interface

System

The System Diagnostics menu provides information on these system components:

Door Switch – This is a mechanical-electrical switch located near the front panel that senses when the front panel is open. When open, the system is vented and the module information screen is shown. When closed, the system operates normally. If the status is “Open” when the door is closed, the switch could be malfunctioning or need adjustment.

Test Port Vent Valve and **Ref Port Vent Valve** – These are normally-closed isolation valves installed on the internal pressure manifold. When the system is in the Vent mode, these valves should be open. In other modes, such as Control and Measure, the valves should be Closed. If the status is different than that described, the valve may be malfunctioning.

Ref Port Vent Valve – This is a normally-closed isolation valve installed on the internal pressure manifold. When in the Gauge measurement mode, the valve is closed. When in Absolute or Tare, the valve is open. If the status is different than that described, the valve may be malfunctioning.

원문: Fluke Calibration 8270A,8370A 메뉴얼(영문) · 제조사 원문 자료입니다. 사양은 제조사 사정에 따라 변경될 수 있습니다.

Measure

The Measure diagnostics menu provides information on each PMM connected:

PMM – This is the PMM range and name.

Pressure – This is the pressure measured by the sensor in the PMM.

Temperature – This is the ambient temperature inside the PMM. The temperature inside the PMM can be as much as 5 °C higher than room temperature during normal operation.

Test Valve and Ref Valve – This is a normally-closed isolation valve installed on the internal pressure manifold in front of each PMM. The test valve isolates pressure to the PMM and is controlled by the internal software. When a PMM is selected in the Module Selection menu, the test valve should be open. For manual testing and troubleshooting, select a single PMM and test the valve. In other modes such as Fast and Auto, the Product opens and closes the valves based on a control algorithm. If the status is different than that described, the valve may be malfunctioning. See the Service Manual for replacement instructions.

The menu also has a Pneumatic Self Test function located at the bottom of the menu that automatically tests each PMM to see if the valves are opening and closing properly. The system controls pressure as necessary and monitors the valve states. If a valve is not functioning properly, an error with information is shown that indicates which valve is malfunctioning. Slots with modules installed will be included in the self test. To test all slots, it may be necessary to move modules and run the test again. No errors show if the test passes.

Control

The Control Diagnostics menu provides information about the PCM:

Readings – This menu shows the pressure measurement at the test port, supply port, and exhaust port.

Control Module – This menu shows the PCM model number, serial number, and firmware revision.

Control Coefficients – This menu shows the control coefficients (C0) the PCM is using. The Controller continuously tunes itself during normal control. There is no user Autotune function.

Tune Reset – For each setpoint, the controller measures when the control valves open and how quickly the valves change pressure. Operation during adverse conditions, for example, with no supply pressure or with the test volume open to atmosphere, may cause invalid values to be stored. Tune reset reverts these values to factory conditions. After a tune-reset is performed, control may exhibit more overshoot or longer set times for the first few setpoints.

Remote Interface

The Remote Interface Diagnostics menu provides information on remote communication by monitoring the input and output communication. The menu contains independent diagnostics for RS-232, USB, Ethernet, GPIB, and the System Bus communications.

RS-232 – Shows the Receive and Transmit data for this interface.

USB – Shows the Receive and Transmit data for this interface.

Ethernet – Shows the Receive and Transmit data for this interface.

GPIB – Shows the Receive and Transmit data for this interface.

System Bus – Shows the subsequent data for this interface.

- Receive
- Transmit
- Fault

Troubleshooting

Table 19 explains minor troubleshooting issues. For issues outside of the scope of this section, the Product may require service. See *How to Contact Fluke Calibration.*

Table 19. Troubleshooting

Problem	Probable Cause	Action
Electrical Problems		
Product does not turn on	Not plugged in	Verify Product is plugged in and power is available.
	Power not available	Check the fuse per instruction in this manual.
	Fuse blown	Verify the main power switch is ON.
		Check the fan. If the fan is on or solenoid click is heard, see the “Display does not turn on” problem.
		If the fan is not on, have the power supply serviced. Verify internal power connections.
Display does not turn on	Chassis power issue	Verify that power is supplied, see above.
	Screen saver is activated	Verify power to front panel. ABORT and ⏻ should be lit.
	Power plug to front panel is loose	Verify the ⏻ is in the ON state.
	Display panel failure	If ⏻ is yellow, then push it to turn on display.
		Open front panel and verify the power plug is connected to the front panel.
	PCM not initializing	Remove PCM and attempt to reboot.

원문: Fluke Calibration 8270A,8370A 메뉴얼(영문) · 제조사 원문 자료입니다. 사양은 제조사 사정에 따라 변경될 수 있습니다.

Table 19. Troubleshooting (cont.)

Problem	Probable Cause	Action
Electrical Problems		
Display is on with graphics but no numbers	USB interface to front panel is disconnected	Open the front panel door, check the USB cable connection to the front panel.
		Reinstall the USB cable connection.
Rear panel drivers not operating	Loose connection	Inspect the connection.
	Exceeded maximum power rating	Allow internal fuse to cool and retry. Verify the rating of the external solenoids.
		Limit current of external solenoids.
Pressure Generation or Indication Problems		
Product will not enter control mode	Modules not installed (PCM and 1+ modules)	Verify modules are properly installed. Door must be closed and properly sensed as closed. Confirm door status and pressure supply to PCM.
	PMMs not fully installed	Follow steps outlined in *Installation and Setup* to ensure that all modules are properly installed.
	No pressure supply	Apply proper supply pressure.
	Door not closed	Make sure the front panel is closed.
	Internal door-close sensor failed	Check the sensor. Send the Product to Fluke Calibration for repair.
	System in remote operation mode	Check that the controller is not connected to a computer that is sending commands to the controller.
No pressure measurement is shown. Module selection mode shows PCM (instead of Auto, Fast or Fixed)	Door not closed	Verify front panel is closed, verify the USB connection to front panel is proper, verify Product is installed.
	PMM not installed	Install a PMM (see *Installation and Setup).*
	PCM not installed	Install a PCM (see *Installation and Setup).*

원문: Fluke Calibration 8270A,8370A 메뉴얼(영문) · 제조사 원문 자료입니다. 사양은 제조사 사정에 따라 변경될 수 있습니다.

Table 19. Troubleshooting (cont.)

Problem	Probable Cause	Action
Pressure Generation or Indication Problems		
Product does not reach target pressure	Pressure supply too low	Verify pressure supply, perform leak check.
	Leak	Verify Test port is leak tight.
	Valves require service	Send the Product to Fluke Calibration for repair.
	Target pressure set higher than the highest ranged PMM	Install a PMM with the appropriate range.
	Slew Rate set to zero	Increase slew rate.
While using measure mode, pressure is leaking	No supply pressure	Provide supply pressure if not connected.
Product does not control down	Blocked exhaust port	Remove shipping plugs or excessive restriction.
	Setpoint applied below atmosphere	Connect vacuum pump.
	Slew Rate set to zero	Increase slew rate.
No remote communications	Communication settings are not correct	See *Remote Port Menu*.
	Improper command syntax	Verify cable type (null modem).
	Cables are the wrong type or not properly connected	Use the correct cables and connections.

원문: Fluke Calibration 8270A,8370A 메뉴얼(영문) · 제조사 원문 자료입니다. 사양은 제조사 사정에 따라 변경될 수 있습니다.

Error Codes

If an error occurs during Product operation or control, an error message is shown on the display. Errors can be caused by:

- Incorrect control that uses the front panel, (for example, attempts to force a prohibited mode or overloading of output terminals)
- Product fault.

These messages are shown in Table 20. All error messages are shown in a frame that overlaps the main screen. Alternately, error messages can be read and cleared over the remote interface using the SYST:ERR? command. If the error is slot or sensor specific, an additional number may be appended to the reply.

Table 20. Error Codes

Error Number	Error Message
0	No Error
103	Invalid Separator
104	Data Type
109	Missing Parameter
110	Command Header
113	Command Unknown
114	Header Suffix
201	Remote Required
221	Settings Conflict
222	Out of Range, Setpoint is above or below the Safety Limits of the controller, or the Range of the active module.
281	Cannot create program
282	Illegal Program Name
284	Program Currently Running
285	Program Syntax Error
286	Program Runtime Error
313	Calibration Data Lost
315	Configuration Data Lost
330	Self-Test Failed
350	Queue Overflow
400	Query Error
500	Controller Malfunction
501	High Limit Exceeded, Pressure is above Safety Upper Limit
502	Low Limit Exceeded, Pressure is below Safety Lower Limit
503	Slew Limit Exceeded

원문: Fluke Calibration 8270A,8370A 메뉴얼(영문) · 제조사 원문 자료입니다. 사양은 제조사 사정에 따라 변경될 수 있습니다.

Table 20. Error Codes (cont.)

Error Number	Error Message
521	Pressure Overrange, Read the error using the remote interface SYSTEM:ERROR? command and it may have the offending slot number appended to it.
533	Case Pressure Overrange
538	Automatic Vent
543	Supply Pressure Low
545	Sensor Communication
546	Sensor Calibration Lost
550	Zero Aborted
600	Factory Data Lost
601	Calibration Mode Required
603	Waiting for Calibration
707	Pressure Too High
800	Solenoid Over-Temperature
802	Control Sensor Out of Range
803	Controller Communication
804	AutoTune Failed

원문: Fluke Calibration 8270A,8370A 메뉴얼(영문) · 제조사 원문 자료입니다. 사양은 제조사 사정에 따라 변경될 수 있습니다.

User-Replaceable Parts and Accessories

Table 21 lists the part numbers of each user-replaceable part or accessory for the Product. Product installation, training, and Gold and Silver Care Plans are also available. For more information on these items and accessories, see *Contact Fluke Calibration*.

Table 21. User-Replaceable Parts and Accessories

Description		Fluke Part Number	Total Quantity
Mains Power Cord - North American		284174	1
Mains Power Cord - Europe		769422	1
Mains Power Cord - UK		769455	1
Mains Power Cord - Swiss		769448	1
Mains Power Cord - Australia		658641	1
Mains Power Cord - South Africa		782771	1
Mains Power Cord - Thailand		4362094	1
Mains Power Cord - Denmark		2477031	1
Mains Power Cord - Brazil		3841347	1
8270A/8370A Safety Information		4938183	1
Y6270 Rack-mount Kit Instruction Sheet		4456631	1
PCM installation Tool:	6 mm hex bit	5010562	1
	Handle	5013218	1
PCM Module STD-40M; Pressure Control Module, Standard Turndown		4973867	1
PCM Module STD-100M; Pressure Control Module, Standard Turndown		4913117	1
⚠ FUSE 2A 250V LONGSB 5X20MM		1297149	1
7372-2017 NPT Manifold (8270A)		4562918	1
7372-2130 BSP Manifold (8270A)		4888420	1
7372-2131 7/16 20 SAE Manifold (8270A)		4888435	1
7372-2006 DH500 Manifold (8370A)		4562809	1
5700A-2043-01,BOTTOM FOOT, MOLDED, GRAY #7		868786	4
SK-8270-SERVICE, SEALS KIT, 8270 SERVIC		4854942	1
SK-8370-SERVICE, SEALS KIT, 8370 SERVICE		4854974	1
WT-630564, TILT STAND		2650711	1
Handle		3468883	2
Bolts for rear-panel manifold		4560793	4
CABLE,ADAPTER,USB STANDARD A TO RS232 DB-9 FEMALE,1.65M LENGTH,W/USB DRIVER CD (Null Modem)		3525836	1

원문: Fluke Calibration 8270A,8370A 메뉴얼(영문) · 제조사 원문 자료입니다. 사양은 제조사 사정에 따라 변경될 수 있습니다.

Table 21. User-Replaceable Parts and Accessories (cont.)

Description	Fluke Part Number	Total Quantity
Y6270 RACK MOUNT KIT, 19 IN WIDTH, 3U	Contact Fluke Calibration	1
CASE-6270, SHIPPING CASE, 6270A		1
CASE-PMM Shipping Case, 3 PMM Modules		1
PK-8270-NPT Lines and Fittings Kit, 8270A NPT		1
PK-8270-BSP Lines and Fittings Kit, 8270A BSP		1
PK-8270-7/16 Lines and Fittings Kit, 8270A 7/16-20		1
PK-8370-100M Lines and Fittings Kit, 8370A		1
PMM-CAL-KIT-40M Pressure Measurement Module Calibration Kit, 44 MPa (6400 psi)		1
PMM-CAL-KIT-100M Pressure Measurement Module Calibration Kit, 110 MPa (16 000 psi)		1
CPS-40M-HC40 Contamination Prevention System 44 MPa (6400 psi)		1
CPS-100M Contamination Prevention System 110 MPa (16 000 psi)		1
TST-40M-HC40 Test Station, 44 MPa (6400 psi)		1
TST-100M Test Station, 110 MPa (16 000 psi)		1
VA-PPC/MPC-REF-110 Vacuum Pump Package,110 V		1
VA-PPC/MPC-REF-220,VACUUM PUMP PACKAGE,220 V		1
SPLT-40M Self-Purging Liquid Trap 44 MPa (6400 psi)		1
PK-VLV-Abort-100M High-pressure Abort Valve 110 MPa (16 000 psi)		1
COMPASS-P-BAS-SNGL COMPASS Software, Pressure Calibration Software – Basic, Single User		1
COMPASS-P-ENH-SNGL COMPASS Software, Pressure Calibration Software – Enhanced, Single User		1
COMPASS-P-BAS-L COMPASS for Pressure, Additional User License, Basic		1
COMPASS-P-ENH-L COMPASS for Pressure, Additional User License, Enhanced		1
PK-VLV-ISO-100M High-Pressure Isolation Valve 110 MPa (16 000 psi)		1
PK-LV-ISO-40M, Isolation Valve 44 MPa (6400 psi)		1
6270-SYS-CBL, 6270 System Cable Kit		1
GBK-50M,GAS BOOSTER KIT, 75:1, 61 MPa (8850 psi)		1
GBK-110M,GAS BOOSTER KIT, 152:1, 124 MPa (18 000 psi)		1
KIT-EMM300, Electrical Measurement Module Kit with Docking Station		1
PK-PMM-ZERO, Interconnection Kit for PMM Absolute Zeroing		1

원문: Fluke Calibration 8270A,8370A 메뉴얼(영문) · 제조사 원문 자료입니다. 사양은 제조사 사정에 따라 변경될 수 있습니다.