PG7000™ Piston Gauges
PG7102™, PG7202™, PG7302™, PG7601™
(Ver. 3.0 and Higher)
Operation and Maintenance Manual

© 2011 Fluke Calibration

원문: Fluke Calibration PG7302 메뉴얼(영문) · 제조사 원문 자료입니다. 사양은 제조사 사정에 따라 변경될 수 있습니다.

⚠ Warning

High pressure liquids and gases are potentially hazardous. Energy stored in these liquids and gases can be released unexpectedly and with extreme force. High pressure systems should be assembled and operated only by personnel who have been instructed in proper safety practices.

© 2011 **Fluke Calibration** All rights reserved.

Information in this document is subject to change without notice. No part of this document may be reproduced or transmitted in any form or by any means, electronic or mechanical, for any purpose, without the express written permission of **Fluke Calibration, 4765** East Beautiful Lane, Phoenix, Arizona 85044-5318 USA.

Fluke Calibration makes sincere efforts to ensure the accuracy and quality of its published materials; however, no warranty, expressed or implied, is provided. **Fluke Calibration** disclaims any responsibility or liability for any direct or indirect damages resulting from the use of the information in this manual or products described in it. Mention of any product or brand does not constitute an endorsement by **Fluke Calibration** of that product or brand. This manual was originally composed in English and was subsequently translated into other languages. The fidelity of the translation cannot be guaranteed. In case of conflict between the English version and other language versions, the English version predominates.

Products described in this manual are manufactured under international patents and one or more of the following U.S. patents: 6,701,791, 5,142,483, 5,257,640, 5,331,838, 5,445,035. Other U.S. and international patents pending.

Fluke Calibration, **FCAL, DH**, **DHI**, PG7000, PG7102, PG7202, PG7302, PG7601, COMPASS, CalTool are trademarks, registered and otherwise, of **Fluke Corporation.**

LabVIEW is registered trademark of National Instruments Corporation.
Swagelok is a registered trademark of the Swagelok Company.

Document No. 3152117
110325
Printed in the USA

원문: Fluke Calibration PG7302 메뉴얼(영문) · 제조사 원문 자료입니다. 사양은 제조사 사정에 따라 변경될 수 있습니다.

Table of Contents

Table of Contents III

Tables VII

Figures VIII

About This Manual IX

1. Introduction 1

1.1 Product Overview 1

1.2 Specifications 2

1.2.1 General Specifications 2

1.2.1.1 Embedded Features 3

1.2.1.2 Ambient and Instrument Condition Measurements 4

1.2.2 Piston-Cylinder Modules 5

1.2.2.1 PC-7100/7600 5

1.2.2.2 PC-7200 6

1.2.2.3 PC-7300 7

1.2.3 Mass Sets 7

1.2.4 Pressure Measurements 8

1.2.4.1 PC-7100/7600 8

1.2.4.2 PC-7200 9

1.2.4.3 PC-7300 9

1.3 Terminal and Platform Front and Rear Panels 10

1.3.1 Terminal Front and Rear Panels 10

1.3.1.1 PG Terminal Front Panel 10

1.3.1.2 PG terminal Rear Panel 11

1.3.2 Platform Rear Panels 11

2. Installation 13

2.1 Unpacking And Inspection 13

2.1.1 Removing from Packaging 13

2.1.1.1 Platform 13

2.1.1.2 Mass Set 13

2.1.1.3 Piston-Cylinder Module(s) 14

2.1.1.4 Automated Mass Handler 14

2.1.2 Inspecting Contents 14

2.1.2.1 Platform 14

2.1.2.2 Mass Set 19

2.1.2.3 Piston-Cylinder Module(s) 21

2.2 Site Requirements 22

2.3 Setup 23

2.3.1 Preparing for Operation 23

2.3.1.1 Setting Up the Platform 23

2.3.1.2 System Pressure Interconnections 24

2.3.1.3 Setting Up a Mass Set 24

2.3.2 installing a Piston-Cylinder Module into the Platform 25

2.3.3 Switching a PG7202 Between Gas Operation and Oil Operation 26

© 2011 Fluke Calibration

원문: Fluke Calibration PG7302 메뉴얼(영문) · 제조사 원문 자료입니다. 사양은 제조사 사정에 따라 변경될 수 있습니다.

2.4 Power Up and Verification 28
2.4.1 Power UP 28
2.4.2 Check that On-Board Piston-Cylinder Module and Mass Set Information are Correct 28
2.4.3 Set Local Gravity Value 28
2.4.4 Setup Pressure Equation Variable Input Sources 28
2.4.5 Check Proper Operation of Ambient Condition Measurements 29
2.4.6 apply pressure to THE piston-cylinder module 29
2.4.7 Check Proper Behavior of Motorized Piston Rotation 30
2.4.8 Check Proper Operation of Piston Behavior Measurements 30
2.4.8.1 Verify Vacuum Reference (PG7601 Only) 30
2.4.9 Check Automated Pressure Generation (If Present) 31
2.4.10 Check/Set Security Level 31
2.4.11 Additional Precautions to Take Before Making Pressure Measurements 31
2.5 Short Term Storage 32

3. General Operation 33

3.1 Fundamental Operating Principles 33
3.1.1 Gas Operated, Liquid Lubricated Piston-Cylinder Operating Principle (PG7202) 34
3.2 Keypad Layout And Protocol 35
3.3 Sounds 36
3.4 Pressure *Ready/Not Ready* Indication 36
3.4.1 Piston Position *Ready/*Not *Ready* 36
3.4.2 Piston Rotation *Ready/Not Ready* 37
3.4.3 Vacuum Reference *Ready/Not Ready* (PG7601 Only) 38
3.5 Piston Position 38
3.6 Mass Loading Protocol 39
3.7 Main Run Screen 42
3.8 General Function/Menu Flow Chart 43
3.9 Direct Function Keys 44
3.9.1 Direct Function Keys Summary 44
3.9.2 [P-C] 45
3.9.3 [UNIT] 46
3.9.3.1 Customizing Pressure Units Available Under the UNIT Function 47
3.9.4 [MODE] 48
3.9.4.1 Differential Measurement Mode (PG7601 Only) 49
3.9.4.2 HIGH LINE Differential measurement mode (PG7102, PG7302 and PG7202 ONLY) 56
3.9.5 [SYSTEM] 68
3.9.5.1 First System Run Screen 68
3.9.5.2 Second System Run Screen 69
3.9.6 [AMBIENT] 70
3.9.7 [HEAD] 71
3.9.8 [ROTATE] 73
3.9.8.1 <2PRE-DECEL> 74
3.9.9 [GEN] (OPTIONAL) 75
3.9.9.1 <2target> 76
3.9.9.2 <3raise> 77
3.9.9.3 <4UL> 77
3.9.9.4 <5tol> 77
3.9.9.5 <6refloat> 78
3.9.9.6 <7Vol> 78
3.9.10 [RES] 79
3.9.11 [ENTER/SET P] from Run Screen 80
3.9.11.1 [ENTER/SET P] in Pressure to Mass Mode 81
3.9.11.2 [ENTER/SET P] in Mass to Pressure Mode 83
3.9.11.3 Commands for Zero Pressure, Ending a Test 83
3.9.12 [P OR M] 84
3.9.13 [↻] and [↻], [←] 84
3.10 [SETUP] Menu 86
3.10.1 <1select> 87
3.10.2 <2view> 88
3.10.3 <3edit> 89

원문: Fluke Calibration PG7302 메뉴얼(영문) · 제조사 원문 자료입니다. 사양은 제조사 사정에 따라 변경될 수 있습니다.

TESSOL Technical Library

TS-TL-FLK-093

we measure, we calibrate, we validate.
㈜테솔 · www.tessol.com TS-TL-FLK-093 4 / 214
KOLAS 국제공인교정기관 · ISO/IEC 17025

TABLE OF CONTENTS

3.11 [SPECIAL] Menu 91
3.11.1 <1PC/MS> 92
3.11.1.1 Create Piston-Cylinder Module 93
3.11.1.2 Edit Piston-Cylinder Module 95
3.11.1.3 View Piston-Cylinder Module 95
3.11.1.4 Delete Piston-Cylinder Module 96
3.11.1.5 Select the active piston-cylinder module 96
3.11.1.6 Add Mass Set 97
3.11.1.7 Edit mass set 101
3.11.1.8 View Mass Set 101
3.11.1.9 Delete Mass Set 101
3.11.1.10 Select Mass Set 102
3.11.1.11 Add Mass Loading Bell 102
3.11.1.12 Edit Mass Loading Bell 104
3.11.1.13 View mass loading bell 104
3.11.1.14 delete mass loading bell 104
3.11.1.15 Select Mass Loading Bell 105
3.11.2 <2presu> 105
3.11.3 <3HEAD> 105
3.11.3.1 <3head>, <1fluid> 106
3.11.3.2 <3head>, <2unit> 106
3.11.3.3 <3head>, <3atm> 107
3.11.3.4 <3head>, <4piston> 107
3.11.4 <4Prefs> 108
3.11.4.1 <4PREFS>, <1ScrSVR> 108
3.11.4.2 <4PREFS>, <2Sound> 108
3.11.4.3 <4PREFS>, <3Time> 109
3.11.4.4 <4PREFS>, <4ID> 109
3.11.4.5 <4prefs>, <5level> 110
3.11.5 <5remote> 113
3.11.5.1 COM1, COM2 AND COM3 (RS232) 113
3.11.5.2 IEEE-488 113
3.11.5.3 RS232 Self Test 114
3.11.5.4 External Barometer (RPM) Communications (COM2) 114
3.11.5.5 External Vacuum Gauge Communications (COM2) (PG7601 Only) 116
3.11.6 <6GL> 118
3.11.7 <7cal> 119
3.11.8 <8AMH> 119
3.11.8.1 <2control>, <1up/down> 120
3.11.8.2 <2control>, <2discreet> 120
3.11.8.3 <2control>, <3loadall> 120
3.11.8.4 <2control>, <4unloadall> 121
3.11.9 <9reset> 121
3.11.9.1 <9reset>, <1sets> 121
3.11.9.2 <9reset>, <2units> 122
3.11.9.3 <9reset>, <3com> 122
3.11.9.4 <9reset>, <4cal> 122
3.11.9.5 <9RESET>, <5SETUPS> 123
3.11.9.6 <9reset>, <6all> 123

4. Remote Operation 125

4.1 Overview 125
4.2 Interfacing 125
4.2.1 RS232 Interface 125
4.2.1.1 COM1 125
4.2.1.2 COM2 AND COM3 126
4.2.2 IEEE-488 (GPIB) 126
4.3 Commands 127
4.3.1 Command Syntax 127
4.3.2 COMMAND summary 127
4.3.3 Error Messages 129
4.3.3.1 AMH errors 130
4.3.4 Command Descriptions 130
4.3.4.1 IEEE Std. 488.2 Common and Status Commands 130
4.3.4.2 PG7000 commands 133
4.4 Status System 160
4.4.1 Status Reporting System 160
4.4.1.1 Status Byte Register 160
4.4.1.2 Standard Event Register 161

© 2011 Fluke Calibration

원문: Fluke Calibration PG7302 메뉴얼(영문) · 제조사 원문 자료입니다. 사양은 제조사 사정에 따라 변경될 수 있습니다.

4.5 High Line Differential Mode Programming Examples 162
4.5.1 Recommended sequence for a host program to remotely set a new high line pressure and enable high line differential mode 162
4.5.2 Recommended Sequence for a Host Program to Remotely Enable High Line Differential Mode using the Last Line Pressure Setting 164

5. Maintenance, Adjustments and Calibration 165

5.1 Introduction 165
5.2 Platform 166
5.2.1 Calibration/Adjustment of On-Board Measurement Functions 166
5.2.1.1 Principles 166
5.2.1.2 Barometric Pressure Sensor 166
5.2.1.3 AMBIENT TEMPERATURE sensor 167
5.2.1.4 Relative Humidity sensor 168
5.2.1.5 piston-cylinder module temperature sensor 168
5.2.1.6 Reference Vacuum Gauge (PG7601 Only) 170
5.2.2 Piston Position Detection Adjustment 170
5.2.3 Emptying Oil Run-Off Tray (PG7202 and PG7302 Only) 171
5.2.4 Purge Mounting Post Liquid Run Off (PG7202 Only) 172
5.2.5 Drive Belt Replacement 172
5.3 Piston-Cylinder Modules 173
5.3.1 Disassembly, Cleaning and Maintenance 173
5.3.2 Disassembly and Reassembly 174
5.3.2.1 Disassembly and Reassembly of gas operated, gas lubricated piston-cylinder modules (PC-7100/7600) 174
5.3.2.2 Disassembly And Reassembly of Gas Operated, Liquid Lubricated Piston-Cylinder Modules (PC-7200) 178
5.3.2.3 Disassembly and Reassembly of Oil Operated, Oil Lubricated Piston-Cylinder Modules (PC-7300) 180
5.3.3 Filling or Emptying Gas Operated, Liquid Lubricated Piston-Cylinder Module Reservoir with Liquid 182
5.3.4 Cleaning Piston-Cylinders 183
5.3.5 Lubricating Piston-Cylinder Modules 185
5.3.6 Recalibration 188
5.3.6.1 updating piston-cylinder module files 188
5.4 Mass Sets 189
5.4.1 Cleaning 189
5.4.2 Recalibration 189
5.4.2.1 Updating Mass Set Files 189
5.5 Reloading Embedded Software into PG7000 Flash Memory 189
5.6 Disassembly and Reassembly of PG7000 190
5.6.1 Platform 190
5.6.2 Terminal 190
5.6.3 AMH Automated Mass Handler Removal 190

6. Troubleshooting 191

6.1 Overview 191

7. Appendix 195

7.1 Conversion of Numerical Values 195
7.1.1 Pressure 195
7.2 Defined Pressure Calculations 195
7.2.1 PG7102, PG7202 and PG7302 197
7.2.2 PG7601 198
7.2.3 Fluid Heads 199
7.2.3.1 Fluid Head Components 199
7.2.3.2 Overall Fluid Head Correction 200
7.3 Glossary 201
7.4 Limited Warranty and Limitation of Liability 203

원문: Fluke Calibration PG7302 메뉴얼(영문) · 제조사 원문 자료입니다. 사양은 제조사 사정에 따라 변경될 수 있습니다.

TESSOL Technical Library

TS-TL-FLK-093

we measure, we calibrate, we validate.
㈜테솔 · www.tessol.com TS-TL-FLK-093 6 / 214
KOLAS 국제공인교정기관 · ISO/IEC 17025

Tables

Table 1. PG7102 Parts List 15
Table 2. PG7202 Parts List 16
Table 3. PG7302 Parts List 17
Table 4. PG7601 Parts List 18
Table 5. Manual Mass Set Parts List (excluding 80 and 100 kg) 19
Table 6. Manual Mass Set Parts List (80 and 100 kg) 19
Table 7. AMH-38 Mass Set Parts List 19
Table 8. AMH-100 Mass Set Parts List 19
Table 9. Mass Set Compositions 20
Table 10. Mass Set Compatibility 20
Table 11. PC-7100/7600 Piston-Cylinder Modules Parts List 21
Table 12. PC-7200 Piston-Cylinder Modules Parts List 21
Table 13. PC-7300 Piston-Cylinder Modules Parts List 22
Table 14. Summary of PG7000 Direct Function Key Operations 44
Table 15. Pressure Units of Measure Available 47
Table 16. Valve Settings for Setting Differential Mode Static Pressure 52
Table 17. Valve Settings to Apply PG7000 Pressure to the RPM for Differential Mode Offsetting 53
Table 18. Valve Settings for Operating in Differential Mode 55
Table 19. SETUP File Choices, Factory Preferred Choice and Normal Value 87
Table 20. Security Levels - Functions NOT Executed Per Function/Level 111
Table 21. COM1, COM2 and COM3 Available Settings 113
Table 22. COM1 DB-9F Pin Designation 126
Table 23. COM2 and COM3 DB-9M Pin Designation 126
Table 24. Command Summary 127
Table 25. Error Messages 129
Table 26. Status Byte Register 160
Table 27. Standard Event Register 161
Table 28. Mounting Post Wire Colors, Description and Location 170
Table 29. PG7000 Troubleshooting Checklist 191
Table 30. Pressure Unit of Measure Conversions 195
Table 31. PG7000 Defined Pressure Calculation Variables 196
Table 32. DHI Authorized Service Providers 204

© 2011 Fluke Calibration

원문: Fluke Calibration PG7302 메뉴얼(영문) · 제조사 원문 자료입니다. 사양은 제조사 사정에 따라 변경될 수 있습니다.

Figures

Figure 1. PG Terminal Front Panel 10
Figure 2. PG Terminal Rear Panel 11
Figure 3. PG Platform Rear Panel 11
Figure 4. Piston-Cylinder Module Installation 26
Figure 5. Piston Gauge Operating Principle 33
Figure 6. Gas Operated, Liquid Lubricated Piston-Cylinder (PC-7200) Operating Principle 35
Figure 7. PG7000 Keypad Layout 35
Figure 8. Piston Stroke and Zones 39
Figure 9. Run Screen Flow Chart 43
Figure 10. Differential Mode Controller Schematic 51
Figure 11. High Line Differential Mode Schematic 59
Figure 12. Status Byte Register 160
Figure 13. PG7202 Mounting Post Drain 172
Figure 14. 10 and 20 kPa/kg Gas Piston-Cylinder Module (Expanded View) 175
Figure 15. 10 kPa/kg Piston Insertion Tool 176
Figure 16. Gas Piston-Cylinder Module Sleeve Nut Tool 176
Figure 17. 50, 100 and 200 kPa/kg Gas Piston-Cylinder Modules (Expanded View) 177
Figure 18. Gas Operated, Liquid Lubricated Piston-Cylinder Module (Expanded View) 179
Figure 19. Oil Piston-Cylinder Module (Expanded View) 181
Figure 20. Filling Gas Operated, Liquid Lubricated Piston-Cylinder Module Reservoir (PC-7200) 183
Figure 21. Gas Operated, Gas Lubricated Piston-Cylinder Module Lubrication Chart 186
Figure 22. Gas Operated, Liquid Lubricated Piston-Cylinder Module Lubrication Chart 187
Figure 23. Oil Operated Piston-Cylinder Module Lubrication Chart 188

© 2011 Fluke Calibration

원문: Fluke Calibration PG7302 메뉴얼(영문) · 제조사 원문 자료입니다. 사양은 제조사 사정에 따라 변경될 수 있습니다.

About This Manual

This manual provides the user with the information necessary to operate various PG7000 Piston Gauges. It also includes a great deal of additional information provided to help you optimize PG7000 use and take full advantage of its many features and functions.

This manual covers four PG7000 models: PG7102, PG7202, PG7302 and PG7601. The four models have many features and characteristics in common as well as individual differences. When discussing features that are common to all four models, they are referred to collectively as PG7000. When providing information pertaining to a specific model, that model is referred to by its specific model number.

Before using the manual, take a moment to familiarize yourself with the Table of Contents structure. All first time PG7000 users should read Sections 1 and 2. Section 3 provides a comprehensive description of general PG7000 operating principles. Section 4 covers remote communication with an external computer. Section 5 provides maintenance and calibration information. Section 6 is a quick troubleshooting guide. Use the information in Section 6 to troubleshoot unexpected PG7000 behavior based on the symptoms of that behavior.

Certain words and expressions have specific meaning as they pertain to PG7000s. The Glossary (see Section 7) is useful as a quick reference for the definition of specific words and expressions as they are used in this manual.

Note

For those of you who "don't read manuals", go directly to section Error! Reference source not found.**, initial setup, to set up your PG7000. Then go to section 2.4, power up and verification. This will get you running quickly with minimal risk of causing damage to yourself or your PG7000. THEN… when you have questions or start to wonder about all the great features you might be missing, get into the manual!**

Manual Conventions

⚠ Caution

"Caution" is used in throughout the manual to identify conditions or actions that could cause harm to the PG7000 or to the devices that are connected to it.

⚠ Warning

"Warning" is used in throughout the manual to identify actions that could pose a hazard to the user of the PG7000.

Note

"Note" is used throughout the manual to identify operating and applications advice and additional explanations.

[ ] Indicates direct function keys (e.g., **[RANGE]**).

< > Indicates molbox1+ screen displays (e.g., **<1yes>**).

© 2011 Fluke Calibration

원문: Fluke Calibration PG7302 메뉴얼(영문) · 제조사 원문 자료입니다. 사양은 제조사 사정에 따라 변경될 수 있습니다.

Notes

원문: Fluke Calibration PG7302 메뉴얼(영문) · 제조사 원문 자료입니다. 사양은 제조사 사정에 따라 변경될 수 있습니다.

1. Introduction

1.1 Product Overview

PG7000 Piston Gauges are reference level pressure standards that operate on the piston gauge principle. Pressure is defined by balancing it against the force exerted by a known mass accelerated by gravity on the effective area of a piston-cylinder.

A PG7000 piston gauge consists of the PG7000 Platform, one or several piston-cylinder modules, a mass set. An automated mass handling system is available. A PG7000 system normally also includes the means to generate and adjust pressures and to interconnect the system components and a device being calibrated or tested. The pressure generation component can be manual or automated. COMPASS® for Pressure software may also be included to assist in executing test sequences, acquiring test data and producing test reports.

There are four PG7000 Platforms: PG7102, PG7202, PG7302 and PG7601. These have a common PG7000 presentation and features. They are distinguished by their normal operating medium (oil and/or gas) and the capability to define pressures relative to a vacuum reference.

- **PG7102**
  - Gas operated with gas lubricated piston-cylinder modules (PC-7100/7600 modules)
  - Maximum pressure is 11 MPa (1 600 psi)
  - Does not support definition of pressure against a vacuum reference
- **PG7202**
  - Gas operated, liquid lubricated piston-cylinder modules (PC-7200 modules)
  - Oil operated piston-cylinder modules (PC-7300 modules)
  - Maximum pressure is 110 MPa (16 000 psi) when operated with a PC-7200 module
  - Maximum pressure is 200 MPa (30 000 psi) when operated with a PC-7300 module
  - Does not support definition of pressure against a vacuum reference
- **PG7302**
  - Oil operated (PC-7300 modules)
  - Maximum pressure is 500 MPa (72 500 psi)
- **PG7601**
  - Gas operated, gas lubricated piston-cylinder modules (PC-7100/7600 modules)
  - Maximum pressure is 7 MPa (1 000 psi)
  - Supports definition of pressure against a vacuum reference

PG7000 platforms, piston-cylinder modules, mass sets and mass handling systems are designed to maximize metrological performance and ease of operation. They include many features that enhance the fundamental precision and stability of pressure measurements as well as simplifying use and reducing operator influence on the measurements. Extensive monitoring and controlling capability and advanced local and remote user interfaces are integrated into PG7000 Platforms.

Operator interaction with PG7000 and its extensive capabilities and peripherals is accomplished through a single display and keypad on the PG Terminal or from a computer via a single standard RS232 or IEEE-488 interface.

© 2011 Fluke Calibration

원문: Fluke Calibration PG7302 메뉴얼(영문) · 제조사 원문 자료입니다. 사양은 제조사 사정에 따라 변경될 수 있습니다.

1.2 Specifications

1.2.1 General Specifications

Power Requirements 85 to 264 VAC, 50/60 Hz, 22 VA max. consumption.

Operating Temperature Range 15 to 35 °C

Operating Humidity Range 5 to 95% R.H., non-condensing

Weight
Instrument platform with no mass loaded.

PG7102	13 kg (29 lb)
PG7202	13 kg (29 lb)
PG7302	13 kg (29 lb)
PG7601	17 kg (37 lb)
PG Terminal	1.4 kg (3 lb)

Dimensions

Instrument Platform	36 cm H x 40 cm W x 35 cm D (14.5 in. x 15.8 in. x 13.8 in.) (Height: Top of mounting post with piston-cylinder module installed for PG7102/PG7202/PG7302; top of bell jar for PG7601.)
PG Terminal	12 cm H x 15 cm W x 20 cm D (4.7 in. H x 5.9 in. W x 7.9 in. D)

Microprocessors

Instrument Platform	Motorola 68302
PG Terminal	Hitachi 64180

Communication Ports

RS232	COM1: Host computer COM2: External barometer or vacuum gauge (PG7601) and pass through communications COM3: Automated pressure generator/controller
IEEE-488	Host computer

Overall Pressure Ranges
Actual range depends on piston-cylinder and mass set selection

PG7102	Gauge:	5 kPa to 11 MPa (0.7 to 1 600 psi)
	Absolute:	105 kPa to 11 MPa (15 to 1 600 psi)
	Differential:	DP + static pressure < 11 MPa (1 600 psi)
PG7202	Gauge (gas):	100 kPa to 110 MPa (15 to 16 000 psi)
	Absolute (gas):	200 kPa to 110 MPa (30 to 16 000 psi)
	Gauge (oil):	(PG7302 module): 1 to 200 MPa (150 to 30 000 psi)
	Absolute (oil):	(PG7302 module) 1.1 to 200 MPa (165 to 30 000 psi)
	Differential:	DP + static pressure < 110 MPa (16 000 psi)
PG7302	Gauge:	20 kPa to 500 MPa (3 to 75 000 psi)
	Absolute:	120 kPa to 500 MPa (20 to 75 000 psi)
PG7601	Gauge:	4 kPa to 7 MPa (0.6 to 1 000 psi)
	Absolute:	7 kPa to 7 MPa (0.7 to 1 000 psi)
	Differential:	- 90 to 350 kPa (-13 to 50 psi) at 15 to 200 kPaa (2 to 30 psia) static pressure

Note

PC-7200 can be operated in oil up to 200 MPa (30 000 psi) when used with PC-7300 oil operated piston-cylinders.

Operating Media

PG7102	Gas: air, helium, nitrogen
PG7202	Gas: any non-corrosive Oil: Di2-EthylHexyl Sebacate (synthetic oil)
PG7302	Oil: Di2-EthylHexyl Sebacate (synthetic oil)
PG7601	Gas: air, helium, nitrogen

원문: Fluke Calibration PG7302 메뉴얼(영문) · 제조사 원문 자료입니다. 사양은 제조사 사정에 따라 변경될 수 있습니다.

we measure, we calibrate, we validate.
㈜테솔 · www.tessol.com TS-TL-FLK-093 12 / 214
KOLAS 국제공인교정기관 · ISO/IEC 17025

Maximum Mass Load

PG7102	100 kg, while not exceeding 11 MPa (1 600 psi)
PG7202	100 kg, while not exceeding 110 MPa (16 000 psi) when operated with PC-7200 piston-cylinder modules or 200 MPa (30 000 psi) when operated with PC-7300 piston-cylinder modules
PG7302	100 kg
PG7601	38 kg

Pressure Connections

PG7102	Test port:	DH200
PG7202	Test port:	DH500
	Drain port:	DH500
PG7302	Test port:	DH500
PG7601	Test port:	DH200
	Bell Jar Vent Port:	DH200

Vacuum Reference
Pump Down Port: KF25 (KF40 available on optional AMH automated mass handler)

External Vacuum Port: Optional KF25 on bell jar (KF40 available on optional AMH automated mass handler)

Note

DH200 and DH500 are gland and collar type fittings for 1/4 in. (6.35 mm) coned and left hand threaded tubes.

DH200 is equivalent to AE SF250C, HIP LF4, etc.

DH500 is equivalent to AE F250C, HIP HF4, etc.

CE Conformance Available, must be specified.

1.2.1.1 Embedded Features

- Local control with 2 x 20 vacuum fluorescent display and 4 x 4 function driven keypad.
- Real time (1 second update rate) display and measurement of ambient (pressure, temperature, humidity) and instrument (piston-cylinder temperature, piston position, piston drop rate, piston rotation rate, piston rotation decay rate, reference vacuum) conditions.
- Real time (1 second update rate) mass-to-pressure and pressure-to-mass calculations taking into consideration all environmental and operational variables.
- Full gas and liquid fluid head corrections including DUT head correction and piston position head correction.
- Adjustable mass loading resolution (0.01 g to 0.1 kg).
- Audible prompts of instrument status (piston movement, Ready/Not Ready indication) with override capability.
- Integrated automated mass handling option (AMH-38 or AMH-100).
- Interfacing and automatic exploitation of external barometer via RS232.
- Interfacing and automatic exploitation of any external vacuum gauge via RS232 (PG7601 only).
- Automated differential mode to define low differential pressures at various static pressures between vacuum and two atmospheres.
- Automated high line differential mode to define differential pressure at high line pressure.
- Storage and one step activation of metrological data on up to 18 piston-cylinder modules, (3) mass sets and (3) mass loading bells.

© 2011 Fluke Calibration

원문: Fluke Calibration PG7302 메뉴얼(영문) · 제조사 원문 자료입니다. 사양은 제조사 사정에 따라 변경될 수 있습니다.

we measure, we calibrate, we validate.
㈜테솔 · www.tessol.com TS-TL-FLK-093 13 / 214
KOLAS 국제공인교정기관 · ISO/IEC 17025

TS-TL-FLK-093

- Continuous pressure Ready/Not Ready indication based on measured conditions.
- Motorized, intelligent piston drive system based measured rotation rate with operator alert and manual override.
- Integrated automated pressure control with standard Fluke Calibration pressure controllers.
- Full RS232 and IEEE-488 communications with multi-level commands to set and read all instrument functions.

1.2.1.2 Ambient and Instrument Condition Measurements

Temperature	Ambient	Piston Cylinder Module
Range	0 to 40 °C	0 to 40 °C
Resolution	0.1	0.01
Measurement Uncertainty	± 1	± 0.1

Barometric Pressure with Internal Sensor	
Range	70 to 110 kPa
Resolution	10 Pa
Measurement Uncertainty	± 140 Pa
	Barometric pressure can also be read automatically with any RS232 device such as a **FCAL** RPM.

Relative Humidity	
Range	5 to 95 % RH
Resolution	1 % RH
Measurement Uncertainty	± 10 % RH

Piston Position	
Range	± 4.5 mm
Resolution	0.1 mm
Measurement Uncertainty	± 0.2 mm

Piston Rotation (Rate and deceleration)	
Range	2 to 99 rpm
Resolution	1 rpm

Vacuum (PG7601 only)	
Range	0 to 20 Pa
Resolution	0.01 Pa
Measurement Uncertainty	± 0.1 Pa or 10 % of reading, whichever is greater

원문: Fluke Calibration PG7302 메뉴얼(영문) · 제조사 원문 자료입니다. 사양은 제조사 사정에 따라 변경될 수 있습니다.

1.2.2 Piston-Cylinder Modules

All piston-cylinders are integrated modules including mounting hardware delivered in individual shipping and storage bullet cases.

1.2.2.1 PC-7100/7600

Gas operated, gas lubricated piston-cylinder characteristics. Used in PG7102 and PG7601 platforms.

PC-7100/7600-10, TC
PC-7100/7600-10-L

Operation	Gas operated, gas lubricated
Piston Material	Tungsten carbide
Cylinder Material	Tungsten carbide
Nominal Diameter	35 mm
Nominal Area	1 000 mm^2
Mounting System	Simple free deformation

PC-7100/7600-20

Operation	Gas operated, gas lubricated
Piston Material	Tungsten carbide
Cylinder Material	Tungsten carbide
Nominal Diameter	25 mm
Nominal Area	500 mm^2
Mounting System	Simple free deformation

PC-7100/7600-50

Operation	Gas operated, gas lubricated
Piston Material	Tungsten carbide
Cylinder Material	Tungsten carbide
Nominal Diameter	16 mm
Nominal Area	200 mm^2
Mounting system	Negative free deformation

PC-7100/7600-100

Operation	Gas operated, gas lubricated
Piston Material	Tungsten carbide
Cylinder Material	Tungsten carbide
Nominal Diameter	11 mm
Nominal Area	98 mm^2
Mounting System	Negative free deformation

PC-7100/7600-200

Operation	Gas operated, gas lubricated
Piston Material	Tungsten carbide
Cylinder Material	Tungsten carbide
Nominal Diameter	8 mm
Nominal Area	50 mm^2
Mounting System	Negative free deformation

© 2011 Fluke Calibration

원문: Fluke Calibration PG7302 메뉴얼(영문) · 제조사 원문 자료입니다. 사양은 제조사 사정에 따라 변경될 수 있습니다.

we measure, we calibrate, we validate.
㈜테솔 · www.tessol.com TS-TL-FLK-093 15 / 214
KOLAS 국제공인교정기관 · ISO/IEC 17025

TS-TL-FLK-093

1.2.2.2 PC-7200

Gas operated, liquid lubricated piston-cylinder module characteristics. Used in PG7202 platform.

Note

Though not recommended for day-to-day operation, PC-7200 modules can also be filled completely with oil and operated with oil as the test medium (see Section 2.3.3).

PC-7200-100

Operation	Gas operated, liquid lubricated
Lubricating Liquid	Synturion 6 (Krytox® optional)
Piston and Cylinder Material	Tungsten carbide
Nominal Diameter	11.2 mm
Nominal Area	98.1 mm^2
Mounting System	Negative free deformation

PC-7200-200

Operation	Gas operated, liquid lubricated
Lubricating Liquid	Synturion 6 (Krytox® optional)
Piston and Cylinder Material	Tungsten carbide
Nominal Diameter	7.9 mm
Nominal Area	49.0 mm^2
Mounting System	Negative free deformation

PC-7200-500

Operation	Gas operated, liquid lubricated
Lubricating Liquid	Di-2-ethylhexyl Sebacate (Krytox® optional)
Piston and Cylinder Material	Tungsten carbide
Nominal Diameter	5.0 mm
Nominal Area	19.6 mm^2
Mounting System	Negative free deformation

PC-7200-1

Operation	Gas operated, liquid lubricated
Lubricating Liquid	Di-2-ethylhexyl Sebacate (Krytox® optional)
Piston and Cylinder Material	Tungsten carbide
Nominal Diameter	3.5 mm
Nominal Area	9.8 mm^2
Mounting System	Negative free deformation

PC-7200-2

Operation	Gas operated, liquid lubricated
Lubricating Liquid	Di-2-ethylhexyl Sebacate (Krytox® optional)
Piston and Cylinder Material	Tungsten carbide
Nominal Diameter	2.5 mm
Nominal Area	4.9 mm^2
Mounting System	Negative free deformation

원문: Fluke Calibration PG7302 메뉴얼(영문) · 제조사 원문 자료입니다. 사양은 제조사 사정에 따라 변경될 수 있습니다.

TS-TL-FLK-093

we measure, we calibrate, we validate.
㈜테솔 · www.tessol.com TS-TL-FLK-093 16 / 214
KOLAS 국제공인교정기관 · ISO/IEC 17025

1.2.2.3 PC-7300

Oil operated, oil lubricated piston-cylinder module characteristics. Used in PG7302 and PG7202 platforms (1 MPa/kg and higher only in PG7202).

Note

PC-7300 modules PC-7300-1, -2 and -5 may also be used in a PG7202 platform.

PC-7300-100

Operation	Oil operated, oil lubricated
Piston and Cylinder Material	Tungsten carbide
Nominal Diameter	11.2 mm
Nominal Area	98.1 mm^2
Mounting System	Simple free deformation

PC-7300-200

Operation	Oil operated, oil lubricated
Piston and Cylinder Material	Tungsten carbide
Nominal Diameter	7.9 mm
Nominal Area	49.0 mm^2
Mounting System	Simple free deformation

PC-7300-500

Operation	Oil operated, oil lubricated
Piston and Cylinder Material	Tungsten carbide
Nominal Diameter	5.0 mm
Nominal Area	19.6 mm^2
Mounting System	Simple free deformation

PC-7300-1

Operation	Oil operated, oil lubricated
Piston and Cylinder Material	Tungsten carbide
Nominal Diameter	3.5 mm
Nominal Area	9.8 mm^2
Mounting System	Simple free deformation

PC-7300-2

Operation	Oil operated, oil lubricated
Piston and Cylinder Material	Tungsten carbide
Nominal Diameter	2.5 mm
Nominal Area	4.9 mm^2
Mounting System	Simple free deformation

PC-7300-5

Operation	Oil operated, oil lubricated
Piston and Cylinder Material	Tungsten carbide
Nominal Diameter	1.6 mm
Nominal Area	2.0 mm^2
Mounting System	Simple free deformation

1.2.3 Mass Sets

All masses are delivered in molded, reusable, transit cases with custom inserts.

Masses > 50g

Material	304L non-magnetic stainless steel
Finish	Electropolished
Adjustment Tolerance	± 20 ppm of nominal value (manual mass sets, AMH automated mass handler mass sets do not have fixed adjustment tolerances)
Uncertainty of Measured Values	± 5 ppm or 1 mg, whichever is greater
Masses < 50g	± 1 mg

© 2011 Fluke Calibration

원문: Fluke Calibration PG7302 메뉴얼(영문) · 제조사 원문 자료입니다. 사양은 제조사 사정에 따라 변경될 수 있습니다.

we measure, we calibrate, we validate.
KOLAS 국제공인교정기관 · ISO/IEC 17025

Note

Masses designated "tare" are delivered without reported measured values and are intended only for use on the "tare" PG7000 in high line differential pressure measurement mode.

1.2.4 Pressure Measurements

1.2.4.1 PC-7100/7600

Note

For uncertainty in piston-cylinder effective area and typical measurement uncertainty in pressure defined by the piston gauge, see the piston-cylinder calibration report and current revision of Technical Note 7920TN01.

PC-7100/7600-10
PC-7100/7600-10-L

Sensitivity[1]	0.02 Pa + 0.5 ppm
Reproducibility[2]	± 2 ppm
Typical Drop Rate (35 kg)	0.2 mm/min

PC-7100/7600-20

Sensitivity[1]	0.04 Pa + 0.5 ppm
Reproducibility[2]	± 2 ppm
Typical Drop Rate (35 kg)	0.3 mm/min

PC-7100/7600-50

Sensitivity[1]	0.1 Pa + 0.5 ppm
Reproducibility[2]	± 2 ppm
Typical Drop Rate (35 kg)	0.5 mm/min

PC-7100/7600-100

Sensitivity[1]	0.2 Pa + 0.5 ppm
Reproducibility[2]	± 3 ppm
Typical Drop Rate (35 kg)	0.7 mm/min

PC-7100/7600-200

Sensitivity[1]	0.4 Pa + 0.5 ppm
Reproducibility[2]	± 3 ppm
Typical Drop Rate (35 kg)	1.0 mm/min

1 Sensitivity: The smallest variation in input detectable in output.

Note

Piston-cylinder modules designated "tare" are delivered without reported values and are intended only for use on the "tare" PG7000 in high line differential pressure measurement mode.

원문: Fluke Calibration PG7302 메뉴얼(영문) · 제조사 원문 자료입니다. 사양은 제조사 사정에 따라 변경될 수 있습니다.

TS-TL-FLK-093

we measure, we calibrate, we validate.
㈜테솔 · www.tessol.com TS-TL-FLK-093 18 / 214
KOLAS 국제공인교정기관 · ISO/IEC 17025

1.2.4.2 PC-7200

Note

For uncertainty in piston-cylinder effective area and typical measurement uncertainty in pressure defined by the piston gauge, see the piston-cylinder calibration report and current revision of Technical Note 7920TN01.

PC-7200-100

Sensitivity[1]	2 Pa + 1 ppm
Reproducibility[2]	± 5 ppm
Typical Drop Rate (50 kg)	0.10 mm/min

PC-7200-200

Sensitivity[1]	4 Pa + 1 ppm
Reproducibility[2]	± 5 ppm
Typical Drop Rate (50 kg)	0.15 mm/min

PC-7200-500

Sensitivity[1]	10 Pa + 1 ppm
Reproducibility[2]	± 5 ppm
Typical Drop Rate (50 kg)	0.20 mm/min

PC-7200-1

Sensitivity[1]	20 Pa + 1 ppm
Reproducibility[2]	± 5 ppm
Typical Drop Rate (50 kg)	0.25 mm/min

PC-7200-2

Sensitivity[1]	40 Pa + 1 ppm
Reproducibility[2]	± 5 ppm
Typical Drop Rate (50 kg)	0.50 mm/min

1 Sensitivity: The smallest variation in input detectable in output.
2 Reproducibility: Combined long term stability of piston-cylinder effective area and masses.

1.2.4.3 PC-7300

Note

For uncertainty in piston-cylinder effective area and typical measurement uncertainty in pressure defined by the piston gauge, see the piston-cylinder calibration report and current revision of Technical Note 7920TN01.

PC-7300-100

Sensitivity[1]	2 Pa + 1 ppm
Reproducibility[2]	± 5 ppm
Typical Drop Rate (50 kg)	0.02 mm/min

PC-7300-200

Sensitivity[1]	4 Pa + 1 ppm
Reproducibility[2]	± 5 ppm
Typical Drop Rate (50 kg)	0.04 mm/min

PC-7300-500

Sensitivity[1]	10 Pa + 1 ppm
Reproducibility[2]	± 5 ppm
Typical Drop Rate (50 kg)	0.10 mm/min

© 2011 Fluke Calibration

원문: Fluke Calibration PG7302 메뉴얼(영문) · 제조사 원문 자료입니다. 사양은 제조사 사정에 따라 변경될 수 있습니다.

we measure, we calibrate, we validate.
KOLAS 국제공인교정기관 · ISO/IEC 17025
㈜테솔 · www.tessol.com TS-TL-FLK-093 19 / 214
TS-TL-FLK-093

PC-7300-1

Sensitivity[1]	20 Pa + 1 ppm
Reproducibility[2]	± 5 ppm
Typical Drop Rate (50 kg)	0.20 mm/min

PC-7300-2

Sensitivity[1]	40 Pa + 1 ppm
Reproducibility[2]	± 5 ppm
Typical Drop Rate (50 kg)	0.40 mm/min

PC-7300-5

Sensitivity[1]	100 Pa + 1 ppm
Reproducibility[2]	± 5 ppm
Typical Drop Rate (50 kg)	1.00 mm/min

1 Sensitivity: The smallest variation in input detectable in output.

2 Reproducibility: Combined long term stability of piston-cylinder effective area and masses.

1.3 Terminal and Platform Front and Rear Panels

1.3.1 Terminal Front and Rear Panels

1.3.1.1 PG Terminal Front Panel

The front panel assembly provides a 2 x 20 vacuum fluorescent display and a 4 x 4 membrane keypad for local user interface. The terminal front panel assembly is the same for all PG7000 models.

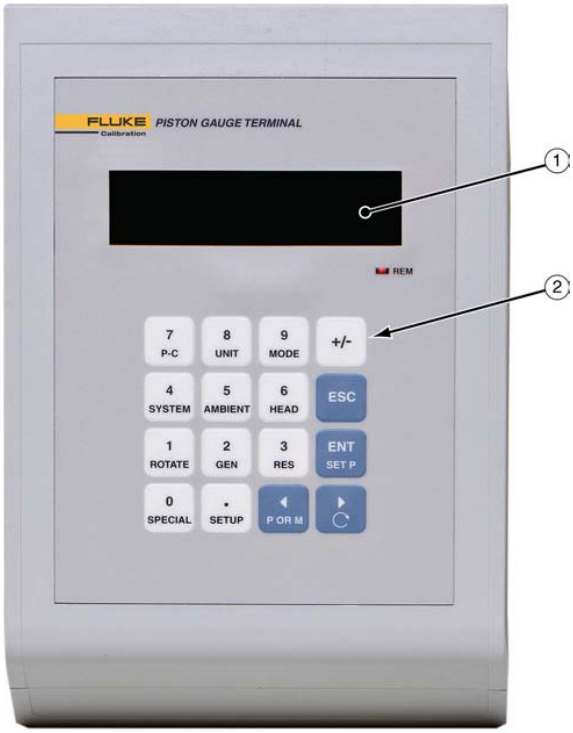

① Fluorescent display

② Keypad

Figure 1. PG Terminal Front Panel

원문: Fluke Calibration PG7302 메뉴얼(영문) · 제조사 원문 자료입니다. 사양은 제조사 사정에 따라 변경될 수 있습니다.

we measure, we calibrate, we validate.
KOLAS 국제공인교정기관 · ISO/IEC 17025

1.3.1.2 PG terminal Rear Panel

The rear panel assembly provides the communications connection to the PG7000 Platform and the power connection module. The terminal rear panel assembly is the same for all PG7000 models.

1. Power switch
2. Fuse
3. Power receptacle
4. Connector for cable to PG7000 (25-pin)
5. Cooling fan

Figure 2. PG Terminal Rear Panel

1.3.2 Platform Rear Panels

The PG7000 Platform rear panels provide the connection to the PG Terminal, remote communication connections and pressure connection ports. The rear panels of all PG7000 models are identical except for the pressure connections (see Figure 3, # 7).

1. COM2 (RS232) - External Barometer, External Vacuum Gauge (PG7601 only) and Pass Through Communications
2. COM3 (RS232) - Automated Pressure Generation/Control Component
3. Temperature - Humidity Probe
4. COM1 (RS232) - Remote Host Communications
5. IEEE-488 - Remote Host Communications
6. AMH Connection
7. Pressure Ports:
   PG7102 - TEST port: DH200
   PG7202 - TEST and DRAIN ports: DH500
   PG7302 - TEST port: DH500
   PG7601 - TEST and VACUUM vent ports: DH200
   Vacuum pull down port on front left side: KF25
8. PG7000 Terminal Port

Figure 3. PG Platform Rear Panel

© 2011 Fluke Calibration

원문: Fluke Calibration PG7302 메뉴얼(영문) · 제조사 원문 자료입니다. 사양은 제조사 사정에 따라 변경될 수 있습니다.

we measure, we calibrate, we validate.
㈜테솔 · www.tessol.com TS-TL-FLK-093 21 / 214
KOLAS 국제공인교정기관 · ISO/IEC 17025

TS-TL-FLK-093

Notes

원문: Fluke Calibration PG7302 메뉴얼(영문) · 제조사 원문 자료입니다. 사양은 제조사 사정에 따라 변경될 수 있습니다.

2. Installation

2.1 Unpacking And Inspection

2.1.1 Removing from Packaging

A typical PG7000 system includes the PG7000 Platform (see Section 2.1.1.1), a mass set, (see Section 2.1.1.2), one or more piston-cylinder modules (see Section 2.1.1.3) and other accessories such as an AMH automated mass handler and/or pressure generation and control components (see the accessory Operation and Maintenance Manual or Instruction Sheet).

2.1.1.1 Platform

⚠ Caution

The mass loading bell is a metrological element that is part of the mass set. Like all of the masses, it is preferable not to handle it with bare hands. Protective gloves are provided in the accessory kit of each PG7000 Platform.

The PG7000 Platform is shipped in a reusable, molded shipping and storage case.

❶ Open the PG7000 shipping and storage case (it is the large, 66 cm x 53 cm x 47 cm case).

❷ Remove the PG Terminal and accessories from upper packing insert. Inspect and inventory the accessories (see Section 2.1.2).

❸ Remove the upper packing insert.

❹ Carefully lift the PG7000 Platform from its position in the lower packing insert. Note the orientation so that the same orientation will be used when PG7000 is repacked.

❺ Reinstall the upper packing insert into the shipping and storage case and store in a safe place.

2.1.1.2 Mass Set

⚠ Caution

The stability over time of PG7000 pressure measurements is a function of the stability of the masses loaded on the piston. Precautions should be taken in handling the masses to minimize influences that may change their mass. This includes always wearing protective gloves when handling the masses to avoid contaminating them with body oils and perspiration. Protective gloves are provided in the accessory kits of PG7000 Platforms.

The mass set accessories are shipped in a separate corrugated container. Open the corrugated container and inspect and inventory the accessories.

The PG7000 masses are shipped in reusable, molded shipping and storage cases. The PG7000 masses should be removed from their shipping cases and inventoried when actually setting up the PG7000 system.

 © 2011 Fluke Calibration

원문: Fluke Calibration PG7302 메뉴얼(영문) · 제조사 원문 자료입니다. 사양은 제조사 사정에 따라 변경될 수 있습니다.

2.1.1.3 Piston-Cylinder Module(s)

The piston-cylinder modules are shipped in Acetal bullet cases that are packed in corrugated containers with custom foam inserts.

Open the corrugated containers and remove the piston-cylinder modules and accessories.

The bullet cases screw open by turning the lid counterclockwise.

⚠ Caution

When reinstalling an oil (PC-7300) or liquid lubricated (PC-7200) piston-cylinder module in its bullet case, be sure to empty out any liquid that may have collected in the hole in the bottom of the case. Excess liquid will not compress, making it difficult to fully close the case and could result in damaging it.

2.1.1.4 Automated Mass Handler

See the AMH-38/AMH-100 Operation and Maintenance Manual.

2.1.2 Inspecting Contents

Check that all items are present and have NO visible signs of damage. A parts list of items supplied is provided in Section 2.1.2.1 for PG7000, Section 2.1.2.2 for mass sets, and Section 2.1.2.3 for piston-cylinder modules.

2.1.2.1 Platform

Each PG7000 Platform is delivered complete with accessories as listed by part number in Tables 1 through 4.

원문: Fluke Calibration PG7302 메뉴얼(영문) · 제조사 원문 자료입니다. 사양은 제조사 사정에 따라 변경될 수 있습니다.

Table 1. PG7102 Parts List

DESCRIPTION	PG7102 P/N 3069572 NON-CE	PG7102 P/N 3072317 CE
Platform	3117734	3117752
Manual Mass Bell	3071537	
Terminal	3069735	
PG Terminal to Platform Cable		
Non-CE (DB25M - DB25F, ≈ 1.8 meters)	3068724	
CE (DB25M - DB25F, ≈ 1.5 meters)		3072235
Power Cable	3133781 (Black)	3153005 (Gray)
TH Probe Assembly	2106009	
Accessory Kit	3117741	
NIP, SS, DH200, 2.75 in.	3068377	
ADPT, SS, DH200 F x 1/8 in. NPT F	3068547	
O-ring, Buna 2-242 (2 ea.)	3135041	
Storage Cover, 7600 Type	3135594	
Allen Wrench, 2.5 mm	3136044	
Allen Wrench, 3 mm	3135703	
Allen Wrench, 5 mm	3136098	
Spanner Wrench (Metrological)	3068940	
Krytox® GPL205/6 0.5 oz.	2493420	
Gift Kit with Gloves	3123777	
ADPT, DH200 M x 1/8 in. swage	3069062	
Documentation		
Calibration Report (PG Platform)	3152121	
Calibration Report (Mass Bell)	3152121	
Technical Data	3152139	
PG7000 Operation & Maintenance Manual	3152117	
Documentation CD	3139043	

© 2011 Fluke Calibration

원문: Fluke Calibration PG7302 메뉴얼(영문) · 제조사 원문 자료입니다. 사양은 제조사 사정에 따라 변경될 수 있습니다.

Table 2. PG7202 Parts List

DESCRIPTION	PG7202 #3070404 NON-CE	PG7202 #3072395 CE
Platform	3119996	3120027
Manual Mass Bell	3071537	
Terminal	3069735	
PG Terminal to Platform Cable		
Non-CE (DB25M - DB25F, ≈ 1.8 meters)	3068724	
CE (DB25M - DB25F, ≈ 1.5 meters)		3072235
Power Cable	3133781 (Black)	3153005 (Gray)
TH Probe Assembly	2106009	
Accessory Kit	3120011	
DH500 M x 1/8 in. NPT F	3142684	
O-ring, Buna 2-242 (2 ea.)	3135041	
Storage Cover, 7600 Type	3135594	
Allen Wrench, 2.5 mm	3136044	
Allen Wrench, 3 mm	3135703	
Allen Wrench, 5 mm	3136098	
Wrench, 5/8 in.	3139417	
Collar, SS, DH500	3068607	
Krytox® GPL205/6 0.5 oz.	2493420	
Gift Kit with Gloves	3123777	
Documentation		
Calibration Report (PG)	3152121	
Calibration Report (Mass Bell)	3152121	
Technical Data	3152139	
PG7000 Operation & Maintenance Manual	3152117	
Documentation CD	3139043	

원문: Fluke Calibration PG7302 메뉴얼(영문) · 제조사 원문 자료입니다. 사양은 제조사 사정에 따라 변경될 수 있습니다.

Table 3. PG7302 Parts List

DESCRIPTION	PG7302 P/N 3069747 NON-CE	PG7302 P/N 3072339 CE
Platform	3118073	3118086
Manual Mass Bell	3071537	
Terminal	3069735	
PG Terminal to Platform Cable		
Non-CE (DB25M - DB25F, ≈ 1.8 meters)	3068724	
CE (DB25M - DB25F, ≈ 1.5 meters)		3072235
Power Cable	3133781 (Black)	3153005 (Gray)
TH Probe Assembly	2106009	
Accessory Kit	3120011	
DH500 M x 1/8 in. NPT F	3142684	
O-ring, Buna 2-242 (2 ea.)	3135041	
Storage Cover, 7600 Type	3135594	
Allen Wrench, 2.5 mm	3136044	
Allen Wrench, 3 mm	3135703	
Allen Wrench, 5 mm	3136098	
Wrench, 5/8 in.	3139417	
Collar, SS, DH500	3068607	
Krytox® GPL205/6 0.5 oz.	2493420	
Gift Kit with Gloves	3123777	
Documentation		
Calibration Report (PG)	3152121	
Calibration Report (Mass Bell)	3152121	
Technical Data	3152139	
PG7000 Operation & Maintenance Manual	3152117	
Documentation CD	3139043	

© 2011 Fluke Calibration

원문: Fluke Calibration PG7302 메뉴얼(영문) · 제조사 원문 자료입니다. 사양은 제조사 사정에 따라 변경될 수 있습니다.

Table 4. PG7601 Parts List

DESCRIPTION	PG7601 P/N 3069028 NON-CE	PG7601 P/N 3072258 CE
Platform	3117525	3117540
Manual Mass Bell	3071603	
Bell Jar and Seal	3068933 and 3068634	
Terminal	3069735	
PG Terminal to Platform Cable		
Non-CE (DB25M - DB25F, ≈ 1.8 meters)	3068724	
CE (DB25M - DB25F, ≈ 1.5 meters)		3072235
Power Cable	3133781 (Black)	3153005 (Gray)
TH Probe Assembly	2106009	
Accessory Kit	3117533	
NIP, SS, DH200, 2.75 in.	3068377	
ADPT, SS, DH200 F x 1/8 in. NPT F	3068547	
O-ring, Buna 2-242 (2 ea.)	3135041	
Storage Cover, 7600 Type	3135594	
Allen Wrench, 2.5 mm	3136044	
Allen Wrench, 3 mm	3135703	
Allen Wrench, 5 mm	3136098	
Spanner Wrench (Metrological)	3068940	
Krytox® GPL205/6 .5 oz.	2493420	
Gift Kit with Gloves	3123777	
ADPT, DH200 M x 1/8 in. swage	3069062	
Valve, Vacuum Relief	3124573	
Documentation		
Calibration Report (PG)	3152121	
Calibration Report (Mass Bell)	3152121	
Technical Data	3152139	
PG7000 Operation & Maintenance Manual	3152117	
Documentation CD	3139043	

원문: Fluke Calibration PG7302 메뉴얼(영문) · 제조사 원문 자료입니다. 사양은 제조사 사정에 따라 변경될 수 있습니다.

2.1.2.2 Mass Set

PG7000 mass sets are composed of different combinations of individual masses and accessories depending on the specific mass set ordered (see Tables 5 - 9).

Table 5. Manual Mass Set Parts List (excluding 80 and 100 kg)

DESCRIPTION	PART NO.	
Mass Set	Refer to Table 9	
Reusable Molded Transit Case with Foam Inserts	3068969	3068991
35 kg set	1 ea.	1 ea.
40 kg set	1 ea.	1 ea.
45 kg set	1 ea.	1 ea.
55 kg set	1 ea.	2 ea.
Mass Set Tray and Spindle	3147461 and 3148764	
Dust Covers	3138017 and 3138130	
Calibration Report	3152121	

Table 6. Manual Mass Set Parts List (80 and 100 kg)

DESCRIPTION	PART NO.	
Mass Set	Refer to Table 9	
Reusable Molded Transit Case with Foam Inserts	3068969	3068984
80 kg set	1 ea.	2 ea.
100 kg set	1 ea.	3 ea.
Mass Set Tray and Spindle	3147461 and 3148764	
Dust Covers	3138017 and 3138127	
Calibration Report	3152121	

Table 7. AMH-38 Mass Set Parts List

DESCRIPTION	PART NO.	
Mass Set	Refer to Table 9	
Reusable Molded Transit Case with Foam Inserts	3123990	3069004
13 kg set (MS-AMH-13)	1 ea.	1 ea.
25 kg set (MS-AMH-25)	1 ea.	1 ea.
39 kg set (MS-AMH-38)	1 ea.	1 ea.
Calibration Report	3152121	

Table 8. AMH-100 Mass Set Parts List

DESCRIPTION	PART NO.	
Mass Set	Refer to Table 9	
Reusable Molded Transit Case with Foam Inserts	3123990	3068984
40 kg set (MS-AMH-40)	1 ea.	1 ea.
60 kg set (MS-AMH-60)	1 ea.	2 ea.
80 kg set (MS-AMH-80)	1 ea.	2 ea.
100 kg set (MS-AMH-100)	1 ea.	3 ea.
Calibration Report	3152121	

© 2011 Fluke Calibration

원문: Fluke Calibration PG7302 메뉴얼(영문) · 제조사 원문 자료입니다. 사양은 제조사 사정에 따라 변경될 수 있습니다.

we measure, we calibrate, we validate.
KOLAS 국제공인교정기관 · ISO/IEC 17025
㈜테솔 · www.tessol.com TS-TL-FLK-093 29 / 214

TS-TL-FLK-093

Table 9. Mass Set Compositions

DESIGNATION	PART #	NOMINAL TOTAL MASS (kg)	MASS SET COMPOSITION								
			10 kg	5 kg	2 kg	1 kg	0.5 kg	0.2 kg	0.1 kg	MAKE-UP MASS (kg)	
MS-7001-35	3069850	35	-	5	2	1	1	2	1	1 (4.5)	-
MS-7002-35	3069861	35	-	5	2	1	1	2	1	1 (4)	-
MS-7002-40	3070021	40	-	6	2	1	1	2	1	1 (4)	-
MS-7002-45	3069980	45	-	7	2	1	1	2	1	1 (4)	-
MS-7002-55	3069877	55	-	9	2	1	1	2	1	1 (4)	-
MS-7002-80	3070000	80	6	1	2	1	1	2	1	1 (9)	-
MS-7002-100	3070017	100	8	1	2	1	1	2	1	1 (9)	-
DESIGNATION	**PART #**	**NOMINAL TOTAL MASS (kg)**	**MASS SET COMPOSITION**									
			10 kg	**6.4 kg**	**6.2 kg**	**3.2 kg**	**1.6 kg**	**0.8 kg**	**0.4 kg**	**0.2 kg**	**0.1 kg**	**BELL, SHAFT, BINARY MASS CARRIER (3 PARTS)**
MS-AMH-13	3071491	13	-	-	1	1	1	1	1	1	1	1
MS-AMH-25	3071484	25	-	-	3	1	1	1	1	1	1	1
MS-AMH-38	3071433	38	-	-	5	1	1	1	1	1	1	1
MS-AMH-40	3071528	40	3	1	-	1	1	1	1	1	1	1
MS-AMH-60	3071519	60	5	1	-	1	1	1	1	1	1	1
MS-AMH-80	3071504	80	7	1	-	1	1	1	1	1	1	1
MS-AMH-100	3071440	100	9	1	-	1	1	1	1	1	1	1

Table 10. Mass Set Compatibility

DESIGNATOR	NOMINAL TOTAL MASS (kg)	PG7102	PG7202	PG7302	PG7601
MS-7001-35	35				•
MS-7002-35	35	•	•	•	
MS-7002-40	40	•	•	•	
MS-7002-45	45	•	•	•	
MS-7002-55	55	•	•	•	
MS-7002-80	80	•[1]	•[1]	•	
MS-7002-100	100	•[1]	•[1]	•	
MS-AMH-13	13				•
MS-AMH-25	25				•
MS-AMH-38	38				•
MS-AMH-40	40	•	•	•	
MS-AMH-60	60	•[1]	•[1]	•	
MS-AMH-80	80	•[1]	•[1]	•	
MS-AMH-100	100	•[1]	•[1]	•	

[1] These mass sets, on certain piston-cylinder sizes, can cause the maximum working pressure of the PG Platform to be exceeded. Do not exceed the following maximum working pressures:

1. PG7201: 11 MPa (1 600 psi)
2. PG7202: When using PC-7200 piston-cylinder modules: 110 MPa (16 000 psi)
   When using PC-7300 piston-cylinder modules: 200 MPa (30 000 psi)
3. PG7302:500 MPa (72 500 psi)

원문: Fluke Calibration PG7302 메뉴얼(영문) · 제조사 원문 자료입니다. 사양은 제조사 사정에 따라 변경될 수 있습니다.

we measure, we calibrate, we validate.
㈜테솔 · www.tessol.com TS-TL-FLK-093 30 / 214
KOLAS 국제공인교정기관 · ISO/IEC 17025

Note

The mass loading bell and piston make up part of the total mass load. The mass loading bell for loading manual mass sets is delivered with the PG7000 platform. The mass loading bell for AMH mass sets is delivered with the mass set. Piston-cylinder modules are purchased and delivered separately.

2.1.2.3 Piston-Cylinder Module(s)

Table 11. PC-7100/7600 Piston-Cylinder Modules Parts List

	10 kPa PC-7100/ 7600-10-L	10 kPa PC-7100/ 7600-10 TC	20 kPa PC-7100/ 7600-20	50 kPa PC-7100/ 7600-50	100 kPa PC-7100/ 7600-100	200 kPa PC-7100/ 7600-200
Piston-Cylinder Kit	3171975	3070095	3071581	3070109	3071615	3070111
Piston-Cylinder Module	3125106	3122937	3122116	3124088	3122234	3124194
Hermetic Acetal Bullet Case	3070203	3070203	3070203	3070203	3070203	3070203
Accessory Kit	3125242	3122928	3122229	3124345	3124345	3124345
O-rings	3134867 3136458	3134867 3136458	3134867 3136458	3134880 3136458	3134880 3136458	3134880 3136458
Insertion Tool	3071793	3071841	N/A	N/A	N/A	N/A
Calibration Report	3152121	3152121	3152121	3152121	3152121	3152121

Table 12. PC-7200 Piston-Cylinder Modules Parts List

	100 kPa PC-7200-100	200 kPa PC-7200-200	500 kPa PC-7200-500	1 MPa PC-7200-1	2 MPa PC-7200-2
Piston-Cylinder Kit	3070419	3070428	3070437	3070443	3070455
Piston-Cylinder Module	3120245	3120250	3120292	3120303	3120326
Hermetic Acetal Bullet Case	3071852	3071852	3071852	3071852	3071852
Accessory Kit	3120277	3120277	3120315	3120315	3120315
O-rings	(2) 3134158 2721018 2644003	(2) 3134158 2721018 2644003	(2) 3134158 2721018 2644003	(2) 3134158 2721018 2644003	(2) 3134158 2721018 2644003
Anti-Extrusion Ring	N/A	N/A	3148417	3148417	3148417
Syringe	3139439	3139439	3139439	3139439	3139439
Syringe tips	(3) 3139421	(3) 3139421	(3) 3139421	(3) 3139421	(3) 3139421
Synturion 6 fluid	3120289	3120289	-	-	-
Sebacate fluid	-	-	3120590	3120590	3120590
Calibration Report	3152121	3152121	3152121	3152121	3152121

© 2011 Fluke Calibration

원문: Fluke Calibration PG7302 메뉴얼(영문) · 제조사 원문 자료입니다. 사양은 제조사 사정에 따라 변경될 수 있습니다.

we measure, we calibrate, we validate.
㈜테솔 · www.tessol.com TS-TL-FLK-093 31 / 214
KOLAS 국제공인교정기관 · ISO/IEC 17025

TS-TL-FLK-093

Table 13. PC-7300 Piston-Cylinder Modules Parts List

	100 kPa PC-7300-100	200 kPa PC-7300-200	500 kPa PC-7300-500	1 MPa PC-7300-1	2 MPa PC-7300-2	5 MPa PC-7300-5
Piston-Cylinder Kit	3070039	3070042	3070056	3070063	3070074	3070088
Piston-Cylinder Module	3118918	3118976	3119032	3119116	3119178	3119229
Hermetic Acetal Bullet Case	3071865	3071865	3071865	3071865	3071865	3071865
Accessory Kit	3119102	3119102	3119102	3119366	3119366	3119366
O-rings	2527053 3134022	2527053 3134022	2527053 3134022	1785497 (5) 927863	1785497 (5) 927863	1785497 (5) 927863
Calibration Reports	3152121	3152121	3152121	3152121	3152121	3152121

2.2 Site Requirements

The exact PG7000 system installation is affected by the elements other than the PG7000 Platform that make up the PG7000 system.

When selecting and preparing a site to set up the PG7000 system, the following should be considered:

- **Ambient conditions:** To achieve optimum metrological performance, ambient conditions should be controlled and maintained within the following:
  - ***Temperature:*** 19 to 23 °C, minimize rate of change of temperature.
  - ***Relative Humidity:*** 10 to 60 %RH (non-condensing).
  - ***Ambient Pressure:*** Minimize external influences that will cause barometric instability.
  - ***Air Currents:*** Do not install the PG7000 Platform under a source of vertical air currents such as an overhead air conditioning duct. These can blow on the mass load and add unquantified forces.
  - ***Vibration:*** Minimize local vibration. Excessive vibration will reduce the stability of the pressures defined by PG7000 (vibration affects the floating piston). Excessive high frequency vibration, for example from a vacuum pump on the same table as the PG7000, may affect piston sensitivity.
- **Bench stability:** Up to 100 kg may be loaded and unloaded onto the PG7000 Platform. The bench on which the PG7000 sits should not deflect significantly under the mass load changes. This can be verified by setting the PG7000 Platform on the bench, leveling it, loading and unloading the complete mass set while observing whether the level setting changes.
- **Location of other components:** Plan the space required and a convenient layout for the complete PG7000 system including the PG Terminal, mass set, pressure generation/control component(s), test instrument connection and computer (if present). If using a PPC, MPC, GPC or OPG to generate/control pressure, see its Operation and Maintenance Manual for information on installing it. If a Fluke Calibration interconnections kit is being used to interconnect the components, see its instruction sheet.
- **Electrical and pressure supplies:** Plan the supply of electrical power to the PG Terminal and to the pressure generation/control component(s), if needed. If using a PPC, MPC, GPC or OPG to generate/control pressure, see its Operation and Maintenance Manual for information on the pressures source(s) it needs and how to connect them. Gas supplied to a PC-7100/7600 piston-cylinder module must be clean and dry (instrument grade minimum, high purity preferred) to avoid contaminating the piston-cylinder gap.
- **Reference vacuum supply (PG7601 only):** Plan for the vacuum connection to the platform or the optional AMH automated mass handler and the location of the reference vacuum pump.
- **Bell jar placement (PG7601 only):** Plan a location for the bell jar when it is removed from the platform to load and unload masses. A small shelf is often used for this purpose.
- **AMH automated mass handler (optional) placement:** If an AMH is being used, plan electrical and pneumatic connections to it as well as a location to place it when it is removed from the platform (see the AMH-38/AMH-100 Operation and Maintenance Manual).

원문: Fluke Calibration PG7302 메뉴얼(영문) · 제조사 원문 자료입니다. 사양은 제조사 사정에 따라 변경될 수 있습니다.

2.3 Setup

2.3.1 Preparing for Operation

Note

Before setting up the PG7000 system, see Section 2.2 for information on site requirements.

To prepare PG7000 for check out and operation:

❶ Set up the PG7000 Platform (see Section 2.3.1.1).

❷ If an optional AMH-100 mass set is being used, set it up with its mass set (see the AMH-38/AMH-100 Operation and Maintenance Manual).

❸ Make the system pressure interconnections (see Section 2.3.1.2).

❹ If a manual mass set is being used, set up the manual mass set (see Section 2.3.1.3).

2.3.1.1 Setting Up the Platform

To set up the PG7000 Platform proceed as follows:

❶ Place the PG7000 Platform on the site table in the desired orientation. Though the rear panel is usually in the back, any orientation can be used.

❷ Place the PG7000 Terminal at the desired location.

❸ Connect the PG7000 Terminal to the PG7000 Platform using the 25-pin cable supplied.

❹ Connect the PG7000 Temperature - Humidity Probe per Figure 3.

❺ Connect electrical power (85 to 264 VAC, 50/60 Hz) to the PG7000 Terminal using the power cable supplied. Any grounded power cable with a standard IEC320-313 connection may be used.

❻ **(PG7601 Only)** - Install the vacuum vent valve kit on the vacuum vent port on the rear of the PG7000 Platform. Refer to the instruction sheet provided with the vent valve assembly.

Connect the reference vacuum source and shutoff valve to the reference vacuum port. Take measures to assure that vacuum oil cannot return to the PG7601. If an optional AMH-38 automated mass handler is being used, the reference vacuum may be connected to the larger KF40 vacuum connection on the AMH-38 vacuum chamber.

❼ If an external barometer and/or vacuum gauge is/are being used, establish communications between the barometer/vacuum gauge and the PG7000 Platform by connecting the external device RS232 port to the PG7000 Platform Com2 port and setting up PG7000 to read and use an external barometer and/or vacuum gauge (see Section 3.11.5.4, 3.11.5.5). Set the external barometer head height (see Section 3.11.3.3).

❽ If an automated pressure generation/control component is being used, establish communications between the automated pressure generation/control component and the PG7000 Platform by connecting the generation/control component RS232 port to the PG7000 Platform COM3 port and setting up PG7000 to use an automated pressure generation/control component (see Section 3.9.9).

❾ If an AMH automated mass handling system is being used, set up the AMH mass set and the AMH mass handler following the instructions in the AMH-38/AMH-100 Operation and Maintenance Manual.

❿ Level the platform using the PG7000 Platform's two leveling feet and the level mounted on the front of the platform. (Or on the optional AMH mass handling system.)

© 2011 Fluke Calibration

원문: Fluke Calibration PG7302 메뉴얼(영문) · 제조사 원문 자료입니다. 사양은 제조사 사정에 따라 변경될 수 있습니다.

we measure, we calibrate, we validate.
㈜테솔 · www.tessol.com TS-TL-FLK-093 33 / 214
KOLAS 국제공인교정기관 · ISO/IEC 17025

TS-TL-FLK-093

2.3.1.2 System Pressure Interconnections

Interconnect the PG7000 Platform, pressure generation/control components and a test connection.

The pressure connection on the PG7000 TEST port is:

- **PG7102/PG7601:** DH200 (DH200 is equivalent to AE SF250C,HIP LF4, etc.). Adapters to convert the DH200 connection to 1/8 in. NPT female and 1/8 in. swage are provided with PG7102 and PG7601 Platform accessories.
- **PG7202:** DH500 (DH500 is equivalent to AE F250C, HIP HF4, etc.). Connect the gas test medium pressure control/generation component to the TEST port. If the PG7202 is to be operated in oil, connect the oil pressure control/generation component to the DRAIN port (the gas or oil component is disconnected when not in use, see Section 2.3.3).
- **PG7302:** DH500 (DH500 is equivalent to AE F250C, HIP HF4, etc.).

Note

If using a standard interconnections kit such as PK-7600-PPC/MPC P/N 3069508, PK-7600-PPC/MPC-DIF P/N 3070127 or PK-7100-MPCD-DIF P/N 3070226, see the instruction sheet provided with the kit for installation instructions. If an OPG1 or GPC1 generator/controller is being used, pressure interconnecting hardware is included with it. See its Operation and Maintenance Manual for connection instructions.

2.3.1.3 Setting Up a Mass Set

Note

If installing an MS-AMH-xxx mass set for use with an AMH automated mass handling system, see the AMH-38/AMH-100 Operation and Maintenance Manual.

To install a PG7000 manual mass set, place the mass loading tray (provided with the mass set accessories) at the desired location then install the individual masses on the mass loading tray. See the AMH-38/AMH-100 Operation and Maintenance Manual for instructions on installation of an AMH mass set for automated mass handling.

⚠ Caution

It is VERY IMPORTANT that the individual masses be installed on the mass loading tray in proper sequence. This will ensure that PG7000 mass loading instructions are executed properly (carefully follow the instructions provided in Section 2.3.1.3, Installing Masses on the Mass Loading Tray).

Installing Masses on the Mass Loading Tray (Manual Mass Set)

PG7000 masses are shipped in reusable, molded shipping and storage cases. One of the cases contains a 4.0, 4.5 or 5 kg mass and the masses of 2 kg and under, the other case(s) contain(s) the main masses of 10 or 5 kg each. Each mass is packed in a sealed plastic bag and then placed in a protective shipping insert.

⚠ Caution

The stability over time of PG7000 pressure measurements is a function of the stability of the masses loaded on the piston. Precautions should be taken in handling the masses to minimize influences that may change their mass. This includes always wearing protective gloves when handling the masses to avoid contaminating them with body oils and perspiration. Protective gloves are provided in the accessory kits of PG7000 Platforms.

원문: Fluke Calibration PG7302 메뉴얼(영문) · 제조사 원문 자료입니다. 사양은 제조사 사정에 따라 변경될 수 있습니다.

To install the masses on the mass loading tray, proceed as follows:

❶ Open the shipping cases.

❷ **Install the *main* masses:** The *main* masses (a series of 10 kg masses if the mass set is > 55 kg, a series of 5 kg masses if the mass set is < 60 kg) are installed horizontally aligned on the mass loading spindle.

❸ The *main* masses are sequentially numbered starting with he number **1**. The *main* mass with the **highest** sequential number is installed first at the bottom of the stack (i.e., the first mass loaded on the tray). The rest of the *main* masses should be stacked **upwards in descending** order ending with *main* mass sequential number **1**. Be careful NOT to confuse the *makeup* mass (refer to next item) with *main* mass **1**.

❹ **Install the *make up* mass:** The *make up* mass is a single mass sequentially numbered **1**. It has the same diameter as the *main* masses. It is a 9 kg mass if the *main* masses are 10 kg. It is 4 or 4.5 kg if the *main* masses are 5 kg.

The *make up* mass is placed on top of the *main* mass stack. It is always the top of the stack.

❺ **Install the *fractionary* masses:** The *fractionary* masses are all the masses of lower value than the *main* masses and *makeup* mass. These are masses of 5 kg and under for mass sets with 10 kg *main* masses. They are masses of 2 kg and under for mass sets with 5 kg *main* masses. *Fractionary* masses of 1 to 5 kg are discs with a central hole. *Fractionary* masses of 100 to 500 g are solid, small diameter pucks. *Fractionary* masses of 50 g and under are grams masses packed and stored in their own separate storage case.

Fractionary mass discs and pucks are installed vertically in the corresponding slots in the mass loading tray. Use a consistent setup for the sequence number when there are two masses (e.g., always load sequential number **1** in the front).

2.3.2 installing a Piston-Cylinder Module into the Platform

To operate the PG7000 Platform, a piston-cylinder module must be installed in its mounting post. To install a piston-cylinder module in the PG7000 Platform, proceed as follows:

❶ **Remove the PG7000 Platform mounting post plug.** Unscrew the ORANGE plastic mounting post plug that is installed in the PG7000 Platform mounting post. Rotate counterclockwise to remove.

❷ **Remove the piston-cylinder module from its bullet case.** Select a piston-cylinder module. Open the piston-cylinder module bullet case by rotating its lid counterclockwise. Remove the piston-cylinder module from the bullet case base by unthreading it from the case. Hold the piston-cylinder module body by the knurled area and rotate it counterclockwise.

Note

PC-7200 gas operated, liquid lubricated piston-cylinder modules are delivered with their lubricating liquid reservoir drained. The reservoir must be filled prior to using the piston-cylinder module. If installing a PC-7200 gas operated, liquid lubricated piston-cylinder module, see Section 5.3.3 for instructions on how to fill the module's liquid lubrication reservoir prior to installation, then continue the procedure from this point.

⚠ Caution

When reinstalling an oil or liquid lubricated gas piston-cylinder module in its bullet case, be sure to empty out any liquid that may have collected in the hole in the bottom of the case. The liquid will not compress, making it difficult to fully close the case and could result in damaging it.

© 2011 Fluke Calibration

원문: Fluke Calibration PG7302 메뉴얼(영문) · 제조사 원문 자료입니다. 사양은 제조사 사정에 따라 변경될 수 있습니다.

TS-TL-FLK-093

we measure, we calibrate, we validate. ㈜테솔 · www.tessol.com TS-TL-FLK-093 35 / 214

KOLAS 국제공인교정기관 · ISO/IEC 17025

❸ **Place the piston-cylinder module in the PG7000 Platform mounting post.** Place the piston-cylinder module (thread down) into the PG7000 Platform mounting post (see Figure 4 below).

Note

If installing the piston-cylinder module into a PG7302 or a PG7202 to be operated with oil, first use the oil generation control component to fill the counter bore in the mounting post with oil until it just starts to overflow.

❹ **Purge the air from under the piston-cylinder module (PC-7300 modules only in PG7302 or PG7202).** Rotate the piston-cylinder module clockwise until all threads are engaged and there is no gap between the piston-cylinder module and the mounting post. Back the piston-cylinder module off slightly by rotating it counterclockwise 3/4 turn. Slowly supply additional oil to the mounting post from the pressure generation/control component. Watch the oil run off tube on the bottom right of the platform. As soon as oil appears or can be seen flowing, stop the oil supply.

❺ **Screw the piston-cylinder module into the PG7000 Platform mounting post.** Rotate the piston-cylinder module clockwise until all threads are engaged and there is NO gap between the piston-cylinder module and the PG7000 mounting post. Slight resistance will be encountered in the second half of travel as the piston-cylinder module O-rings seat in the mounting post.

Figure 4. Piston-Cylinder Module Installation

⚠ Caution

- **Low torque manual rotation is all that should be required to fully seat the piston-cylinder module into the PG7000 mounting post. Never force the piston-cylinder module into the mounting post.**
- **Always maintain PG7202 and PG7302 piston- cylinder modules vertical with the piston cap up. Do not invert the assembly, as this might allow liquid to run up into the piston head and into the adjustment mass and cap. Liquid contamination of the piston head and cap changes the mass of the piston assembly and could lead to out of tolerance pressure definitions at low mass loads. If liquid contaminates the adjustment mass and cap, disassemble the module and clean it (see Sections 5.3.1, 5.3.4, 5.3.2.2).**

2.3.3 Switching a PG7202 Between Gas Operation and Oil Operation

PG7202 can be operated with gas as the pressurized medium using PC-7200 gas operated, liquid lubricated modules or with oil as the pressurized medium using oil operated PC-7300 modules.

원문: Fluke Calibration PG7302 메뉴얼(영문) · 제조사 원문 자료입니다. 사양은 제조사 사정에 따라 변경될 수 있습니다.

TS-TL-FLK-093

we measure, we calibrate, we validate.
㈜테솔 · www.tessol.com TS-TL-FLK-093 36 / 214
KOLAS 국제공인교정기관 · ISO/IEC 17025

Note

PC-7200 gas operated, liquid lubricated piston-cylinder modules can be operated in gas oil filled with oil and operated in oil. Oil operation of PC-7202 modules is not recommended for routine operation. It can be useful in very specific crossfloating circumstances, particularly when establishing a calibration link between independent gas operated and oil operated piston gauges. When switching PC-7200 module between oil and gas and oil operation, see Section 5.3.3 for information on emptying excess oil from the module.

Switching a PG7202 from gas to oil operation

Note

Only the high pressure PC-7300 oil modules may be used in the PG7202 platform (PC-7300-1, -2, -5)

❶ **Disconnect the gas generation/control system from the TEST port.** Disconnect the tube at the DH500 TEST port connection on the back of the PG7202. Loosely install a DH500 plug in the TEST port.

❷ **Connect the oil generation/control system to the DRAIN port.** Connect a tube from the oil generation/control system to the PG7202 DRAIN port and tighten it (torque DH500 glands to 15 Nm (12 ft.lb)).

❸ **Fill the PG7202 mounting post with oil.** Hand tighten the DH500 plug in the TEST port. Use the oil generation/control component to fill the PG7202 mounting post with oil. Fill to the edge of the second step in the mounting post. Place a paper towel under the TEST port plug and loosen the DH500 plug allowing oil to run out until it is at the level of the first step in the mounting post and there is no air in the run off oil. If there is still air in the run off, repeat the operation. After filling the mounting post, tighten the DH500 plug (torque DH500 glands to 15 Nm (12 ft.lb)).

❹ **Install a PC-7300 oil operated piston-cylinder module in the PG7202 platform.** Install the module and purge the air from underneath it (see Section2.3.2).

❺ **Operate with oil as the test medium.** The PG7202 can now be operated with oil as the test medium.

⚠ Caution

The maximum working pressure of the PG7202 platform when used in oil with a PC-7300 module is 200 MPa (30 000 psi). The maximum pressure when using a PC-7200 module is 110 MPa (16 000 psi). Do not exceed this limit.

Switching a PG7202 from oil to gas operation

❶ **Remove the piston-cylinder module.** Disinstall the PC-7300 oil operated piston-cylinder module for the PG7202 platform.

❷ **Disconnect the oil generation/control system from the DRAIN port.** Place a paper towel under the DRAIN port and disconnect the tube to the oil generation/control system. Let all the oil run out of the PG7202 platform.

❸ **Remove the DH500 plug from the TEST port.** Place a paper towel under the TEST port and remove the DH500 plug. Let all the oil run out of the PG7202 platform..

❹ **Install a PC-7200 gas operated, liquid lubricated piston-cylinder module in the PG7202 platform.** Install the piston-cylinder module (see Section 2.3.2).

❺ **Connect the gas generation/control system to the TEST port.** Connect a tube from the oil generation/control system to the PG7202 TEST port and tighten it (torque DH500 glands to 15 Nm (12 ft.lb)).

❻ **Prepurge the oil from the PG7202 mounting post.** Hold a paper towel lightly over the DRAIN port opening. Leaving the drain port open, use the gas generation/control component to flow enough gas through the mounting post to just lift the piston.

© 2011 Fluke Calibration

원문: Fluke Calibration PG7302 메뉴얼(영문) · 제조사 원문 자료입니다. 사양은 제조사 사정에 따라 변경될 수 있습니다.

TS-TL-FLK-093

we measure, we calibrate, we validate. ㈜테솔 · www.tessol.com TS-TL-FLK-093 37 / 214

KOLAS 국제공인교정기관 · ISO/IEC 17025

❼ **Purge the PG7202 mounting post.** Purge the PG7202 mouting post using the standard purging procedure (see Section 5.2.4) and finish by tightening the plug in the DRAIN port.

❽ **Operate with gas as the test medium.** The PG7202 can now be operated with gas as the test medium.

⚠ Caution

The maximum working pressure of the PG7202 platform when used with a PC-7200 module is 110 MPa (16 000 psi). Do not exceed this limit.

2.4 Power Up and Verification

2.4.1 Power UP

Turn the PG7000 power ON by pressing the power ON/OFF switch on the rear panel of the PG Terminal. Observe the PG terminal display as the terminal connects with the PG7000 Platform, tests, initializes and goes to the main run screen (see Section 3.7).

If **<….Searching…..>** displays for more than 5 seconds, the communications between the PG7000 and the PG Terminal are failing. Check that the PG7000 to PG Terminal cable is properly installed.

If PG7000 fails to reach the main run screen, service may be required. Record the sequence of operations and displays observed and contact a Fluke Calibration Authorized Service Provider
(see Table 32).

2.4.2 Check that On-Board Piston-Cylinder Module and Mass Set Information are Correct

PG7000 uses stored piston-cylinder and mass set metrological information to calculate the reference pressures it defines (see Section 3.1). For the pressure values to be correct, the stored metrological information on the piston-cylinder, mass set and mass loading bell must be correct. Before using PG7000 for accurate pressure definition, the validity of the stored information should be verified. This consists of comparing the piston-cylinder, mass set and mass loading bell information stored in PG7000 to the information in the current piston-cylinder and mass set calibration reports.

To verify the PG7000 piston-cylinder, mass set and mass loading bell information, use the piston-cylinder and mass set viewing capabilities accessed by pressing **[SPECIAL]**, **<1PC/MS>** (see Section 3.11.1). Compare all the information contained in the PG7000 piston-cylinder, mass set and mass loading bell files to the information on the current piston-cylinder, mass set and mass loading bell calibration reports.

2.4.3 Set Local Gravity Value

PG7000 uses the value of local acceleration due to gravity (gl) in its calculation of the reference pressure it defines (see Section 3.1). The correct value of local acceleration due to gravity at the site of PG7000 use must be entered. This is accomplished by pressing **[SPECIAL]**, **<6gl>** (see Section 3.11.6) and editing the value of local gravity.

2.4.4 Setup Pressure Equation Variable Input Sources

PG7000 uses many variables in calculating defined pressures. The sources of the variables are determined by the current SETUP file. SETUP files are viewed, created, edited and selected using the SETUP function accessed by pressing **[SETUP]** (see Section 3.10). A factory SETUP file is available and already selected on a new PG7000, but the operator may desire to customize it. The factory setup file assumes that PG7000's internal measurement values will be used whenever possible.

원문: Fluke Calibration PG7302 메뉴얼(영문) · 제조사 원문 자료입니다. 사양은 제조사 사정에 따라 변경될 수 있습니다.

TS-TL-FLK-093

we measure, we calibrate, we validate. ㈜테솔 · www.tessol.com TS-TL-FLK-093 38 / 214

KOLAS 국제공인교정기관 · ISO/IEC 17025

2.4.5 Check Proper Operation of Ambient Condition Measurements

PG7000 automatically measures ambient conditions and uses these conditions in its pressure calculations.

To verify that the ambient condition measurements are operating properly proceed as follows:

- Display current ambient condition readings: Press [AMBIENT]. The ambient conditions run screen is displayed (see Section 3.9.6).
- Verify proper ambient condition readings: Compare the ambient condition values displayed to the actual values of ambient conditions. Refer to the ambient condition measurement specifications when evaluating the ambient readings (see Section 1.2.1.2).

Note

- **The unit of measure in which ambient pressure is displayed is the same as the unit selected by pressing [UNIT] (see Section 3.9.3). Units of measure in which other ambient condition values are expressed cannot be changed.**
- **PG7000 allows the source of ambient condition values used in reference pressure calculations to be specified. The source may be PG7000's on-board measurements, default values or operator entered values. See Section 3.10 for information on specifying the source of ambient condition values used by PG7000 in reference pressure calculations.**

2.4.6 apply pressure to THE piston-cylinder module

Note

This section assumes that the PG7000 system has already been set up, including pressure interconnection (see Section 2.3).

⚠ Caution

Before applying pressure to the PG7000 system, be sure that all pressure vessels and connections are rated for the pressure levels that will be applied and that all connections have been properly tightened.

Continuing with the PG7000 set up and check out requires applying pressure to the piston-cylinder module and floating the piston.

Proceed as follows:

❶ **Turn OFF automated piston rotation (if present) and automated pressure generation (if present).** This will prevent the automated rotation and pressure generation features (if present) from interfering during verification of these features (see Sections 3.9.8 and 3.9.9 for information on automated piston rotation and pressure generation).

❷ **Load mass on the piston.** Install the mass loading bell on the piston. Then load the *make up* mass (9, 4.5 or 4 kg depending on the mass set) (see Section 2.3.1.3). If the PG7000 platform is equipped with AMH automated mass handling, press **[ENTER]** and enter a low value of pressure or mass to cause mass to be loaded onto the piston.

❸ **Float the piston.** Use the pressure generation/control component of the PG7000 system to apply pressure under the piston through the PG7000 Platform TEST port. The piston will float at a pressure approximately equal to the piston mass to pressure conversion factor multiplied by the mass load in kg. The piston-cylinder conversion factor is marked on the top of the piston cap and is in either kPa or MPa per kilogram [kPa/kg or MPa/kg].

© 2011 Fluke Calibration

원문: Fluke Calibration PG7302 메뉴얼(영문) · 제조사 원문 자료입니다. 사양은 제조사 사정에 따라 변경될 수 있습니다.

TS-TL-FLK-093

we measure, we calibrate, we validate.
㈜테솔 · www.tessol.com TS-TL-FLK-093 39 / 214
KOLAS 국제공인교정기관 · ISO/IEC 17025

Note

If the piston cannot be floated because it immediately sinks down from a float position, there is a leak in the pressure system. Identify and eliminate leaks until the piston, once floated, falls at a rate less than the nominal fall rate given in the specifications of the piston-cylinder module being used (see Section 1.2.2).

2.4.7 Check Proper Behavior of Motorized Piston Rotation

The motorized rotation feature can be set to engage and disengage automatically as needed to maintain the floating piston rotating within a set rotation rate range when floating, and to stop rotation before mass manipulation to set a different pressure occurs (see Section 3.9.8). Motorized piston rotation can also be activated manually by pressing **[↻]**. Stopping piston rotation can be activated by pressing and holding **[↻]** and then pressing **[←]** (see Section 3.9.13).

Turn automated rotation OFF by pressing **[ROTATE]** and selecting **<1off>**. Load at least the mass bell on the piston, float the piston and press **[↻]**. When the piston is floating, the motorized rotation system should engage and cause the mass bell and piston to begin rotating. Within 5 to 30 seconds, depending on the mass load, the rotation rate should reach 80 rpm for PG7601 or about 50 rpm for PG7102 or PG7302. Current rotation rate can be observed by pressing **[SYSTEM]** (see Section 3.9.5).

2.4.8 Check Proper Operation of Piston Behavior Measurements

Float the piston and rotate it (see Sections 2.4.6 and 2.4.7).

Press **[SYSTEM]** once to reach the first SYSTEM run screen. Verify that the piston position, piston fall/rise rate, piston rotation rate and piston rotation decay rate are indicating correctly (see Section 3.9.5). The piston position reading system may be calibrated using an on-board procedure if necessary (see Section 5.2.2). Calibration of piston position is recommended when installing a new PG7000 and regularly after installation.

Press **[SYSTEM]** again to reach the second SYSTEM run screen. Verify that the piston-cylinder temperature and temperature rate of change are indicating correctly (see Section 3.9.5). If checking a PG7601 Platform, verify that the vacuum reference measurement is operating correctly (see Section 2.4.8.1).

2.4.8.1 Verify Vacuum Reference (PG7601 Only)

PG7601 includes provisions for establishing and measuring a vacuum reference.

To verify the vacuum reference capability:

❶ Install a piston-cylinder module (see Section 2.3.2).

❷ Install the bell jar on the PG7601 Platform (the bell jar aligns on the PG7601 vacuum plate and seals itself). If using AMH-38 automated mass handling, install the AMH-38 mass handler (see the AMH-38/AMH-100 Operation and Maintenance Manual).

❸ Apply a vacuum through the reference vacuum port (KF25 port on front left side of platform or KF40 if using the optional AMH-38 automated mass handler).

❹ Press **[SYSTEM]** twice to observe the value of vacuum read by the PG7601's built-in vacuum gauge.

If a vacuum pump of adequate capacity has been correctly connected to the reference vacuum port, the vacuum read by the PG7601 built-in vacuum gauge should go to 4 Pascal [Pa] or lower in less than five minutes on the first pump down and two to three minutes on immediately subsequent pump downs.

원문: Fluke Calibration PG7302 메뉴얼(영문) · 제조사 원문 자료입니다. 사양은 제조사 사정에 따라 변경될 수 있습니다.

If this performance is NOT achieved:

- The vacuum pump may be inadequate.
- The connection of the vacuum pump to the PG7601 platform of AMH-38 may have leaks or excessive restrictions.
- The PG7601 built-in vacuum gauge or external vacuum gauge may be incorrect.
- There may be a leak in the PG7601.

2.4.9 Check Automated Pressure Generation (If Present)

⚠ Caution

Before applying pressure to the PG7000 system, be sure that all pressure vessels and connections are rated for the pressure levels that will be applied and that all connections have been properly tightened.

To check automated pressure generation/control:

❶ Verify that the automated pressure generation/control component is properly connected to the system (see Section 2.3.1.2).

❷ When operation has returned to the main run screen, turn ON automated pressure generation control, if available, by pressing **[GEN]** and selecting **<1on>** (see Section 3.9.9).

❸ Press **[P OR M]**, **<1pressure>** to select *pressure entry mode* (see Section 3.9.12). Press **[ENTER]** and enter a pressure value to be generated and follow the mass loading instruction (see Section 3.6).

❹ Verify the pressure generation/control component properly generates pressure and floats the PG7000 piston.

2.4.10 Check/Set Security Level

PG7000 has a security system based on User Levels. By default, the security system is set to **low** and NO password is required to change the security level. See Section 3.11.4.5 for information on the security system. As part of the PG7000 startup, set your desired security level and a password.

⚠ Caution

PG7000 is delivered with the security level set to low to avoid inadvertent altering of critical internal settings but with access to changing security levels unrestricted. It is recommended that the low security level be maintained at all times and password protection be implemented if control over setting of security levels is desired.

2.4.11 Additional Precautions to Take Before Making Pressure Measurements

Before using PG7000 to make accurate pressure measurements, consider the following:

- Select/activate the correct piston-cylinder module, mass set and mass loading bell (see Sections 3.9.2, 3.11.1.10, 3.11.1.15).
- If using an automated pressure generation/control component with automated pressure generation, set the pressure controller's upper limit (UL) (see Section 3.9.9.3).
- Enter the correct value of local gravity at the site of use (see Section 3.11.6).
- Consider head corrections (see Sections 3.9.7 and 3.11.3).
- Level the PG7000 Platform properly (see Section 2.3.1.1).

© 2011 Fluke Calibration

원문: Fluke Calibration PG7302 메뉴얼(영문) · 제조사 원문 자료입니다. 사양은 제조사 사정에 따라 변경될 수 있습니다.

we measure, we calibrate, we validate.
㈜테솔 · www.tessol.com TS-TL-FLK-093 41 / 214
KOLAS 국제공인교정기관 · ISO/IEC 17025

TS-TL-FLK-093

- Select the correct pressure unit of measure and measurement mode (see Sections 3.9.3 and 3.9.5).
- Verify that the settings for the sources of variables to be used by PG7000 in its calculations of reference pressures are those desired (see Section 3.10).
- Verify that the piston-cylinder module is correctly cleaned and operating properly (see Section 5.3).
- PG7202 only: Ensure that the piston-cylinder module liquid reservoir is filled (see Section 5.3.3).
- Verify that there are NO leaks in the pressure system.

2.5 Short Term Storage

The following is recommended for short term storage of PG7000.

❶ Remove all masses from the PG7000 Platform (manual mass set only).

❷ Vent all circuits to atmosphere.

❸ Turn OFF power using the power switch on the rear of the PG7000 Terminal.

❹ Cover the PG7000 Platform and mass set with the dust covers included in the platform and mass set accessories (not used with AMH mass handling system).

원문: Fluke Calibration PG7302 메뉴얼(영문) · 제조사 원문 자료입니다. 사양은 제조사 사정에 따라 변경될 수 있습니다.

3. General Operation

3.1 Fundamental Operating Principles

PG7000s operate on the principle of the piston gauge in which pressure is defined by balancing it against a known force on a known area (see Figure 5). The known area is defined by a vertically mounted piston rotating in a cylinder and the known force is applied to the piston by loading it with known mass subjected to acceleration due to gravity. When the force applied by the pressure and the force applied by the mass accelerated by gravity are in equilibrium, the piston floats and the pressure under the piston remains constant. The pressure can be calculated following the equation in Figure 5 (see also, Section 7.2). Generally, the pressurized fluid under the piston also lubricates the gap between the piston and the cylinder. PG7202 uses a unique gas operated, liquid lubricated piston-cylinder (see Section 3.1.1).

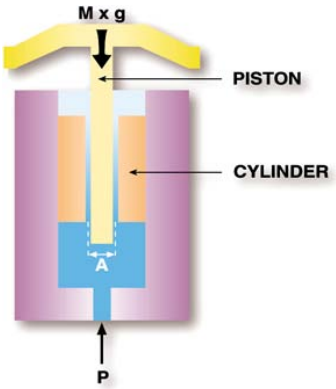

$$P = \frac{\sum_i M_i g_l \left(1 - \frac{\rho_a}{\rho_m}\right) + \pi D \tau}{A_{(T_r, P_r)} \left[1 + (\alpha_p + \alpha_c)(T - T_r)\right](1 + \lambda P)} - \rho_r g_l h$$

Figure 5. Piston Gauge Operating Principle

The PG7000 Platform is designed to mount a variety of piston-cylinder sizes, allow pressure to be applied under the piston and allow masses to be loaded on top of the piston. There are different PG7000 models depending upon whether the pressure medium is oil or gas and whether a vacuum reference is needed.

The measurement uncertainty in the pressure defined by the piston gauge depends on the uncertainty in the effective area of the piston-cylinder and the force applied by the mass accelerated by gravity. PG7000 stores the calibrated values of the piston-cylinders and masses it uses in on-board files (see Section 3.11.1). To determine the effective area of the piston-cylinder and the force applied by the masses under actual operating conditions, a number of influences on these values must be quantified and taken into consideration. For this reason, PG7000 includes extensive features to monitor the behavior and conditions of the piston-cylinder as well as ambient conditions that affect pressure definition (see Sections 3.9.5 and 3.9.6). PG7000 uses the piston-cylinder, mass and ambient condition information to calculate the pressure defined by a given mass load or the mass load needed to define a given pressure (see Section 7.2). The source of each value used by PG7000 in its calculations can be selected by the user between PG7000's internal measurements, default values or user entered values. These sources are defined in SETUP files (see Section 3.10).

 © 2011 Fluke Calibration

원문: Fluke Calibration PG7302 메뉴얼(영문) · 제조사 원문 자료입니다. 사양은 제조사 사정에 따라 변경될 수 있습니다.

Once PG7000 has been set up, it is used in day-to-day operation either to define pressures applied to a device or system under test or to measure a stable pressure. To interface with the PG Terminal, the operator:

❶ Selects the appropriate piston-cylinder to cover the pressure range (see Section 3.11.1.5).

❷ Selects the desired pressure unit of measure (see Section 3.9.3).

❸ Selects the desired pressure measurement mode (gauge, absolute, differential) (see Section 3.9.4).

❹ Sets the head difference between the PG7000 and the device under test (see Section 3.9.7).

❺ Selects *mass to pressure* or *pressure to mass* operating mode (see Section 3.9.12).

❻ Enters a pressure to define or a current mass load to calculate (see Section 3.9.11.1 and 3.9.11.2).

❼ Loads masses by hand or with optional AMH automated mass handler, floats piston and defines pressure.

3.1.1 Gas Operated, Liquid Lubricated Piston-Cylinder Operating Principle (PG7202)

PG7202 provides very high pressure gas pressure operation using a unique gas operated, liquid lubricated piston-cylinder system.

The principle of operation of the gas operated, liquid lubricated piston-cylinder is simple but very effective (see Figure 6). The measured gas pressure, Pg, is applied to the bottom of the piston and to the top of a liquid reservoir located around the cylinder. The reservoir is connected to the gap between the piston and the cylinder through lateral holes near the bottom of the cylinder, allowing liquid from the reservoir to enter the gap. The pressure of the liquid in the gap, Pl, is equal to the gas pressure Pg, plus the liquid head, h. Therefore, the liquid pressure in the gap is always higher than the gas pressure by the amount of the liquid head regardless of the gas pressure value. Since h is small and the space between the piston and cylinder is typically < 1 micron, the bleed of liquid from the bottom of the cylinder towards the gas pressure is extremely small. The mounting post of the 7202 piston gauge is configured so this minute amount of liquid drops directly into a sump that is deadened (see Section 5.2.4, 3.1.1) and not in the flow path of test gas into and out of the system. Though molecules of the liquid may migrate through the gas, no significant contamination of the test system occurs. Because the liquid reservoir is contained in the piston-cylinder module, piston-cylinders can be removed and installed in the PG7202 piston gauge platform with no loss of liquid from the reservoir. All PC-7200 piston-cylinder modules can be delivered using Krytox, a fluorinated synthetic fluid, to lubricate the piston-cylinder in applications where the system must remain perfectly free of hydrocarbons (e.g. when calibrating instrumentation for oxygen service).

Note

PC-7200 gas operated, liquid lubricated piston-cylinder modules are delivered with their lubricating liquid reservoir drained. The reservoir must be filled prior to using the piston-cylinder module and then regularly when used (see Section 5.3.3)

원문: Fluke Calibration PG7302 메뉴얼(영문) · 제조사 원문 자료입니다. 사양은 제조사 사정에 따라 변경될 수 있습니다.

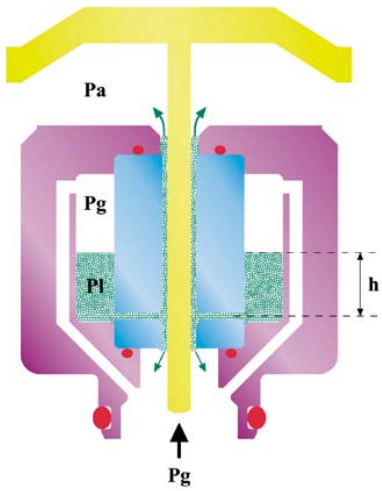

Figure 6. Gas Operated, Liquid Lubricated Piston-Cylinder (PC-7200) Operating Principle

3.2 Keypad Layout And Protocol

PG7000 has a 4 x 4 keypad for local operator access to direct functions, function menus and for data entry.

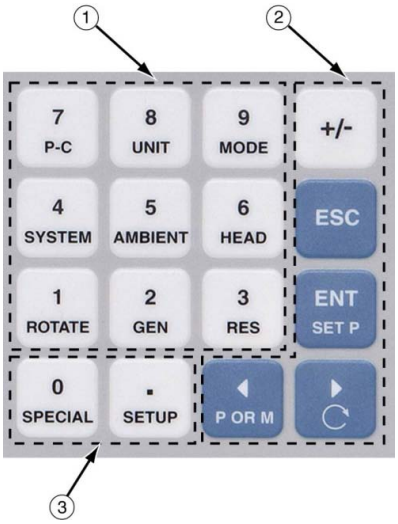

① The **Function/Data keys** allow very commonly used functions to be accessed directly from the main run screen by a single keystroke. The name of the function is on the bottom half of the key (see Section 3.9.1). These keys enter numerical values when editing.

② The **Editing and Execution keys** are for execution, suspending execution, backing up in menus and editing entries.

③ The **Menu/Data keys** provide access to function menus from the main run screen. The menu name is on the bottom half of the key. The SETUP menu is for more frequently used functions. The SPECIAL menu is for functions that are NOT generally used as a part of day to day operation. These keys enter numerical values when editing.

Figure 7. PG7000 Keypad Layout

Key press confirmation is provided by both tactile and audible feedback. A single beep confirms a valid entry. A descending two note tone signals an invalid entry. The audible valid entry feedback can be suppressed or modified by pressing **[SPECIAL]** and selecting **<5prefs>, <2sound>** (see Section 3.11.4.2).

Pressing the **[ENTER/SET P]** key generally causes execution or forward movement in the menu tree. **[ENTER/SET P]** is also used to enter a command to set a pressure.

Pressing the **[ESCAPE]** key generally allows movement back in the menu tree and/or causes execution to cease or suspend without changes being implemented. Pressing **[ESCAPE]** repeatedly eventually returns to the main run screen. From the main run screen, pressing **[ESCAPE]** allows momentary viewing of the PG7000 identification screen.

© 2011 Fluke Calibration

원문: Fluke Calibration PG7302 메뉴얼(영문) · 제조사 원문 자료입니다. 사양은 제조사 사정에 따라 변경될 수 있습니다.

we measure, we calibrate, we validate.
㈜테솔 · www.tessol.com TS-TL-FLK-093 45 / 214
KOLAS 국제공인교정기관 · ISO/IEC 17025

TESSOL Technical Library
TS-TL-FLK-093

Pressing the **[+/-]** key changes a numerical sign when editing. It also toggles through multiple screens when available.

Pressing the **[←]** and **[→]** keys when editing allows reverse and forward cursor movement when editing data entry. These keys are also used to scroll through choices.

Menu selections can be made by pressing the number of the selection directly or by pressing **[←]** and **[→]** to place the cursor on the number of the desired selection and pressing **[ENTER]**.

Note

Some screens go beyond the two lines provided by the display. This is indicated by a flashing arrow in the second line of the display. Press [←] and [→] to move the cursor to access the lines that are NOT visible or directly enter the number of the hidden menu choice if you know it.

3.3 Sounds

The PG Terminal is equipped with a variable frequency tone device to provide audible feedback and alarms. Some sounds can be modified and all sounds can be suppressed (see Section 3.11.4.2). Sounds are used for the following indications:

Valid key press	Brief high frequency beep.
Invalid key press	Three rapid, low frequency beeps.
Piston left end of stroke high or low	Three rapid valid key press beeps. Piston was at low stop or high stop and just entered spring zone (see Section 3.5).

3.4 Pressure *Ready/Not Ready* Indication

The three characters on the top line, far left, of the main run screen provide a pressure *Ready/Not Ready* indication. This indication is intended to give the user a clear and objective indication of when PG7000 conditions are such that the value of pressure it is defining is valid and in tolerance. There are three *Ready/Not Ready* indication characters to indicate the status of the three main *Ready/Not Ready* criteria. The *Ready/Not Ready* indication characters are shown on the first line, top left hand side, of the main run screen.

1. Piston position and vertical movement.
2. Piston rotation.
3. Reference vacuum (PG7601 in *absolute by vacuum* measurement mode only).

```
1 2 3
*** 100.4755 kPa g h
+ 0.1 mm 10.00564 kg
```

For each *Ready/Not Ready* indication character, **<*>** indicates a *Ready* condition. Therefore, **<***>** or **<** >** indicates that all conditions necessary for an in tolerance pressure definition are present. Any indication other than **<*>** indicates *Not Ready*.

See Sections 3.4.1, 3.4.2 and 3.4.3 for details on each of the three *Ready/Not Ready* indicating characters.

Note

The criteria used to distinguish between *Ready* and *Not Ready* conditions can be customized by the user (see Sections 3.4.1, 3.4.2, 3.4.3).

3.4.1 Piston Position *Ready*/Not *Ready*

The piston position *Ready/Not Ready* character indicates *Ready* or *Not Ready* based on the position of the piston in its vertical stroke (see Section 3.5) and an automated measure generation status (see Section 3.9.9). This ensures that pressure definitions will be made with the piston not more than a certain distance from mid-float position and that measurements will not be made while the action of an automated pressure controller may influence the pressure.

The piston position *Ready/Not Ready* character is the first character from the left on the top line of the main run screen.

원문: Fluke Calibration PG7302 메뉴얼(영문) · 제조사 원문 자료입니다. 사양은 제조사 사정에 따라 변경될 수 있습니다.

TS-TL-FLK-093

we measure, we calibrate, we validate. ㈜테솔 · www.tessol.com TS-TL-FLK-093 46 / 214

KOLAS 국제공인교정기관 · ISO/IEC 17025

The piston position *Ready/Not Ready* criterion is determined by the current SETUP file and can be customized by the user (see Section 3.10).

Piston position *Ready/Not Ready* character indications include:

<*> **Piston position *Ready*** (within the position limits specified in the current SETUP file) (see Section 3.5).

<↓> **Piston position *Not Ready*, low** (below the position limits specified in the current SETUP file, see Section 3.10). The **<↓>** flashes if the piston is not at the bottom stop position to alert the user that this indicator is *Not Ready*.

<↑> **Piston position *Not Ready*, high** (above the position limits specified in the current SETUP file) (see Section 3.10). The **<↑>** flashes if the piston is not at the top stop position to alert the user that this indicator is *Not Ready*.

<?> **Piston position not known** (current specified mass load is less than the load of the piston + bell). The bell must be installed for PG7000 piston position measurement to operate correctly so piston position values shown are not valid when the bell is not installed.

<T> **Tare PG7000 is *Not Ready* (PG7102 and PG7202 only).** Indicates that piston position or rotation rate is *Not Ready* on the tare PG7000 in high line differential mode (see Section 3.9.4.2).

Note

- **Piston position always indicates *Not Ready* if automated pressure generation is adjusting pressure, regardless of actual piston position.**
- **In PG7102 and PG7202 high line differential pressure mode (see Section 3.9.4.2), the piston position *Ready/Not Ready* indicator applies to the pistons of both the tare and the reference PG7000. For *Ready* to be indicated, both pistons must be within the ready limits for piston position.**

3.4.2 Piston Rotation *Ready/Not Ready*

The piston rotation *Ready/Not Ready* character indicates *Ready* or *Not Ready* based on the rotation rate of the piston.

The piston rotation *Ready/Not Ready* character is the second character from the left on the top line of the main run screen.

The piston rotation rate *Ready/Not Ready* criterion is specific to the currently active piston-cylinder module and can be edited by the user (see Sections 3.11.1.1).

Piston rotation rate *Ready/Not Ready* character indications include:

<*> **Rotation rate *Ready:*** Rotation rate is within the rotation rate limits specified in the current piston-cylinder module file) (see Section 3.11.1.1).

<<> **Rotation rate *Not Ready,* low:** Rotation rate is less than the lower rotation rate limit specified in the current piston-cylinder module file (see Section 3.11.1.1) or motorized rotation system is currently engaged. Note that the low rotation limit is automatically reduced when the mass loaded on the piston is less than 3 kg. The **<<>** flashes if the piston is floating to alert the user that this indicator is *Not Ready*.

<?> **Rotation rate not known:** Current specified mass load is less than the load of the (piston + bell). The bell must be installed for PG7000 piston rotation rate measurement to operate correctly so piston rotation rate cannot be measured when the bell is not installed.

© 2011 Fluke Calibration

원문: Fluke Calibration PG7302 메뉴얼(영문) · 제조사 원문 자료입니다. 사양은 제조사 사정에 따라 변경될 수 있습니다.

we measure, we calibrate, we validate. ㈜테솔 · www.tessol.com TS-TL-FLK-093 47 / 214
KOLAS 국제공인교정기관 · ISO/IEC 17025

TESSOL Technical Library TS-TL-FLK-093

Note

At mass loads less then 3 kg the low rotation limit is automatically reduced to an operational minimum to maximize free rotation time.

In PG7102 and PG7202 high line differential pressure mode (see Section 3.9.4.2), the piston rotation rate *Ready/Not Ready* indicator applies to the pistons of both the tare and the reference PG7000. For *Ready* to be indicated, both pistons must be within the ready limits for piston rotation rate.

3.4.3 Vacuum Reference *Ready/Not Ready* (PG7601 Only)

The vacuum reference *Ready/Not Ready* character is only used with PG7601, as it is the only PG7000 model with vacuum reference capability. It is only active when operating in *absolute by vacuum* mode (see Section 3.9.4).

The vacuum reference *Ready/Not Ready* character indicates *Ready* or *Not Ready* based on the value of reference vacuum when making measurements in *absolute by vacuum* mode. This ensures that definitions of absolute pressure with a vacuum reference will be made with the vacuum under the PG7601 bell jar lower than a specified value. When the vacuum is not low enough, vacuum measurement errors may be excessive.

The vacuum reference *Ready/Not Ready* character is the third character from the left on the top line of the main run screen.

The vacuum reference *Ready/Not Ready* criterion is determined by the current SETUP file and can be customized by the user (see Section 3.10). The vacuum reference criterion is a fixed value that can be customized by the user when the vacuum reference selection in the SETUP file is *internal*. If the selection in the SETUP file is NOT *internal*, the vacuum reference *Ready/Not Ready* character always indicates *Ready* and the value cannot be customized.

Vacuum reference *Ready/Not Ready* character indications include:

< > **(Blank) Vacuum reference *Ready/Not Ready* is not in use.** This is not a PG7601; or if PG7601, current measurement mode is not *absolute by vacuum*.

<*> **Vacuum reference *Ready.*** Vacuum value is below limit specified in the current SETUP file if source is *internal* OR source is *default* or *user* and the vacuum value is not a measured value (see Section 3.10).

< > > **Vacuum reference *Not Ready.*** Current SETUP file source for vacuum is internal and vacuum value is above the limit specified (see Section 3.10). The **<>>** flashes if the piston is floating to alert the user that this indicator is *Not Ready*.

3.5 Piston Position

When operating a PG7000 piston gauge, reference pressure values are defined by loading known mass values on the piston and adjusting the pressure to float the piston. Piston position is measured and displayed real time on the MAIN run screen (see Section 3.7) and in the first SYSTEM run screen (see Section 3.9.5). Piston position is used as a criterion for the *Ready/Not Ready* indication as valid measurements can only be made when the piston is in the correct position (see Section 3.4.1).

The full piston stroke is ± 4.5 mm from the midstroke position. The stroke is divided into different positions and zones as illustrated in Figure 8. These zones are:

- **High and low stops:** The piston is at the minimum or maximum end of stroke. The pressure applied to the piston is higher (at high stop) or lower (at low stop) than that corresponding to the mass loaded on the piston. The high and low stop positions are fixed.
- **High and low spring zones:** The combination of pressure and the force of the high or low stop springs have caused the piston to leave the stop. The pressure applied to the piston is within the equivalent of 2 kg of the pressure corresponding to the mass loaded on the piston. The high and low spring zones indicate the piston is **about to float**. The spring zone positions are fixed.

원문: Fluke Calibration PG7302 메뉴얼(영문) · 제조사 원문 자료입니다. 사양은 제조사 사정에 따라 변경될 수 있습니다.

TS-TL-FLK-093

we measure, we calibrate, we validate. ㈜테솔 · www.tessol.com TS-TL-FLK-093 48 / 214

KOLAS 국제공인교정기관 · ISO/IEC 17025

- **High and low measurement zones:** The piston is within the zone in which a *Ready* measurement can be made (see Section 3.4.1). The pressure applied to the piston is the pressure corresponding to the mass loaded on the piston. The default value of the high and low measurement zones is ± 2.5 mm around midstroke position. This value can be adjusted in the SETUP file (see Section 3.10).
- **Midstroke:** The piston is at the middle of its stroke. The bottom of the piston (or its equivalent for hollow pistons) is at the reference level marked on the mounting post (see Section 3.9.7). There is equal stroke available to the high and low stops.

Note

The piston position monitoring system is driven by the internal ring in the base of the mass loading bell. When the bell is not installed, piston position cannot be measured. If the current mass load is less than the mass of the piston + bell, PG7000 will display < ---- > where piston position is normally displayed. If the current mass load is greater than the mass of the piston + bell but the bell is not actually installed, the piston position indication is not valid.

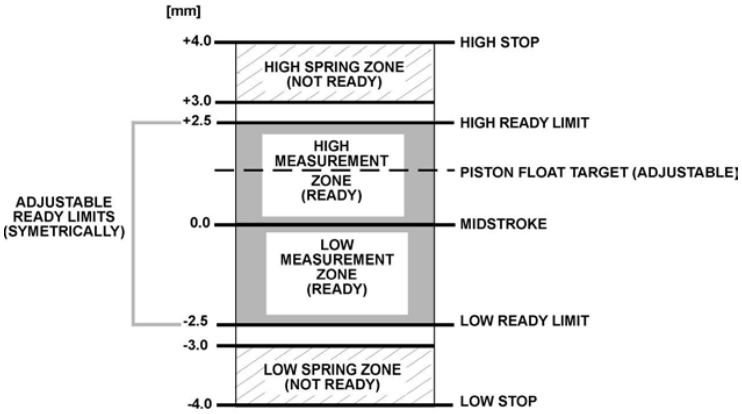

Figure 8. Piston Stroke and Zones

3.6 Mass Loading Protocol

❍ PURPOSE

To provide the operator with mass loading instructions and allow mass entry in convenient nominal values which PG7000 can accurately convert to measured mass values to determine the actual mass load.

❍ PRINCIPLE

All PG7000 manual mass set masses of 0.1 kg and above, including those in the mass set, the mass loading bell and the piston assembly, are adjusted so that their true mass is within ± 20 ppm of their **nominal value**. The **nominal value** is marked on each mass. Each mass's **actual individual value** is measured more accurately than ± 20 ppm and reported in the mass set, mass loading bell or piston-cylinder module calibration report. These measured **actual values** are used by PG7000 in all of its defined pressure calculations. The **nominal mass values**, and the sequential numbers of the **nominal masses** when there are several of the same value, are used by PG7000 to describe the mass to load or the mass that is loaded. Following a few simple mass loading rules allows PG7000 to accurately transform **actual mass values** into **nominal mass values** and vice-versa so that mass loading instructions to the operator and the operator mass entries can be made in simple **nominal mass instructions** while representing **actual individual mass values.**

Since the **nominal mass values** written on the masses and the **actual values** of the individual masses are different, in *pressure to mass* mode (see Section 3.9.12) the **actual mass value** loaded on the piston will be different from the mass loading instruction. In the same manner, *in mass to pressure* mode the **nominal value** of the mass load that the operator enters is different from the **actual mass** loaded on the piston. The mass value shown in the MAIN run screen (see Section 3.7) is always the **actual mass value**. The mass loading instruction given in *pressure to mass* mode and the mass value

© 2011 Fluke Calibration

원문: Fluke Calibration PG7302 메뉴얼(영문) · 제조사 원문 자료입니다. 사양은 제조사 사정에 따라 변경될 수 있습니다.

TESSOL Technical Library
TS-TL-FLK-093
we measure, we calibrate, we validate.
㈜테솔 · www.tessol.com TS-TL-FLK-093 49 / 214
KOLAS 국제공인교정기관 · ISO/IEC 17025

entered by the operator in *mass to pressure mode* is always the **nominal mass value**. If PG7000 mass loading protocol is followed, the conversion from **nominal mass** to **actual mass** occurs correctly allowing very simple nominal mass loading and accounting for the operator while using very accurate measured mass values for metrological calculations.

❍ **OPERATION**

Note

To avoid wear to masses and to the piston-cylinder module end of stroke stops, the piston should not be rotating when masses are loaded or unloaded. Before loading masses, stop piston rotation by hand or using the motorized rotation system (see Section 3.9.13).

PG7000 instructions to the operator of mass to load, and operator entries of the mass that is loaded, are always expressed in terms of nominal mass within 0.1 kg and in terms of grams for values under 0.1 kg. This protocol is also followed when using the AMH automated mass handler.

In *pressure to mass* mode, the instruction of the mass to load to achieve the requested pressure is formatted:

```
Load nominal mass:
kkk.k kg and gg.gg g
```

In *mass to pressure* mode, the entry of the mass currently loaded on the piston is formatted:

```
Nominal mass load:
kkk.k kg and gg.gg g
```

kkk.k and *gg.gg* must be expressed and loaded following the mass loading rules below:

Mass Loading Rules

See Sections 2.3.1.3, Installing Masses On The Mass Loading Tray and 3.6. for PG7000 mass set principles and protocol information. Refer to display examples immediately above to identify *kkk.k* and *gg.gg*. See **EXAMPLES: Mass Loading** below for mass loading examples.

PG7000 mass loading entries and instructions are always formatted:

kkk.k kg and nn.nn g

- The mass set being used must be selected as the active mass set (see Section 3.11.1.10) and must be properly set up prior to use (see Section 3.11.1.6).
- kkk.k is made up of the piston, the mass loading bell and mass set masses of 0.1 kg and greater. When using an AMH mass set, the binary mass carrier and mass lifting shaft are also included.
- kkk.k always includes the mass loading bell and then the makeup mass, if possible.
- kkk.k is made up of the largest masses possible rather than a combination of smaller masses.

  EXAMPLE: To load 5 kg on a PG7601:

  ❶ USE the piston (0.2 kg) + the mass loading bell (0.3 kg) + the 4.5 kg makeup mass.

  ❷ DO NOT USE the piston + the mass loading bell + 2 kg #1 + 2 kg #2 + 0.5 kg #1.

When several masses of the same nominal value are included in *kkk.k*, they are loaded in numerical sequence, low to high.

EXAMPLE: When loading three 5 kg masses:

❶ USE 5 kg mass #1, #2 and #3.

❷ DO NOT USE 5 kg mass #4, #3, #1.

This rule will be followed automatically if masses are installed and used as described in Section 3.6.

- *gg.gg* is made up of mass from the gram trim mass set (masses of 50 g to 0.01 g). These masses can be loaded in any order.

원문: Fluke Calibration PG7302 메뉴얼(영문) · 제조사 원문 자료입니다. 사양은 제조사 사정에 따라 변경될 수 있습니다.

TS-TL-FLK-093

we measure, we calibrate, we validate. ㈜테솔 · www.tessol.com TS-TL-FLK-093 50 / 214

KOLAS 국제공인교정기관 · ISO/IEC 17025

⚠ Caution

When PG7000 provides mass loading instructions and calculates the true mass of the mass currently loaded, it assumes that the mass set in use has been set up correctly (see Section 2.3.1.3). For PG7000 mass loading protocol to operate properly, the mass set in use must be EXACTLY the mass set that has been defined by the add and/or edit mass function (see Section 3.11.1.6).

Note

In PG7102 and PG7202 High Line Differential mode (see Section 3.9.4.2), there are two types of mass loading instructions: line pressure setting and differential pressure setting. Both follow conventional PG7000 mass loading protocol. The line pressure mass instructions are always given with 0.1 kg resolution. This is to preserve the smaller masses for setting the differential pressure. The differential pressure mass loading instructions follow conventional mass loading protocol using the masses that remain after the line pressure has been set. It may be necessary to adjust the line pressure value to assure that adequate masses remain to set the desired differential pressure. For example, if the line pressure requires loading 10.6 kg, the 0.5 and 0.1 kg masses will be used to set the line pressure and will not be available if they are needed to set the differential pressure. If this situation occurs, consider adjusting the line pressure so that it is set using a whole number of kilograms, in this example 10.0 or 11.0 kg.

EXAMPLES: Manual Mass Loading

- Mass loading instruction using a PG7601 and a 35 kg mass set:

  12.3 kg and 32.33 g

  Load:

  ❶ piston (0.2 kg) ➔
  ❷ bell (0.3 kg) ➔
  ❸ 4.5 kg #1 (makeup mass) ➔
  ❹ 5 kg #1
  ❺ 2 kg #1
  ❻ 0.2 kg #1
  ❼ 0.1 kg #1
  ❽ 32.33 g from trim mass set

- Mass loading instruction using PG7302 and an 80 kg mass set:

  77.6 kg and 10.45 g

  Load:

  ❶ piston (0.2 kg)
  ❷ bell (0.8 kg)
  ❸ 9 kg #1 (makeup mass)
  ❹ 10 kg #1 through #6
  ❺ 5 kg #1
  ❻ 2 kg #1
  ❼ 0.5 kg #1
  ❽ 0.1 kg #1
  ❾ 10.45 g from trim mass set

© 2011 Fluke Calibration

원문: Fluke Calibration PG7302 메뉴얼(영문) · 제조사 원문 자료입니다. 사양은 제조사 사정에 따라 변경될 수 있습니다.

we measure, we calibrate, we validate.
㈜테솔 · www.tessol.com TS-TL-FLK-093 51 / 214
KOLAS 국제공인교정기관 · ISO/IEC 17025

TS-TL-FLK-093

3.7 Main Run Screen

The PG7000 main run screen is its home display that is reached upon powering up and from which other functions and menus are accessed. It is the top level of all menu structures.

The main run screen is where PG7000 is left in normal operation. It displays the pressure defined by PG7000, *Ready/Not Ready* condition and a variety of other information.

Note

The screen described below is called the MAIN run screen. The SYSTEM and AMBIENT screens (see Sections 3.9.5 and 3.9.6) are also run screens in the sense that all the other functions may be accessed directly from them and pressure or mass entries may be made from them. See Section 3.8 for a description of PG7000's main menu/function structure.

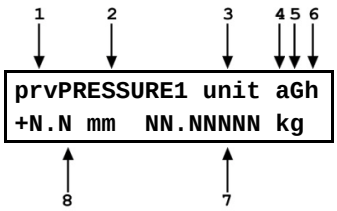

1. **<prv>:** Three Ready/Not Ready indication characters (from left to right: piston position, piston rotation, vacuum reference) (see Section 3.4). Each character indicates as follows:

   <p>: Piston Position Ready/Not Ready. **<*>** when Ready, **<↑> when** Not Ready due to piston above measuring zone, **<↓> when** Not Ready due to piston below measuring zone, **<?>** if piston position not available or out of range. Flashes if condition is Not Ready and piston is floating (see Section 3.4.1). Indicates Not Ready when automated pressure generation is adjusting pressure.

   <r>: Piston Rotation Ready/Not Ready. **<*>** when Ready, **<<> when** Not Ready due to piston rotation rate too low or motorized rotation engaged, **<?>** if piston position not available or out of range. Flashes if condition is Not Ready and piston is floating. (see Section 3.4.2).

   <v>: Vacuum Reference Ready/Not Ready (PG7601 only). **<*>** when Ready, **<v>** if Not Ready due to vacuum not below ready limit. Flashes if condition is Not Ready and piston is floating (see Section 3.4.3).

2. **<PRESSURE1>:** Numerical value and sign of the pressure defined by PG7000 with current mass loaded on current piston when all *Ready/Not Ready* indication characters indicate *Ready.*

3. **<unit>:** Current pressure unit of measure (see Section 3.9.3).

4. Current measurement mode. **<a>** for absolute, **<g>** for gauge, **<d>** for differential or high line differential (see Section 3.9.4).

5. Automated pressure generation status. **<G>** if automated pressure generation is ON. The **<G>** flashes if automated pressure generation is ON and active, blank if automated pressure generation is not ON (see Section 3.9.9).

6. **DUT** head correction status. **<h>** if a head correction is currently being applied, blank if head height is zero (see Section 3.9.7).

7. **<NN.NNNNN kg>:** Current mass load in actual mass (assuming mass loading instructions have been followed and/or mass loading entries are correct (see Section 3.6).

8. **<± N.N mm>:** Current piston position in millimeters from midstroke position. Positive values are above midstroke, negative values below. Indicates **< ---- >** if piston position not available or out of range (see Section 3.5).

Note

- **When a number is too large to display in the allocated screen space, PG7000 displays <********> or <OVERFLOW>.**
- **PG7000 has a screen saver function that causes the display to dim if NO key is pressed for 10 minutes. Pressing a key restores full power to the display. The screen saver activation time can be changed or screen saving can be completely disabled (see Section 3.4.5.1).**

원문: Fluke Calibration PG7302 메뉴얼(영문) · 제조사 원문 자료입니다. 사양은 제조사 사정에 따라 변경될 수 있습니다.

we measure, we calibrate, we validate.
KOLAS 국제공인교정기관 · ISO/IEC 17025
㈜테솔 · www.tessol.com TS-TL-FLK-093 52 / 214
TESSOL Technical Library
TS-TL-FLK-093

3.8 General Function/Menu Flow Chart

Local operator interface with PG7000 is provided by PG Terminal keypad and display. Normal PG7000 operation is organized around run screens from which functions and menus are accessed. The run screens include:

- **MAIN run screen:** Displays *Ready/Not Ready*, defined pressure, piston position and mass load.
- **(2) SYSTEM run screens:** Display piston position, rotation, temperature and reference vacuum (PG7601 only).
- **AMBIENT run screen:** Displays ambient pressure temperature, relative humidity and local gravity.

The flow chart below outlines the operating protocol of the run screens and associated key presses.

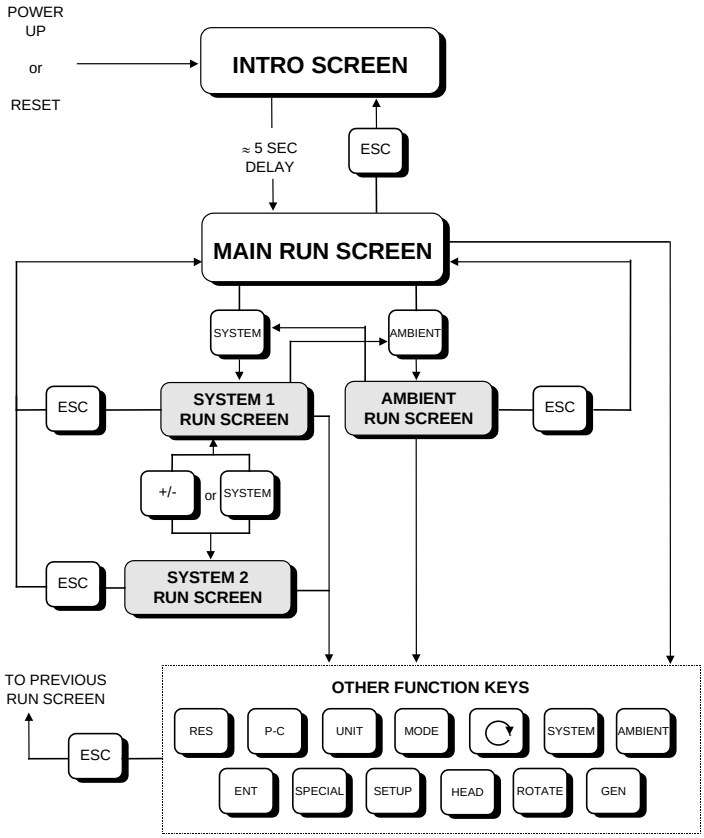

Figure 9. Run Screen Flow Chart

© 2010 Fluke Calibration

원문: Fluke Calibration PG7302 메뉴얼(영문) · 제조사 원문 자료입니다. 사양은 제조사 사정에 따라 변경될 수 있습니다.

we measure, we calibrate, we validate.
KOLAS 국제공인교정기관 · ISO/IEC 17025
㈜테솔 · www.tessol.com TS-TL-FLK-093 53 / 214
TESSOL Technical Library
TS-TL-FLK-093

3.9 Direct Function Keys

3.9.1 Direct Function Keys Summary

Local operator interface with PG7000 is provided by PG Terminal keypad and display. To minimize the use of multi-layered menu structures, the keypad's numerical keys also provide direct access to the most commonly used functions. The function accessed is labeled on the bottom half of the each key. Direct function keys are active whenever PG7000 is in a run screen (MAIN, SYSTEM or AMBIENT). Table 14 summarizes the operation of the direct function keys. Section 3.8 provides a flow chart of PG Terminal general operation. See corresponding manual Sections to 3.9.1 to 3.11.9.

Note

It may be useful to keep a copy of Table 14 near the PG7000, especially when first becoming acquainted with its operation.

Table 14. Summary of PG7000 Direct Function Key Operations

DIRECT FUNCTION KEYS ARE ACTIVE FROM ANY RUN SCREEN (main, ambient, system). See corresponding manual sections for full detail.			
0 SPECIAL	Menu of less frequently used internal functions and settings including resets, user preferences, internal calibration and remote interface setup.	3 RES	Set the resolution of PG7000 mass loading commands (0.01 g to 0.1 kg).
. SETUP	Edit and select files that determine the sources of the values for the variables PG7000 uses in calculations of reference pressures.	4 SYSTEM	Access SYSTEM run screens (2) which display current measurements of piston behavior, piston-cylinder temperature and reference vacuum if present. Toggles between the two screens.
← P OR M	Select pressure to mass or mass to pressure operation.	5 AMBIENT	Access AMBIENT run screen which displays current values of barometric pressure, ambient temperature, ambient humidity and local gravity as specified in the active SETUP file.
→ ↻	Activate motorized control manually. Activates when pressed, deactivates when released.	6 HEAD	Adjust height of DUT fluid head correction. Set to zero to defeat head correction.
ENTER SET P	From a run screen: Access mass or pressure setting commands. From other screens: Select menu choice, enter value, confirm selection.	7 P-C	Select active piston-cylinder module (range).
1 ROTATE	Turn automatic activation of motorized rotation ON/OFF.	8 UNIT	Set unit of measure in which pressures are defined. Choice of units available from this key can be customized.
2 GEN	Turn automated pressure generation/control ON/OFF, adjust control parameters, set upper limit for automated pressure control. Has no effect if an automated pressure generation/control component is not part of the PG7000 system.	9 MODE	Set pressure measurement mode (gauge, absolute, differential).

원문: Fluke Calibration PG7302 메뉴얼(영문) · 제조사 원문 자료입니다. 사양은 제조사 사정에 따라 변경될 수 있습니다.

TS-TL-FLK-093

we measure, we calibrate, we validate.
KOLAS 국제공인교정기관 · ISO/IEC 17025

3.9.2 [P-C]

❍ PURPOSE

To view and/or change the active piston-cylinder module. In most cases, changing the piston-cylinder module is equivalent to changing the range.

Note

- **[P-C] is for selecting the active piston-cylinder module only. Piston-cylinder modules can be added and deleted and their characteristics can be edited by pressing [SPECIAL] and selecting <1PC/MS> (see Section 3.11.1).**
- **The active mass set and mass loading bell are selected by pressing [SPECIAL] and selecting <1PC/MS> (see Section 3.11.1).**

❍ PRINCIPLE

To make valid pressure and mass load calculations, PG7000 must know the exact characteristics of the piston-cylinder module that is currently in use. See Section 7.2 for detailed information on PG7000 pressure and mass calculations.

Most PG7000s are used with more than one piston-cylinder module. Detailed characteristics on up to 18 piston-cylinder modules are stored in files. These files can be added, deleted, viewed and edited by pressing **[SPECIAL]**, **1pc/ms** (see Section 3.11.1).

The P-C function provides rapid access, from any run screen, to viewing the piston-cylinder modules available and selecting one to be active.

❍ OPERATION

Pressing **[P-C]** activates the piston-cylinder module viewing and selecting function. Pressing the **[P-C]** key again or **[+/-]** while in the P-C function steps through displays of available piston-cylinder modules.

When **[P-C]** is first pressed, a summary of the characteristics of the active piston-cylinder module is displayed, for example:

1. Nominal pressure to mass conversion coefficient of the piston-cylinder module that is currently selected (active). This value is calculated from the effective area of the piston-cylinder and is in kPa (if < 1 MPa) or MPa. Upgraded Type 5000 piston-cylinders may be displayed in psi.
2. Serial number of the active piston-cylinder module.
3. Current pressure unit of measure.
4. Nominal pressure in current pressure units resulting from loading all the mass of the active mass set.
5. Nominal pressure in current pressure units resulting from loading the piston and mass bell only.

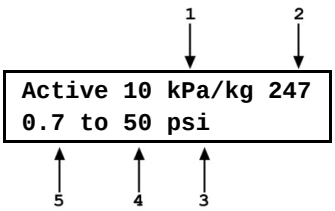

Pressing **[P-C]** again or **[+/-]** causes the screen to step through the other available piston-cylinder modules in the sequence that they were added.

1. Nominal pressure to mass conversion coefficient of the piston-cylinder module. This value is calculated from the effective area of the piston-cylinder and is always in kPa (if < MPa) or MPa.
2. Serial number of the piston-cylinder module.
3. Current pressure unit of measure.
4. Nominal maximum pressure using the piston-cylinder module. Pressure, in current pressure units, resulting from loading all the mass of the active mass set.
5. Nominal minimum pressure using the piston-cylinder module. Pressure, in current pressure units, resulting from loading the piston and mass bell only.

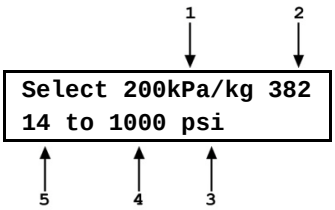

Pressing **[ENTER]** while in the P-C function causes PG7000 to select the currently displayed piston-cylinder module as the active piston-cylinder module.

© 2011 Fluke Calibration

원문: Fluke Calibration PG7302 메뉴얼(영문) · 제조사 원문 자료입니다. 사양은 제조사 사정에 따라 변경될 수 있습니다.

Pressing **[ESCAPE]** while in the P-C function returns to the main run screen without changing piston-cylinder modules.

Note

- **The pressure unit of measure in which the range offered by the piston-cylinder module using the active mass set is displayed can be changed by pressing [UNIT] (see Section 3.9.3).**
- **When the current pressure unit of measure is an altitude unit, piston-cylinder module range is expressed in kPa if the altitude unit is meters (m) or psi if the altitude unit is feet (ft).**

3.9.3 [UNIT]

❍ PURPOSE

To specify the unit of measure in which defined pressures are expressed.

❍ PRINCIPLE

PG7000 supports a wide variety of pressure units of measure. Internally, PG7000 always operates in Pascal [Pa] (the SI unit of pressure). Values of pressure are represented in other units by the application of conversion factors to convert from Pascal. See Section 7.1.1 for Unit of Measure Conversions.

The pressure unit of measure selection (e.g., psi, kPa, etc.) is separate from the pressure measurement mode selection (gauge, absolute or differential). See Section 3.9.4 for information on changing the measurement mode.

❍ OPERATION

To change the pressure unit of measure, press the **[UNIT]** function key from any run screen. The display is (default units depend on model):

```
1kPa 2Mpa 3Pa
4bar 5psi 6kcm2
```

The cursor is on the number corresponding to the active unit. To change the pressure unit, select the desired unit. The display returns to the previous run screen with the selected unit active.

If the pressure unit selected is inWa, the reference temperature for water density must be specified. When inWa is selected as the unit, the next display is:

```
Select inWa ref temp
4°C     20°C     20°F
```

Select the desired reference temperature for water density using the **[←]** or **[→]** key to move the cursor. Pressing **[ENTER]** returns to the main run screen with inWa based on water density at the selected reference temperature as the active pressure unit. The current inWa reference temperature can be viewed by observing the position of the cursor in the reference temperature screen.

Note

- **See Section 7.1 for tables of the pressure unit of measure conversion factors used by PG7000.**
- **The UNIT function provides rapid access to a choice of up to six units. The choice of units can be customized from a wider selection by the user (see Section 3.9.3.1). The default units of the UNIT function depend on the PG7000 model. The default units are:**
- **PG7102 and PG7601: 1kPa 2MPa 3Pa 4bar 5psi 6kcm2**
- **PG7202 and PG7302: 1MPa 2kPa 3bar 4psi 5kcm2**
- **To restore the default UNIT function settings, use the Unit Reset (see Section 3.11.9.2).**

원문: Fluke Calibration PG7302 메뉴얼(영문) · 제조사 원문 자료입니다. 사양은 제조사 사정에 따라 변경될 수 있습니다.

TS-TL-FLK-093

we measure, we calibrate, we validate. ㈜테솔 · www.tessol.com TS-TL-FLK-093 56 / 214

KOLAS 국제공인교정기관 · ISO/IEC 17025

- **Certain internal and/or metrological functions (e.g., vacuum reference pressure) are always represented in Pascal [Pa], regardless of the active pressure unit of measure.**
- **When the current pressure unit of measure is an altitude unit, atmospheric pressure in the AMBIENT run screen is expressed in kPa if the altitude unit is meters (m) or psi if the altitude unit is feet (ft).**

3.9.3.1 Customizing Pressure Units Available Under the UNIT Function

❍ PURPOSE

To customize the selection of pressure units that are available for selection from the **[UNIT]** function key.

❍ PRINCIPLE

The UNIT function provides a choice of different pressure units of measure depending on the PG7000 model. The units that are available by default are those indicated in the Note in Section 3.9.3. However, PG7000 supports many other pressure units of measure. Other units can be made available for selection and units can be deleted by customizing the UNIT function. This allows PG7000 to offer a very wide selection of units while simplifying day to day operation. The typical user will customize the **[UNIT]** function key to support the six most commonly used units.

❍ OPERATION

To customize the **[UNIT]** function key, from the main run screen press **[SETUP]** and select **<2PresU>**. The display is:

1. The UNIT number in the **[UNIT]** menu that is to be changed.

```
                    1
                    ↓
Set up user unit #6
```

Enter the number of the unit position that you would like to change. The display becomes:

```
Unit #6   1SI 2other
3altitude 4user
```

Select the desired pressure unit category. SI units include units *based* on SI such as mmHg. Select the desired unit from the unit list (see Table 15).

Table 15. Pressure Units of Measure Available

<1SI>	<2Other>	<3altitude>*	<4User>**
<1Pa>	<1psi>	<1m>	<1user>
<2Kpa>	<2psf>	<2ft>	
<3MPa>	<3inHg>		
<4mbar>	<4inWa>		
<5bar>	<5kcm2>		
<6mmHg>	<6Torr>		
<7mmWa>	<7mTor>		
	<8none>		

*** <3altitude>:** PG7601 in absolute by vacuum mode only. Not available in PG7102, PG7202 and PG7302.

** **<4user>:** User defined unit. As there are no altitude units on PG7102, PG7202 and PG7302, user is **<3user>**.

© 2011 Fluke Calibration

원문: Fluke Calibration PG7302 메뉴얼(영문) · 제조사 원문 자료입니다. 사양은 제조사 사정에 따라 변경될 수 있습니다.

we measure, we calibrate, we validate.
㈜테솔 · www.tessol.com TS-TL-FLK-093 57 / 214
KOLAS 국제공인교정기관 · ISO/IEC 17025

TS-TL-FLK-093

The UNIT function display is not required to display six units. To delete the current unit from the UNIT screen and show no unit, select **<2other>**, **<6none>** for that unit number.

If **<4user>** was selected, the user unit must be defined. The display is:

1. Entry field.

```
Define user unit:
1.000000 Units/Pa
```

1

Enter the number of user units per Pascal [Pa] in the entry field. Pressing **[ENTER]** defines the user unit and returns to the **<Set up unit #>** screen.

Note

- **See Section 7.1.1 for the pressure unit of measure conversion factors used by PG7000.**
- **The user defined unit can be assigned a user defined label using the UDU remote command (see Section 4.3.4.2).**

3.9.4 [MODE]

❍ PURPOSE

To specify the measurement mode (gauge, absolute, differential) in which PG7000 defines reference pressures.

Note

Pressure measurement mode and unit of measure are not the same thing.
See Section 3.9.3 for information on the pressure unit of measure.

❍ PRINCIPLE

Pressure defined relative to absolute zero or vacuum is generally referred to as *absolute pressure*.

Pressure defined relative to atmospheric pressure is generally referred to as *gauge pressure*, with pressure below atmosphere called *negative gauge pressure*.

Pressure defined relative to another pressure that may be, but is not necessarily atmospheric pressure, is generally referred to as *differential pressure*.

PG7000s (depending on the model) can define absolute, gauge, negative gauge and differential pressures. These are referred to as measurement *modes*.

The specific PG7000 measurement modes are as follows:

- ***gauge***: Defines gauge pressure by leaving the PG7000 mass load open to atmosphere. This measurement mode is supported by all PG7000 models. It does not allow negative gauge pressures. The minimum gauge pressure is the pressure resulting from loading the combined mass of the piston and the bell on piston-cylinder effective area.
- ***absolute by adding atmospheric pressure (absolute by ATM)***: Defines absolute pressure by defining a pressure in the same manner as in *gauge mode* and adding the value of atmospheric pressure measured by a barometer. This measurement mode is supported by all PG7000 models. The barometer can be PG7000's on-board sensor or a remote RS232 barometer. The uncertainty on the value of atmospheric pressure measured by the barometer must be considered but this value can become relatively small as pressure goes up. For example, if using a ± 0.01 % barometer, the added uncertainty at 1 MPa (150 psi) is 10 ppm.

원문: Fluke Calibration PG7302 메뉴얼(영문) · 제조사 원문 자료입니다. 사양은 제조사 사정에 따라 변경될 수 있습니다.

This mode is more convenient and less costly than *absolute by vacuum* since no vacuum reference needs to be established. However, it does not allow absolute pressures under atmosphere and the minimum absolute pressure is atmospheric pressure plus the pressure resulting from loading the combined mass of the piston and the bell on the piston-cylinder effective area.

- ***absolute by vacuum (absolute by vac) (PG7601 only)***: Defines absolute pressure by measuring relative to an evacuated bell jar. This mode is time consuming as the vacuum under the bell jar must be made and broken to adjust the mass load for each pressure to be set. This mode is required for setting absolute pressures under atmospheric pressure and for lowest uncertainty under about 1 MPa (150 psi).
- ***differential (dif) (PG7601 only)***: Defines differential pressures at an absolute static pressure between vacuum and two atmospheres by defining an absolute pressure relative to an evacuated bell jar and subtracting static pressure monitored by a digital pressure indicator. An offsetting technique ensures that only the digital indicator's resolution and very short term repeatability influence the measurement results. Allows positive and negative differential pressure (including gauge pressures) with one common hardware setup. Covers pressures very near and at zero without limitations due to piston-cylinder size and mass loads (see Section 3.9.4.1).
- ***high line differential (HLdif) (PG7102 and PG7202 only)***: Defines differential pressures and at gauge static pressure between the lowest gauge pressure supported by the piston-cylinder and the maximum gauge pressure supported by the piston-cylinder. Requires the use of a PG7202 or PG7102 as the "reference" and a second gas operated PG7000 as the "tare". Differential pressures are defined by setting a common line pressure on both PG7000s and then adding the differential pressure to the reference PG7000 (see Section 3.9.4.2).

❍ **OPERATION**

To change the pressure measurement mode, press **[MODE]** from any run screen. The resulting display depends on the PG7000 Model:

The cursor is on the number corresponding to the current measurement mode.

```
Measurement mode:
1gauge 2abs 3HLdif
```

PG7102, PG7202, PG7302 [MODE] Screen

```
Measurement mode:
1g 2avac 3aatm 4dif
```

PG7601 [MODE] Screen

For PG7102, PG7202 and PG7302, selecting **<2abs>** accesses *absolute by ATM* mode (see **PRINCIPLE** above).

For PG7102, PG7202 and PG7302 selecting **<3HLdif>** accesses *high line differential* mode (see **PRINCIPLE** above and Section 3.9.4.2).

For PG7601, selecting **<2avac>** accesses *absolute by vacuum* mode. Selecting **<3aatm>** accesses *absolute by ATM* mode. Selecting **<4dif>** accesses *differential* mode (see **PRINCIPLE** above and Section 3.9.4.1).

Making a measurement mode selection returns to the previous run screen with the selected mode active.

Note

When using an AMH automated mass handler, be sure to apply drive vacuum to the AMH when switching operation to absolute by vacuum mode (see the AMH-38/AMH-100 Operation and Maintenance Manual).

3.9.4.1 Differential Measurement Mode (PG7601 Only)

❍ **PURPOSE**

To define gauge pressures near and under atmospheric pressure that cannot be covered in conventional gauge mode; to define pressures at a static pressure near atmospheric pressure but other than atmospheric pressure.

© 2011 Fluke Calibration

원문: Fluke Calibration PG7302 메뉴얼(영문) · 제조사 원문 자료입니다. 사양은 제조사 사정에 따라 변경될 수 있습니다.

TESSOL Technical Library
TS-TL-FLK-093

we measure, we calibrate, we validate.
㈜테솔 · www.tessol.com TS-TL-FLK-093 59 / 214
KOLAS 국제공인교정기관 · ISO/IEC 17025

Note

Differential mode operation is only supported by PG7601. Differential mode operation requires that the PG7601 SETUP AtmP selection be for an external barometer connected to COM2 (see Section 3.10, 3.11.5.4). Differential mode operation also requires the PG7000 Differential Mode Interconnections Kit P/N 3070127, which includes the Differential Mode Controller.

❍ PRINCIPLE

Differential mode is designed to allow PG7601 to define pressures which piston gauges have typically not covered or for which they have been difficult to use. This includes positive and negative gauge pressures right around zero, for example ± 2.5 kPa (10 in. H2O); as well as low differential pressures at low absolute static pressures, for example 0 to 2.5 kPa (20 Torr) at 15 kPa absolute (2.2 psia) static pressure.

The principal of differential mode is to define a differential pressure as the difference between an absolute pressure relative to vacuum and a second absolute pressure (the static pressure) measured by a precision Reference Pressure Monitor (RPM). An offsetting procedure "tares" the RPM so that the uncertainty contributed to the differential pressure by the RPM's measurement is a function of the RPM resolution and short term repeatability rather than its absolute accuracy and long term stability.

For differential mode operation, the static pressure is set to the desired value as measured by the RPM (atmospheric pressure for gauge pressure measurements). Then RPM offset at the static pressure is determined by applying the static pressure as defined by the PG7601 following:

$$RPM_{offset} = PGRPM_{start} - RPM_{indicate}$$

Where:

PGRPM$_{start}$	=	Pressure applied by PG7601 to RPM (nominally equal to **RPM**$_{start}$)
RPM$_{indicate}$	=	RPM reading when **PGRPM**$_{start}$ is applied to RPM test port

Once the RPM offset has been determined, differential pressures are defined by subtracting the static pressure measured by the RPM from an absolute pressure defined by the PG7601 following:

$$PG_{dif} = PG_{abs} - RPM_{current} - RPM_{offset}$$

Where:

Pg$_{dif}$	=	Differential pressure defined by PG7601
Pg$_{abs}$	=	Absolute pressure defined by PG7601
RPM$_{current}$	=	Current RPM indication of static pressure
RPM$_{offset}$	=	Disagreement between PG7601 and RPM at the operating static pressure

For differential mode operation, the PG7000 Differential Mode Interconnections Kit should be used to provide the DUT high and low test connections and support the RPM offsetting procedure (see Figure 9 and Section 3.9.4.1). A precision Reference Pressure Monitor, such as a **Dhi** RPM, must be selected for the AtmP source in SETUP (see Section 3.10, 3.11.5.4).

PG7601 differential measurement mode manages the data acquisition and handling to support differential mode operation without operator effort. Differential mode operation requires setting the static pressure at which differential measurements are to be made and regular determination of the RPM offset. These functions are supported under **[MODE]**, **<4dif>**.

원문: Fluke Calibration PG7302 메뉴얼(영문) · 제조사 원문 자료입니다. 사양은 제조사 사정에 따라 변경될 수 있습니다.

we measure, we calibrate, we validate.
㈜테솔 · www.tessol.com TS-TL-FLK-093 60 / 214
KOLAS 국제공인교정기관 · ISO/IEC 17025

TS-TL-FLK-093

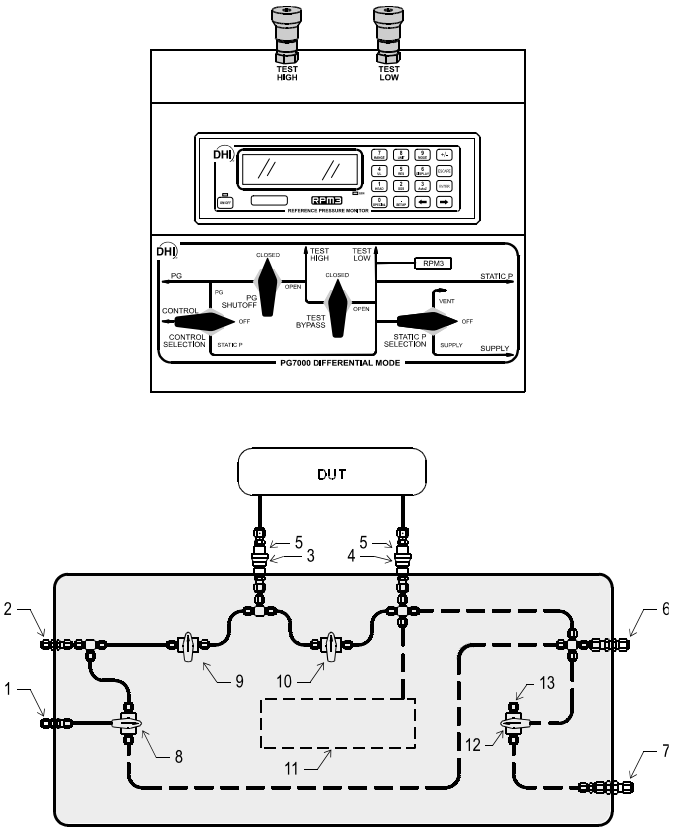

1. PG/STATIC P CONTROL Port
2. PG Port
3. TEST HIGH Port (Quick Connection)
4. TEST LOW Port (Quick Connection)
5. 1/8 in. NPT F or 4T Quick Connector
6. STATIC P Port
7. STATIC P SUPPLY Port
8. CONTROL SELECTION Valve
9. PG SHUTOFF Valve
10. TEST BYPASS Valve
11. Reference Pressure Monitor (RPM) (Optional)
12. STATIC P SELECTION Valve
13. Static Pressure Exhaust (Internal)

Figure 10. Differential Mode Controller Schematic

Note

Technical Note 9940TN02 provides more detailed information on differential mode principles and includes a complete uncertainty analysis. Consult Fluke Calibration or visit www.dhinstruments.com.

❍ OPERATION

To select differential mode operation and access differential mode functions press **[MODE]** and select **<4dif>**.

Differential mode operation includes:

- Selecting differential mode, setting static pressure and finding the RPM offset (see Section 3.9.4.1, Selecting Differential Mode, Setting Static Pressure, Finding RPM Offset (**<1run>**).
- Operating in differential mode (see Section 3.9.4.1, Operating In Differential Mode).
- Viewing differential mode static pressure and RPM offset (see Section 3.9.4.1, Viewing Static Pressure and RPM Offset (**<2view>**).
- Selecting Differential Mode, Setting Static Pressure, Finding RPM Offset (<1run>)

© 2011 Fluke Calibration

원문: Fluke Calibration PG7302 메뉴얼(영문) · 제조사 원문 자료입니다. 사양은 제조사 사정에 따라 변경될 수 있습니다.

Note

To operate in differential mode and/or execute the RPM offset determination procedure, the AtmP selection under SETUP must be external (COM2) (see Section 3.10). If this is not the case, an error message will be displayed (<Dif mode requires COM2 AtmP SETUP>) when attempting to activate differential mode.

To select differential mode operation and/or execute the RPM offset determination procedure, press **[MODE]** and select **<4dif>**, **<1run>**. The display is:

1. Current value of RPM offset. Always in Pascal [Pa].

```
Offset:     9.03 Pa
New offset? 1no 2yes
```

Select **<1no>** to use the existing RPM offset and return the previous run screen in differential mode (see Section 3.9.4.1, Operating in Differential Mode).

Note

The RPM offset should be redetermined any time the static pressure value is changed, as well as at the beginning of each calibration or test sequence. If the difference in the value of the RPM offset in subsequent determinations is < 0.1 Pa, then less frequent offset determinations may be considered.

Select **<2yes>** to proceed with a new determination of the RPM offset (see Section 3.9.4.1, **PRINCIPAL**. The display is:

1. Current pressure reading of the RPM in the current units of.

```
Set RPM P & [ENT]
96.57785 kPa a
```

Table 16. Valve Settings for Setting Differential Mode Static Pressure

VALVE	VALVE SETTING
Control Selection	Static P
PG Shutoff	Closed
Test Bypass	Open
Static P Selection	Off If static pressure is atmospheric pressure VENT or OFF

With the Differential Mode Controller valves (see Figure 9) set as indicated in Table 16 use the system's pressure control component to set the desired static pressure value as read by the RPM.

If the desired static pressure is atmospheric pressure (for example, for low gauge and negative gauge differential pressures), set the STATIC P SELECTION valve to VENT.

If a REFERENCE VOLUME is connected to the STATIC P port and the desired static pressure is less than atmospheric pressure, consider setting the STATIC P SELECTION VALVE to SUPPLY. This will connect the pressure setting vacuum source directly to the reference volume and reduce pull down time.

원문: Fluke Calibration PG7302 메뉴얼(영문) · 제조사 원문 자료입니다. 사양은 제조사 사정에 따라 변경될 수 있습니다.

TS-TL-FLK-093

we measure, we calibrate, we validate. ㈜테솔 · www.tessol.com TS-TL-FLK-093 62 / 214

KOLAS 국제공인교정기관 · ISO/IEC 17025

⚠ Caution

Be sure the TEST BYPASS valve is in the OPEN position before adjusting the static pressure. Failure to do so will cause differential pressure to be generated across the HIGH and LOW TEST ports which may overpressure the DUT.

When the static pressure, as indicated by the RPM, has been set to the desired value, press **[ENTER]**. PG7000 reads the RPM and calculates the mass to load on PG7000 to set the pressure value indicated by the RPM. The display is:

```
Load mass & vac:
9.2 kg & 32.47 g
```

Note

When using an AMH automated mass handler, the mass value to set the value indicated by the RPM is always loaded with resolution of 0.1 kg. This is to avoid having to break the reference vacuum to load trim masses. The differential pressure values are loaded with the resolution specified in [RES] (see Section 3.9.10).

This is the standard nominal mass loading in instruction display of pressure to mass mode (see Section 3.9.11.1). The mass loading instruction is always given with 0.01 g resolution regardless of the current mass loading resolution setting (see Section 3.9.10). Load the mass value following PG7000 mass loading protocol (see Section 3.6). If an AMH-38 automated mass handler is being used, the mass is loaded automatically and default mass loading reasolution of 0.1 kg is used.

Set the PG7000 Differential Mode Controller (see Figure 9) to apply the pressure defined by the PG7000 to the RPM (see Table 17).

Table 17. Valve Settings to Apply PG7000 Pressure to the RPM for Differential Mode Offsetting

VALVE	VALVE SETTING
Control Selection	PG
PG Shutoff	Open
Test Bypass	Open
Static P Selection	Off If static pressure is atmospheric pressure VENT or OFF

Once the valves have been properly set and the mass has been loaded, install the bell jar and establish vacuum under the bell jar. Then press **[ENTER]**. The display is:

1. Current pressure reading of the RPM in the current units of measure.
2. Standard main run screen piston position indication (see Section 3.7).
3. Current RPM offset (pressure applied by PG7000 - RPM indication). Indicates ******* if the value is > 9999.99 Pa. Pressure unit of measure is always Pascal [Pa].

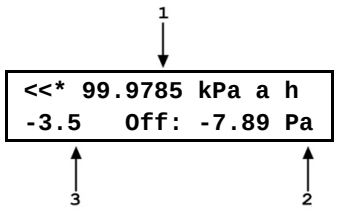

© 2011 Fluke Calibration

원문: Fluke Calibration PG7302 메뉴얼(영문) · 제조사 원문 자료입니다. 사양은 제조사 사정에 따라 변경될 수 있습니다.

we measure, we calibrate, we validate.
KOLAS 국제공인교정기관 · ISO/IEC 17025

Float and rotate the PG7000 piston. When the PG7000 is *ready* (see Section 3.4), press **[ENTER]**. Wait about 6 seconds while the PG7000 takes and averages multiple readings. The display is:

1. RPM offset currently in use.
2. New RPM offset just measured.

```
Old offset: -7.72 Pa
New offset: -7.89 Pa
```

To record the new RPM offset and go to the previous run screen in differential mode with the new RPM offset active, press **[ENTER]**.

To return to the **<New offset?>** screen, press **[ESCAPE]**.

See Section 3.9.4.1, Operating in Differential Mode, for information on differential mode operation.

Note

- **The value of the RPM offset typically should be inside of ± 20 Pa. An RPM offset value outside of this range may indicate a poorly calibrated RPM or a problem with the offset determination procedure.**
- **The difference between the RPM offset at the beginning and at the end of a test will be reflected as zero drift of the differential pressures defined during the test. To quantify this value, perform the RPM offset procedure at the beginning and at the end of a test and evaluate the difference between the starting and ending RPM offset values.**

Operating in Differential Mode

⚠ Caution

Differential mode is often used to calibrate DUTs with very low differential pressure ranges. These can easily be over pressured and damaged by inadvertently applying excessive pressure to one port. OPEN the MPC1-D BYPASS valve to zero the differential across the DUT when there is a risk of overpressure.

From a practical standpoint, operating in differential mode is nearly identical to operating in absolute by vacuum mode (see Section 3.9.11). Unless and AMH-38 automated mass handler is used, vacuum under the bell jar must be broken to make mass load changes and reestablished to set a pressure.

Operation is in either *pressure to mass* or *mass to pressure* mode (see Section 3.9.12).

To operate in differential mode, set the PG7000 Differential Mode Controller (see Figure 9) to apply pressure defined by PG7000 to the high side of the DUT (see Table 18).

원문: Fluke Calibration PG7302 메뉴얼(영문) · 제조사 원문 자료입니다. 사양은 제조사 사정에 따라 변경될 수 있습니다.

TS-TL-FLK-093

we measure, we calibrate, we validate. ㈜테솔 · www.tessol.com TS-TL-FLK-093 64 / 214

KOLAS 국제공인교정기관 · ISO/IEC 17025

Table 18. Valve Settings for Operating in Differential Mode

VALVE	VALVE SETTING
Control Selection	To adjust pressure under PG7000 piston: PG To adjust static pressure: STATIC P
PG Shutoff	Piston is floating or near floating: OPEN Any other time: CLOSED
Test Bypass	To make differential pressure measurements: CLOSED To set or check DUT zero: OPEN
Static P Selection	OFF If static pressure is atmospheric pressure: VENT or OFF

Note

For the highest quality differential mode measurements, use consistent conditions for static pressure and PG7000 vacuum reference pressure at each point. Set the PG7000 Differential Mode Interconnections Kit CONTROL valve to STATIC P to readjust the static pressure to the same value at each point if necessary. This value should be the same as the value at which the RPM offset was determined.

Typical Differential Mode Operational Sequence

See Figure 9 for a schematic of the Differential Mode Controller and its valves.

❶ Set RPM offset at desired static pressure (see Section 3.9.4.1, Selecting Differential Mode, Setting Static Pressure, Finding RPM Offset (**<1run>**)).

❷ Select *pressure to mass* or *mass to pressure* mode (see Section 3.9.12).

❸ Put the Differential Mode Controller PG SHUTOFF valve in CLOSED position.

❹ If desired, read DUT output at zero differential pressure with TEST BYPASS valve open. Put TEST BYPASS valve in CLOSED position. If desired, put CONTROL valve in STATIC P position and use system control component to adjust static pressure to starting value.

❺ Press **[ENTER]** and enter a pressure or mass value. Load mass as instructed on PG7000.

❻ Install bell jar on PG7000, shut the PG7000 vacuum vent valve, open vacuum reference shutoff valve. Wait for vacuum under bell jar to reach *Ready* condition. If using AMH-38 automated mass handler and mass loading resolution of 0.1kg, mass can be changed without breaking vacuum.

❼ Put CONTROL valve in PG position and use system control component to float PG7000 piston. Slowly put PG SHUTOFF valve into OPEN position. Readjust pressure to float the PG7000 piston if necessary.

❽ If desired, put CONTROL valve in STATIC P position and use system control component to adjust static pressure to starting value.

❾ When PG7000 indicates *Ready* on all *Ready/Not Ready* indicators, take DUT reading at differential pressure indicated on the top line of the PG7000 display.

❿ Slowly put PG SHUTOFF valve in CLOSED position.

⓫ Shut vacuum reference shutoff valve, open vacuum vent valve. Wait for pressure under bell jar to return to ambient. Remove bell jar. This step is not necessary is using AMH-38 automated mass handler and mass loading resolution of 0.1 kg.

⓬ Repeat Steps ❺ through ⓫ for each desired differential pressure point.

© 2011 Fluke Calibration

원문: Fluke Calibration PG7302 메뉴얼(영문) · 제조사 원문 자료입니다. 사양은 제조사 사정에 따라 변경될 수 있습니다.

TS-TL-FLK-093

we measure, we calibrate, we validate.
㈜테솔 · www.tessol.com TS-TL-FLK-093 65 / 214
KOLAS 국제공인교정기관 · ISO/IEC 17025

Setting Zero Differential Pressure

See Figure 9 for a schematic of the Differential Mode Controller and its valves.

Zero differential pressure can be set by PG7000 or simply by setting the Differential Mode Controller TEST BYPASS valve to the OPEN position which connects the HIGH and LOW TEST ports together. The TEST BYPASS valve OPEN position is a "true" zero. The zero differential pressure value set by PG7000 has the same uncertainty as any other differential pressure point (see Section 1.2.4.1). Comparing the DUT reading at zero set by TEST BYPASS in the OPEN position and at zero set by PG7000 in differential mode like any other differential pressure, can help quantify the quality of the current RPM offset value. If the difference between the two zero readings is excessive, the RPM offset value should be redetermined (see Section 3.9.4.1, Selecting Differential Mode, Setting Static Pressure, Finding RPM Offset (**<1run>**)). Also, consider correcting all the DUT readings by the difference in the zero reading found in the two different conditions to correct for the defect in the RPM offset.

Viewing Static Pressure and RPM Offset (<2view>)

To view the current RPM offset and the static pressure value at which the offset was recorded, press **[MODE]** and select **<4dif>**, **<2view>**. This display is:

1. RPM offset value that is currently active.
2. PG7000 pressure at which RPM offset was recorded.

```
Offset:  -6.33 Pa
@99.8755 kPa a
```

Press **[ESCAPE]** to return to the **<Differential mode:>** menu.

Press **[ENTER]** to return to the previous run screen.

3.9.4.2 HIGH LINE Differential measurement mode (PG7102, PG7302 and PG7202 ONLY)

❍ **PURPOSE**

To define differential pressures at elevated line pressures up to 11 MPa (1 600 psi) with PG7102 or 110 MPa (16 000 psi) with PG7202 in gas and up to 500 MPa (72 500 psi) in oil.

Note

High line differential (HL dif) mode operation is only supported by PG7102, PG7202 and PG7302. HL dif mode operation requires the use of a two identical PG7102, PG7202 or PG7302s in tandem. Both PG7000s must have nominally identical piston-cylinders and one of the PG7000s must have a "tare" piston-cylinder. The HL dif mode setup for pressure up to 110 MPa (1 600 psi) in gas normally also includes an MPC1-D-1000 or MPC1-D-3000 manual pressure controller and the PK-7100-MPCD-DIF Interconnections Kit P/N 3070226. The HL dif mode setup for pressure greater than 110 MPa uses GPC1 (gas), OPG1 or MPG1 (oil) and custom interconnecting hardware.

원문: Fluke Calibration PG7302 메뉴얼(영문) · 제조사 원문 자료입니다. 사양은 제조사 사정에 따라 변경될 수 있습니다.

TS-TL-FLK-093

we measure, we calibrate, we validate. ㈜테솔 · www.tessol.com TS-TL-FLK-093 66 / 214

KOLAS 국제공인교정기관 · ISO/IEC 17025

❍ PRINCIPLE

Note

Technical Note 0080TN03 provides more detailed information on high line differential mode principles including a complete uncertainty analysis. Consult Fluke Calibration or visit our website, www.dhinstruments.com to obtain a copy.

High line differential mode is designed to allow two PG7102, PG7202 or PG7302 piston gauges to be used together to define differential pressures relative to line pressures significantly above atmospheric pressure. This capability is most often used to test or calibrate differential pressure devices designed to operate at elevated line pressures under their normal operating line pressure conditions.

The main challenge of defining differential pressures at elevated line pressures comes from the very high ratio of line pressure to differential pressure. Relatively small errors and instabilities in the line pressure are very large relative to the differential pressure.

The principal of high line differential mode is to “crossfloat” two PG7000 piston gauges so that they define a common line pressure. After the crossfloat is completed, a BYPASS valve is closed isolating one PG7000 from the other. The “tare” PG7000 maintains the line pressure. Mass is added to the “reference” PG7000 to define differential pressures “on top of” the line pressure. The very high precision of the PG7000 gas operated piston gauges allows them to set and maintain a common line pressure with uncertainty much lower than the overall measurement uncertainty on either piston gauge. The two PG7000s are crossfloated at the line pressure prior to making differential measurement to minimize the contribution of line pressure errors to differential pressure. The crossfloating procedure consists of making mass adjustments on the tare PG7000 so that both pistons, when connected together at the line pressure, fall at their “natural” drop rate. PG7000’s embedded piston fall rate measurements and calculations capabilities are used to assist the operator in performing the crossfloat.

The PG7000 that is used only to maintain the line pressure on the low side of the device under test (DUT) is designated the **tare** PG7000. The **tare** PG7000 is a standard PG7000 but it is normally used with a **tare** piston-cylinder and a **tare** mass set (a standard piston-cylinder and mass set may also be used). A **tare** piston-cylinder effective area is entered as the nominal effective area and its characteristics include k(P), which must be entered in the piston-cylinder definition file (see Section 3.11.1.1). A **tare** mass set has the same configuration as a standard mass set but the exact values of the masses are not measured and the mass set is set up using nominal values for each mass measured value (see Section 3.11.1.6). The **tare** piston mass is adjusted to be slightly under the nominal piston mass. This assures that the **tare** side will always be the light side when crossfloated with the **reference** side. If a **tare** piston-cylinder and mass set is **not** used on the **tare** PG7000, the **tare** side may not be the light side in a crossfloat. In this case, the **tare** mass load on the **reference** side should be increased slightly (generally < 1 g) to ensure that it is heavier, taking care not to confuse the added tare mass with the subsequent differential mass load.

The PG7000 that is used to apply the added pressure to create the differential pressures on the high side of the DUT is designated the **reference** PG7000. The **reference** PG7000 is a standard PG7102, PG7202 or PG7302 with a standard piston-cylinder and mass set. The **reference** must be a PG7102, PG7202 or PG7302. The **tare** may be a PG7102, PG7202, PG7302 or a PG7601.

© 2011 Fluke Calibration

원문: Fluke Calibration PG7302 메뉴얼(영문) · 제조사 원문 자료입니다. 사양은 제조사 사정에 따라 변경될 수 있습니다.

TS-TL-FLK-093

we measure, we calibrate, we validate.
㈜테솔 · www.tessol.com TS-TL-FLK-093 67 / 214
KOLAS 국제공인교정기관 · ISO/IEC 17025

The **tare** and **reference** PG7000s must have nominally identical piston-cylinders. The two PG7000s operate together with the **reference** acting as “master” and the **tare** as “slave”. For communications between the two to occur, COM2 of the **reference** must be connected to COM1 of the **tare** with a valid RS232 cable and proper settings must be made on both interfaces (see Section 3.11.5.1).

For high line differential mode operation up to 11 MPa (1 600 psi) in gas, an MPC1-D and the PK-7100-MPCD-DIF Interconnections Kit P/N 401645 should be used to provide the DUT high and low test connections and support line pressure and differential pressure setting procedures (see Figure 10). For operation at pressure greater than 11 MPa, GPC1 for gas, OPG1 or MPG1 for oil, and custom interconnecting hardware are used in a functionally similar setup.

PG7000 high line differential measurement mode manages the data acquisition and handling necessary to support differential mode operation. Differential mode operation requires setting the line pressure including crossfloating the two PG7000 piston gauges and then setting differential pressures at the line pressure. These two independent operations are supported under **[MODE]**, **<3HLdif>**, **<1run>**.

⚠ Caution

- **High line differential mode relies upon the very high sensitivity of PG7000 gas operated piston-cylinders to set and stabilize low differential pressures relative to very high line pressures. To meet the full performance potential of PG7000 high line differential mode operation, external influences on the piston gauges must be minimized. Air currents and vibrations are the most significant possible influences. Do not operate near an active air conditioning or heating duct, avoid opening and closing doors or any movement of personnel around the system. Consider putting the PG7000s in an electrostatic free enclosure if the environment cannot be adequately controlled.**
- **See Section 7.2.1 for information on the exact calculations used by PG7000 to obtain the differential pressures defined in high line differential mode.**

원문: Fluke Calibration PG7302 메뉴얼(영문) · 제조사 원문 자료입니다. 사양은 제조사 사정에 따라 변경될 수 있습니다.

TS-TL-FLK-093

we measure, we calibrate, we validate.
KOLAS 국제공인교정기관 · ISO/IEC 17025

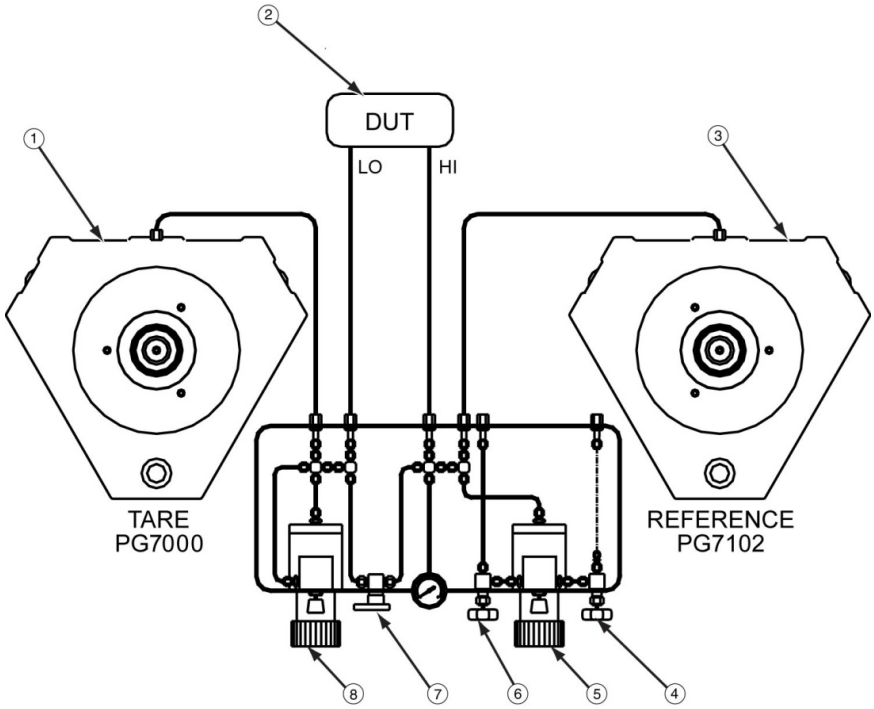

1. Tare PG7000 (PG7102, PG7202, PG7302, or PG7601)
2. Differential Device Under Test (DUT
3. Reference PG7000 (PG7102, PG7202 or PG7302)
4. MPC1-D or other INLET Valve
5. MPC1-D or other Hi Variable Volume (Hi VV)
6. MPC1-D or other VENT Valve
7. MPC1-D or other HI/LO BYPASS Valve
8. MPC1-D or other Lo Variable Volume (Lo VV)

Figure 11. High Line Differential Mode Schematic

Note

Technical Note 0080TN03 provides more detailed information on high line differential mode principles using PG7102 and PG7601 piston gauges and includes a complete uncertainty analysis. Consult Fluke Calibration or visit our website, www.dhinstruments.com to obtain a copy.

❍ OPERATION

Note

High line differential mode does not support operation with AMH automated mass handler(s).

To select high line differential mode operation and access differential mode functions press **[MODE]**, **<3HLdif>** on the **reference** PG7000.

Note

When operating in high line differential pressure mode, the reference PG7000 is "master" and the tare PG7000is "slave". All operator interaction is with the PG Terminal of the reference PG7000. The tare's display is for information only. The tare PG7000 keypad is inactive.

© 2011 Fluke Calibration

원문: Fluke Calibration PG7302 메뉴얼(영문) · 제조사 원문 자료입니다. 사양은 제조사 사정에 따라 변경될 수 있습니다.

we measure, we calibrate, we validate.
KOLAS 국제공인교정기관 · ISO/IEC 17025

High line differential mode operation includes:

- Entering differential mode (see Section 3.9.4.2, Entering High Line Differential Mode ([MODE], <3HLdif>, <1run>)).
- Setting a line pressure (see Section 3.9.4.2, Setting a Line Pressure ([MODE], <3HLdif>, <1run>, <2yes>)).
- Setting differential pressures at a high line pressure (see Section 3.9.4.2, Setting Differential Pressures at a High Line Pressure).
- Viewing current line pressure and natural fall rates for the line pressure (see Section 3.9.4.2, Viewing Line Pressure, Starting Piston-Cylinder Temperatures and Natural Piston Fall Rates ([MODE], <3HLdif>, <2view>).

Entering High Line Differential Mode ([MODE], <3HLdif>, <1run>)

To enter high line differential mode, press **[MODE]** ,**<3HLdif>**, **<1run>** on the **reference** PG7000's PG Terminal.

The **reference** PG7000 initializes high line differential mode. To successfully enter high line differential mode the **reference** PG7000 must be able to communicate with the **tare** PG7000, the piston-cylinders in both PG7000s must be nominally identical and the piston-cylinder in the tare PG7000 must have a non-zero value for k(P) in its piston-cylinder module file. When initializing high line differential mode, the **reference** PG7000 tests for these conditions and provides error messages as follows:

- **<Cannot find PG7000 on COM2>**: COM2 of the **reference** PG7000 must be connected to COM1 of the **tare** PG7000 using a valid RS232 cable and both interfaces must be properly set so that communications between the two PG7000s can occur (see Sections 3.11.5.1, 3.11.5.4). If the **reference** is unable to communicate with the **tare**, this error message is displayed. If this error message is observed, correct the communications problem and retry (see Section 3.11.5.1).
- **<T & R PCs not a pair, cannot run HLdif>**: The piston-cylinder modules in the two PG7000s must be nominally identical (have the same nominal mass to pressure conversion coefficient). If the **reference** PG7000 finds the two piston-cylinder modules to be different, this error message is displayed. If this error message is observed, correct the situation by changing piston-cylinder selection or adjusting one piston-cylinder's definition (see Sections 3.9.2, 3.11.1.2).
- **<No T PC in T PG7000, cannot run HLdif>**: The piston-cylinder module selected in the tare PG7000 must have a non-zero value for k(P) in the active piston-cylinder module file. If the k(P) value is zero, this error message is displayed. If this error message is observed, correct the situation by providing a non-zero value for k(P) in the piston-cylinder module file of the tare piston-cylinder (see Section 3.11.1.2).

원문: Fluke Calibration PG7302 메뉴얼(영문) · 제조사 원문 자료입니다. 사양은 제조사 사정에 따라 변경될 수 있습니다.

TS-TL-FLK-093

we measure, we calibrate, we validate.
KOLAS 국제공인교정기관 · ISO/IEC 17025

After high line differential mode is initialized, **the display of the tare PG7000** is:

1. Standard Ready/Not Ready indicators for the tare PG7000.
2. Last line pressure set in the pressure unit of measure that was active when the line pressure was set. The unit of measure remains the same, even if the reference PG7000's unit of measure is changed, until a new line pressure is set.

```
1      2
↓< 1000.70 psi  LP
- 3.7 30.3 kg + trim
5      4      3
```

3. Label indicating that the mass load includes whatever trim masses were loaded on the tare piston in the crossfloating process to reach equilibrium.
4. Tare mass load for the last line pressure set.
5. Current piston position of the tare PG7000.

While in high line differential pressure mode, the **tare** PG Terminal keypad is inactive.

After high line differential mode is initialized, **the display of the reference PG7000** is:

1. Current (last set) value of line pressure in current pressure unit of measure.

```
1
Line P:    1000 psi
New line P? 1no 2yes
```

Select **<1no>** to use the existing line pressure settings and return to the previous run screen in high line differential measurement mode (see Section 3.9.4.2, **Setting Differential Pressures at a High Line Pressure**).

Select **<2yes>** to set a new line pressure value or repeat the line pressure setting procedure at the current line pressure value (see Section 3.9.4.2, **Setting a Line Pressure ([MODE], <3HLdif>, <1run>, <2yes>)**).

Note

The line pressure setting procedure must be executed each time the line pressure is changed and should be executed at the beginning of each differential pressure calibration sequence even if the line pressure is the same as the line pressure previously used. Select <2yes> to go to the line setting procedure.

Setting a Line Pressure ([MODE], <3HLdif>, <1run>, <2yes>)

⚠ Caution

To meet the full performance potential of PG7000 high line differential mode operation, external influences on the piston gauges must be reduced or eliminated. Air currents and vibrations are the most significant possible influences. Do not operate near an active air conditioning or heating duct, avoid opening and closing doors or any movement of personnel around the system.

⚠ Caution

Leaks at any point in the test system are highly detrimental to measurement results in high line differential mode. Thoroughly leak check the system before operation and correct any leaks detected.

© 2011 Fluke Calibration

원문: Fluke Calibration PG7302 메뉴얼(영문) · 제조사 원문 자료입니다. 사양은 제조사 사정에 따라 변경될 수 있습니다.

we measure, we calibrate, we validate.
㈜테솔 · www.tessol.com TS-TL-FLK-093 71 / 214
KOLAS 국제공인교정기관 · ISO/IEC 17025

TS-TL-FLK-093

Setting a line pressure has two steps:

❶ Setting the line pressure and determining the natural fall rates of the tare and reference pistons.

❷ Performing a crossfloat of the pistons to reach equilibrium and minimize differential pressure zero offset.

To set a line pressure press **[MODE], <3HLdif>, <1run>, <2yes>** on the **reference** PG7000's PG Terminal. The display is:

1. Edit field for entry of desired line pressure value in current pressure unit of measure. Defaults to last value used.

```
Target line P:
1000 psi
```

1

Note

Values of line pressure are always entered and displayed in gauge mode (i.e., relative to atmospheric pressure). Line pressure mass loading instructions are always given with 0.1 kg resolution. The minimum line pressure is the pressure resulting when the mass of the piston + mass bell is loaded.

Enter the desired line pressure value. The next display indicates the mass to load to set the line pressure.

```
Load nominal mass on
T & R: 33.3 kg
```

This display corresponds to the standard mass loading instruction display of *pressure to mass* mode (see Section 3.9.11.1). The mass loading instruction is always given with 0.1 kg resolution regardless of the current mass loading resolution setting (see Section 3.9.10). Load the indicated mass on both the **tare** and **reference** PG7000s following PG7000 mass loading protocol using main and fractional masses only (do not use trim masses) (see Section 3.6). Press **[ENTER]** when ready.

Note

Line pressure mass instructions are always given with 0.1 kg resolution. This is to preserve the smaller masses for setting the differential pressure. The differential pressure mass loading instructions follow conventional PG7000 mass loading protocol using the masses that remain after the line pressure has been set. It may be necessary to select the line pressure value to assure that adequate masses remain to set the desired differential pressure. For example, if the line pressure requires loading 33.3 kg, a 0.2 and 0.1 kg mass will be used to set the line pressure and will not be available if needed to set the desired differential pressure. If this situation occurs, consider changing the line pressure so that it is set using a whole number of kilograms, in this example 33 or 34 kg.

The display is:

```
Open bypass, float T
Close bypass,[ENTER]
```


원문: Fluke Calibration PG7302 메뉴얼(영문) · 제조사 원문 자료입니다. 사양은 제조사 사정에 따라 변경될 수 있습니다.

TS-TL-FLK-093

we measure, we calibrate, we validate.
㈜테솔 · www.tessol.com TS-TL-FLK-093 72 / 214
KOLAS 국제공인교정기관 · ISO/IEC 17025

With the system's BYPASS valve OPEN (see Figure 10), use the INLET and/or VENT valve and the high side variable volume to adjust the pressure to float the piston of the **tare** PG7000. This should cause the **reference** PG7000 piston to be at its bottom stop. Once the **tare** piston is floating, close the system's BYPASS valve and press **[ENTER]**. The next display is:

1. Tare piston position.
2. Reference piston position.

```
+1.2 mm -3.6    Set
T & R to + 1.0&[ENT]
```

Use the high and/or low side variable volume to set both pistons to a position just above + 1.0 mm. Ensure that both pistons are rotating. As both pistons fall through the + 1.0 position, press **[ENTER]**. PG7000 pauses for 5 seconds and then measures the natural fall rates of both pistons for 30 seconds.

1. Indication of tare piston position.
2. Indication of reference piston position.
3. 30 second count down.

```
T+1.0 mm R+1.0
Finding↓rates     29
```

Wait for the 30 second timer to count down while the measurements are made. Be sure not to interfere with the free movement of the piston-cylinders during the countdown. After the countdown completes, the results are displayed:

1. Average fall rate of the taring piston.
2. Average fall rate of the reference piston.
3. Difference between the reference and taring piston fall rates (R - T). This is the "natural fall rate difference".

```
T-0.9 mm/min R-1.1
∆-0.2 Save 1yes 2no
```

Note

The "natural fall rate difference" is the difference between the fall rates of the two pistons when they are floating naturally at the line pressure. When performing the crossfloat between the pistons in the next step of line pressure setting, the objective will be to adjust the mass of the tare piston until the "crossfloat fall rate difference" measured with the system's BYPASS valve open is equal to the "natural fall rate difference" measured with the BYPASS closed.

Select **<2no>** to repeat the "natural fall rate difference" measurement. Select **<2yes>** to accept the "natural fall rate difference" value and continue to the second step of line pressure setting which is crossfloating the two piston-cylinders. The display is:

```
Open bypass and
[ENTER] to xfloat
```


© 2011 Fluke Calibration

원문: Fluke Calibration PG7302 메뉴얼(영문) · 제조사 원문 자료입니다. 사양은 제조사 사정에 따라 변경될 수 있습니다.

we measure, we calibrate, we validate.
㈜테솔 · www.tessol.com TS-TL-FLK-093 73 / 214
KOLAS 국제공인교정기관 · ISO/IEC 17025

TS-TL-FLK-093

Open the BYPASS valve and press **[ENTER]** to proceed with the crossfloat. The display is:

1. Tare piston position.
2. Reference piston position.
3. Difference between the "natural fall rate difference" and the "crossfloat fall rate difference" in mm/min. This is the "equilibrium fall rate".

```
1          2
T-1.2 mm R+0.5
Δ+1.2 B/P open,[ENT]
3
```

Note

The "equilibrium fall rate" is the difference between the "natural fall rate difference" and the "crossfloat fall rate difference":

Equilibrium fall rate = $(R_{nat} - T_{nat}) - (R_{xfloat} - T_{xfloat})$

When the "equilibrium fall rate" is zero, the two piston-cylinders are at equilibrium at the line pressure.

Crossfloat the two pistons to find equilibrium by making mass adjustments on the tare piston. Finding equilibrium is an iterative process which is assisted by PG7000. Pressing **[ENTER]** starts an automated fall rate measurement sequence that measures the fall rates more precisely than the real time indication. Following a 30 second countdown or when one of the pistons has moved more than 1 mm, PG7000 displays the measured "equilibrium fall rate" and suggests the mass adjustment needed on the **tare** piston to achieve an "equilibrium fall rate" of zero. This process can be repeated as many times as desired.

Note

If a standard piston-cylinder and mass set (rather than a tare piston-cylinder and mass set) is being used in the tare PG7000, the tare piston may be the heavy one at the start of the crossfloat (see Section 3.9.4.2, PRINCIPLE). In this case, rather than reduce mass on the tare PG7000, add a small amount of mass to the reference PG7000 before starting the crossfloat so that the tare piston will be the lighter one (generally < 1 g is needed). This will simplify the crossfloating procedure and subsequent differential mass loading. Be sure not to confuse the additional tare mass on the reference piston with the subsequent differential mass loads.

Using trim masses (50 g and below) from the trim mass set, adjust the mass load on the tare PG7000 to establish equilibrium ("equilibrium fall rate" near zero). When the mass adjustments are complete, close the BYPASS valve and put both pistons at a position just above 0.0 mm. Ensure that both pistons are rotating. As the pistons fall through the 0.0 mm point, OPEN the BYPASS valve, then press **[ENTER]**. After a 5 second delay for stabilization, PG7000 begins the fall rate measurement. The display is:

1. Indication of tare piston position.
2. Indication of reference piston position.
3. 30 second count down.
4. Average "equilibrium fall rate" since start of the countdown.

```
1          2
T +0.1 mm R +0.0
Δ-12.2 Xfloating  30
4                 3
```


원문: Fluke Calibration PG7302 메뉴얼(영문) · 제조사 원문 자료입니다. 사양은 제조사 사정에 따라 변경될 수 있습니다.

PG7000 is measuring the drop rate of the two pistons and calculating the "equilibrium fall rate". Be sure to not interfere with the free movement of the piston-cylinders or to introduce any outside interference while the countdown occurs. The fall rate measurement continues until either piston has moved 1 mm or 30 seconds have elapsed. The measurement can also be concluded by pressing **[ENTER]**. When the fall rate measurement has concluded, the results are displayed:

1. Average "equilibrium fall rate" measured in last crossfloat.
2. Suggested mass change (in grams) on the tare (T) piston to achieve equilibrium based on equilibrium fall rate just measured.

```
1      2
Δ-10.3 +0.050 g on T
Repeat 1yes 2no
```

Evaluate the quality of the equilibrium. Check the value of the "equilibrium fall rate". Consider that the closer the rate is to zero, the better the equilibrium; consider that the suggested mass change on the tare piston times the mass to pressure conversion coefficient of the piston approximates the pressure value of the defect in the equilibrium. Check the difference between the DUT output with the BYPASS open and BYPASS closed to evaluate the zero error due to the equilibrium.

Select **<1yes>** to return to the crossfloat **<B/P open, [ENTER]>** screen.

If you are satisfied with the quality of the equilibrium, select **<2no>** to go to the run screen in high line differential pressure mode and set differential pressures at this line pressure (see Section 3.9.4.2, **Setting Differential Pressures at a High Line Pressure**).

Note

- **The value of the average "equilibrium fall rate" measured by the crossfloat should typically be inside of ± 5 mm/min and/or the suggested mass adjustment should be inside of 50 mg.**
- **The device under test (DUT) can often be used to evaluate the quality of the equilibrium between the two pistons and to correct for the zero error caused by the defect in equilibrium. Observe the change in the DUT output when the system BYPASS valve is opened and closed with the pistons floating. With the system BYPASS valve open, by definition, the differential pressure applied to the DUT is zero. The change in the DUT output observed when the BYPASS valve is closed with the pistons floating is the zero error due to the defect in the crossfloat equilibrium. Consider correcting all of the DUT readings by the value of this offset to correct for the crossfloat zero error. When using the offset, keep in mind that, due to differential evolution of the two PG7000 piston-cylinder temperatures, the differential pressure at zero differential mass load may not be zero.**

Setting Differential Pressures at a High Line Pressure

⚠ Caution

- **To meet the full performance potential of PG7000 high line differential mode operation, external influences on the piston gauges must be reduced or eliminated. Air currents and vibrations are the most significant possible influences. Do not operate near an active air conditioning or heating duct, avoid opening and closing doors or any movement of personnel around the system.**

© 2011 Fluke Calibration

원문: Fluke Calibration PG7302 메뉴얼(영문) · 제조사 원문 자료입니다. 사양은 제조사 사정에 따라 변경될 수 있습니다.

TS-TL-FLK-093

we measure, we calibrate, we validate.
㈜테솔 · www.tessol.com TS-TL-FLK-093 75 / 214
KOLAS 국제공인교정기관 · ISO/IEC 17025

- **It is not possible to operate in differential mode with leaks at any point in the test system. Thoroughly leak check the system before operation and correct any leaks detected.**
- **High line differential mode is often used to calibrate DUTs whose differential pressure range is very low relative to the line pressure. These DUTs can easily be over pressured by inadvertently applying excessive pressure to one port. When operating in high line differential pressure mode, OPEN the system BYPASS valve to zero the differential across the DUT when there is any risk of overpressure.**

Before operating in differential mode the line pressure must be set (see Section 3.9.4.2, **Setting a Line Pressure ([MODE], <3HLdif>, <1run>, <2yes>)**).

Once the line pressure is set, from a practical standpoint, operating in high line differential mode is very similar to operating in gauge mode (see Section 3.9.11).

All operator interaction is with the PG Terminal of the **reference** PG7000. The PG Terminal of the **tare** PG7000 is for display only. The **tare** PG7000 PG Terminal keypad is locked out during high line differential mode operation.

Operation is in either *pressure to mass* or *mass to pressure* mode (see Section 3.9.12).

To operate in differential mode the system BYPASS valve must be closed (see Figure 10).

All mass loading and unloading to define differential pressures is made on the **reference** PG7000. Mass loading and unloading instructions follow conventional PG7000 mass loading protocol (see Section 3.6) but the differential mass loading instructions are "on top of" the line pressure mass load. The mass load corresponding to the line pressure on the **tare** and **reference** PG7000s must remain exactly the same throughout the differential measurements.

While in high line differential mode, the piston position and piston rotation *Ready/Not Ready* indicators on the **reference** PG7000 reflect the status of both the **tare** and the **reference** PG7000s. For the indicator to indicate *Ready*, both the **tare** and the **reference** PG7000s must meet their current *Ready/Not Ready* criteria (see Section 3.4). A **<T>** in a *Ready/Not Ready* status indicator indicates that the tare PG7000 is *Not Ready.*

Note

- **When operating in high line differential mode, the measurement mode indicating character directly to the right of the pressure unit of measure in the main run screen is <d> (see Section 37).**
- **Zero differential pressure (BYPASS valve closed) can be set by the system. In some cases, the differential mass to load to set zero is not zero. This is normal and can occur due to differential changes in the temperature of the tare and reference piston-cylinders after the original line pressure crossfloat. A differential piston-cylinder module temperature change while running in high line differential mode affects the line pressure causing an offset to the differential pressure. The offset to the differential pressure causes a non-zero differential mass load to be needed to set zero differential pressure (see Section 7.2.1). Conversely, and for the same reason, a differential mass load of zero may not result in a differential pressure of zero.**

원문: Fluke Calibration PG7302 메뉴얼(영문) · 제조사 원문 자료입니다. 사양은 제조사 사정에 따라 변경될 수 있습니다.

Typical Sequence to Set Differential Pressures at a High Line Pressure

❶ Set the desired line pressure (see Section 3.9.4.2, Setting a Line Pressure (**[MODE]**, **<3HLdif>**, **<1run>**, **<2yes>**)).

❷ Select *pressure to mass* or *mass to pressure* mode (see Section 3.9.12).

❸ If desired, read DUT output at zero differential pressure with BYPASS valve OPEN. Then, put the BYPASS valve in CLOSED position. Float both PG7000 pistons before operating the BYPASS valve. Read DUT output at zero as defined by the PG7000s if desired (this value can be used as an offset correction on subsequent DUT differential pressure outputs).

❹ Press **[ENTER]** and enter a pressure or mass value. All mass loading and unloading to define differential pressures is performed on the **reference** PG7000. Follow normal PG7000 mass loading protocol (see Section 3.6). Note, however, that the mass loading instructions are "on top of" the mass already loaded to define the line pressure. The mass corresponding to the line pressure must remain exactly the same on both the **tare** and **reference** PG7000s throughout the differential pressure measurements.

❺ Float the **tare** and **reference** pistons. For best results put both pistons slightly above the 0.0 point, for example +0.3 mm.

❻ When the **reference** PG7000 indicates *Ready* on both *Ready/Not Ready* indicators (see Section 3.4), take the DUT reading at the differential pressure indicated on the top line of the **reference** display. For best results log DUT readings and average them over time while the PG7000 pistons fall through the 0.0 mm point. Averaging for 10 to 30 seconds allows the random pressure noise from piston rotation to be integrated and eliminated.

❼ Repeat Steps ❹ through ❻ for each desired differential pressure point.

❽ If the last differential pressure is zero, consider reading the DUT output with the BYPASS valve CLOSED. Then OPEN the BYPASS valve to set "true" zero differential pressure.

Viewing Line Pressure, Starting Piston-Cylinder Temperatures and Natural Piston Fall Rates ([MODE], <3HLdif>, <2view>)

To view the last line pressure setting, the starting piston-cylinder module temperatures, the natural piston fall rates and the "natural fall rate difference" recorded at that line pressure, press **[MODE]** and select **<3HLdif>**, **<2view>**. The display is:

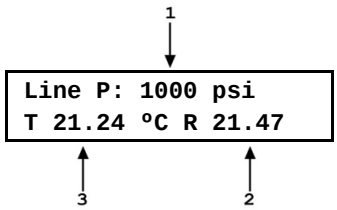

1. Last line pressure value set (line pressure is always in gauge mode).
2. Temperature of the reference piston-cylinder logged when the line pressure crossfloat was completed.
3. Temperature of the tare piston-cylinder module logged when the line pressure crossfloat was completed. The starting temperatures are the temperatures logged at the time the line pressure setting crossfloat was completed. These temperatures are used in calculating corrections to the differential pressure to take into account differential temperature changes in the piston after completion of the crossfloat (see Section 7.2.1 for differential pressure calculation information).

© 2011 Fluke Calibration

원문: Fluke Calibration PG7302 메뉴얼(영문) · 제조사 원문 자료입니다. 사양은 제조사 사정에 따라 변경될 수 있습니다.

we measure, we calibrate, we validate.
KOLAS 국제공인교정기관 · ISO/IEC 17025

Press **[ENTER]** to continue to the next view screen or **[ESCAPE]** to go to the previous screen. The next view screen is:

1. Average fall rate of the tare piston recorded at the last line pressure.
2. Average fall rate of the reference piston recorded at the last line pressure.
3. Difference between the reference and tare piston average fall rates (R - T). This is the "natural fall rate difference".

```
1                    2
T-0.91 mm/min R-1.10
Δ -0.2 Save 1yes 2no
3
```

Note

The "natural fall rate difference" is the difference between the fall rates of the two pistons when they are floating naturally at the line pressure. The "natural fall rate" can change slightly as operating conditions change so the "natural fall rate" determination and piston crossfloat procedure should be performed at the beginning of each sequence of differential pressure definitions.

To return to the **<HLDif mode:>** menu, press **[ESCAPE]**.

To return to the previous run screen, press **[ENTER]**.

3.9.5 [SYSTEM]

❍ **PURPOSE**

To access the two SYSTEM run screens which display current values of PG7000 piston behavior, piston-cylinder temperature and vacuum reference (PG7601 only) measurements.

❍ **OPERATION**

To access the SYSTEM run screens, press **[SYSTEM]** from any other run screen. There are two SYSTEM run screens. Pressing **[SYSTEM]** or **[±]** when in a SYSTEM screen toggles between the first and second SYSTEM screens.

See Sections 3.9.5.1 and 3.9.5.2 for detailed information on the contents of the first and second SYSTEM run screens.

Note

The SYSTEM screens are *run* screens. This means that other functions can be accessed from the SYSTEM screens and the active SYSTEM screen will be returned to when leaving functions. The MAIN screen and AMBIENT screen are also *run* screens (see Section 3.8).

3.9.5.1 First System Run Screen

❍ **OPERATION**

The first SYSTEM run screen provides real time display of piston rotation rate, decay in piston rotation rate, piston position and piston fall rate.

To access the first SYSTEM run screen, press **[SYSTEM]** from any other run screen.

원문: Fluke Calibration PG7302 메뉴얼(영문) · 제조사 원문 자료입니다. 사양은 제조사 사정에 따라 변경될 수 있습니다.

we measure, we calibrate, we validate.
㈜테솔 · www.tessol.com TS-TL-FLK-093 78 / 214
KOLAS 국제공인교정기관 · ISO/IEC 17025

TESSOL Technical Library
TS-TL-FLK-093

The first SYSTEM run screen displays:

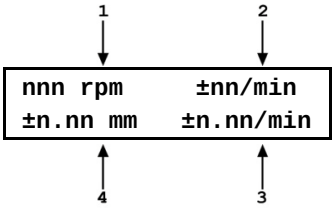

1. **<nnn rpm>**: Numerical value of current piston rate of rotation. The unit of measure is rotations per minute **[rpm]** and cannot be changed. Flashes when Not Ready and piston is floating (see Section 3.4.2). Indicates **< ---- >** when information is unavailable or out of range.
2. **<±nn/min>:** Numerical value of current decay in piston rotation rate (deceleration). The unit of measure is rotations per minute [rpm/min] and cannot be changed. **< ---- >** when information is unavailable or out of range.
3. **<±n.nn/min>:** Sign and numerical value of current piston vertical rate of displacement. A negative value indicates piston falling. A positive value indicates piston rising. The unit of measure is millimeters per minute [mm/min] and cannot be changed. Indicates **< ---- >** when information is unavailable or out of range.
4. **<±n.nn mm>:** Sign and numerical value of current position of the piston within the piston stroke (see Section 3.5). The unit of measure is millimeters **[mm]** away from mid-stroke position and cannot be changed. Indicates **<HSTOP>** when the piston is at the high stop (all the way up) and **<LSTOP>** when the piston is at the low stop (all the way down). Flashes when Not Ready and piston is floating (see Section 3.4.1). Indicates **< ---- >** when information is unavailable or out of range.

Pressing **[ESCAPE]** in the first SYSTEM run screen returns operation to the MAIN run screen. Pressing **[SYSTEM]** or **[±]** toggles between the first and second run screen. All function keys are active from the first SYSTEM run screen and operation returns to that screen when leaving functions the were accessed from it.

Note

- **The measurement systems for piston behavior indications rely on movement of the mass loading bell. Piston behavior indications (piston position, piston rotation rate) are not valid when the mass bell is not loaded on the piston.**
- **See Section 3.5 for information on the piston stroke and measurement zone.**

3.9.5.2 Second System Run Screen

❍ OPERATION

The second SYSTEM run screen displays the values of piston-cylinder temperature and temperature rate of change measured by PG7000. PG7601 also displays reference vacuum and vacuum rate of change. If internal or external measurement is specified for the vacuum values in SETUP (see Section 3.10), the second SYSTEM run screen provides a real time display of the values measured.

To access the second SYSTEM run screen, press **[SYSTEM]** or **[±]** from the first SYSTEM run screen. To access the first SYSTEM run screen, press **[SYSTEM]** from any run screen.

© 2011 Fluke Calibration

원문: Fluke Calibration PG7302 메뉴얼(영문) · 제조사 원문 자료입니다. 사양은 제조사 사정에 따라 변경될 수 있습니다.

we measure, we calibrate, we validate.
㈜테솔 · www.tessol.com TS-TL-FLK-093 79 / 214
KOLAS 국제공인교정기관 · ISO/IEC 17025

TESSOL Technical Library
TS-TL-FLK-093

The second SYSTEM run screen displays:

```
1          2
n.nn°C     ±n.nn/min
nnn.n Pa   ±nnn.n/min
4          3
```

1. **<n.nn°C>:** Current piston-cylinder temperature. Source of value can be internal measurement, default or user depending on current SETUP selection (see Section 3.10). The unit of measure is degrees Centigrade **[±°C]** and cannot be changed. Indicates **< ---- >** when information is unavailable or out of range.
2. **<+n.nn/min>:** Sign and numerical value of current rate of change of temperature. A negative value indicates temperature decreasing. A positive value indicates temperature increasing. The unit of measure is degrees Centigrade per minute **[°C/min]** and cannot be changed. Indicates **< ---- >** when information is unavailable or out of range. Indicates **< ---- >** when "user" or "default" is the current SETUP selection for piston-cylinder temperature source (see Section 3.10).
3. **<+nnn.n/min>:** (Used for PG7601 only.) Sign and numerical value of current rate of change of the vacuum reference pressure. A negative value indicates pressure decreasing. A positive value indicates pressure increasing. The unit of measure is Pascal per minute **[Pa/min]** and cannot be changed. Indicates **< ---- >** when information is unavailable or out of range. **<Blank>** if the PG7000 model is not PG7601 or if user or default is the current SETUP selection for reference vacuum (see Section 3.10).
4. **<nnn.n Pa>:** (Used for PG7601 only.) Current vacuum reference value. Can be internal measurement, external measurement, default or user depending on current SETUP selection. Flashes when Not Ready and piston is floating (see Section 3.4.3). The unit of measure is Pascal **[Pa]** and cannot be changed. Indicates **< >20 Pa >** if current SETUP selection is internal or external and current measurement is out of range or greater than 20 Pascal. **<Blank>** if PG7000 model is not PG7601.

Pressing **[ESCAPE]** in the second SYSTEM run screen returns operation to the MAIN run screen. Pressing **[SYSTEM]** or **[±]** toggles between the first and second SYSTEM run screen. All function keys are active from the second SYSTEM run screen and operation returns to that screen when leaving functions that were accessed from it.

Note

The current selection in SETUP determines the source of the values used by PG7000 for piston-cylinder temperature and vacuum reference values. If the SETUP setting is user or default, the SYSTEM screen displays the user or default value, not PG7000's on-board measurement(s).

3.9.6 [AMBIENT]

❍ PURPOSE

Access the AMBIENT run screen which displays the current ambient condition values being used by PG7000 for calculations of reference pressures.

❍ PRINCIPLE

PG7000 uses ambient condition values to calculate the reference pressures that it defines (see Section 7.2). The source of the ambient condition values is specified in the current SETUP file (see Section 3.10). The AMBIENT run screen displays the current ambient condition values. If the SETUP selection for the ambient condition is internal measurement, then the AMBIENT run screen provides a real time display of the measurement of PG7000's on-board sensor for that variable.

❍ OPERATION

To access the AMBIENT run screen, press **[AMBIENT]** from any other run screen (MAIN or SYSTEM).

원문: Fluke Calibration PG7302 메뉴얼(영문) · 제조사 원문 자료입니다. 사양은 제조사 사정에 따라 변경될 수 있습니다.

TESSOL Technical Library

TS-TL-FLK-093

we measure, we calibrate, we validate. ㈜테솔 · www.tessol.com TS-TL-FLK-093 80 / 214

KOLAS 국제공인교정기관 · ISO/IEC 17025

Note

The AMBIENT screen is a *run* screen. This means that other functions can be accessed from the AMBIENT screen and the active AMBIENT screen will be returned to when leaving functions. The MAIN screen and SYSTEM screens are also *run* screens (see Sections 3.7 and 3.9.5).

The AMBIENT run screen displays:

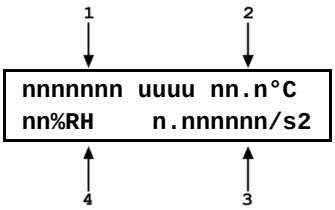

1. **<nnnnnnn uuuu>:** Current numerical value and pressure unit of atmospheric pressure. Source of value can be internal measurement, remote barometer, default or user depending on current SETUP selection (see Section 3.10). The unit of measure is determined by the UNIT function setting (see Section 3.9.3). ATM head is applied to internal or external barometer reading to correct atmospheric pressure to the PG7000 reference level (see Section 3.11.3.3). Indicates **< ---- >** when information is unavailable or out of range. Indicates **<TIMEOUT>** if the current SETUP selection is a remote barometer and PG7000 communication with the barometer times out.
2. **<n.nn°C>:** Current ambient temperature. Source of value can be internal measurement, default or user depending on current SETUP selection (see Section 3.10). The unit of measure is degrees Centigrade **[ºC]** and cannot be changed. Indicates **< ---- >** when information is unavailable or out of range.
3. **<n.nnnnnnm/s2>:** Value of local acceleration due to gravity. Can be default or user depending on current SETUP selection (see Section 3.10). The unit of measure is meters per second squared (m/s2) and cannot be changed.
4. **<nn%RH>:** Current ambient relative humidity. Can be internal measurement, default or user depending on current SETUP selection (see Section 3.10). The unit of measure is percent relative humidity (%RH) and cannot be changed. Indicates **< -- >** if current SETUP selection is internal and current measurement is unavailable or out of range.

Pressing **[ESCAPE]** in the AMBIENT run screen returns operation to the MAIN run screen. All function keys are active from the AMBIENT run screen and operation returns to that screen when leaving functions that were accessed from it.

Note

- **The current selection in SETUP determines the source of the values used by PG7000 for atmospheric pressure, ambient temperature and relative humidity. If the SETUP setting for these values is user or default, the AMBIENT screen displays the user or default value, not PG7000's on-board measurement(s).**
- **To change the ambient pressure units of measure, see Section 3.9.3. When the current pressure unit of measure is an altitude unit, atmospheric pressure in the AMBIENT run screen is expressed in kPa if the altitude unit is meters (m) or psi if the altitude unit is feet (ft).**

3.9.7 [HEAD]

❍ PURPOSE

To cause a pressure value, representing the fluid head resulting from a difference in height, to be added to the pressure defined by PG7000 at its reference level. To set the height of the DUT head.

❍ PRINCIPLE

The pressure defined by the PG7000's floating piston is the pressure at the bottom of the piston. This is referred to as the PG7000 reference level. The height of the bottom of the piston with the piston in mid-stroke position is marked ***reference level*** on the PG7000 piston-cylinder module mounting post. Frequently, when performing a calibration or test, the device or system under test is at a different height than the PG7000 reference level. This difference in height (referred to as **DUT head**) can cause a significant difference between the pressure defined by the PG7000 at its reference level and the pressure actually applied to the device under test located at a different height. In this case, it is useful to make a head correction to the pressure defined by the PG7000 at its reference level in order to accurately predict the pressure actually applied at a different height. The HEAD function allows this head correction

© 2011 Fluke Calibration

원문: Fluke Calibration PG7302 메뉴얼(영문) · 제조사 원문 자료입니다. 사양은 제조사 사정에 따라 변경될 수 있습니다.

we measure, we calibrate, we validate. ㈜테솔 · www.tessol.com TS-TL-FLK-093 81 / 214
KOLAS 국제공인교정기관 · ISO/IEC 17025

TESSOL Technical Library TS-TL-FLK-093

to be applied automatically for a variety of fluids based on operator entry of the height difference. The fluid used and the HEAD function units of measure are set by pressing **[SPECIAL]** and selecting **<3head>** (see Section 3.11.3).

PG7000 can accurately determine **head** pressures for gases (nitrogen, helium and air) and liquids (Di-2 ethylhexyl Sebacate oil, water and a user defined liquid) as the pressurized medium.

Note

- **When gas is the test fluid, use of the HEAD function is most important at low absolute pressures. In this case, specifying the head height within ± 0.2 in. (5 mm) is adequate to ensure that, even in the worst case, the uncertainty on the head correction will be insignificant relative to the tolerance on the PG7000 measurement. Use of the HEAD function to ensure tolerance measurements is particularly critical when a liquid is the test fluid, due to the high density of liquids. To determine when and how precisely a head correction for liquids must be made, 0.03 psi/inch (90 Pa/cm) may be used as an estimation of the liquid head value.**
- **Regardless of the head function's setting, corrections are automatically applied to the calculated reference pressure to compensate for the deviation between the current piston position and the mid-stroke position (see Section 3.11.3.4).**
- **The pistons of certain gas operated piston-cylinder modules are hollow. Due to their irregular shape, for these pistons, the natural reference level is not at the bottom of the piston. So that, in practice, the actual reference level is the same for all piston-cylinder modules, a reference level offset is applied when a hollow piston is used. The reference level offset is included in the piston-cylinder file (see Section 3.11.1.1) and corrects the reference level back to the reference point marked on the mounting post.**

❍ **OPERATION**

To access the HEAD function, press **[HEAD]**. The display is:

```
Edit DUT head height
95 cm          N2
```

2 1

1. Test fluid currently specified for the head correction.
2. Entry field for head height (1 to 999 cm or in.).

Entering a value of zero turns the HEAD function OFF. Entering a value other than zero turns the HEAD function ON using the height entered. Pressing **[ESCAPE]** returns to the main run screen with NO change to the current head setting.

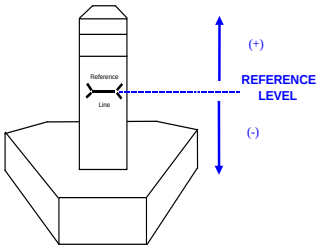

원문: Fluke Calibration PG7302 메뉴얼(영문) · 제조사 원문 자료입니다. 사양은 제조사 사정에 따라 변경될 수 있습니다.

Note

- **The reference height of PG7000 pressure definition is the bottom of the piston in mid-stroke float position. This position is marked on the piston-cylinder module mounting post and on the optional AMH, mass automated handler. The DUT head height should be entered as a positive value if the device or system under test is higher than the PG7000 reference level and negative if it is lower.**
- **To change units of DUT head height between inches and centimeters and to change the test fluid, press [SPECIAL] and select <3Head> (see Section 3.11.3).**
- **When the HEAD function is ON (DUT head value different from 0), the application of a head correction is indicated by <h> in the right side of the top line of the MAIN run screen (see Section 3.7). When the HEAD function is OFF, the <h> is NOT shown. PG7000's also have a separate head correction to compensate for the deviation between the current piston position and mid-stroke (see Section 3.11.3.4). This PISTON head can be turned ON and OFF (see Section 3.11.3.4).**

3.9.8 [ROTATE]

❍ PURPOSE

To turn **automatic** control of motorized piston rotation (acceleration and brake) ON and OFF.

Note

See Section 3.9.13 for information on manual control of motorized piston rotation.

❍ PRINCIPLE

The motorized piston rotation system is used to start or increase piston rotation rate when the piston is floating. It is also used to stop piston rotation when necessary, for example before manipulating mass to set a new pressure. The system operates by engaging a motor driven belt around the bottom of the mass loading bell to accelerate or brake the rotation rate of the mass bell and piston it is loaded on. The motorized rotation system can engage with the piston at any position in its stroke and at any rotation speed with minimal impact on piston position and the defined pressure. When the motorized rotation system disengages, the piston is completely free.

With automatic motorized rotation ON, the motorized rotation system engages and disengages automatically as needed when the piston is floating to maintain the piston rotation rate above the minimum rate *Ready* limit (see Section 3.4.2). The rotation rate is measured by PG7000 on board sensors and the rotation rate limits are set in the file of the active piston cylinder (see Section 3.11.1.1). Whenever the piston is floating, the motorized rotation system will attempt to maintain the piston rotation rate within the *Ready* limits (except under the cutoff mass load of 3 kg, at which the low limit is reduced to minimum to maximize free rotation time. The piston rotation *Ready/Not Ready* indication character indicates *Not Ready* to alert the operator when the motorized rotation system is about to engage. The rotation system will not engage when the current mass load is less than the mass of the piston + mass loading bell.

The motorized rotation system is also used to brake and stop rotation when starting a new pressure point. If the piston is floating and rotating when **[ENTER/SET P]** is pressed, the motorized rotation system engages at a speed near the rotation rate of the piston and then brakes it to a stop. Piston rotation is stopped to avoid loading and unloading masses on the rotating piston and to avoid stopping rotation by friction between the piston and the piston end of stroke stops.

With automatic motorized rotation OFF, the motorized rotation system engages only when actuated by the operator. Pressing **[↻]** accelerates rotation or **[↻]** followed by **[←]** stops rotation (see Section 3.9.13).

© 2011 Fluke Calibration

원문: Fluke Calibration PG7302 메뉴얼(영문) · 제조사 원문 자료입니다. 사양은 제조사 사정에 따라 변경될 수 있습니다.

we measure, we calibrate, we validate.
㈜테솔 · www.tessol.com TS-TL-FLK-093 83 / 214
KOLAS 국제공인교정기관 · ISO/IEC 17025

TS-TL-FLK-093

Automatic motorized rotation is generally left ON for normal operation. It is turned OFF in situations where rotation system actuation independent of operator initiative is undesired (e.g. when performing a crossfloat intercomparison with another piston gauge).

❍ **OPERATION**

To access the AutoRotate functions, press **[ROTATE]**. The display is:

```
AutoRotate OFF
1on 2pre-decel
```

<AutoRotate ON> or **<AutoRotate OFF>** indicates the current state of AutoRotate. Use **<1on>** or **<1off>** to change the state.

When automated rotation is OFF, the PG7000 motorized rotation system will only engage if the operator presses **[↻]** or **[↻]** followed by **[←]** (see Section 3.9.13).

When automated rotation is ON, the automated rotation system engages automatically. When the piston is floating, it engages as needed to maintain the piston rotation rate above the *Ready* limit (see Section 3.4.2). When **[ENTER/SET P]** is pressed, it engages to stop rotation before masses are loaded and/or the pressure is adjusted (this function can be turned ON and OFF, see Section 3.9.8.1). Manual control using **[↻]** and **[↻]** followed by **[←]** is also still active.

Note

- **Automatic motorized piston rotation is dependent on PG7000's measurements of piston position and rotation rate. These measurements are only available when the mass loading bell is installed on the piston. Automatic piston rotation is suspended when the current PG7000 mass load does not include the mass loading bell.**
- **Proper operation of the rotation system is dependent on PG7000's measurements of piston position. When using AutoGen, be sure that the piston position indication system is properly adjusted (see Section 5.2.2).**
- **When PG7601 is operating in absolute by vacuum mode using the internal vacuum sensor to measure reference vacuum, automatic motorized piston rotation will not engage until the reference vacuum value is within the *Ready* limit (see Section 3.4.3).**

3.9.8.1 <2PRE-DECEL>

❍ **PURPOSE**

To turn ON and OFF a function that causes the automated rotation system to begin the piston rotation deceleration when **[ENTER/SET P]** is pressed rather than at the time mass is to be loaded.

On a PG7000 Platform equipped with motorized rotation, when AutoRotate is on, the piston rotation deceleration function is used to stop rotation before masses are loaded or pressure is adjusted. As the deceleration function can take up to one minute to execute, it can be initiated the moment that **[ENTER/SET P]** is pressed to enter a new pressure or mass target. The deceleration function then runs while the new target value is being entered. However, when the next target does not require changing main masses, it may not be necessary to stop piston rotation. In these cases, the running the deceleration function is probably not desired and it is not beneficial for piston deceleration to initiate it when **[ENTER/SET P]** is pressed. For this reason, the function to start piston deceleration when **[ENTER/SET P]** is pressed can be turned ON and OFF.

If pre-deceleration is ON and AutoRotate is ON, piston rotation deceleration always initiates immediately when **[ENTER/SET P]** is pressed.

If pre-deceleration is OFF and AutoRotate is ON, piston rotation deceleration occurs after entry of the pressure or mass target value and only if the new target requires changing main masses with a manual mass set or operation AMH if an automated mass handling system is active.

원문: Fluke Calibration PG7302 메뉴얼(영문) · 제조사 원문 자료입니다. 사양은 제조사 사정에 따라 변경될 수 있습니다.

❍ **OPERATION**

To turn ON and OFF the function that causes stopping piston rotation to initiate when **[ENTER/SET P]** is pressed, press **[ROTATE]**, **<2pre-decel>**. The cursor is on the choice corresponding to the current state. Select **<2on>** for piston rotation deceleration to initiate when **[ENTER/SET P]** is pressed. Select **<1off>** for deceleration to initiate only after entry of a new pressure or mass target and only if main masses need to be moved or AMH automated mass handling needs to be operated. The default is **<2on>**.

3.9.9 [GEN] (OPTIONAL)

❍ **PURPOSE**

To turn ON and OFF automated pressure generation/control and view and edit automated pressure control settings. Requires that an automated pressure generation/control component be included in the PG7000 system and properly configured (see Section 2.4.9).

❍ **PRINCIPLE**

PG7000s support automated pressure generation/control components. These components, when properly configured and interfaced with the PG7000 platform, are controlled by the PG7000 platform to automatically set and adjust pressure to float the piston. Automated pressure generation and control components are interfaced via the PG7000 platform's COM3 RS232 port (see Section 3.11.5.1).

Once an automated pressure generation/control component has been properly configured and interfaced with the PG7000 platform, the functions under **[GEN]** are used to turn automated pressure generation/control ON and OFF and to set operating parameters associated with automated pressure control.

With automated pressure generation/control ON, PG7000 uses the automated control component to float and refloat its piston when a pressure or mass value is entered. **[ENTER/SET P]** is pressed to initiate a new command. The automated control function is suspended when any function key is pressed, when entering remote mode or if automated pressure control is turned OFF.

After a target pressure or mass has been entered (locally or remotely) and the required mass has been loaded, the GEN function controls the pressure control component as needed to float the PG7000 piston at the piston float target (see Section 3.9.9.1) and refloat it if necessary. If the piston moves beyond the high or low piston position *Ready* limit the GEN function refloats it to the piston float target. The piston float target and piston position ready limits are user adjustable (see Section 3.10 <6READY). See Section 3.5, Figure 8 for a description piston position stroke zones and limits.

With automated pressure generation/control OFF, PG7000 leaves the automated pressure generation/control component idle and does not attempt to use it.

If an automated pressure control component is included in the PG7000 system, automated pressure generation/control is generally left ON for normal operation. It is turned OFF in situations where pressure control independent of operator initiative is undesired (e.g. when performing a crossfloat intercomparison with another piston gauge).

The **[GEN]** menu includes:

1. Turning the GEN function ON and OFF.

2. The adjustable piston float target that defines the position to which the piston is set when floated (see Section 3.9.9.1).

3. A choice to have the piston raised to the top of the stroke before manipulating mass using an AMH automated mass handler (see Section 3.9.9.2).

4. Viewing and setting the UPPER LIMIT of the automated pressure generation component to avoid accidental overpressure (see Section 3.9.9.2).

5. Viewing and setting the assumed pressure controller tolerance used to determine pressure setting limits when floating the PG7000 piston (see Section 3.9.9.4).

6. A choice to not readjust piston position if the piston is already floating within the *Ready* position limit after a new target is executed (see Section 3.9.9.5).

© 2011 Fluke Calibration

원문: Fluke Calibration PG7302 메뉴얼(영문) · 제조사 원문 자료입니다. 사양은 제조사 사정에 따라 변경될 수 있습니다.

TS-TL-FLK-093

we measure, we calibrate, we validate.
㈜테솔 · www.tessol.com TS-TL-FLK-093 85 / 214
KOLAS 국제공인교정기관 · ISO/IEC 17025

7. Viewing and setting the volume of the system to which the PG7000 system is connected (PG7302 and PG7307 only) (see Section 3.9.9.6).

❍ **OPERATION**

To access the GEN functions, press **[GEN]**. The display is:

```
AutoGen OFF    1on
2target 3raise 4UL ↓
5tol 6refloat
```

<AutoGen ON> or **<AutoGen OFF>** indicates the current state of AutoGen. Use **<1on>** or **<1off>** to change the state.

If automated pressure control is OFF, PG7000 attempts to turn automated pressure control ON when **<1on>** is pressed. To do so, communication must be established with a valid automated pressure control component over its COM3 RS232 port (see Section 3.11.5.1). If PG7000 **is not able** to establish communication with a valid pressure control component, **<P control timeout, autogen off>** is displayed momentarily. Correct the communications error with the pressure control component and try again. If PG7000 **is able** to establish communications with a valid automated pressure control component, **<Turning ON automated generation>** is displayed momentarily and automated control is turned ON.

The PG7000 automated control function will attempt to float the piston within the piston position ready limits (see Section 3.4.1) after any *mass to pressure* or *pressure to mass* command once mass loading has been confirmed. It will continue to attempt to float its piston until **[ENTER]** is pressed to initiate a new command, a function key is pushed to interrupt AugoGen, or automated pressure control is turned OFF using **[GEN]**.

If automated pressure control is ON and **<1off>** is pressed, **<Turning OFF automated generation>** is displayed momentarily and automated control is turned OFF. The PG7000 automated control function is inactive.

Note

- **Automated pressure generation/control ON is indicated by a <G> in the right of the top line of the PG Terminal main run screen. The <G> flashes when automated generation is active (see Section 3.7).**
- **Proper operation of the automated pressure generation/control function is dependent on PG7000's measurements of piston position. When using AutoGen, be sure that the piston position indication system is properly adjusted (see Section 5.2.2).**
- **Proper operation of the automated pressure generation/control function is dependent on PG7000's measurements of piston position and rotation rate. These measurements are only available when the mass loading bell is installed on the piston. Automated pressure generation/control is automatically turned off when the PG7000 entered pressure or mass load does not include the mass loading bell.**
- **Automated pressure generation/control is not available when operating in PG7000 high line differential pressure mode (see Section 3.9.4.2).**

⚠ Caution

To help protect against accidental overpressure, when using automated pressure generation/control, set the upper limit (UL) of the pressure control system using [GEN], <4UL> (see Section 3.9.9.3).

3.9.9.1 <2target>

❍ **PURPOSE**

To adjust the distance from midstroke to which the piston position must be set before the automated generation system considers the piston floating process complete (see Sections 3.9.9, 3.5).

원문: Fluke Calibration PG7302 메뉴얼(영문) · 제조사 원문 자료입니다. 사양은 제조사 사정에 따라 변경될 수 있습니다.

Note

With PG7202, AutoGen pressure control using the PPCH-G pressure control does not stop when the target piston position is reached. The PPCH-G thermal pressure control unit (TPCU) is used continuously to attempt to maintain the piston at the target position. The default target piston position for a PG7202 is mid-float position (0.0 mm).

❍ **OPERATION**

To adjust the AutoGen piston float target press **[GEN]**, **<2target>**. Edit the value of the target as desired. The default is + 1 mm (0 mm for PG7202). The entry should not exceed + 2.5 mm.

3.9.9.2 <3raise>

❍ **PURPOSE**

To turn ON and OFF a function that causes the automated generation component (see Section 3.9.9.) to raise the PG7000 piston to the top of its stroke before automated mass manipulation by an AMH automated mass handler. This can avoid a large pressure change which may occur in certain circumstances when AMH lifts the mass load off of the piston.

❍ **OPERATION**

To turn ON and OFF the raise piston before mass loading fuction, press **[GEN]**, **<3raise>**. The cursor is on the choice corresponding to the current state. Select **<1no>** for the piston not to be raised or **<2yes>** to raise the piston. The default is **<1no>**.

3.9.9.3 <4UL>

❍ **PURPOSE**

To read and/or set the UPPER LIMIT (UL) of the automated pressure generation component used by AutoGen. This function is used to protect against accidential overpressure when using the PG7000 automated pressure generation function (see Section 3.9.9 and the generation component's Operation and Maintenance Manual, UL section)

❍ **OPERATION**

To view or set the UPPER LIMIT of the automated pressure control component used by AutoGen, press **[GEN]**, **<4UL>**.

If AutoGen is not currently ON, the control component UPPER LIMIT cannot be accessed and an error message is displayed.

If AutoGen is ON, the current UPPER LIMIT of the automated control component is displayed and can be edited.

The automated pressure control component will abort pressure generation and beep repeatedly if its UPPER LIMIT is exceeded.

3.9.9.4 <5tol>

❍ **PURPOSE**

To read and/or set the pressure measuring tolerance of the pressure controller used by AutoGen to automate pressure control.

Note

This function is used only when the pressure controller is a PPC3.

© 2011 Fluke Calibration

원문: Fluke Calibration PG7302 메뉴얼(영문) · 제조사 원문 자료입니다. 사양은 제조사 사정에 따라 변경될 수 있습니다.

TS-TL-FLK-093

we measure, we calibrate, we validate.
㈜테솔 · www.tessol.com TS-TL-FLK-093 87 / 214
KOLAS 국제공인교정기관 · ISO/IEC 17025

❍ **PRINCIPLE**

The control tolerance function can be used to reduce the time required to set pressure and float the PG7000 piston when the pressure controller used is significantly more accurate than the default tolerance value. The tolerance can also be described as the degree of agreement between the pressure control's pressure measurement and the pressure value set by the PG7000 when its piston is floating. In general, making the tolerance smaller reduces the time required to float the piston and making the tolerance wider increases the time. However, if the tolerance is set too small so that it does not correctly reflect the degree of agreement between the pressure controller pressure measurement and the PG7000's floating piston, overshoot of the piston float point or inability to float the piston will result.

The pressure controller tolerance determines, when applicable:

a) the distance from the actual pressure target that pressure is set before the AutoGen function begins to seek movement of the piston.

b) the amount of pressure overshoot that must occur before "forced rotation" is used to overcome possible friction between the piston and the cylinder.

Note

This function is used only when the pressure controller is a PPC3.

❍ **OPERATION**

To view or set the pressure control tolerance, press **[GEN]**, **<5tol>**.

The current value of the pressure control tolerance is displayed. The value is in % of full scale of the pressure controller. If the pressure controller is AutoRanged, the AutoRange maximum pressure is used as full scale (see the pressure controller's Operation and Maintenance Manual).

The default tolerance value is 0.05% of full scale.

Edit the tolerance value if desired. Do not make the pressure tolerance less than the worse case agreement between the pressure controller pressure measurement and the pressure indicated by the PG7000 when its piston is floating.

3.9.9.5 <6refloat>

❍ **PURPOSE**

To turn ON and OFF a function that causes the automated generation component (see Section 3.9.9.) to refloat the piston to the target piston position after a new pressure or mass target is entered, even if the piston is already floating within the piston position *Ready* limits. When Refloat is ON, the piston is always refloated to the target piston position after a new pressure or mass target command. This gives the full stroke of the piston to drop before refloat is necessary. When Refloat is OFF, the time required to activate the pressure control component and refloat the piston is eliminated if it is not needed. This can result in very rapid pressure setting when the piston is still floating after a mass load change.

❍ **OPERATION**

To turn ON and OFF the Refloat function, press **[GEN]**, **<6refloat>**. The cursor is on the choice corresponding to the current state. Select **<1no>** for the piston NOT to be controlled to the target position after a pressure or mass command if the piston is already in the *Ready* piston position limits. Select **<2yes>** for the piston to always to be controlled to the raise the piston. The default is **<2yes>**.

3.9.9.6 <7Vol>

❍ **PURPOSE**

To read and/or set the volume of the system to which the PG7000 system is connected.

원문: Fluke Calibration PG7302 메뉴얼(영문) · 제조사 원문 자료입니다. 사양은 제조사 사정에 따라 변경될 수 있습니다.

TS-TL-FLK-093

we measure, we calibrate, we validate. ㈜테솔 · www.tessol.com TS-TL-FLK-093 88 / 214

KOLAS 국제공인교정기관 · ISO/IEC 17025

Note

This function is used available only with PG7302 and PG7307.

❍ **PRINCIPLE**

The piston floating routines of PG7302 or PG7307 oil operated piston gauge using a PPCH automated pressure controller are highly dependent upon the volume of the test system into which pressure is being controlled. The VOL function is used to specify the test volume so that the PG7302 or PG7307 may scale the PPCH rates properly for the volume.

Operating with an improperly specified volume will cause the piston floating routine to be either very slow (specified volume to small) or to overshoot (specified volume too large).

Note

- **If the test system volume is not known, the PPCH volume determination function may be used to measure it. This function is run directly from the PPCH front panel (see the PPCH Operation and Maintenance Manual, {INTERNAL], <1CONFIG>).,**
- **The test volume can be read or set remotely (see Section 4.3.4,).**

❍ **OPERATION**

To view or set the test volume, press **[GEN]**, **<7vol>**.

The current volume value is displayed. The value is in cubic centimeres (cc).

The default volume is 30 cc. The maximum volume is 300 cc.

Edit the volume value if desired.

3.9.10 [RES]

❍ **PURPOSE**

To set the resolution with which PG7000 loads mass in response to pressure or mass commands (see Section 3.9.12).

❍ **PRINCIPLE**

PG7000 piston-cylinders are sized such that there is a whole number, nominal relationship between mass loaded on the piston in kilograms [kg] and the pressure at which the piston will float in kilo Pascal [kPa] or Mega Pascal [MPa]. This relationship is called the *pressure to mass conversion coefficient* and is expressed as kPa/kg or MPa/kg. The *pressure to mass conversion coefficient* is marked on the cap of each piston.

PG7000 mass sets are made up of masses in multiples and submultiples of the kilogram making it simple to load mass values rounded to 0.01 g, 1 g, 10 g or 0.1 kg.

When using PG7000 to define pressure, the desired pressure value is entered (see Section 3.9.11) and PG7000 prompts the user with the mass value to be loaded. Due to the many variables that influence the exact pressure to mass relationship for a piston-cylinder (even though there is nominally a whole number mass to pressure relationship) the mass value to load to reach exactly the pressure requested is always an odd value. Therefore, defining the exact pressure value requested always requires loading mass with 0.01 g resolution.

When it is acceptable for the pressure values defined to not be exactly the nominal pressure value of the point, operation can be simplified and mass loading errors can be reduced by loading mass with a lower level of resolution and using the pressure that the lower level resolution mass load generates. For example, on a piston-cylinder with a nominal pressure to mass relationship of 10 kPa/kg, defining a pressure of exactly 100 kPa, nominally requires loading 10 kg of mass. However, once all the influences on the measurement are taken into consideration, the actual mass to load to define exactly 100 kPa will not be 10.00000 kg, it will be a value near 10 kg such as 9.99731 kg. This value is difficult to load, as it requires relatively complex mass accounting

© 2011 Fluke Calibration

원문: Fluke Calibration PG7302 메뉴얼(영문) · 제조사 원문 자료입니다. 사양은 제조사 사정에 따라 변경될 수 있습니다.

TS-TL-FLK-093

we measure, we calibrate, we validate. ㈜테솔 · www.tessol.com TS-TL-FLK-093 89 / 214

KOLAS 국제공인교정기관 · ISO/IEC 17025

and the manipulation of very small sub-gram masses. To avoid handling a difficult, odd mass value, one might instead decide to load 10 kg and use whatever pressure results as the reference pressure. In this example, loading 10 kg rather than 9.99731 kg would result in defining 100.0269 kPa rather than 100.0000 kPa. The pressure defined is only very slightly different from the nominal value and there is no additional uncertainty if that value is used. The savings in time and reduction of possible mass loading errors are significant.

The PG7000 RES function is used to cause PG7000 to automatically calculate mass loads to a whole number value starting at 0.01 g and increasing in powers of 10 to 0.1 kg. This function is very useful to make operation more convenient and less error prone when it is not imperative that the pressure defined by PG7000 be exactly the nominal pressure of the test or calibration sequence.

Note

The mass loading resolution of AMH automated mass handling systems is 0.1 kg. The default mass loading resolution when AMH is initialized is 0.1 kg. If resolution finer than 0.1 kg is set when AMH is active, the AMH loads the required mass value wit 0.1 kg resolution and the operator is prompted with an instruction to load the trim mass under 0.1 kg. For fully automated operation, the mass loading resolution should always be set to 0.1 kg.

❍ OPERATION

To access the resolution function, press **[RES].** The display is:

```
Mass loading rsltn:
0.01 g      < and >
```

Press the **[←]** and **[→]** keys to select the desired level of resolution. **[←]** decreases resolution and **[→]** increases resolution. Press **[ENTER]** to set the selected resolution and return to the main run screen. The resolution range is from 0.01 g to 0.1 kg in powers of 10.

Note

- **The RES setting has no affect in *mass to pressure* mode. The RES setting only affects the resolution of the mass commands that result from pressure entries in *pressure to mass* mode (see Section 3.9.12).**
- **In PG7000 high line differential pressure mode (see Section 3.9.4.2), line pressures setting is not affected by the RES setting; line pressures are always set with 0.1 kg resolution. Differential pressure mass loading resolution is determined by the RES setting.**

3.9.11 [ENTER/SET P] from Run Screen

❍ PURPOSE

To enter and execute *pressure to mass* or *mass to pressure* commands (see Section 3.9.12).

❍ PRINCIPLE

PG7000 can calculate and display the mass to be loaded to achieve an entered pressure value (*pressure to mass* mode), or the pressure resulting from an entered mass load (*mass to pressure* mode). The P OR M function is used to set *pressure to mass* or *mass to pressure* mode (see Section 3.9.12).

Pressing **[ENTER/SET P]** from any run screen (MAIN, SYSTEM or AMBIENT) accesses the pressure or mass entry screen which allows the command value to be entered and proceeds through the sequence to set or read the pressure defined by PG7000.

❍ OPERATION

To access the pressure or mass entry screen, press **[ENTER/SET P]** from any run screen. The sequence after **[ENTER/SET P]** has been pressed varies between *mass to pressure* and *pressure to mass* mode. The mode is selected by pressing **[P OR M]** (see Section 3.9.12). See Section 3.9.11.1 for details on **[ENTER/SET P]** in *pressure to mass* mode and Section 3.9.11.2 for *mass to pressure* mode. See immediately below for typical operational sequences in gauge and absolute modes. See Section 3.9.4.1, Operating in Differential Mode, for typical differential mode operational sequence.

원문: Fluke Calibration PG7302 메뉴얼(영문) · 제조사 원문 자료입니다. 사양은 제조사 사정에 따라 변경될 수 있습니다.

TESSOL Technical Library

TS-TL-FLK-093

we measure, we calibrate, we validate.

㈜테솔 · www.tessol.com TS-TL-FLK-093 90 / 214

KOLAS 국제공인교정기관 · ISO/IEC 17025

Typical Gauge and Absolute by ATM Mode Operational Sequence

❶ Press **[MODE]** and select gauge or absolute by ATM mode as desired (see Section 3.9.4).

❷ Press **[P OR M]** and select *pressure to mass* or *mass to pressure* mode (see Section 3.9.12).

❸ Press **[ENTER/SET P]** and enter a pressure or mass value. If the piston is floating and AutoRoate is ON, the braking function engages to stop piston rotation (see Section 3.9.8).

❹ Load mass as instructed (see Section 3.6). If an AMH automated mass handling system is active, the mass is loaded automatically with resolution of 0.1 kg.

❺ Use the system pressure control component to float the PG7000 piston. If the AutoGen function is ON, the automated pressure control component floats the piston automatically (see Section 3.9.9).

❻ When PG7000 indicates *Ready* on all *Ready/Not Ready* indicators (see Section 3.4), take a DUT reading at the pressure indicated on the top line of PG7000 display.

❼ Repeat Steps ❸ through ❻ for each desired pressure value.

Typical Absolute by Vacuum Mode Operational Sequence (PG7601 Only)

❶ Press **[MODE]** and absolute by vacumm (avac) mode (see Section 3.9.4).

❷ Press **[P OR M]** and select *pressure to mass* or *mass to pressure* mode (see Section 3.9.12).

❸ Press **[ENTER/SET P]** and enter a pressure or mass value. If AutoRoate is ON, the braking function engages to stop piston rotation (see Section 3.9.8).

❹ Load mass as instructed (see Section 3.6). If an AMH automated mass handling system is active, the mass is loaded automatically to resolution of 0.1 kg.

❺ Install bell jar on PG7000, shut PG7000 vacuum vent valve, open vacuum reference shutoff valve. Wait for vacuum under bell jar to reach *Ready* condition (see Section 3.4.3).

❻ Use system pressure control component to float the PG7000 piston. If the AutoGen function is ON, the automated pressure control component floats the piston automatically (see Section 3.9.9).

❼ When PG7000 indicates *Ready* on all *Ready/Not Ready* indicators (see Section 3.4), take a DUT reading at absolute pressure indicated on the top line of the PG7000 display.

❽ Shut vacuum reference shutoff valve, open vacuum vent valve. Wait for pressure under bell jar to return to ambient. Remove bell jar. If an AMH automated mass handling system is active and mass loading resolution is 0.1 kg, the vacuum does not need to be broken and reestablished at each increment since the masses are moved automatically.

❾ Repeat Steps ❸ through ❽ for each desired differential pressure point.

3.9.11.1 [ENTER/SET P] in Pressure to Mass Mode

❍ PURPOSE

To enter and execute a *pressure to mass* command in *pressure to mass* mode (see Section 3.9.12).

❍ OPERATION

Put the PG7000 in *pressure to mass* operation mode (see Section 3.9.12), then press **[ENTER/SET P]** in any run screen. If automated rotation is on, the **<DECELERATING>** screen shows until piston deceleration is complete.

Note

Pressing [ENTER] in the run screen causes automated pressure generation to be suspended if ON (see Section 3.9.9) and AutoRotate to stop piston rotation if ON (see Section 3.9.8). When [ENTER] is pressed to confirm mass entry, automated pressure generation and/or motorized rotation resume.

© 2011 Fluke Calibration

원문: Fluke Calibration PG7302 메뉴얼(영문) · 제조사 원문 자료입니다. 사양은 제조사 사정에 따라 변경될 수 있습니다.

TS-TL-FLK-093

we measure, we calibrate, we validate.
㈜테솔 · www.tessol.com TS-TL-FLK-093 91 / 214
KOLAS 국제공인교정기관 · ISO/IEC 17025

The display is:

1. Current measurement mode (see Section 3.9.4).
2. Current pressure unit of measure (see Section 3.9.3).
3. Entry field for the target value of pressure to be set.

```
Target pressure:
100.0000 kPa a
```

3 2 1

Use the numerical keys and editing keys to enter the target pressure value desired.

Press **[ENTER/SET P]** to process the target pressure value. If the pressure value entered cannot be executed, an explanatory error message is displayed momentarily and operation returns to the target pressure entry screen with the previous target pressure value displayed. If the target pressure value entered is valid, the value is processed and operation proceeds to the mass loading instruction screen. The display is:

1. Mass to load using trim masses.
2. Nominal mass to load using main and fractional masses.

```
Load nominal mass:
10.0 kg and 3.17 g
```

2 1

Note

If an AMH automated mass handling system is active and mass loading resolution is set to 0.1 kg, the AMH loads the mass automatically. As it does, the steps of its operation are displayed. If resolution is set to higher than 0.1 kg, the operator is prompted to load the trim mass value.

With PG7601 in absolute by vacuum measurement mode (see Section 3.9.4), the instruction is **<Load mass & vac:>** indicating that the nominal mass value should be loaded and then the bell jar should be installed and vacuum established under the bell jar.

Load the nominal mass value following the protocol described in Section 3.6 and press **[ENTER/SET P]**. When **[ENTER/SET P]** is pressed confirming that the nominal mass value has been loaded, operation returns to the previous run screen with the new pressure target and mass value active.

⚠ Caution

To make "in tolerance" measurements, it is imperative that all mass loading instructions be executed following the protocol describe in Section 3.6. This ensures that the actual mass value resulting from a nominal mass loading command will be correct. Failure to load masses following the PG7000 mass loading protocol is likely to result in out of tolerance mass load determinations and pressure definitions.

Note

- **The resolution with which the *pressure to mass* mode mass loading instruction is given depends on the resolution set in the RES function. The RES function makes it possible to avoid loading high resolution mass values when it is not imperative that the pressure defined be exactly the nominal pressure requested (see Section 3.9.10).**
- **The *pressure to mass* loading instruction is given in nominal mass while the main run screen displays the true mass loaded. For this reason, the nominal mass loading instruction and the true mass displayed in the main run screen are slightly different values. This is normal operation (see Section 3.6).**

원문: Fluke Calibration PG7302 메뉴얼(영문) · 제조사 원문 자료입니다. 사양은 제조사 사정에 따라 변경될 수 있습니다.

3.9.11.2 [ENTER/SET P] in Mass to Pressure Mode

❍ PURPOSE

To enter and execute a *mass to pressure* command in *mass to pressure* mode (see Section 3.9.12).

❍ OPERATION

Put the PG7000 in *mass to pressure* operation mode (see Section 3.9.12), then press **[ENTER/SET P]** in any run screen. If automated rotation is on, the **<DECELERATING>** screen shows until piston deceleration is complete.

Note

Pressing [ENTER] in the run screen causes automated pressure generation to be suspended if ON (see Section 3.9.9) and AutoRotate to stop piston rotation if ON (see Section 3.9.8). When [ENTER] is pressed to confirm mass entry, automated pressure generation and/or motorized rotation resume.

The display is:

1. Edit field for total trim mass currently loaded.
2. Edit field for nominal mass of main and fractional masses currently loaded.

```
Load nominal mass:
10.0 kg and 3.17 g
```

2 1

Use the numerical and editing keys to enter the nominal mass to be loaded on the piston following the mass loading protocol described in Section 3.6. Press **[ENTER/SET P]** to process the mass value. If the mass value entered cannot be executed, an explanatory error message is displayed momentarily and operation returns to the mass entry screen with the previous nominal mass value displayed. If the mass value entered is valid, the value is processed and operation proceeds to the previous run screen with the new mass value active.

⚠ Caution

To make "in tolerance" measurements, it is imperative that the value of mass loaded on the piston be the NOMINAL mass following the protocol describe in Section 3.6. This ensures that PG7000 will correctly determine the true mass value loaded. Failure to enter nominal mass values following the PG7000 mass loading protocol is likely to result in out of tolerance mass load determination and pressure definitions.

Note

- **The setting of the RES function has no effect on the resolution of mass load entries in *mass to pressure* mode (see Section 3.9.10).**
- **The *mass to pressure* mass entry is expressed in nominal mass while the MAIN run screen displays the true mass loaded. For this reason, the nominal mass loading instruction and the true mass displayed in the main run screen are slightly different values. This is normal operation (see Section 3.6).**

3.9.11.3 Commands for Zero Pressure, Ending a Test

Entering a value of zero as the target presure is a convenient way to end a test and vent the automated pressure control component when AutoGen is ON.

© 2011 Fluke Calibration

원문: Fluke Calibration PG7302 메뉴얼(영문) · 제조사 원문 자료입니다. 사양은 제조사 사정에 따라 변경될 수 있습니다.

we measure, we calibrate, we validate.
㈜테솔 · www.tessol.com TS-TL-FLK-093 93 / 214
KOLAS 국제공인교정기관 · ISO/IEC 17025

TS-TL-FLK-093

Entering a value of zero in *pressure to mass* mode causes the following sequence to occur:

❶ Stop piston rotation if AutoRotate is ON.

❷ Vent pressure control component if AutoGen is ON or prompt operator to vent.

❸ A special run screen displays reflecting that the PG7000 is at rest and the mass loading bell may not be installed. The display is:

1. **<?>** in ready/not ready indicator positions as status of piston is unknown since mass loading bell may not be installed.
2. Unknown pressure except in absolute by atmosphere measurement mode in which the current value of atmospheric pressure is displayed. This is the value of absolute by atmospheric pressure when the system is vented.
3. Unknown/meaningless mass load.
4. Unknown/meaningless piston position.

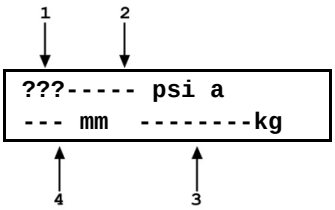

3.9.12 [P OR M]

❍ **PURPOSE**

To select between PG7000 *pressure to mass* or *mass to pressure* operation mode.

❍ **PRINCIPLE**

Piston gauges are generally used either to define desired pressure set points (e.g. when applying reference pressures to a device to be calibrated) or to measure a static pressure (e.g. when performing a crossfloat intercomparison with another piston gauge). PG7000s support these two typical situations with two operating modes: *pressure to mass* and *mass to pressure.*

In *pressure to mass* operating mode, the operator enters target pressure values and the PG7000 provides instructions of the mass to load to achieve the desired target pressure.

In *mass to pressure* operating mode, the operator enters the mass currently loaded and the PG7000 determines the pressure resulting from the current mass load. *Mass to pressure mode* is also useful to determine the true mass resulting from a nominal mass load (see Section 3.6).

The P OR M function is used to set the PG7000 operating mode to either pressure to mass or mass to pressure.

❍ **OPERATION**

Note

For details on *pressure to mass* and *mass to pressure* operation, see Section 3.9.11.

To access the P OR M function, press **[P OR M]**, the display is:

```
Select entry mode:
1pressure 2mass
```

Selecting **<1pressure>** activates *pressure to mass* mode and returns to the previous run screen.

Selecting **<2mass>** activates *mass to pressure* mode and returns to the previous run screen.

3.9.13 [↻] and [↻], [←]

❍ **PURPOSE**

To activate motorized piston rotation manually.

❍ **PRINCIPLE**

Motorized rotation engages and disengages to rotate or stop the rotation of the PG7000 piston.

원문: Fluke Calibration PG7302 메뉴얼(영문) · 제조사 원문 자료입니다. 사양은 제조사 사정에 따라 변경될 수 있습니다.

TESSOL Technical Library

TS-TL-FLK-093

we measure, we calibrate, we validate.
KOLAS 국제공인교정기관 · ISO/IEC 17025

Motorized rotation can be set to operate automatically to maintain the piston within *Ready* condition rotation rate limits when the piston is floating and stop rotation before changing the pressure or mass load (see Section 3.9.8). Motorized rotation can also be engaged manually to accelerate or brake piston rotation at any time under direct operator control.

[↻] is used for momentary acceleration of piston rotation. **[↻]** followed by **[←]** is used to start a function that stops piston rotation.

❍ **OPERATION**

To momentarily engage the motorized piston rotation system and accelerate the piston, press **[↻]** from any run screen. If PG7000 is equipped with motorized rotation, the motorized rotation system engages and remains engaged until maximum rotation rate has been achieved or the key is released.

The display is a modified version of the 1st system run screen to indicate the piston rotation is being accelerated while showing rotation rate and position:

1. Current piston rotation rate.
2. Current rate of piston vertical displacement.
3. Current piston position.

```
1
12 rpm ACCELERATING
+ 2.05 mm    0.1/min
3            2
```

To start the piston braking function press and hold **[↻]**, then press **[←]**. If PG7000 is equipped with motorized rotation, the motorized rotation system engages and stays engaged until the piston rotation is stopped. Once the braking function starts the keys may be released and the function will complete unless **[ESCAPE]** is pressed.

The display is a modified version of the 1st system run screen to indicate the piston rotation is being decelerated while showing rotation rate and position:

1. Current piston rotation rate.
2. Current rate of piston vertical displacement.
3. Current piston position.

```
1
48 rpm DECELERATING
+ 2.05 mm    0.1/min
3            2
```

To interrupt the piston rotation braking routine, press **[ESCAPE]**.

Note

- **Most PG7000 platforms produced before 2006 use a solenoid based rotation actuation system. The system is protected against overloading. If the duty cycle becomes excessive, motorized rotation cuts OFF and remains off for a 25 second delay. During the cutoff time, [↻] has no effect.**
- **The motorized rotation system can be set to operate automatically based on current piston position and rotation rate. See Section 3.9.8 for information.**
- **In PG7000 high line differential mode (see Section 3.9.4.2), pressing [↻] on the reference PG7102 engages motorized rotation on both the reference and tare PG7000s.**

© 2011 Fluke Calibration

원문: Fluke Calibration PG7302 메뉴얼(영문) · 제조사 원문 자료입니다. 사양은 제조사 사정에 따라 변경될 수 있습니다.

TS-TL-FLK-093

we measure, we calibrate, we validate.
㈜테솔 · www.tessol.com TS-TL-FLK-093 95 / 214
KOLAS 국제공인교정기관 · ISO/IEC 17025

3.10 [SETUP] Menu

❍ **PURPOSE**

To select, view and edit the SETUP files that determine the source of the values that PG7000 uses in its calculation of defined pressure and as criteria for *Ready/Not Ready* condition determination.

❍ **PRINCIPLE**

PG7000 piston gauges perform continuous, real time calculations of the pressure defined by the floating piston under current conditions (see Section 7.2 for the details on the calculations applied). The calculations are used to determine the defined pressure displayed in the MAIN run screen, and to arrive at the mass to load value when a target pressure is entered in *pressure to mass* mode.

The equations that PG7000 uses to calculate pressure include many instrument and ambient variables. PG7000 allows the source of the value used for each variable to be defined. For example, the value of barometric pressure used to calculate current air density and to add to gauge pressure to define absolute pressure in *absolute by atmosphere* mode could come either from PG7000's internal sensor, an external barometer connected to PG7000's COM2, a user entered value or be set to standard atmospheric pressure. The PG7000 SETUP function allows the source (and in some cases the value) of the variables used in the pressure equations to be specified. In order to allow various combinations of sources and/or values to be setup and recalled, SETUP files can be created, stored, edited and recalled. The SETUP files also include certain variables used to determine PG7000 *Ready/Not Ready* status. Table 19 identifies the variables included in the SETUP file, the factory source setting for each variable and the default value for each variable.

Variable source and value selections are recorded in SETUP files. These files can be stored and recalled so that specific combinations of variable sources and/or values can be conveniently recalled. There are 20 SETUP files. File #1 is a factory SETUP file that cannot be edited. It includes the factory default variable choices and values.

Note

SETUP files, USER values and PG7000's calculation capabilities can be used to calculate defined pressure in specific conditions independent of actual PG7000 operation.

The SETUP function supports the following:

- View SETUP files (see Section 3.10.2);
- Create/edit SETUP files (see Section 3.10.3);
- Select active SETUP file (see Section 3.10.1).

원문: Fluke Calibration PG7302 메뉴얼(영문) · 제조사 원문 자료입니다. 사양은 제조사 사정에 따라 변경될 수 있습니다.

Table 19. SETUP File Choices, Factory Preferred Choice and Normal Value

VARIABLE	SOURCE CHOICES	FACTORY DEFAULT CHOICE	NORMAL VALUE
Atmospheric pressure	1. Internal 2. Normal 3. User 4. COM2	1. Internal	101.325 kPa (14.6959 psi)
Ambient temperature	1. Internal 2. Normal 3. User	1. Internal	20 °C
Ambient relative humidity	1. Internal 2. Normal 3. User	1. Internal	45 %RH
Piston-cylinder temperature	1. Internal 2. Normal 3. User	1. Internal	20 °C
Gravity	1. Local 2. Normal 3. User	1. Local	9.806650 m/s^2
Vacuum (PG7601 only)	1. Internal 2. Normal 3. User 4. COM2	1. Internal	0 Pa
Ready/Not Ready Piston position	1. User	1. User	± 2.5 mm from midfloat position (default)
Ready/Not Ready Maximum vacuum reference pressure in absolute by vacuum mode (PG7601 only)	1. User	1. User	5 Pa (default)

Note

The factory default SETUP choice is the SETUP choice setting for all variables in a new SETUP file. SETUP file #1 is fixed to factory SETUP choices and cannot be altered.

❍ **OPERATION**

To access the SETUP menu, press **[SETUP]** from the main run screen. The display is:

```
Current SETUP: #01
1select 2view 3edit
```

#nn in the upper right hand corner displays the number of the SETUP file that is currently active.

Select **<1select>** to select a different active SETUP file. Select **<2view>** to view the variable choices and values of the active SETUP file. Select **<3edit>** to create or edit a SETUP file.

See Sections 3.10.1 to 3.10.3 for detailed information on each SETUP function operation.

3.10.1 <1select>

❍ **PURPOSE**

To change the active SETUP file number.

© 2011 Fluke Calibration

원문: Fluke Calibration PG7302 메뉴얼(영문) · 제조사 원문 자료입니다. 사양은 제조사 사정에 따라 변경될 수 있습니다.

we measure, we calibrate, we validate.
KOLAS 국제공인교정기관 · ISO/IEC 17025

⚠ Caution

Changing the current SETUP file will change the source and in some cases the values of the variables used by PG7000 in calculating defined pressure. SETUP files should be selected and changed only by qualified personnel. Incorrect SETUP file selection may cause out of tolerance calculations and measurements. See Section 3.10, PRINCIPLE, for information on SETUP files and their use.

❍ **OPERATION**

To select a SETUP file number to make it the active SETUP file, press **[SETUP]** and select **<1select>**. In the following screen enter the number of the desired SETUP file and press **[ENTER]**. If a valid SETUP file number has been entered, operation returns to the previous run screen with the selected SETUP file number displayed and active.

Note

- **Entering an invalid SETUP file number causes an error message to be displayed briefly and returns to the select SETUP file screen.**
- **If the SETUP file selected specifies COM2 as the source of barometric pressure, PG7000 will attempt to read a barometer on COM2 when initializing the new SETUP file. If PG7000 is unable to read a barometer on COM2, a communications time out message is displayed briefly and operation returns to the select SETUP file screen. See Section 3.11.5.4 for information on configuring COM2 to read an external barometer.**

3.10.2 <2view>

❍ **PURPOSE**

To view the variable source choices and values of any SETUP file number.

❍ **OPERATION**

Note

- **Selecting <2view> SETUP allows the variable source choices and values of the active SETUP file for viewing only. <2view> does not make the viewed SETUP file active. To select the active SETUP file, press [SETUP] and select <1select>.**
- **See Table 19 for a listing of the source choices for each variable.**

To view an existing SETUP file, press **[SETUP]** and select **<2view>**. The display is:

```
View SETUP file:
#02
```

1. Entry field for number of SETUP file to be viewed. Defaults to SETUP file currently selected. Must be a number from 2 to 10.

Enter the desired SETUP file number and press **[ENTER]**.

If a valid SETUP file number is entered, the display is:

```
View #02 latmP 2ambT
3%RH 4PCT 5g 6READY↓
7vac
```

Select **<1atmP>** to view the atmospheric pressure variable source choice and current value. The value is displayed in the current pressure units (see Section 3.9.3).

Select **<2ambT>** to view the ambient temperature variable source choice and the current value. The value is displayed in degrees Centigrade **[°C]**.

Select **<3%RH>** to view the ambient relative humidity variable source choice and the current value. The value is displayed in %RH.

원문: Fluke Calibration PG7302 메뉴얼(영문) · 제조사 원문 자료입니다. 사양은 제조사 사정에 따라 변경될 수 있습니다.

TESSOL Technical Library

TS-TL-FLK-093

we measure, we calibrate, we validate.

㈜테솔 · www.tessol.com TS-TL-FLK-093 98 / 214

KOLAS 국제공인교정기관 · ISO/IEC 17025

Select **<4PCT>** to view the piston-cylinder temperature variable source choice and the current value. The value is displayed in degrees Centigrade **[°C]**.

Select **<5g>** to view the gravity variable source choice and the current value. The value is displayed in meters per second squared **[m/s^2]**.

Select **<6READY>** to view the values of *Ready/Not Ready* status criteria (see Section 3.4). These include:

<1Pposition>:	Piston position *Ready/Not Ready* limits (see Section 3.4.1). The value is displayed as a band in millimeters about mid-float position **[± mm]** (see Section 3.5).
<2vac> (PG7601 only):	Maximum reference vacuum pressure limit when operating in absolute by vacuum mode. The value is displayed in Pascal **[Pa]**.

Select **<7vac> (PG7601 only)**: to view the reference vacuum variable source choice and the current value. The value is displayed in Pascal **[Pa]**.

3.10.3 <3edit>

❍ **PURPOSE**

To edit an existing SETUP file and/or to create a new SETUP file.

Note

See Section 3.10, PRINCIPLE for information on SETUP files and their purpose.

❍ **OPERATION**

Note

- **SETUP file #1 is the factory preferred file and it cannot be edited.**
- **See Table 19 for a listing of the source choices for each variable.**

To edit an existing SETUP file or create a new SETUP file, press **[SETUP]** and select **<3edit>**. The display is:

```
Edit SETUP file:
#02
```

1

1. Entry field for number of SETUP file to be edited or created. Defaults to SETUP file currently selected. Must be a number from 2 to 10.

Enter the desired SETUP file number and press **[ENTER]**.

If a valid SETUP file number is entered, the display is:

```
Edit #02 latmP 2ambT
3%RH 4PCT 5g 6READY↓
 7vac
```

Selecting an item leads to the variable source choices menu for that item. The cursor is on the source choice that is currently selected in that SETUP file number. Select the desired variable source. The selection causes the variable choice selection to be made and returns to the edit menu. From the variable source choice menus, pressing **[ENTER]** or **[ESCAPE]** returns to the edit selection menu. This allows easy, discreet movement between variable source choices when editing a SETUP file.

Select **<1atmP>** to specify the atmospheric pressure variable source for the pressure values that are used to calculate ambient air density and to add to gauge pressure measurements to calculate absolute pressure in absolute by addition of atmosphere mode. Selecting **<1atmP>** offers the atmospheric pressure variable source choices:

<1internal>	Use real time readings from PG7000's on-board barometer.
<2normal>	Use a fixed value of 101.325 kPa (14.6959) psi.
<3user>	Use a fixed user entered value. If **<3user>** is selected, the user value must be entered, in the current pressure unit of measure (see Section 3.9.3).

© 2011 Fluke Calibration

원문: Fluke Calibration PG7302 메뉴얼(영문) · 제조사 원문 자료입니다. 사양은 제조사 사정에 따라 변경될 수 있습니다.

TS-TL-FLK-093

we measure, we calibrate, we validate.
KOLAS 국제공인교정기관 · ISO/IEC 17025
㈜테솔 · www.tessol.com TS-TL-FLK-093 99 / 214

<4COM2> Use real time readings from the device connected by RS232 to PG7000's COM2 port. The external barometer must be properly set up to communicate with PG7000 (see Section 3.11.5.4 for information on setting up to read an external barometer).

Note

For differential mode operation (see Section 3.9.4) the AtmP selection must be <4COM2>.

Select **<2ambT>** to specify the ambient temperature variable source for the temperature values that are used to calculate ambient air density. Selecting **<2ambT>** offers the temperature variable source choices:

<1internal>: Use real time readings from PG7000's on-board ambient temperature platinum resistance thermometer (in the Temperature - Humidity (TH) Probe on the platform rear panel).

<2normal>: Use a fixed value of 20 °C.

<3user>: Use a fixed user entered value. If **<3user>** is selected, the user value must be entered, in degrees Centigrade **[°C]**.

Select **<3%RH>** to specify the relative humidity variable source for the relative humidity values that are used to calculate ambient air density. Selecting **<3%RH>** offers the relative humidity variable source choices:

<1internal>: Use real time readings from PG7000's on-board relative humidity sensor (in the Temperature - Humidity (TH) Probe on the platform rear panel).

<2normal>: Use a fixed value of 45 %RH.

<3user>: Use a fixed user entered value. If **<3user>** is selected, the user value must be entered, in percent relative humidity **[%RH]**.

Select **<4PCT>** to specify the piston-cylinder temperature variable source for the temperature values that are used to compensate piston-cylinder effective area for temperature. Selecting **<4PCT>** offers the temperature variable source choices:

<1internal>: Use real time readings from PG7000's on-board piston-cylinder temperature platinum resistance thermometer (embedded in the piston-cylinder module mounting post).

<2normal>: Use a fixed value of 20 °C.

<3user>: Use a fixed user entered value. If **<3user>** is selected, the user value must be entered, in degrees Centigrade **[°C]**.

Select **<5g>** to specify the value of acceleration due to gravity that is used in calculating the force applied to the piston. Pressing **<5g>** offers the gravity variable source choices:

<1locall>: Use the fixed value of local gravity stored under **[SPECIAL]**, **<6gl>** (see Section 3.11.6).

<2normal>: Use a fixed value of 9.806650 m/s^2.

<3user>: Use a fixed user entered value different from the current local gravity value stored in the **[SPECIAL]**, **<6gl>** menu option. If **<3user>** is selected, the user value must be entered, in meters per second squared [m/s^2].

Select **<6READY>** to edit the values of *Ready/Not Ready* status criteria (see Section 3.4). These include:

<1position>: Piston position limits. Edit the fixed value, in millimeters **[mm]**, of the band around mid-float position within which the piston position is *Ready* (see Section 3.4.1). This also determines the limit at which the piston is refloated by the GEN function when GEN is ON (see Section 3.9.9).

<2vacl> (PG7601 only): Maximum reference vacuum pressure when operating in absolute by vacuum mode. Edit the value, in Pascal **[Pa]**, under which the reference vacuum must be for a vacuum *Ready* condition to occur (see Section 3.4.3).

원문: Fluke Calibration PG7302 메뉴얼(영문) · 제조사 원문 자료입니다. 사양은 제조사 사정에 따라 변경될 수 있습니다.

TS-TL-FLK-093

we measure, we calibrate, we validate.
㈜테솔 · www.tessol.com TS-TL-FLK-093 100 / 214
KOLAS 국제공인교정기관 · ISO/IEC 17025

Select **<7vac>** to specify the reference vacuum variable source for the value used for the pressure under the bell jar when calculating the absolute pressure defined in *absolute by vacuum* mode. Pressing **<7vac>** offers the reference vacuum variable source choices:

<1internal>: Use real time readings from PG7000's on-board vacuum gauge (mounted directly in the vacuum plate, under the mass load).

<2normal>: Use a fixed value of 0 Pa.

<3user>: Use a fixed user entered value. If **<3user>** is selected, the user value must be entered, in Pascal **[Pa]**.

<4COM2>: Use real time readings from or through the device connected by RS232 to PG7601's COM2 port. The external vacuum gauge must be properly set up to communicate with PG7601 (see Section 3.11.5.5 for information on setting up to read an external vacuum gauge).

3.11 [SPECIAL] Menu

❍ PURPOSE

The **[SPECIAL]** key accesses a menu of PG7000 functions and settings that are less commonly or not normally used in regular operation.

❍ OPERATION

To access the SPECIAL menu, press **[SPECIAL]** from the main run screen. This display is:

```
1PC/MS 2presU 3head
4prefs 5remote 6gl↓
7cal 8AMH 9reset
```

Note

Some screens, such as the SPECIAL menu, go beyond the two lines provided by the display. This is indicated by a flashing arrow in the second line of the display. Press the [←] and [→] keys to move the cursor to access the lines that are NOT visible or directly enter the number of the hidden menu choice if you know it.

Special menu choices include:

<1PC/MS>: Edit and view stored piston-cylinder module and mass set metrological information. Select mass set to be used (see Section 3.11.1).

<2presU>: Customize the pressure unit of measure choices available under **[UNIT]** (see Section 3.11.2).

<3head>: Change the height unit of measure and the fluid used in DUT head corrections; adjust the barometer head height; turn the automated piston position head correction ON and OFF (PG7302 only) (see Section 3.11.3).

<4prefs>: To access a menu of internal PG7000 operational preferences and functions including screen saver, sounds, time/date, instrument ID and user level protection (see Section 3.11.4).

<5remote>: Set up/modify PG7000 RS232 (COM1, COM2, COM3) and IEEE-488 interfaces. Test RS232 ports. Set up external barometer communications (see Section 3.11.5).

<6gl>: Set the value of local gravity used by PG7000 in reference pressure calculations when *gl* is specified as the gravity value in the active SETTINGS file (see Section 3.11.6).

<7cal>: View the output of and adjust PG7000 internal sensors and measurement systems (see Section 3.11.7).

<8AMH>: View the status of and directly control an AMH automated mass handler (see Section 3.11.8).

<9reset>: Access and execute various reset options (see Section 3.11.9).

© 2011 Fluke Calibration

원문: Fluke Calibration PG7302 메뉴얼(영문) · 제조사 원문 자료입니다. 사양은 제조사 사정에 따라 변경될 수 있습니다.

TS-TL-FLK-093

we measure, we calibrate, we validate.
㈜테솔 · www.tessol.com TS-TL-FLK-093 101 / 214
KOLAS 국제공인교정기관 · ISO/IEC 17025

3.11.1 <1PC/MS>

❍ PURPOSE

To perform the following piston-cylinder module and mass set metrological functions:

- View and edit piston-cylinder module metrological information.
- Create new piston-cylinder modules.
- View and edit mass set and mass loading bell information.
- Create new mass sets and mass loading bells.
- Select the active mass set and mass loading bell.

Note

See Section 3.9.2 for information on more direct access to selecting the active piston-cylinder module.

⚠ Caution

The piston-cylinder module and mass set information contained in <1PC/MS> is element specific metrological data. Uninformed or accidental altering of this information may lead to out of tolerance measurements. Piston-cylinder module and mass set information should only be edited by qualified personnel as part of the PG7000 calibration or recalibration process.

❍ PRINCIPLE

To calculate the pressure defined by its floating piston, PG7000 must have available the specific characteristics of the piston-cylinder module, mass set and mass loading bell that are being used. This information is entered, viewed and edited under **[SPECIAL]**, **<1PC/MS>**. This is also where the active mass and mass loading bell are selected.

The piston-cylinder module and mass set information required by PG7000 is reported on the Calibration Reports that are delivered with the metrological elements. When the PG7000 Platform and metrological elements are delivered together, the metrological elements information is entered by Fluke Calibration at the factory. If the metrological elements are delivered separately from the platform or after a recalibration when new data is available, the information must be entered or edited by the user.

❍ OPERATION

To access the piston-cylinder module, mass set and mass loading bell information, press **[SPECIAL]** and select **<1PC/MS>**. The display is:

```
1PC 2mass set
3mass bell
```

Select the type of metrological element that you would like to view, edit, create or select.

See Sections 3.11.1.1 to 3.11.1.7 for operation of specific piston-cylinder module, mass set and mass bell functions as follows:

- Create a new piston-cylinder module (see Section 3.11.1.1).
- Edit piston-cylinder module information (see Section 3.11.1.2).
- View piston-cylinder module information (see Section 3.11.1.3).
- Delete a piston-cylinder module (see Section 3.11.1.4).
- Select the active piston-cylinder module (see Section 3.11.1.5).
- Create a new mass set (see Section 3.11.1.6).
- Edit mass set information (see Section 3.11.1.7).
- View mass set information (see Section 3.11.1.8).
- Delete a mass set (see Section 3.11.1.9).
- Select a mass set (see Section 3.11.1.10).
- Add a mass loading bell (see Section 3.11.11).

원문: Fluke Calibration PG7302 메뉴얼(영문) · 제조사 원문 자료입니다. 사양은 제조사 사정에 따라 변경될 수 있습니다.

TESSOL Technical Library

TS-TL-FLK-093

we measure, we calibrate, we validate.

㈜테솔 · www.tessol.com TS-TL-FLK-093 102 / 214

KOLAS 국제공인교정기관 · ISO/IEC 17025

- Edit mass loading bell information (see Section 3.11.12).
- View the active mass loading bell (see Section 3.11.1.13).
- Delete a mass loading bell (see Section 3.11.1.14).
- Select a mass loading bell (see Section 3.11.1.15).

3.11.1.1 Create Piston-Cylinder Module

❍ **PURPOSE**

To create a new piston-cylinder module that will be available for selection from the **[P-C]** function key. Use this function when a new piston-cylinder module has been acquired.

Note

If the piston-cylinder module and PG7000 Platform were delivered together, the piston-cylinder module has already been entered at the factory. Before creating a new piston-cylinder module, press [P-C] to check if it already exists (see Section 3.9.2).

❍ **PRINCIPLE**

The PG7000 add and edit piston-cylinder module functions allow piston-cylinder metrological module variable values to be defined and stored. These values will be used by PG7000 in calculating defined pressure, piston-cylinder range and pressure to mass and mass to pressure values when the piston-cylinder module is made active using **[P-C]**. The information needed can be found in the calibration report for the piston-cylinder module.

Setting up or editing a piston-cylinder module requires specifying, in sequential order, the following:

❶ Serial number (S/N) **[nnnn]**.

❷ Effective area (Ae) at 0 pressure and 20 °C **[mm2]**.

❸ Piston temperature coefficient **[linear thermal expansivity/°C]**.

❹ Cylinder temperature coefficient **[linear thermal expansivity/°C]**.

❺ Effective area pressure coefficient **[change in Ae/MPa]**.

❻ Piston-cylinder surface tension effect **[N/m]**.

❼ Reference level offset **[mm]**.

❽ Piston assembly mass **[kg]**.

❾ Piston assembly apparent density **[kg/m3]**.

❿ Rotation rate ready limits **[rpm]**.

⓫ k(P) **[kg/mm/min]**.

⓬ Calibration report number **[nnnnnnnnn]**.

⓭ Calibration report date **[yyyymmdd]**.

❍ **OPERATION**

Note

- **Adding or editing a piston-cylinder module requires the user to specify a large number of variables in a series of data entry screens described below. For a summary of the piston-cylinder module data requirements in the order they are edited see PRINCIPLE in this section.**
- **PG7000 can store up to 18 piston-cylinder module (PC) files. When <3add> is selected and all the files have already been used, a warning is displayed. A file must be deleted before a file can be added.**

© 2011 Fluke Calibration

원문: Fluke Calibration PG7302 메뉴얼(영문) · 제조사 원문 자료입니다. 사양은 제조사 사정에 따라 변경될 수 있습니다.

TS-TL-FLK-093

we measure, we calibrate, we validate. ㈜테솔 · www.tessol.com TS-TL-FLK-093 103 / 214

KOLAS 국제공인교정기관 · ISO/IEC 17025

To create a new piston-cylinder module press **[SPECIAL]** , **<1PC/MS>** and select **<1PC>**, **<3add>**. A series of data entry menus will be presented. Edit each menu to reflect the correct information on the piston-cylinder module being added. Press **[ENTER]** after each entry to proceed to the next menu. Pressing **[ESCAPE]** at any point offers an **<Abandon edits?>** query and then returns to the **<1PC>** menu without saving any of the edited data or **[ENTER]** returns to the add piston-cylinder module process.

The data entry screens to add or edit a piston-cylinder module are, in order:

- **Serial number (S/N):** Edit the serial number using four digits. This value is marked on the piston cap. The default is **1**.
- **Effective area at 0 pressure and 20 °C:** Edit the value of the piston-cylinder effective area at 0 pressure and 20 °C. The value must be entered in square millimeters **[mm^2]**. This value is reported in the calibration report for the piston-cylinder module. The default is **0**.
- **Piston temperature coefficient:** Edit the value of the piston material linear thermal expansivity. The value must be entered in terms of relative change per degree centigrade **[nn x 10^{-6}/°C]**. The E-6 exponent is fixed. This value is reported in the calibration report for the piston-cylinder module. The default is **00**.
- **Cylinder temperature coefficient:** Edit the value of the cylinder material linear thermal expansivity. The value must be entered in terms of relative change per degree centigrade **[nn x 10^{-6}/°C]**. The 10^{-6} exponent is fixed. This value is reported in the calibration report for the piston-cylinder module. The default is **00**.
- **Effective area pressure coefficient:** Edit the value of the piston-cylinder change in effective area in terms of relative change per MegaPascal **[n.nn x 10^{-6}/MPa]**. The exponent is 10^{-6} for PG7601 and PG7102 and 10^{-6} for PG7302. This value is reported in the calibration report for the piston-cylinder module. The default is **0.00**.
- **Piston-cylinder surface tension effect:** Edit the value of the surface tension effect of the pressurized fluid on the piston. The value must be entered in Newton per meter **[N/m]**. This value is reported in the calibration report for the piston-cylinder module. The default is **0.00**. The correct value for all gas lubricated and liquid lubricated, gas operated piston-cylinders (PG7102, PG7601 and PG7202) is **0** unless they are operated with oil as the test medium.
- **Reference level offset:** Edit the value of the reference level offset which corrects the piston-cylinder reference level for hollow pistons (5 kPa/kg,
  10 kPa/kg, 20 kPa/kg and 50 kPa/kg gas lubricated piston-cylinder modules only) to the reference level marked on the mounting post (see Section 3.9.7). The value must be entered in millimeters **[mm]**. This value is reported in the calibration report for 5 kPa/kg, 10 kPa/kg, 20 kPa/kg and 50 kPa/kg gas lubricated piston-cylinders; it is **0** for all other piston-cylinders. The default is **0.00**.
- **Piston assembly mass:** Edit the value of the mass of the piston assembly (piston + piston head + piston cap). The value must be entered in kilogram **[kg]**. This value is reported in the calibration report for the piston-cylinder module. The default is **0.200000**.
- **Piston assembly average density:** Edit the value of the average density of the piston assembly (piston + piston head + cap). The value must be entered in kilogram per cubic meter **[kg/m^3]**. This value is reported in the calibration report for the piston-cylinder module. The default is **0**.

원문: Fluke Calibration PG7302 메뉴얼(영문) · 제조사 원문 자료입니다. 사양은 제조사 사정에 따라 변경될 수 있습니다.

- **Rotation rate ready limits [rpm]:** The minimum *Ready* rotation rate (see Section 3.4.2) and the target maximum rate. The values must be entered in rotations per minute **[rpm]**. The values (min and max) must be entered in rotations per minute **[rpm]**. The value automatically defaults to the factory recommended value for the piston-cylinder size and pressurized medium. In most circumstances, the factory default values should be used.
- **k(P) coefficient [kg/mm/min]:** Edit the value of the mass to equilibrium fall rate proportionality coefficient. This value is non-zero only for PG7102 or PC-7600 piston-cylinder modules that are used as the taring piston-cylinder in high line differential measurement mode (see Section 3.9.4.2). In all other cases, this value is zero. The value, when applicable, is specified in the piston-cylinder module technical data.
- **Calibration report number:** Edit the calibration report number to reflect the number of the piston-cylinder module calibration report that is currently valid. The number can be up to nine digits. The default is **1**.
- **Calibration report date:** Edit the date of the current calibration report. The date must be expressed in yyyymmdd format. The default is **19800101**.

After pressing **[ENTER]** to accept the edited calibration report date the option to save the edited piston-cylinder module information is presented. The display is:

```
Save PC S/N nnnn
1no 2yes
```

Select **<2yes>** to save the piston-cylinder module information under serial number nnnn and return to the **<1PC/MS>** menu.

Select **<1no>** to discard all edits and return to the **<1PC/MS>** menu.

3.11.1.2 Edit Piston-Cylinder Module

❍ **PURPOSE**

To edit information contained in an existing piston-cylinder module file. Use this function to change piston-cylinder module data after a recalibration.

❍ **PRINCIPLE/OPERATION**

⚠ Caution

Piston-cylinder module information is element specific metrological data. Uninformed or accidental altering of this information may lead to out of tolerance measurements. Piston-cylinder module information should only be edited by qualified personnel as part of the PG7000 calibration or recalibration process.

See Section 3.11.1.1 describing adding a new piston-cylinder module. The principles and procedures to add or edit a piston-cylinder module are identical except for the identification of the piston-cylinder module to be edited.

To edit information on an existing piston-cylinder module, press **[SPECIAL]** , **<1PC/MS>** and select **<1PC>**, **<2edit>**.

The display identifies the currently active piston-cylinder module. Press **[ENTER]** to edit the currently active piston-cylinder module or press **[P-C]** to toggle through the other piston-cylinder modules available. When the desired piston-cylinder module is identified, press **[ENTER]** to proceed with editing piston-cylinder module information. Operation of the editing function is identical to the add new piston-cylinder module procedure (see Section 3.11.1.1, OPERATION).

3.11.1.3 View Piston-Cylinder Module

© 2011 Fluke Calibration

원문: Fluke Calibration PG7302 메뉴얼(영문) · 제조사 원문 자료입니다. 사양은 제조사 사정에 따라 변경될 수 있습니다.

TS-TL-FLK-093

we measure, we calibrate, we validate. ㈜테솔 · www.tessol.com TS-TL-FLK-093 105 / 214

KOLAS 국제공인교정기관 · ISO/IEC 17025

❍ **PURPOSE**

To view the information contained in an existing piston-cylinder module file.

❍ **PRINCIPLE/OPERATION**

See Section 3.11.1.1, PRINCIPLE. The piston-cylinder module viewing function allows the piston-cylinder module information to be viewed but not altered.

To view information on an existing piston-cylinder module, press **[SPECIAL]** , **<1PC/MS>** and select **<1PC>**, **<3view>**.

The display identifies the currently active piston-cylinder module. Press **[ENTER]** to view the currently active piston-cylinder module or press **[P-C]** to toggle through the other piston-cylinder modules available (see Section 3.9.2). When the desired piston-cylinder module is identified, press **[ENTER]** to proceed with viewing piston-cylinder module information. Successive pressing of **[ENTER]** steps through the piston-cylinder information screens in the same order as the add and edit functions (see Section 3.11.1, View Piston-Cylinder Module, Principle).

3.11.1.4 Delete Piston-Cylinder Module

❍ **PURPOSE**

To delete a piston-cylinder module file so that it is no longer included in the piston-cylinder modules available for selection by pressing **[P-C]**.

❍ **OPERATION**

⚠ Caution

Once a piston-cylinder module file has been deleted it cannot be recovered. To recreate it, the add piston-cylinder module function must be used (see Section 3.11.1.1) which requires entering all the piston-cylinder module information. Before deleting a piston-cylinder module, consider editing it (see Section 3.11.1.2).

To delete a piston-cylinder module press **[SPECIAL]** , **<1PC/MS>** and select **<1PC>**, **<4delete>.**

The display identifies the currently active piston-cylinder module. Press **[ENTER]** to delete the currently active piston-cylinder module or press **[P-C]** to toggle through the other piston-cylinder modules available (see Section 3.9.2). When the desired piston-cylinder module is identified, press **[ENTER]** to proceed with deleting the piston-cylinder module information. Confirmation to delete is required. Select **<2yes>** to delete the piston-cylinder module. Select **<1no>** to NOT delete.

Note

The active piston-cylinder module (piston-cylinder module that is currently selected) cannot be deleted. Before attempting to delete a piston-cylinder module, be sure it is not currently selected.

3.11.1.5 Select the active piston-cylinder module

❍ **PURPOSE**

To select the piston-cylinder module that is active and used by PG7000 in its mass loading and defined pressure calculations.

Note

This function serves the same purpose as pressing [P-C] (see Section 3.9.2).

원문: Fluke Calibration PG7302 메뉴얼(영문) · 제조사 원문 자료입니다. 사양은 제조사 사정에 따라 변경될 수 있습니다.

TS-TL-FLK-093

we measure, we calibrate, we validate. ㈜테솔 · www.tessol.com TS-TL-FLK-093 106 / 214

KOLAS 국제공인교정기관 · ISO/IEC 17025

❍ **OPERATION**

To select the active piston-cylinder module press **[SPECIAL]** , **<1PC/MS>** and select **<1PC>**, **<5select>**.

3.11.1.6 Add Mass Set

❍ **PURPOSE**

To create a new mass set that will be available for selection as the active mass set to load on the PG7000 piston. Use this function when a new mass set has been acquired or a mass set was deleted and must be reentered.

Note

If the mass set and PG7000 Platform were delivered together, the mass set has already been entered at the factory. Before creating a new mass set, check whether it already exists using the view mass set function (see Section 3.11.1.8).

❍ **PRINCIPLE**

The PG7000 add and edit mass set functions allow mass set composition and metrological variable values to be defined and stored. These values will be used by PG7000 when the mass set is made active to calculate nominal mass instructions and true mass loads. Up to three mass sets can be created.

Setting up or editing a mass set requires defining the density of the masses, the mass set composition and the true mass of each individual mass. This information can be found in the calibration report for the mass set.

Mass sets are created and edited in terms of mass groups reflecting the normal composition of a PG7000 mass set. Standard PG7000 mass sets are made up of these groups (see Section 2.1.2.2 for listings of standard PG7000 mass set compositions).

The mass groups of a **MANUAL** mass set include:

1. ***Make up* mass (9, 4.5 or 4 kg)**: A single mass, sequentially numbered **1**. The value of this mass is 9 kg if the mass set main masses are 10 kg and 4 kg or 4.5 kg if the mass set main masses are 5 kg. The purpose of this mass is to arrive at a whole number nominal mass load equal to the sets main masses (10 kg or 5 kg) when added to the piston and mass loading bell.
2. **10 kg masses**: The main masses in a standard 80 or 100 kg mass set. Sequentially numbered from **1** up to the total number of 10 kg masses. Mass sets of < 80 kg do not normally include 10 kg masses.
3. **5 kg masses**: The main masses in any standard mass set of less than 80 kg. Sequentially numbered from **1** up to the total number of 5 kg masses. Standard 80 and 100 kg mass sets have one 5 kg mass.
4. **2 kg masses**: Every standard mass set has two 2 kg masses numbered **1** and **2**.
5. **1 kg masses**: Every standard mass set has one 1 kg mass numbered **1**.
6. **0.5 kg masses**: Every standard mass set has one 0.5 kg mass number **1**.
7. **0.2 kg masses**: Every standard mass set has two 0.2 kg masses numbered **1** and **2**.
8. **0.1 kg masses**: Every standard mass set has one 0.1 kg mass numbered **1**.
9. **Trim masses**: Every standard mass set has a trim mass set made up of masses from 50 to 0.01 g. These masses are NOT defined and entered as part of the mass set.

The mass groups of an **AMH** automated mass handler mass set include:

© 2011 Fluke Calibration

원문: Fluke Calibration PG7302 메뉴얼(영문) · 제조사 원문 자료입니다. 사양은 제조사 사정에 따라 변경될 수 있습니다.

TS-TL-FLK-093

we measure, we calibrate, we validate.
㈜테솔 · www.tessol.com TS-TL-FLK-093 107 / 214
KOLAS 국제공인교정기관 · ISO/IEC 17025

1. **Main masses (10 kg with AMH-100, 6.2 kg with AMH-38)**: Sequentially numbered from **1** to a maximum of **9** for AMH-100 or **1** to a maximum of **5** for AMH-38.
2. **6.4 kg mass (AMH-100 only)**: Single tubular, binary mass.
3. **3.2 kg mass**: Single tubular, binary mass.
4. **1.6 kg mass**: Single tubular, binary mass.
5. **0.8 kg mass**: Single tubular, binary mass.
6. **0.4 kg mass**: Single tubular, binary mass.
7. **0.2 kg mass**: Single tubular, binary mass.
8. **0.1 kg mass**: Single tubular, binary mass.
9. **Trim masses**: Every standard mass set has a trim mass set made up of masses from 50 to 0.01 g. These masses are NOT defined and entered as part of the mass set.

⚠ Caution

When PG7000 provides mass loading instructions and calculates the true mass of the mass currently loaded, it assumes that the mass set in use has been set up correctly and that masses have been loaded following PG7000 mass loading protocol (see Section 3.6). For PG7000 mass loading protocol to operate properly, the mass set in use must be EXACTLY the mass set that has been defined by the add and/or edit mass function. No extra mass can be included, no mass used can be missing and the sequential numbers of masses in each mass group must be followed with the correct true mass value entered for each individual mass. Using a mass set that is not accurately set up may result in out of tolerance pressure definitions.

Note

Though the piston and the mass loading bell constitute part of the mass load, they are not included in the definition of a mass set. Also, one PG7000 system may be used with several piston-cylinder modules, mass loading bells and mass sets. Therefore, the piston mass and mass loading bell mass information are not part of the mass set. Piston mass information is defined and stored in the piston-cylinder module file (see Section 3.11.1.1) and mass loading bell information is defined and stored in a separate mass loading bell files (see Section 3.11.1.11). In an AMH mass set, the binary mass carrier and mass lifting shaft are considered part of the bell.

- **OPERATION**

⚠ Caution

Mass set information is element specific metrological data. Uninformed or accidental altering of this information may lead to out of tolerance measurements. Mass set information should only be edited by qualified personnel as part of the PG7000 calibration or recalibration process.

원문: Fluke Calibration PG7302 메뉴얼(영문) · 제조사 원문 자료입니다. 사양은 제조사 사정에 따라 변경될 수 있습니다.

Note

- **To use the create or edit mass set function with a manual mass set, it is important to have an understanding of mass set structure and mass groups. Consult Section 3.6, PRINCIPLE, to familiarize yourself with this information before attempting to create or edit a mass set. Before creating or editing an AMH automated mass handler mass set, see the AMH-38/AMH-100 Operation and Maintenance Manual.**
- **PG7000 can store up to 3 MS (mass set) files. When <3add> is selected and all the files have already been used, a warning is displayed. A mass set must be deleted before a mass set can be added.**

To create a new PG7000 mass set there are three sequential steps:

❶ Initialize mass set: Define serial number, density, mass set type (manual or AMH), calibration report number and date.

❷ Define individual masses: Edit, add and delete mass groups as necessary to identify and define all masses in the mass set.

❸ Save mass set file or abandon changes.

Step ❶: Initialize Mass Set

Press **[SPECIAL]** , **<1PC/MS>** and select **<2mass set>**, **<3add>**.

Edit the serial number to the number of the mass set being added and press **[ENTER].** The display is:

```
Add mass set:
S/N 1
```

Edit the density of the masses being added (all PG7000 mass sets have density of 8 000 kg/m3) and press **[ENTER]**. The display is:

```
Mass density:
8000 kg/m3
```

Select **<1manual>** for a manual mass set or **<2AMH>** for an automated mass handler mass set.

```
Mass set type:
1manual 2AMH
```

Edit the calibration report number (up to nine digits) to the the number of the current calibration report of the mass set that is being added and press **[ENTER]**. The display is:

```
Cal report number?
1
```

Edit the calibration report date to the date of the current calibration report of the mass set that is being added (format must be YYYYMMDD) and press **[ENTER]**. [ENTER] leads to the second step of mass set adding or editing.

```
Cal report date?
19800101
```

Pressing **[ESCAPE]** at any point goes to an abandon edits warning screen. To continue with defining the mass set proceed to Step ❷.

Step ❷: Define Individual Masses

This step can only be reached by going through Step ❶.

© 2011 Fluke Calibration

원문: Fluke Calibration PG7302 메뉴얼(영문) · 제조사 원문 자료입니다. 사양은 제조사 사정에 따라 변경될 수 있습니다.

we measure, we calibrate, we validate.
㈜테솔 · www.tessol.com TS-TL-FLK-093 109 / 214
KOLAS 국제공인교정기관 · ISO/IEC 17025

TS-TL-FLK-093

If the mass set is a MANUAL mass set, the display is:

```
Select mass grp (kg)
MKUP 5.00 2.00 1.001↓
0.50 0.20 0.10 ADD
```

If the mass set is an AMH automated mass handler mass set, the display is: (6.4 is only present for AMH-100)

```
Select mass grp (kg)
MAIN 6.40 3.20 1.60↓
0.80 0.40 0.20 0.10
```

Note

Some screens, such as the SPECIAL menu, go beyond the two lines provided by the display. This is indicated by a flashing arrow in the second line of the display. Press the [←] and [→] keys to move the cursor to access the lines that are NOT visible or directly enter the number of the hidden menu choice if you know it.

Refer to Sections 3.11.1.6, PRINCIPLE and 3.6 for information on mass group definitions. To create the mass set, each and every mass in the mass set, no more and no less, (but not the piston and the bell) must be identified and its true mass entered. To select a mass group press the **[←]** and **[→]** keys to position the cursor on the mass group to be edited. If the mass is needed but not shown, select **<ADD>** to create a new mass group. To delete a mass group, enter **<0>** as the number of masses in the group.

⚠ Caution

All standard PG7000 MANUAL mass sets have a makeup mass (MKUP). This mass may be 4, 4.5 or 9 kg depending on the mass set (see Section 3.6, PRINCIPLE). It is imperative that the make up mass be defined and entered in the MKUP group.

Operation within each mass group is identical, for example, select **<5.00>**. The display is:

1. Edit field for number of masses in the mass group.

```
# of masses in group
(0 deletes grp):   1
```

1

Edit the number of masses in group to reflect the number of masses of that nominal value there are in the group and press **[ENTER]**. The display is:

1. Sequential ID number of this specific mass within the mass group.
2. Edit field for the true value of this specific mass.

1

```
5.0 kg mass #1
True mass:  5.00000
```

2

Edit the mass value to the true value of the specific mass identified and press **[ENTER]**.

Note

For high line differential mode, when setting up the tare mass set of the tare PG7000, the true mass of each mass is entered as equal to the nominal value. Enter the nominal mass values for the true mass values.

원문: Fluke Calibration PG7302 메뉴얼(영문) · 제조사 원문 자료입니다. 사양은 제조사 사정에 따라 변경될 수 있습니다.

If there are additional masses in this mass group, the next display is the same as the display immediately above but with the next mass specific mass sequential ID number in the mass group. The screens continue until the true value of all of the masses within the group has been entered. After the last entry, the screen returns to the **<Select mass grp>** screen.

Edit, add and delete mass groups as necessary until all of the masses in the mass set (do not include pistons, bells and trim masses of 50 grams and less) have been entered, no more, no less. When Step ❷ is completed, press **[ESCAPE]** to go to Step ❸.

Note

Setting up an 80 kg or 100 kg manual mass set requires using <ADD> to add a 10 kg mass group as the 10 kg mass group is not included by default.

Step ❸: Save Mass Set File

Pressing **[ESCAPE]** in the mass set editing screen goes to the save screen.

The display is:

```
Save MS S/N 4573
1no 2yes
```

Select **<2yes>** to save the all changes made to the mass set and exit. Select **<1no>** to abandon all changes made to the mass set and exit.

3.11.1.7 Edit mass set

❍ **PURPOSE**

To edit information contained in an existing mass set file. Use this function to change mass set data after a recalibration or if a mass set configuration changes.

❍ **PRINCIPLE/OPERATION**

⚠ Caution

Mass set information is element specific metrological data. Uninformed or accidental altering of this information may lead to out of tolerance measurements. Mass set information should only be edited by qualified personnel as part of the PG7000 calibration or recalibration process.

See Section 3.11.1.6 describing adding a new mass set. The principles and procedures to add or edit a mass set are identical except that the mass set to edit is selected from the existing mass sets screen.

The mass set type (manual or AMH) cannot be changed when a mass set is edited.

3.11.1.8 View Mass Set

❍ **PURPOSE**

To view information contained in an existing mass set file.

❍ **OPERATION**

To view information contained in an existing mass set file press **[SPECIAL]** , **<1PC/MS>** and select **<2mass set>**, **<1view>**. The viewing function operates in the same manner as the add function (see Section 3.11.1.6).

3.11.1.9 Delete Mass Set

❍ **PURPOSE**

To delete an existing mass set file entirely.

© 2011 Fluke Calibration

원문: Fluke Calibration PG7302 메뉴얼(영문) · 제조사 원문 자료입니다. 사양은 제조사 사정에 따라 변경될 수 있습니다.

we measure, we calibrate, we validate.
㈜테솔 · www.tessol.com TS-TL-FLK-093 111 / 214
KOLAS 국제공인교정기관 · ISO/IEC 17025

TS-TL-FLK-093

❍ **OPERATION**

⚠ Caution

Once a mass set file has been deleted it cannot be recovered. To recreate it, the add mass set function must be used (see Section 3.11.1.6) which requires entering all the mass set information. Before deleting a mass set, consider editing it (see Section 3.11.1.7).

To delete a mass set press **[SPECIAL]** , **<1PC/MS>** and select **<2mass set>**, **<4delete>.** Select the mass set to be deleted and press **[ENTER]**. Select **<2yes>** to delete the mass set. Press **<1no>** to NOT delete.

Note

The active mass set (mass set that is currently selected) cannot be deleted. Before attempting to delete a mass bell, be sure it is not currently selected.

3.11.1.10 Select Mass Set

❍ **PURPOSE**

To select a mass set to be active and used by PG7000 in its mass loading and defined pressure calculations. To initialize the optional AMH automated mass handler if present.

❍ **OPERATION**

To select the active mass set press **[SPECIAL]** , **<1PC/MS>** and select **<2mass set>**, **<5select>**.

Mass sets for an AHM automated mass handler are identified by a letter **<A>** after their serial number.

Put the cursor on the desired mass set and press **[ENTER]**.

If a MANUAL mass set is selected, operation returns to the MAIN run screen.

If an AMH automated mass handler mass set is selected, the PG7000 platform attempts to establish communication with the AMH and initialize it. If the communication cannot be established with the AMH, an error is displayed. If communication with the AMH mass set is established, the AMH is initialized and all masses are loaded. If the AMH is unable to complete initialization, an error message is displayed. The most common reason for failure to complete initialization is inadequate drive pressure supply to the AMH. For trouble shooting, see the AMH-38/AMH-100 Operation and Maintenance Manual. If the AMH initialization completes successfully, operation returns to the main run screen with the AMH active. The AMH remains active until a non-AMH mass set is selected. The PG7000 platform will attempt to initialize the AMH on power up if an AMH mass set is the active mass set.

3.11.1.11 Add Mass Loading Bell

❍ **PURPOSE**

To create a new mass loading bell that will be available for selection as the active mass loading bell. Use this function when a new mass loading bell has been acquired.

Note

If the mass loading bell and PG7000 Platform were delivered together, the mass loading bell has already been entered at the factory. Before creating a new mass loading bell, check whether it already exists (see Section 3.11.1.13).

원문: Fluke Calibration PG7302 메뉴얼(영문) · 제조사 원문 자료입니다. 사양은 제조사 사정에 따라 변경될 수 있습니다.

- **PRINCIPLE**

See Section 3.11.1.6, PRINCIPLE.

- **OPERATION**

⚠ Caution

Mass loading bell information is element specific metrological data. Uninformed or accidental altering of this information may lead to out of tolerance measurements. Mass loading bell information should only be edited by qualified personnel as part of the PG7000 calibration or recalibration process.

Note

PG7000 can store up to 3 mass bell files. When <3add> is selected and all the files have already been used, a warning is displayed. A mass loading bell must be deleted before a mass loading bell can be added.

To create a new PG7000 mass loading bell press **[SPECIAL]** and select **<1PC/MS>**, **<3mass bell>**, **<3add>**.

Edit the serial number to the number of the mass bell being added and press **[ENTER]**. The display is:

```
Add mass bell:
S/N 1
```

Edit the average mass density of the mass loading bell and press **[ENTER]**. The value defaults to the default density for the typical mass loading bell for the PG7000 model. The display is:

```
Mass density?
5058 kg/m3
```

Note

The AMH automated mass handler mass bell includes the bell, the binary mass carrier and the mass lifting shaft.

Edit the calibration report number (up to nine digits) to the the number of the current calibration report of the mass loading bell that is being added and press **[ENTER]**. The display is:

```
Cal report number?
1775
```

Edit the calibration report date to the date of the current calibration report of the mass loading bell that is being added and press **[ENTER]**. The display is:

```
Cal report date?
20040101
```


© 2011 Fluke Calibration

원문: Fluke Calibration PG7302 메뉴얼(영문) · 제조사 원문 자료입니다. 사양은 제조사 사정에 따라 변경될 수 있습니다.

we measure, we calibrate, we validate.
㈜테솔 · www.tessol.com TS-TL-FLK-093 113 / 214
KOLAS 국제공인교정기관 · ISO/IEC 17025

TS-TL-FLK-093

Edit the the true mass value of the mass loading bell that is being added and press **[ENTER]**. The value defaults to the nominal mass of the typical mass loading bell for the PG7000 model. The display is:

```
Bell #2832
True mass: 0.449985
```

Note

For high line differential mode, when setting up the tare bell of the tare PG7000, the true mass of is entered as equal to the nominal mass. Enter the nominal mass of the bell as the true mass.

Select **<2yes>** to save the all changes made to the mass loading bell and exit.

Select **<2no>** to abandon all changes made to the mass loading bell and exit.

```
Save bell S/N 2832?
1no 2yes
```

3.11.1.12 Edit Mass Loading Bell

- **PURPOSE**

To edit information contained in an existing mass loading bell file. Use this function to change mass loading bell data after a recalibration.

- **PRINCIPLE/OPERATION**

⚠ Caution

Mass loading bell information is element specific metrological data. Uninformed or accidental altering of this information may lead to out of tolerance measurements. Mass loading bell information should only be edited by qualified personnel as part of the PG7000 calibration or recalibration process.

See Section 3.11.1.11 describing adding a new mass loading bell. The principles and procedures to add or edit a mass loading bell are identical except that the mass loading bell to edit is selected from the existing mass loading bell screen.

3.11.1.13 View mass loading bell

- **PURPOSE**

To view information contained in an existing mass loading bell file.

- **OPERATION**

To view information contained in an existing mass loading bell file press **[SPECIAL]** and select **<1PC/MS>**, **<3mass bell>**, **<1view>**. The viewing function is identical to the add function (see Section 3.11.1.11).

3.11.1.14 delete mass loading bell

- **PURPOSE**

To delete an existing mass loading bell file entirely.

- **OPERATION**

⚠ Caution

Once a mass loading bell file has been deleted it cannot be recovered. To recreate it, the add mass loading bell function must be used (see Section 3.11.1.11) which requires entering all the mass loading bell information. Before deleting a mass loading bell, consider editing it (see Section 3.11.1.12).

원문: Fluke Calibration PG7302 메뉴얼(영문) · 제조사 원문 자료입니다. 사양은 제조사 사정에 따라 변경될 수 있습니다.

we measure, we calibrate, we validate.
㈜테솔 · www.tessol.com TS-TL-FLK-093 114 / 214
KOLAS 국제공인교정기관 · ISO/IEC 17025

TESSOL Technical Library
TS-TL-FLK-093

To delete a mass loading bell press **[SPECIAL]**, **<1PC/MS>** and select **<3mass bell>**, **<4delete>.**

Confirmation to delete is requested. Select **<2yes>** to delete the mass loading bell. Press **<1no>** to NOT delete.

Note

The active mass bell (mass bell that is currently selected) cannot be deleted. Before attempting to delete a mass bell, be sure it is not currently selected.

3.11.1.15 Select Mass Loading Bell

- **PURPOSE**

To select the mass loading bell that is active and used by PG7000 in its mass loading and defined pressure calculations.

- **OPERATION**

To select the active mass loading bell set press **[SPECIAL]**, **<1PC/MS>** and select **<3mass bell>**, **<5select>**.

3.11.2 <2presu>

- **PURPOSE**

To customize the selection of pressure units that are available for selection from the UNIT function key (see Section 3.9.3).

- **PRINCIPLE/OPERATION**

See Section 3.9.3.1.

3.11.3 <3HEAD>

- **PURPOSE**

To change DUT head configuration; to change the ATM head height; turn to turn the PISTON head ON and OFF (PG7302 only).

- **PRINCIPLE**

PG7000 supports three different fluid head correction functions.

1. There is a correction to consider the difference in height between the PG7000 reference level and a device under test (see Section 3.9.7, PRINCIPLE). This head correction is referred to as DUT head. The head height can be adjusted by pressing **[HEAD]**. The head unit of measure and fluid are adjusted by pressing **[SPECIAL]** and selecting **<3head>**, **<1fluid>** and **<2unit>**.
2. The second head function is the head correction for the PG7000 reading of atmospheric pressure that is used to calculate air density and/or to add to atmospheric pressure in absolute by adding atmosphere mode. The barometer reading atmospheric pressure may not be at the same height as the piston reference level and, if so, a head correction is needed to determine atmospheric pressure at the piston reference level. This head correction is referred to as ATM head. The ATM head height can be edited by pressing **[SPECIAL]** and selecting **<3head>**, **<3atm>**. The ATM head is only applied to internal or external barometer readings. It is not applied to normal or user values of atmospheric pressure.
3. The third head function is the automated correction for the piston position, referred to as PISTON head. The PG7000 reference level marked on the piston-cylinder module mounting post is the level at which pressures are defined when the piston is in midstroke position. But it may not always be practical to make measurement with the PG7000 piston exactly in its midstroke position. In fact, the piston position is *Ready* within a limit band above and below midstroke (see Section 3.4.1). As the piston moves away from midstroke, the pressure definition reference level moves proportionally. PG7000's automated correction for piston position calculates the head pressure corresponding to the deviation in piston position from midstroke and compensates the defined pressure back to midstroke. In this way, the defined pressure calculated by PG7000 is always the

© 2011 Fluke Calibration

원문: Fluke Calibration PG7302 메뉴얼(영문) · 제조사 원문 자료입니다. 사양은 제조사 사정에 따라 변경될 수 있습니다.

TESSOL Technical Library
TS-TL-FLK-093
we measure, we calibrate, we validate.
㈜테솔 · www.tessol.com TS-TL-FLK-093 115 / 214
KOLAS 국제공인교정기관 · ISO/IEC 17025

pressure at the reference level marked on the mounting post, even if the piston is not at midstroke position. The PISTON head function can be turned ON and OFF by pressing **[SPECIAL]** and selecting **<3head>**, **<4piston>**.

Note

See Section 7.2.3 for information on calculation of the three fluid head correction functions.

❍ **OPERATION**

To access various fluid HEAD correction functions press **[SPECIAL]**, and select **<3head>**. The display is:

```
Edit head: 1fluid
2unit 3atm 4piston
```

- Select **<1fluid>** to change the DUT head fluid (see Section 3.11.3.1).
- Select **<2unit>** to specify the DUT head height unit of measure (see Section 3.11.3.2).
- Select **<3atm>** to adjust the ATM head height (see Section 3.11.3.3).
- Select **<4piston>** to turn the PISTON head correction ON and OFF (see Section 3.11.3.4).

3.11.3.1 <3head>, <1fluid>

❍ **OPERATION**

- To specify the DUT head fluid (see Section 3.11.3, PRINCIPLE), press **[SPECIAL]** and select **<3head>**, **<1fluid>**. The display is:

```
Head fluid:
1gas 2liquid
```

- If **<1gas>** is selected, the display offers the choice of three gasses. Making a gas selection returns to the previous run screen with that gas active for the DUT head function. The display is:

```
Gas type:
1N2 2He 3Air
```

- If **<2liquid>** is selected, the display offers the choice of oil, water or a user defined liquid. If the user defined liquid is selected, its density must be specified. Making a liquid selection returns to the previous run screen with that liquid active for the DUT head function. The display is:

```
Liquid type:
1oil 2H20 3user
```

Note

In systems using fluid interfaces, the head fluid selected should be the medium used in the height separating the P7000 reference level from the device under test.

3.11.3.2 <3head>, <2unit>

❍ **OPERATION**

To specify the DUT and ATM head height unit (see Section 3.11.3, PRINCIPLE), press **[SPECIAL]** and select **<3head>**, **<2unit>**. The display is:

```
Head height unit:
1in 2cm
```

Selecting the desired unit returns to the previous run screen with that unit active for the DUT and ATM head function heights.

원문: Fluke Calibration PG7302 메뉴얼(영문) · 제조사 원문 자료입니다. 사양은 제조사 사정에 따라 변경될 수 있습니다.

we measure, we calibrate, we validate. ㈜테솔 · www.tessol.com TS-TL-FLK-093 116 / 214
KOLAS 국제공인교정기관 · ISO/IEC 17025

TESSOL Technical Library TS-TL-FLK-093

3.11.3.3 <3head>, <3atm>

❍ **OPERATION**

To specify the ATM head height (see Section 3.11.3, PRINCIPLE), press **[SPECIAL]** and select **<3head>**, **<3atm>**. The display is:

```
Edit ATM head unit:
-10.00 cm
```

Entering the ATM head returns to the previous run screen with the new height active.

The correct head height when using the PG7000 internal barometer is the source for atmospheric pressure measurements (see Section 3.10) is -10.00 cm (-3.94 in.).

Note

The ATM head height is negative if the barometer is below the PG7000 reference level and positive if the barometer is above the reference level. The ATM head fluid is air and it cannot be changed. The ATM head height unit is set by pressing [SPECIAL] and selecting <3head>, <2unit>. The default ATM head height is -10 cm, which is the difference in height between the PG7000 reference level and its internal barometer mounted on the PG7000 Platform rear panel.

3.11.3.4 <3head>, <4piston>

❍ **OPERATION**

To turn the PISTON head correction function ON and OFF (see Section 3.11.3, PRINCIPLE), press **[SPECIAL]** and select **<3head>**, **<4piston>**.

Select **<1on>** to turn the PISTON head correction function ON so that a head correction for piston position IS automatically applied.

Select **<2off>** to turn the PISTON head correction function OFF so that a head correction for piston position IS NOT applied.

Note

- **The PISTON head is automatically turned OFF (has no effect) in gauge or differential measurement mode when the set pressure is zero (system vented or bypassed). When the system is vented or bypassed, the piston position no longer affects the head. If the pressurized medium is a liquid, the head reference level is the top of the fluid in the tank to which the PG7000 system is connected.**
- **In PG7202, the test medium to use for the head correction is determined by the piston-cylinder module pressure deformation coefficient and the surface tension correction value. If the pressure deformation coefficient value is positive, the piston-cylinder module in use is assumed to be a PC-7300 module and the test medium is oil. If the pressure deformation coefficient is negative and the surface tension correction is zero, the piston-cylinder module in use is assumed to be a PC-7200 and the test medium is gas. PC-7300 modules have free deformation mounting systems and thus positive pressure deformation coefficients while PC-7200 modules have negative free deformation mounting systems and thus negative deformation coefficients.**

© 2011 Fluke Calibration

원문: Fluke Calibration PG7302 메뉴얼(영문) · 제조사 원문 자료입니다. 사양은 제조사 사정에 따라 변경될 수 있습니다.

TS-TL-FLK-093

we measure, we calibrate, we validate.
㈜테솔 · www.tessol.com TS-TL-FLK-093 117 / 214
KOLAS 국제공인교정기관 · ISO/IEC 17025

3.11.4 <4Prefs>

❍ **PURPOSE**

To access a menu of PG7000 internal operational preferences and functions including screen saver, sounds, time and date, instrument ID and user protection levels.

❍ **OPERATION**

To access the PREFS menu press **[SPECIAL]**, and select **<4prefs>**. The display is:

```
1ScrSvr 2sound 3time
4ID 5level
```

Prefs menu choices include:

<1ScrSvr>: View and change the screen saver function (see Section 3.11.4.1).

<2sounds>: View and change keypad press and piston position sound settings (see Section 3.11.4.2).

<3time>: View and edit the internal time and date settings (see Section 3.11.4.3).

<4ID>: View and edit the PG7000 user ID (see Section 3.11.4.4).

<5level>: View and edit user protection levels and password (see Section 3.11.4.5).

3.11.4.1 <4PREFS>, <1ScrSVR>

❍ **PURPOSE**

To adjust the time of inactivity after which PG7000's SCREEN SAVER function activates or to turn off the screen saver function.

❍ **PRINCIPLE**

PG7000 has a SCREEN SAVER function which causes the display to dim after a front panel key is NOT pressed for a certain amount of time. The default time activates the screen saver after 10 minutes. The time can be adjusted by the user or screen saving can be disabled.

❍ **OPERATION**

To access the SCREEN SAVER function, press **[SPECIAL]** and select **<4prefs>**, **<1ScrSav>**. Edit the time, in minutes, after which the screen saver will activate to dim the screen. Set zero to disable the SCREEN SAVER function.

Note

Setting the screen saver time to zero disables the screen saver function so that the display remains permanently at full brightness.

3.11.4.2 <4PREFS>, <2Sound>

❍ **PURPOSE**

To adjust the key press sounds and turn piston position sounds ON and OFF.

❍ **PRINCIPLE**

PG7000 provides audible feedback of valid and invalid key presses and of when the piston leaves the high or low stop position (see Section 3.5). Key press sounds can be adjusted in frequency or turned OFF completely. Piston position sounds may be turned ON and OFF.

❍ **OPERATION**

To access the audible feedback adjustment function, press **[SPECIAL]** and select **<4prefs>**, **<2sound>**.

Select **<1keypad>** to adjust keypad sounds. Select **<2piston>** to turn the position sounds ON or OFF.

원문: Fluke Calibration PG7302 메뉴얼(영문) · 제조사 원문 자료입니다. 사양은 제조사 사정에 따라 변경될 수 있습니다.

3.11.4.3 <4PREFS>, <3Time>

❍ **PURPOSE**

To view and edit the PG7000 internal time and date settings.

❍ **OPERATION**

To access the time function press **[SPECIAL]** and select **<4prefs>**, **<3time>**. The display is:

```
Edit: 1time 2date
08:32:11 am 19980101
```

Select **<1time>** to edit the time. Edit hours, then minutes, then am/pm by pressing **[ENTER]** at each entry. Seconds go to zero when minutes are entered.

Select **<2date>** to edit the date. The date must be specified in YYYYMMDD format.

Note

The PG7000 date and time are set to United States Mountain Standard Time in the final test and inspection process at the factory. If desired, use the date function to set your local time and date.

3.11.4.4 <4PREFS>, <4ID>

❍ **PURPOSE**

To view or edit the PG7000 user ID and to view the PG7000 serial number.

❍ **PRINCIPLE**

PG7000 has a factory programmed serial number that is included on the rear of the platform and can be viewed in the introductory screen.

PG7000 also allows the user to store one unique, twelve character, alpha numeric ID number. This feature is frequently used to assign an organizational control ID such as an asset number, tool number, standard number, etc. The ID function allows the ID number to be viewed and edited. It also displays the PG7000 factory serial number.

❍ **OPERATION**

To access the ID function press **[SPECIAL]** and select **<4prefs>**, **<4ID>**. Select **<1view>** to view the current ID.

Select **<2edit>** to edit the ID.

The ID has twelve characters. When the edit screen is opened, the cursor is on the first character. Numerical values can be entered directly from the keypad. In addition, the **[←]** and **[→]** keys can be used to toggle through a list of available alpha numeric characters. Holding the key steps through the characters. Character order going up (**[→]**) is: *blank space, symbols, lower case letters, upper case letters, numbers*. Press **[ENTER]** to select a character and move to the next character.

When a character is selected the cursor moves to the next character. To leave a blank character, press **[ENTER]** with the field for that character blank. Press **[ESCAPE]** when all ID characters have been entered to access the **<Save ID?>** option. Select **<1no>** to abandon edits and exit or select **<2yes>** to save the edited ID.

Note

The ID can be viewed and edited but it cannot be cleared or reset by any reset functions (see Section 3.11.9).

© 2011 Fluke Calibration

원문: Fluke Calibration PG7302 메뉴얼(영문) · 제조사 원문 자료입니다. 사양은 제조사 사정에 따라 변경될 수 있습니다.

we measure, we calibrate, we validate.
㈜테솔 · www.tessol.com TS-TL-FLK-093 119 / 214
KOLAS 국제공인교정기관 · ISO/IEC 17025

TS-TL-FLK-093

3.11.4.5 <4prefs>, <5level>

❍ PURPOSE

To set user protection levels that restrict access to certain functions and to edit the password required for changing User Levels.

❍ PRINCIPLE

PG7000's front panel user interface provides the means to access all PG7000 user defined data, settings and functions including calibration data. Inadvertent, uninformed or unauthorized altering or deleting of data, settings and functions could require extensive reconfiguration by the user and might cause invalid readings. For these reasons, depending upon the application in which PG7000 is being used, it may be desirable to restrict access to certain functions. The USER LEVEL function provides a means of restricting access to certain functions. Four different levels of security are available: none, low, medium and high.

Access to changing security levels can be left open, or be protected by a password so that security levels can be used as a convenient way to avoid accidental changing of data or as a secured means of preventing tampering with PG7000 settings.

The security levels are structured to support typical operating environments as follows:

None	This level is intended for use only by the system manager and/or calibration facility. It allows access and editing in all areas including critical metrological information and other settings that affect measurement integrity.
Low	Low security is designed to protect the specific metrological information and system diagnostic and maintenance functions of the system against accidental alteration. It is intended for an advanced operator performing many different tasks. Low security is the default User Level setting.
Medium	Medium security is designed to protect specific metrological information in the system and to ensure that PG7000 is operated using consistent operational parameters.
High	High security protects all operating parameters. It is intended to minimize operator choices (e.g., to perform repeated identical tests under consistent conditions).

⚠ Caution

- **PG7000 is delivered with the security level set to low to avoid inadvertent altering of critical internal settings but with unrestricted access to changing security level setting. It is recommended that the low security level be maintained at all times and password protection be implemented if control over setting of security levels is desired.**
- **If there is a risk of unauthorized changing of the security level, changing authority should be password protected (see OPERATION of this section).**
- **The High security level disables remote communications and returns an error message ("ERROR") to all remote commands. All other security levels have NO effect on remote communications.**

원문: Fluke Calibration PG7302 메뉴얼(영문) · 제조사 원문 자료입니다. 사양은 제조사 사정에 따라 변경될 수 있습니다.

TESSOL Technical Library

TS-TL-FLK-093

we measure, we calibrate, we validate.

㈜테솔 · www.tessol.com TS-TL-FLK-093 120 / 214

KOLAS 국제공인교정기관 · ISO/IEC 17025

The security levels are structured to support typical levels of operation. Specifically, the security levels **prevent** execution of the functions marked by "•":

Table 20. Security Levels - Functions NOT Executed Per Function/Level

FUNCTION	LOW	MEDIUM	HIGH
[P-C]			•
[UNIT]			•
[MODE]			•
[SYSTEM]			•
[AMBIENT]			•
[HEAD]		•	•
[ROTATE]			•
[GEN]			•
[RES] (change setting)		•	•
[P OR M]		•	•
[SETUP], <1select>		•	•
[SETUP], <2view>			•
[SETUP], <3edit>		•	•
[SPECIAL], <1PC/MS>, <any selection>, <1view>			•
[SPECIAL], <1PC/MS>, <any selection>, <2edit>	•	•	•
[SPECIAL], <1PC/MS>, <any selection>, <3add>	•	•	•
[SPECIAL], <1PC/MS>, <any selection>, <4delete>	•	•	•
[SPECIAL], <1PC/MS>, <1PC>, <5select>			•
[SPECIAL], <1PC/MS>, <2mass set>, <5select>		•	•
[SPECIAL], <1PC/MS>, <2mass bell>, <5select>		•	•
[SPECIAL], <2presU>		•	•
[SPECIAL], <3head>		•	•
[SPECIAL], <4prefs>		•	•
[SPECIAL], <4prefs>, <3time> (make changes)	•	•	•
[SPECIAL], <4prefs>, <4ID>, <2edit>	•	•	•
[SPECIAL], <6remote> (access)			•
[SPECIAL], <6remote> (make changes)		•	•
[SPECIAL], <5prefs>, <3time> (make changes)	•	•	•
[SPECIAL], <6gl> (access)	•	•	•
[SPECIAL], <7cal>, (access)			•
[SPECIAL], <7cal>, <any selection except 5Pposition>, <2cal>	•	•	•
[SPEICAL], <8AMH>, <any selection>		•	•
[SPECIAL], <9reset>		•	•
[SPECIAL], <9reset>, <1sets>	•	•	•
[SPECIAL], <9reset>, <3com>	•	•	•
[SPECIAL], <9reset>, <4cal>	•	•	•
[SPECIAL], <9reset>, <5setups>	•	•	•
[SPECIAL], <9reset>, <6all>	•	•	•
Remote communications disabled			•

© 2011 Fluke Calibration

원문: Fluke Calibration PG7302 메뉴얼(영문) · 제조사 원문 자료입니다. 사양은 제조사 사정에 따라 변경될 수 있습니다.

we measure, we calibrate, we validate.
㈜테솔 · www.tessol.com TS-TL-FLK-093 121 / 214
KOLAS 국제공인교정기관 · ISO/IEC 17025

TS-TL-FLK-093

❍ OPERATION

Note

PG7000 is delivered with NO active password so access to the User Level menu is open. The User Level is set to <1Low>. User Levels can be changed freely until a password has been created. Reset functions (see Section 3.11.9) do not affect the password setting.

To access the User Level function, press **[SPECIAL]** and select **<2level>**.

If NO password yet exists or if the correct password has been entered, the display is:

```
1change user level
2edit password
```

Selecting **<1change user level>** brings up the restriction menu:

```
Restriction: 1none
2low 3medium 4high
```

You can then select the current restriction level, or press **[ESCAPE]** to return to the main run screen.

Selecting **<2edit password>** displays the user password and allows it to be edited. Passwords can be up to six numbers in length and cannot start with a zero.

```
Password: pppppp
0 disables password
```

If **0** is entered as the password value, then the password is made inactive and a password will NOT be required to access the User Level menu. This is the factory default with a security level of **<2low>**.

⚠ Caution

Once a password has been entered, the User Level cannot be changed without reentering the password.

If there is an active password, the PG7000 password entry screen appears.

```
PG7000 NS nnn-xx
Password: pppppp
```

The user must enter the user defined password or the factory **secondary** password to proceed. When a password is entered correctly, operation proceeds to the **<1change user level 2edit password>** screen.

The first field, ***<nnnn>,*** is the serial number of PG7000, followed by a second field, ***<xx>.*** That counts the number of times that a **secondary** password has been used. This second field increments each time a **secondary** password is used. The third field, ***<pppppp>***, is for normal password entry.

The factory ***secondary*** password is available in case the user's password has been misplaced or forgotten. It can be obtained by contacting a Fluke Calibration Authorized Service Provider. The factory ***secondary*** password is different for all PG7000's and changes each time it is used.

원문: Fluke Calibration PG7302 메뉴얼(영문) · 제조사 원문 자료입니다. 사양은 제조사 사정에 따라 변경될 수 있습니다.

3.11.5 <5remote>

PURPOSE

To configure the PG7000 COM1, COM2, COM3 and IEEE-488 communication ports. To test COM1, COM2 and COM3 communications.

PRINCIPLE

PG7000 has three RS232 communications ports referred to as COM1, COM2 and COM3 and a single IEEE-488 port. COM1 and the IEEE-488 port are for communicating with a host computer (see Section 4). COM2 is for communicating with an external barometer and/or vacuum gauge (see Section 3.11.5.4, 3.11.5.5) or for pass through commands to an RS232 device. COM3 is reserved for communications with an automated pressure generation/control component. The communication ports can be set up from the PG7000 front panel.

PG7000 provides a self-test for its RS232 communication ports. The self-test allows verification that the PG7000 RS232 ports (COM1, COM2, COM3) are operating properly and that a valid interface cable is being used. (see Section 3.11.5.3)

OPERATION

To access the port communications settings, press **[SPECIAL]** and select **<5remote>**. Select **<1COM1>**, **<2COM2>**, **<3COM3>** or **<4IEEE-488>** to view and edit that port's communications settings (see Section 4.2.1 for information on COM port settings). Selecting **<2COM2>** includes the choice to set up external barometer communications as well as the port's communications settings. Select **<1settings>** to view and edit COM2 communications settings. Select **<2baro>** to view and edit external barometer communications settings (see Section 3.11.5.4).

To access the RS232 self-test press **[SPECIAL]**, **<5remote>**, **<5RS232test>**.

3.11.5.1 COM1, COM2 AND COM3 (RS232)

The COMx ports can be set for the specific settings required by the user. The settings are baud rate, parity, data bits and stop bits. The available options are found in Table 21.

Table 21. COM1, COM2 and COM3 Available Settings

BAUD RATE	300, 600, 1 200, 2 400, 4 800, 9 600, 19 200
PARITY	NONE, ODD or EVEN
DATA BITS	7 or 8
STOP BITS	1 or 2
TERMINATORS	<CR><LF> or <LF><CR>

The default COMx settings are **2400, E, 7,1, <CR><LF>** or **<LF><CR>** for all three COM ports.

PG7000 appends a carriage return (**<CR>**) and a line feed (**<LF>**) or **<LF><CR>** to all messages that are sent out of the COM1 port to the host. It looks for a carriage return to terminate incoming messages and ignores line feeds. The user MUST wait for a reply to each message sent to PG7000 before sending another message to it (see Section 4.3).

3.11.5.2 IEEE-488

The IEEE-488 port address can be defined from 1 to 31. The default address is **10**.

PG7000 sends a line feed (**<LF>**) and asserts the EOI line at the end of all transmitted messages. It looks for a line feed and/or assertion of the EOI line to terminate incoming messages.

© 2011 Fluke Calibration

원문: Fluke Calibration PG7302 메뉴얼(영문) · 제조사 원문 자료입니다. 사양은 제조사 사정에 따라 변경될 수 있습니다.

TS-TL-FLK-093

we measure, we calibrate, we validate.
㈜테솔 · www.tessol.com TS-TL-FLK-093 123 / 214
KOLAS 국제공인교정기관 · ISO/IEC 17025

3.11.5.3 RS232 Self Test

The RS232 self-test is provided to check the PG7000 COM ports and the interface cable independently of an external device or computer.

If you are having difficulty communicating with PG7000 from a host computer using RS232, the RS232 self test can help establish that the PG7000 COM1 port you are trying to communicate with and the interface cable you are using are good.

To run a self test of the RS232 ports (COM1 and COM2 or COM1 and COM3), press **[SPECIAL]** and select **<5remote>**, **<5RS232test>**. Then select **<1COM2>** to test COM1 and COM2 or **<2COM3>** to test COM1 and COM3.

The display prompts you to connect COM1 to COM2 or COM1 to COM3 using a standard pin-to-pin DB-9F to DB-9M RS232 cable (see Section 4.2.1).

Once the cable has been installed, press **[ENTER]** to run the self-test. The test is first executed in the COM1→COM2 (or COM3) direction and then in the COM2 (or COM3) →COM1 direction.

If the COM1→COM2 (or COM3) test passes: <PASSED> displays briefly and the test proceeds to COM2 (or COM3) →COM1.

If COM2 (or COM3) →COM1 passes: <PASSED> is displayed briefly followed by the conclusion, <PG7000 RS232 test has PASSED>.

If a test fails: Execution is suspended until **[ENTER]** is pressed.

Note

- **The PG7000 RS232 test can fail for three reasons:**
  1. **The RS232 cable being used is incorrect (see Section 4.2.1, for information on the correct cable).**
  2. **COM1 and COM2 (or COM3) do NOT have the same serial communications settings and therefore cannot communicate together (see Section 3.11.5.1 to set the COM ports).**
  3. **One of the COM ports is defective.**
- **The reason for failed communications is almost always a cable or incorrect RS232 interface settings. Be sure that these are correct before concluding that a COM port is defective.**

3.11.5.4 External Barometer (RPM) Communications (COM2)

❍ **PURPOSE**

To set up communications with an external barometer from which PG7000 will read the value of atmospheric pressure used in its internal calculations. The external device is also used for reading the static pressure when PG7601 is used in differential mode (see Section 3.9.4).

Note

The source of the values of atmospheric pressure used by PG7000 in its internal calculations is determined by the AtmP setting in the current SETUP file (see Section 3.10). Setting up communications with an external barometer does NOT set PG7000 to utilize the external barometer.

❍ **PRINCIPLE**

PG7000 uses atmospheric pressure values in its calculations of reference pressure (see Section 7.2). The source of the value is determined by the AtmP setting in the current SETUP file (see Section 3.10). One of the possible sources is *COM2*, which allows an external barometer, connected to PG7000's COM2

원문: Fluke Calibration PG7302 메뉴얼(영문) · 제조사 원문 자료입니다. 사양은 제조사 사정에 따라 변경될 수 있습니다.

RS232 port to be read automatically to obtain the atmospheric pressure values that are used. In order to communicate with an the external barometer PG7000's COM2 must be properly set up. This setup occurs by pressing **[SPECIAL]** and selecting **<5remote>**, **<2COM2>**, **<2baro>**.

❍ **OPERATION**

To set up PG7000's COM2 port to communicate with an external barometer, press **[SPECIAL]** and select **<5remote>**, **<2COM2>**, **<2baro>**. Select **<1RPMx>** if the external barometer is a RPM. Select **<2user>** to set up communications with a barometer other than a Fluke Calibration RPM.

Setting Up for User Barometer Communications

Note

For a remote barometer to be able to be used for automated atmospheric pressure readings on PG7000 COM2, the following requirements apply to the remote barometer's communications:

- **Replies to a request to send string within 2 seconds.**
- **Accepts <CR, LF> terminators.**
- **Supplies <CR> or <CR, LF> terminators.**
- **Request to send string must be printable alphanumeric (no control modes or nulls).**

After pressing **[SPECIAL]** and selecting **<5remote>**, **<2COM2>**, **<2baro>**, **<2user>**, the display is:

```
COM2 meas req string
```

The string value is entered on the second line. It may have up to 20 characters. When the string screen is opened, the cursor is on the first character. Numerical values can be entered directly from the keypad. In addition, the **[←]** and **[→]** keys can be used to toggle through a list of available alpha numeric characters. Holding the key steps through the characters. Character order going up (**[→]**) is: *blank space, symbols, lower case letters, upper case letters, numbers*. Press **[ENTER]** to select a character and move to the next character. When a character is selected the cursor moves to the next character. To leave a character blank, press **[ENTER]** with the field for that character blank. After the last character has been entered, press **[ESCAPE]**. This causes a **<Save edits?>** screen to appear. Select **<2yes>** to save the edited string and move to the next screen. Select **<1no>** abandon the edits. Also, if **[ENTER]** is pressed on the 20th character, the string is saved automatically and operation advances to the next screen.

Note

The external barometer parameters including the communication string can also be set by remote command, which is more convenient than front panel entry (see Section 4.3.4.2, "UDD" command).

After the string value has been entered the display is:

```
Reply conv coef:
1.000000 Pa/unit
```

<conv coef> is the conversion coefficient that PG7000 will use to convert readings from the external barometer to the pressure unit of measure Pascal **[Pa]**. If the readings from the external barometer are NOT Pascal, edit the conversion coefficient value as needed to convert the readings to Pascal.

© 2011 Fluke Calibration

원문: Fluke Calibration PG7302 메뉴얼(영문) · 제조사 원문 자료입니다. 사양은 제조사 사정에 따라 변경될 수 있습니다.

When the conversion coefficient is entered the next setup screen is opened. The display is:

```
Leading characters to
Strip: 0
```

This entry specifies the leading characters in the return string that precede the numerical value of the pressure. PG7000 will strip the specified number of characters from the front of the return string and assume that the next character is the first number defining the current value of atmospheric pressure.

To verify whether external barometer communications have been set up properly, select a SETUP file that specifies COM2 under AtmP (see Section 3.10) and verify that communications with the external barometer are achieved. Then view current barometer readings in the AMBIENT run screen (see Section 3.9.6) and verify that the readings are correct. Note that a fluid head correction should be set if the external barometer is not at the PG7000 reference level. This correction may cause the reading of the external barometer and the value of ambient pressure indicated by the PG7000 to not be identical (see Section 3.11.3.3).

Note

For communications with an external barometer on COM2 to be established properly, the inquiry string to send to the barometer must be defined following this section and the PG7000 COM2 port and barometer COM port must have the same communications settings. Press [SPECIAL] and select <5remote>, <2COM2>, <1settings> to set up PG7000 COM2 communications settings. When unable to establish communications between COM2 and the external barometer, consider using the PG7000 RS232 self test to verify COM2 operation (see Section 3.11.5.3). If both a barometer and a vacuum gauge are connected, the barometer must always be the first device connected to the PG7000 Platform COM2.

3.11.5.5 External Vacuum Gauge Communications (COM2) (PG7601 Only)

❍ **PURPOSE**

To set up communications with an external vacuum gauge from which PG7601 will read the value of reference vacuum under the bell jar used in the calculation of absolute pressure in absolute by vacuum measurement mode (see Section 3.9.4).

Note

The source of the value of vacuum pressure used by PG7000 in its internal calculations is determined by the Vac setting in the current SETUP file (see Section 3.10). Setting up communications with an external vacuum gauge does NOT set PG7601 to utilize the external vacuum gauge.

원문: Fluke Calibration PG7302 메뉴얼(영문) · 제조사 원문 자료입니다. 사양은 제조사 사정에 따라 변경될 수 있습니다.

TESSOL Technical Library

TS-TL-FLK-093

we measure, we calibrate, we validate.

㈜테솔 · www.tessol.com TS-TL-FLK-093 126 / 214

KOLAS 국제공인교정기관 · ISO/IEC 17025

❍ PRINCIPLE

PG7601 uses a value of reference vacuum under the bell jar in its calculation of the pressure defined by the PG in absolute by vacuum measurement mode (see Section 7.2). The source of the value is determined by the Vac setting in the current SETUP file (see Section 3.10). One of the possible sources is *COM2*, which allows an external vacuum gauge, connected to PG7601's COM2 RS232 port to be read automatically to obtain the reference vacuum values that are used. In order to communicate with the external vacuum gauge, PG7601's COM2 must be properly set up. This setup occurs by pressing **[SPECIAL]** and selecting **<5remote>**, **<2COM2>**, **<3vac>**.

Note

If a RPM is being used on COM2 for external measurement of barometric pressure, the vacuum gauge may be connected to COM2 of the RPM. In this case, COM2 of the RPM barometer must be set to have the same communication settings as the external vacuum gauge. If both a barometer and a vacuum gauge are connected, the barometer must always be the first device connected to the PG7000 Platform COM2.

❍ OPERATION

To set up PG7601's COM2 port to communicate with an external vacuum gauge, press **[SPECIAL]** and select **<5remote>**, **<2COM2>**, **<3vac>**. Select **<1RPMx>** if the external barometer is a RPM. Select **<2user>** to set up communications with a vacuum gauge other than a Fluke Calibration RPM.

Setting Up for User Vacuum Gauge Communications

Note

For an external vacuum gauge to be able to be used for automated reference vacuum readings on PG7601 COM2 or a RPM's COM2, the following requirements apply to the remote vacuum gauge's communications:

- **Replies to a request to send string within 2 seconds.**
- **Accepts <CR, LF> terminators.**
- **Supplies <CR> or <CR, LF> terminators.**
- **Request to send string must be printable alphanumeric (no control modes or nulls).**

After pressing **[SPECIAL]** and selecting **<5remote>**, **<2COM2>**, **<3vac>**, **<2user>**, the display is:

```
COM2 meas req string
```

The string value is entered on the second line. It may have up to 20 characters.

When the string screen is opened, the cursor is on the first character. Numerical values can be entered directly from the keypad. In addition, the **[←]** and **[→]** keys can be used to toggle through a list of available alpha numeric characters. Holding the key steps through the characters. Character order going up (**[→]**) is: *blank space, symbols, lower case letters, upper case letters, numbers*. Press **[ENTER]** to select a character and move to the next character. When a character is selected the cursor moves to the next character. To leave a character blank, press **[ENTER]** with the field for that character blank. After the last character has been entered, press **[ESCAPE]**. This causes a **<Save edits?>** screen to appear. Select **<2yes>** to save the edited string and move to the next screen. Select **<1no>** abandon the edits. Also, if **[ENTER]** is pressed on the 20th character, the string is saved automatically and operation advances to the next screen.

© 2011 Fluke Calibration

원문: Fluke Calibration PG7302 메뉴얼(영문) · 제조사 원문 자료입니다. 사양은 제조사 사정에 따라 변경될 수 있습니다.

Note

The external vacuum gauge parameters including the communication string can also be set by remote command which is more convenient than front panel entry (see Section 4.3.4.2, "UDV" command).

After the string value has been entered the display is:

```
Reply conv coef:
1.000000 Pa/unit
```

<conv coef> is the conversion coefficient that PG7600 will use to convert readings from the external vacuum gauge to the pressure unit of measure Pascal **[Pa]**. If the readings from the external vacuum gauge are NOT Pascal, edit the conversion coefficient value as needed to convert the readings to Pascal.

When the conversion coefficient is entered the next setup screen is opened. The display is:

```
Leading characters to
Strip: 0
```

This entry specifies the leading characters in the return string that precede the numerical value of the pressure. PG7601 will strip the specified number of characters from the front of the return string and assume that the next character is the first number defining the current value of reference vacuum.

To verify whether external vacuum gauge communications have been set up properly, select a SETUP file that specifies COM2 under Vac (see Section 3.10) and verify that communications with the external vacuum gauge are achieved. Then view current vacuum readings in the AMBIENT run screen (see Section 3.9.6) and verify that the readings are correct.

Note

For communications with an external vacuum gauge on COM2 to be established properly, the inquiry string to send to the vacuum gauge must be defined following this section and the PG7000 COM2 port and vacuum gauge COM port must have the same communications settings (or if the vacuum gauge is connected to COM2 of a RPM, the RPM3 COM2 and vacuum gauge COM port must have the same communication settings. Press [SPECIAL] and select <5remote>, <2COM2>, <1settings> to set up PG7000 COM2 communications settings. When unable to establish communications between COM2 and the external vacuum gauge, consider using the PG7000 RS232 self test to verify COM2 operation (see Section 3.11.5.3).

3.11.6 <6GL>

- **PURPOSE**

To view and set the value of local gravity used by PG7000 in reference pressure calculations (see Section 7.2) when *gl* is specified as the gravity value in SETTINGS (see Section 3.10).

- **OPERATION**

To access the PG7000 local gravity value (gl), press **[SPECIAL]** and select **<6gl>**. The display is:

```
Local gravity:
9.806650 m/s2
```

The value displayed is the PG7000 local gravity value. This value can be edited unless it is protected by the current security level. The default value is normal gravity of 9.806650 m/s^2.

원문: Fluke Calibration PG7302 메뉴얼(영문) · 제조사 원문 자료입니다. 사양은 제조사 사정에 따라 변경될 수 있습니다.

TESSOL Technical Library

TS-TL-FLK-093

we measure, we calibrate, we validate.

㈜테솔 · www.tessol.com TS-TL-FLK-093 128 / 214

KOLAS 국제공인교정기관 · ISO/IEC 17025

Note

The local gravity (gl) value may or may not be used by PG7000 in its calculations of defined pressure. Whether gl or another value, such as normal gravity, is used is determined by the current SETUP file (see Section 3.10), not by what is entered by pressing [SPECIAL] and selecting <6gl>.

3.11.7 <7cal>

❍ PURPOSE

To view the output of and adjust or calibrate PG7000's internal sensors and measurement systems including:

Barometric pressure	Ambient relative humidity
Ambient temperature	Piston-cylinder module temperature
Vacuum (PG7601 only)	Piston position
Piston rotation rate	

Note

In normal operation, the measurements made by PG7000s internal sensors can be viewed in the SYSTEM and AMBIENT run screens by pressing [SYSTEM] or [AMBIENT] (see Sections 3.9.5 and 3.9.6).

❍ PRINCIPLE/OPERATION

PG7000 internal sensor adjustment functions are considered part of PG7000 maintenance and are covered in the maintenance section of this manual (see Section 5).

3.11.8 <8AMH>

❍ PURPOSE

Control optional AMH automated mass handling system directly and view its status (see the AMH-38/AMH-100 Operation and Maintenance Manual for information).

❍ PRINCIPLE

An optional automated mass handling system is available for PG7000 Platforms. AMH-38 is used with PG7601 and AMH-100 is used with other models.

Operation of the AMH is integrated into PG7000 Platform operation so that mass handling occurs automatically when necessary. **[SPECIAL]**, **<8AMH>** accesses functions to view the current mass loading status, load all masses, unloaded all masses and load specific masses.

❍ OPERATION

To access the AMH status and control functions, an AMH automated mass handler must already be initialized by selecting an AMH type mass set (see Section 3.11.1.10). To access the AMH status and control functions, press **[SPECIAL]**, **<8AMH>**.

Select **<1status>** for a display of the current loaded/not loaded status of AMH masses (the indication is the same as the discreet control function screen in Section 3.11.8.2).

Select **<2control>** to control AMH directly:

Select **<1up/down>** to move the AMH mass handler up or down (see Section 3.11.8.1).

Select **<2discreet>** to specify masses to be loaded and unloaded (see Section 3.11.8.2).

Select **<3loadall>** to load all the AMH masses onto the piston (see Section 3.11.8.3).

Select **<4unloadall>** to unload all the AMH masses from the piston (see Section 3.11.8.3).

© 2011 Fluke Calibration

원문: Fluke Calibration PG7302 메뉴얼(영문) · 제조사 원문 자료입니다. 사양은 제조사 사정에 따라 변경될 수 있습니다.

TS-TL-FLK-093

we measure, we calibrate, we validate.
㈜테솔 · www.tessol.com TS-TL-FLK-093 129 / 214
KOLAS 국제공인교정기관 · ISO/IEC 17025

3.11.8.1 <2control>, <1up/down>

❍ **PURPOSE**

To move the AMH mass load to the up or down position (see the AMH-38/ AMH-100 Operation and Maintenance Manual).

❍ **OPERATION**

To move the AMH mass handler to the up and down positions, press **[SPECIAL]**, **<8AMH>**, **<1up/down>**.

The display indicates the current position. Press **[ENTER]** to change the position.

⚠ Caution

Do not put your fingers or anything else under the AMH trim mass tray. When the mass load is lowered, it will pinch or crush anything under it.

3.11.8.2 <2control>, <2discreet>

❍ **PURPOSE**

To load and unload specifc AMH masses.

❍ **OPERATION**

To load and unload specific AMH masses, press **[SPECIAL]**, **<8AMH>**, **<2control>**, **<2discreet>**.

The display is (64 is present only with AMH-100):

```
1* 2  4* 8  16  32
64  Main:1
```

The **<1>**, **<2>**, **<4>**, **<8>**, **<16>**, **<32>** and **<64>** indicate the 0.1, 0.2, 0.4, 0.8, 1.6, 3.2 and 6.4 kg masses. **<*>** indicates that the mass is loaded. Move the cursor to a mass and press **[+/-]** or **[.]** to change its status.

<Main:> indicates the number of main masses that are loaded. Edit this number to the desired value.

If any condition in the discreet display is changed the bottom right of the display changes to **<ENT loads>**. Press **[ENTER]** to causes AMH to operate to load the new mass configuration. Press **[ESCAPE]** to return to the AMH menu with no change in mass load.

⚠ Caution

Do not put your fingers or anything else under the AMH trim mass tray. When the mass load is lowered, it will pinch or crush anything under it.

3.11.8.3 <2control>, <3loadall>

❍ **PURPOSE**

To clear the AMH mass handler and cause all the masses in the AMH mass set to be loaded onto the piston. The function is used to remove all the masses from the AMH mass handler and prepare it to be removed or installed on the PG7000 platform.

❍ **OPERATION**

To load all AMH masses, press **[SPECIAL]**, **<8AMH>**, **<3loadall>**. Confirm the loadall instruction and AMH proceeds to lower all the masses onto the piston.

⚠ Caution

Do not put your fingers or anything else under the AMH trim mass tray. When the mass load is lowered, it will pinch or crush anything under it.

원문: Fluke Calibration PG7302 메뉴얼(영문) · 제조사 원문 자료입니다. 사양은 제조사 사정에 따라 변경될 수 있습니다.

3.11.8.4 <2control>, <4unloadall>

❍ **PURPOSE**

To clear the AMH mass handler and cause all the masses in the AMH mass set to be unloaded from the piston (retained in the AMH automated mass hander).

❍ **OPERATION**

To unload all AMH masses, press [SPECIAL], <8AMH>, <4unloadall>. Confirm the unloadall instruction and AMH proceeds to raise all the masses off the piston. When the mass handler lowers, the bell and mass lifting shaft are still loaded on the piston.

⚠ Caution

Do not put your fingers or anything else under the AMH trim mass tray. When the mass load is lowered, it will pinch or crush anything under it.

3.11.9 <9reset>

❍ **PURPOSE**

To reset various PG7000 settings to default or factory values.

PG7000 stores its user definable settings in non-volatile memory. The reset menu allows the user to selectively or completely reset these settings to factory defaults. Resets clear settings that the user may have made, and should be used only to restore the PG7000 to a known state. PG7000 will go through its reboot routine after any type of reset is executed.

❍ **OPERATION**

To access the reset choices press **[SPECIAL]** and select **<9reset>**. The display is:

```
1sets 2units 3com
4cal 5setups 6all
```

Select the desired reset. After confirmation, the reset occurs. A reset always puts PG7000 through its start up routine as if power had been turned OFF and back ON.

See Sections 3.11.9.1 through 3.11.9.6 for detailed information on the specific reset choices.

⚠ Caution

Reset functions change user settings that affect pressure measurement. If not used properly, resetting can cause out of tolerance measurements. Reset functions should only be used by qualified personnel with reference to this manual for information on the reset functions.

3.11.9.1 <9reset>, <1sets>

❍ **PURPOSE/OPERATION**

To access Reset - Sets, press **[SPECIAL]** and select **<1reset>**, **<1sets>**.

Reset - Sets clears and sets to default the user settings. This includes:

- Pressure unit of measure to pressure unit #1 of **[UNIT]** (see Section 3.9.3).
- Measurement mode to gauge (see Section 3.9.4).
- DUT head height to zero and ATM head height to -10 cm (see Sections 3.9.7, 3.11.3.3).
- DUT head height units to centimeters (see Section 3.11.3.2).
- PISTON head correction ON (PG7302 only) (see Section 3.11.3.4).
- Set up file to #1 (see Section 3.10).
- Active piston-cylinder module, mass set and mass loading bell to #1 (first in list) (see Sections 3.11.1.5, 3.11.1.10, 3.11.1.15).
- Mass loading resolution to 0.01 g (see Section 3.9.10).

© 2011 Fluke Calibration

원문: Fluke Calibration PG7302 메뉴얼(영문) · 제조사 원문 자료입니다. 사양은 제조사 사정에 따라 변경될 수 있습니다.

TS-TL-FLK-093

we measure, we calibrate, we validate.
㈜테솔 · www.tessol.com TS-TL-FLK-093 131 / 214
KOLAS 국제공인교정기관 · ISO/IEC 17025

- Automatic rotation off (see Section 3.9.8).
- Automatic rotation pre-decel on (see Section 3.9.8.1).
- Automatic pressure generation off (see Section 3.9.9).
- Automatic pressure generation controller raise function to OFF (see Section 3.9.9.2).
- Automatic pressure generation controller tolerance to 0.05% of full scale (see Section 3.9.9.4).
- Automatic pressure generation controller refloat function to ON (see Section 3.9.9.5).
- Mode to *pressure to mass* (see Section 3.9.12).
- Screen saver to 10 minutes (see Section 3.11.4.1).
- PC sounds to ON and keyboard sounds to medium frequency (see Section 3.11.4.2).

3.11.9.2 <9reset>, <2units>

❍ PURPOSE/OPERATION

To access Reset - Units, press **[SPECIAL]** and select **<1reset>**, **<2units>**.

Reset - Units clears and sets to default all unit of measure functions. This includes:

- **[UNIT]** pressure unit of measure selections to defaults and active unit to #1 (see Section 3.9.3).
- Sets the user pressure unit coefficient to 1.00/Pa (see Section 3.9.3.1).

3.11.9.3 <9reset>, <3com>

❍ OPERATION/PURPOSE

To access Reset - Com, press **[SPECIAL]** and select **<1reset>**, **<3com>**.

Reset - Com clears and sets to default the PG7000 communications ports (see Section 3.11.5). This includes:

COM1, COM2 and COM3	
Baud Rate	2 400
Parity	Even
Data Bits	7
Stop Bits	1
Terminating Characters	<CR>, <LF>
IEEE-488 (GPIB)	
Address	10
Terminating Characters	<CR>, <LF>
COM2 User Barometer Inquiry String and Characters	Learned (see Section 3.10.9.4)

3.11.9.4 <9reset>, <4cal>

❍ OPERATION/PURPOSE

⚠ Caution

Use special caution with this reset as critical calibration data may be altered.

To access Reset - Cal, press **[SPECIAL]** and select **<1reset>**, **<4cal>**.

Reset - Cal DOES NOT reset piston-cylinder module, mass set and mass bell files. There is no user available reset for them.

원문: Fluke Calibration PG7302 메뉴얼(영문) · 제조사 원문 자료입니다. 사양은 제조사 사정에 따라 변경될 수 있습니다.

we measure, we calibrate, we validate. ㈜테솔 · www.tessol.com TS-TL-FLK-093 132 / 214

KOLAS 국제공인교정기관 · ISO/IEC 17025

TESSOL Technical Library TS-TL-FLK-093

Reset - Cal clears and sets to default the user calibration coefficients for PG7000 on-board sensors (see Section 5.2.1). This includes:

Barometric Sensor

Adder	0
Multiplier	1
Calibration Date	19980101

Humidity Sensor

Adder	0
Multiplier	1
Calibration Date	19980101

Ambient Temperature Sensor

Adder	0
Multiplier	1
Calibration Date	19980101

Piston-Cylinder Module Temperature Sensor

RZ	100.000 Ω
Slope	0.3896
Calibration Date	19980101

Vacuum Gauge (PG7601 Only)

Adder	0
Multiplier	1
Calibration Date	19980101

Note

Reset - Cal has NO effect on the reference resistance values used to calibrate PG7000s internal ohmic measurement system (see Section 5.3).

3.11.9.5 <9RESET>, <5SETUPS>

To access Reset - Setups, press **[SPECIAL]** and select **<1reset>**, **<5setups>**.

Reset - Setups deletes all SETUP files and selects SETUP file #1 as the active SETUP file (see Section 3.10).

3.11.9.6 <9reset>, <6all>

❍ OPERATION/PURPOSE

To return PG7000 to the original, as delivered, factory condition.

To access Reset - All, press **[SPECIAL]** and select **<1reset>**, **<6all>**.

- Performs the functions of the Sets, Units, Cal and Com resets (see Sections 3.11.9.1 to 3.11.9.5).
- User security level to low, but does not affect the User Level password (see Section 3.11.8).
- Local gravity to 9.80665 m/s^2 (see Section 3.11.6)

© 2011 Fluke Calibration

원문: Fluke Calibration PG7302 메뉴얼(영문) · 제조사 원문 자료입니다. 사양은 제조사 사정에 따라 변경될 수 있습니다.

we measure, we calibrate, we validate.
KOLAS 국제공인교정기관 · ISO/IEC 17025
㈜테솔 · www.tessol.com TS-TL-FLK-093 133 / 214

TS-TL-FLK-093

Notes

원문: Fluke Calibration PG7302 메뉴얼(영문) · 제조사 원문 자료입니다. 사양은 제조사 사정에 따라 변경될 수 있습니다.

4. Remote Operation

4.1 Overview

Most of the PG7000 Terminal's front panel functions can also be executed by commands from a remote computer. The host computer can communicate with PG7000 using the COM1 RS232 port or the IEEE-488 port located on the PG7000 Platform rear panel. The command syntax is the same for either port except when using the IEEE STD. 488.2 Common commands.

4.2 Interfacing

Sending a command to PG7000 places it in remote mode. The function keys on the front panel are locked-out, except for the **[SYSTEM]** and **[AMBIENT]** keys which still respond to allow the user to change the data displayed. Pressing the **[ESC]** key returns PG7000 to local mode unless the "REMOTE" command was sent which locks out keypad operation until the "LOCAL" command is sent.

Most remote commands return a reply within 500 ms. The following commands may query external devices connected to PG7000's COM2 and/or COM3 ports and can take up to 5 seconds to reply:

"MASS=" (possible communications with an external AMH mass handler)
"PGEN=" (requires communications with an external pressure controller)
"SETUP=" (possible communications with external barometer or vacuum gage)

You **must** wait for this reply before issuing another command to PG7000. This ensures that PG7000 has completed the command. An exception is the use of any of the IEEE STD. 488.2 Common Commands (see Section 4.3.4.1) via the IEEE-488 interface (common commands all start with an asterisk, "*"). The common commands only generate a reply if using the COM1 port or if the query form of the common command is used (command followed by a "?").

4.2.1 RS232 Interface

To establish RS232 communications a standard pin-to-pin DB-9F to DB-9M RS232 cable must be used to connect the host COM port to PG7000 COM1. The interface settings of both ports must be the same.

Note

PG7000 supports an independent RS232 self-test to verify that the PG7000 RS232 ports are operating correctly and the interface cable being used is valid. Use this self-test to troubleshoot if you are having difficulty establishing communications with any PG7000 COM1 (see Section 3.11.5.3).

4.2.1.1 COM1

The PG7000 COM1 RS232 interface is located on the PG7000 Platform rear panel. It is a 9-pin female DB-9F connector configured as a DCE device. Data is transmitted out of PG7000 using pin 2, and is received on pin 3. This allows a standard pin-to-pin DB-9M to DB-9F RS232 cable to be used to connect to a DTE host. Handshaking is NOT required or supported.

COM1 RS232 commands must be terminated with at least a single carriage return character, while line feed characters are ignored. All RS232 responses from PG7000 are terminated with a carriage return character and a line feed character (either **<CR><LF>** or **<LF><CR>** see Section 3.11.5.1).

© 2010 Fluke Calibration

원문: Fluke Calibration PG7302 메뉴얼(영문) · 제조사 원문 자료입니다. 사양은 제조사 사정에 따라 변경될 수 있습니다.

Table 22. COM1 DB-9F Pin Designation

IBM PC/XT DB-9F CONNECTIONS		IBM PC/XT DB-9M to PG7000 DB9F CONNECTIONS	
DB-25M	DB-9F	DB-9M	DB-9F
2	3	3	3
3	2	2	2
7	5	5	5

4.2.1.2 COM2 AND COM3

The PG7000 COM2 and COM3 RS232 interfaces are located on the PG7000 Platform rear panel. They are 9-pin male DB-9M connectors configured as a DTE device. Data is transmitted out of PG7000 using pin 3 and is received on pin 2. This allows a standard pin-to-pin DB-9F to DB-9M RS232 cable to be used to connect to a DCE slave. Handshaking is NOT required or supported.

COM2 and COM3 are used by the PG7000 Platform to communicate with external devices. An external barometer and/or vacuum gauge can be connected to COM2 (see Sections 3.11.5.4, 3.11.5.5). An automated pressure control component can be connected to COM3.

Table 23. COM2 and COM3 DB-9M Pin Designation

PIN #	FUNCTION	DESCRIPTION
2	RxD	This pin accepts serial data from another PG7000 or another device.
3	TxD	This pin transmits serial data from the PG7000 to another PG7000 or another device.
4	DTR	Data Terminal Ready. Held at 5 Volts.
5	Grn	This pin is the common return for the TxD and RxD signals.

IBM PC/XT DB-25F to DB-9M CONNECTIONS		IBM PC/XT DB-9F to PG7000 DB9M CONNECTIONS	
DB-25F	DB-9M	DB-9F	DB-9M
2	3	3	3
3	2	2	2
7	5	5	5

4.2.2 IEEE-488 (GPIB)

The PG7000 IEEE-488 interface is located on the PG7000 Platform rear panel. The physical and electrical interface conforms to IEEE Std 488.1-1987 Subset E2 and IEEE Std. 488.2-1992. You should NOT attempt to communicate with the IEEE-488 interface while using the COM1 interface. The IEEE-488 receive buffer is 250 bytes deep. PG7000 will hold OFF release of the NRFD handshake line until it can service and empty the receive buffer. This keeps the buffer from overflowing.

IEEE-488 commands must be terminated with a single line feed character along with the assertion of the EOI line. All IEEE-488 responses from PG7000 are terminated with a line feed character along with the assertion of the EOI line. Replies are held in a buffer until the host computer gets them, so it is possible to have old replies in this buffer, while you are expecting new replies from a just issued command.

원문: Fluke Calibration PG7302 메뉴얼(영문) · 제조사 원문 자료입니다. 사양은 제조사 사정에 따라 변경될 수 있습니다.

TS-TL-FLK-093

we measure, we calibrate, we validate. ㈜테솔 · www.tessol.com TS-TL-FLK-093 136 / 214

KOLAS 국제공인교정기관 · ISO/IEC 17025

Address	10
Terminating Characters	**<CR>** and **<LF>** with EOI asserted with **<LF>**
IEEE Local Functions Supported	SH1, AH1, T4, L2, RL2, DC2 Parallel poll mode is not supported
Physical Interface	IEEE-488.2 with tri-state bus drivers
IEEE-488	To establish IEEE-488 communications the host computer must have an IEEE-488 card and PG7000 must be correctly addressed. PG7000's IEEE-488 address can be set locally from the front panel using **[SPECIAL]**, **<5Remote>** (see Section 3.11.5.2). An IEEE-488 interface cable must be used.

4.3 Commands

4.3.1 Command Syntax

All PG7000 commands are ASCII strings. The user **must** wait for PG7000 to reply before sending another command. An exception to this is the use of any of the IEEE Std. 488.2 Common Commands via the IEEE-488 interface (these Common Commands are shown first in 4.3.4.1 and always start with an asterisk: "*"). The common commands only generate a reply if using the COM1 port or if the query form of the common command is used (command followed by a "?").

4.3.2 COMMAND summary

Table 24. Command Summary

COMMAND	DESCRIPTION
ABORT	Interrupt PG7000 activity and put it in an idle state
AMPHx(=)	Set or read the source for ambient humidity
AMBPx(=)	Set or read the source for ambient pressure
AMBTx(=)	Set or read the source for ambient temperature
AMB	Read back the current ambient conditions
AMHERR	Read error messages from AMH automated mass handler
AMHLOAD(=)	Load or unload all AMH masses
AMHMS(=)	Read or set the discreet AMH mass load
AROT(=)	Set or read the current automated motorized rotation status
ATMHEIGHT(=)	Set or read the ATM head height
BELL(=)	Read or select the mass loading bell to use
BELLx(=)	Read or set a mass loading bell's information
CALx(=)	Set or read the calibration coefficients for an internal sensor
*CLS	Clear the status registers and all queues
COMx(=)	Set or read the COMx port configuration
DATE(=)	Set or read the current date
DIFLOAD	Execute the mass load determined by the DIFSETUP command
DIFOFFSET(=)	Read or set the differential mode RPM offset value
DIFSETUP	Prepare PG7601 to determine the differential mode RPM offset
DUTHEIGHT(=)	Set or read the DUT head height
*ESE(?)	Read or set the Event Status Enable Register
ERR	Read the last error message
*ESR?	Read the Event Status Register
HLDFALL	Read the results of the last natural fall rate measurement step completed in high line differential mode

© 2011 Fluke Calibration

원문: Fluke Calibration PG7302 메뉴얼(영문) · 제조사 원문 자료입니다. 사양은 제조사 사정에 따라 변경될 수 있습니다.

TS-TL-FLK-093

we measure, we calibrate, we validate.
KOLAS 국제공인교정기관 · ISO/IEC 17025
㈜테솔 · www.tessol.com TS-TL-FLK-093 137 / 214

COMMAND	DESCRIPTION
HLDLINEP	Set a new line pressure in high line differential mode
HLDVIEW	Read the results of the last line pressure set in high line differential mode
HLDXFLT	Read the results of the last crossfloat fall rate measurement step completed in high line differential mode
*IDN?	Identify the product and software version
LOCALG(=)	Set or read the local gravity
LOCAL	Local operation
MASSSETx(=)	Set or read the mass set values
MASSx(=)	Set or read the mass set data
MASS(=)	Set or read the selected mass set
MEDIA(=)	Set or read the DUT head medium
MEM	Read the memory OK flag
MMODE(=)	Set or read the measurement mode
MRES(=)	Set or read the mass loading resolution
MROT(=)	Set or read the manual motorized rotation status
MR	Read the current mass load
MS=	Specify a new mass target, loading masses if AMH enabled
OHMS	Read the ambient PRT and piston-cylinder PRT resistance
*OPC(?)	Read or set the Operation Complete register (not applicable to the PG7000)
*OPT?	Read the PG7000 options installed
PCTx(=)	Set or read the source for the piston-cylinder temp
PGEN(=)	Set or read the automated pressure generation setting
PISTONRDYx(=)	Set or read piston rotation rate limits.
PISTONVARx(=)	Set or read additional piston variables
PISTONx(=)	Set or read the piston header information
PISTON(=)	Set or read the piston in use
PPC=	Send a command to an external pressure generation/control component.
PPCPR	Read the pressure measured by a PPC pressure controller connected to PG7000's COM3.
PPOS	Read the current piston position
PRTPC	Set or read the piston cylinder temperature PRT information
PR	Read the current PG7000 defined pressure and "ready" status
PS=	Specify a new PG7000 target pressure, loading masses if AMH enabled
READYx(=)	Set or read the ready criteria for a specific "Setup"
READYCK(=)	Set or read the ready check flag status
REMOTE	Set the PG7000 into local lockout condition
RESET	Set basic PG7000 operating conditions to default. Equivalent to front panel "Reset, Sets".
RESUME	Resume the suspended process of setting a new pressure by remote command.
RESUME(=mode)	Set the resume mode, which determines whether a pressure setting process initiated by remote command will pause after target entry and require the RESUME comand to continue .
RPM(x)	Send a command to an external Fluke Calibration RPM connected to COM2
*RST	Reset user settings to factory defaults
SETUP(=)	Set or read the setup to use
SN	Read the PG7000 serial number
SPEED	Read the piston rotation speed
*SRE(?)	Read or set the Service Request Register
*STB?	Read the Status Byte

원문: Fluke Calibration PG7302 메뉴얼(영문) · 제조사 원문 자료입니다. 사양은 제조사 사정에 따라 변경될 수 있습니다.

COMMAND	DESCRIPTION
TIME(=)	Set or read the current time
*TST?	Read the system self test results
UCOEF	Read the current pressure units conversion coefficient
UDD(=)	Set or read the user defined external barometer settings
UDU(=)	Set or read the user defined pressure unit
UDV(=)	Set or read the user defined external vacuum gage settings
UL(=)	Set or read the upper limit of an external pressure generation/control component.
UNIT(=)	Set or read the current pressure unit
VACPx(=)	Set or read the source for the vacuum measurement
VAC(=)	Set or read the vacuum reference flag
VENT(=)	To vent the test pressure to atmosphere if an automated pressure generation/control component is being used for automatic pressure generation.
VER	Read version number of the internal software
VOL(=)	Read or set the currently active test volume for AutoGen using PG7203 or PG7307 with a PPCH pressure controller
#	Send a command through PG7000 to an external RPM on COM2

4.3.3 Error Messages

The PG7000 always replies to a command. If the command is incorrect or contains invalid data, an error number is returned in the form “ERR# *n*” where *n* is an integer number that represents a specific error. This allows for easy error trapping by the host computer. Table 25 is a list of the possible error numbers and the error description for each.

Table 25. Error Messages

REPLY	DESCRIPTION
ERR #0	OK
ERR #1	First argument missing or out of range
ERR #2	Second argument missing or out of range
ERR #3	Third argument missing or out of range
ERR #4	Fourth argument missing or out of range
ERR #5	Fifth argument missing or out of range
ERR #6	Sixth argument missing or out of range
ERR #7	Seventh argument missing or out of range
ERR #8	Eighth argument missing or out of range
ERR #9	Unknown command
ERR #10	Motorized rotation recovering from overload
ERR #11	Command missing argument
ERR #12	System overpressured
ERR #13	External RPM or PG7000 not detected
ERR #14	User unit not defined
ERR #15	Range jumper setting invalid
ERR #16	Element not defined
ERR #17	UDD not defined
ERR #18	Command not yet available
ERR #19	Not available with gauge units
ERR #20	Not available with vacuum reference
ERR #21	Internal pointer error
ERR #22	Pressure must be below 20 psia

© 2011 Fluke Calibration

원문: Fluke Calibration PG7302 메뉴얼(영문) · 제조사 원문 자료입니다. 사양은 제조사 사정에 따라 변경될 수 있습니다.

we measure, we calibrate, we validate.
㈜테솔 · www.tessol.com TS-TL-FLK-093 139 / 214
KOLAS 국제공인교정기관 · ISO/IEC 17025

TS-TL-FLK-093

REPLY	DESCRIPTION
ERR #23	Option not available or installed
ERR #24	Not available with isolation on
ERR #25	Must be READY set
ERR #26	COM port failed to initialize
ERR #27	Internal device time out error
ERR #28	External device time out error
ERR #29	File not opened
ERR #30	File end
ERR #35	PG7601 must first be setup for differential mode
ERR #36	Mass load invalid
ERR #37	External device invalid
ERR #38	External device configured incorrectly
ERR #39	External device reply invalid
ERR #40	Not ready
ERR #41	Measurement outside limits

4.3.3.1 AMH errors

If the optional AMH mass handler is being used, it can generate it's own error message during operation. This usually occurs if the AMH is not properly setup, or has a mechanical failure. The 3rd character of the "PR" query reply will be an 'E' to indicate if the AMH has failed to operate as expected. If this occurs, you can use the "AMHERR" command to get the specific AMH error message, and refer to the AMH-38/AMH-100 Operation and Maintenance Manual for more details.

4.3.4 Command Descriptions

Each command description gives the full syntax showing usage. Ranges of parameters or parameter types are indicated. There are two types of commands. The Common and Status Commands support IEEE STD 488.2, while the PG7000 commands access all other functions.

4.3.4.1 IEEE Std. 488.2 Common and Status Commands

PG7000 supports a set of commands that are common to all instruments conforming to IEEE Std. 488.2 protocol. Though defined by the IEEE-488.2 standard, they also apply to PG7000 RS232 (COM1) communications. These commands make it easy to perform basic functions for any device that supports them. These command also cover the status reporting commands. Refer to Section 4.4 for details on the status registers mentioned in these commands. Query forms of these commands must be followed by a question mark and IEEE-488.2 Common Commands always start with an asterisk ("*"). Unlike the other PG7000 commands, they must have a space instead of an equals sign ("=") between the command and any arguments. Also unlike the other PG7000 commands, if you are using the IEEE-488 port, the query form (command is immediately followed by a "?") must be used to get a reply. If using the COM1 port and the command is not a query, "OK" will be replied.

원문: Fluke Calibration PG7302 메뉴얼(영문) · 제조사 원문 자료입니다. 사양은 제조사 사정에 따라 변경될 수 있습니다.

TS-TL-FLK-093

we measure, we calibrate, we validate.
㈜테솔 · www.tessol.com TS-TL-FLK-093 140 / 214
KOLAS 국제공인교정기관 · ISO/IEC 17025

∗CLS	
Purpose	Clear all of the status and event structures.
Syntax	"∗CLS"
Remarks	This program message clears the following evens and status registers: Standard Byte Register (STB) Standard Event Status Register (ESR) Error Queue AMH error message Pending OPC operations
Example	Command: "*CLS" Reply: "OK" (using COM1. No reply if IEEE-488 port)

∗ESE(?)	
Purpose	Read or set the Standard Event Status Enable Register.
Syntax	"∗ESE *n*" "∗ESE?"
Parameters	n: '0 to 255' This is the decimal representation of the bit(s) to enable. To enable the PON and QYE bits, the argument would be 128 + 4 = 132.
Query Reply	*n* (0 to 255)
Remarks	The Standard Event Status Enable register determines which bits in the standard Event Status Register are enabled and included in the Status Byte Register (ESB bit), and can assert the SRQ line. The reply is in decimal numeric form.
Example	Command: "*ESE 132" Reply: "OK" (using COM1. No reply if IEEE-488 port) Command: "*ESE?" Reply: "132"

∗ESR?	
Purpose	Read the Standard Event Register.
Syntax	"∗ESR?"
Query Reply	*n* (0 to 255)
Remarks	The Standard Event Register contents are cleared after reading. The reply is in decimal numeric form.
Example	Command: "*ESR?" Reply: "4"

∗IDN?	
Purpose	Identify the PG7000 model, and serial number.
Syntax	"∗IDN?"
Remarks	The identification reply is made up of the manufacturer, the model, the serial number and the software version. Each is separated by a comma.
Query Reply	The version string.
Example	Command: "*IDN?" Reply: "DH INSTRUMENTS INC, PG7102, 1001, Ver2.00 –fhf"

∗OPC(?)	
Purpose	Sets the operation complete bit when all operations have completed.
Syntax	"∗OPC" "∗OPC?"
Remarks	This Command enables PG7000 to set the OPC bit in the Standard Event Status Register when it has completed all pending functions. The Query replies with a "1" when all functions are complete. Since PG7000 does not support overlapping commands, this command has no practical use.
Query Reply	"0" or "1"
Example	Command: "*OPC" Reply: "OK" (using COM1. No reply if IEEE-488 port) Command: "*OPC?" Reply: "1"

© 2011 Fluke Calibration

원문: Fluke Calibration PG7302 메뉴얼(영문) · 제조사 원문 자료입니다. 사양은 제조사 사정에 따라 변경될 수 있습니다.

∗OPT?	
Purpose	Reads the list of installed molbloc RFM options.
Syntax	"∗OPT?"
Remarks	This Query returns any registered option(s) installed in the PG. Each option is separated by a comma.
Query Reply	A comma delimited text field of the installed options.
Example	Command: "*OPT?" Reply: "NONE" (no options installed) Reply: "auto rotation" (auto rotation option)

∗RST	
Purpose	Resets the PG7000 settings to factory settings.
Syntax	"∗RST"
Remarks	This Command sets the PG7000 settings to factory settings which is equivalent to a front panel executed **[SPECIAL], <5Reset>, 1sets**. This does not affect the communications settings.
Example	Command: "*RST" Reply: "OK" (using COM1. No reply if IEEE-488 port)
See Also:	3.11.9.1

∗SRE(?)	
Purpose	Read or set the Service Request Enable Register.
Syntax	"∗SRE *n*" "∗SRE?"
Parameters	n: '0 to 255' This is the decimal representation of the bit(s) to enable. To allow the MAV and ESB bits to assert the SRQ line, the argument would be 32 + 16 = 48. Bit 6 (64) is reserved and cannot be set.
Remarks	The Service Request Enable Register determines which bits of the Status Byte can set the MSS bit of the Status Byte and request service by asserting the SRQ line of the IEEE-488 interface.
Query Reply	*n* (0 to 255)
Example	Command: "*SRE 48" Reply: "OK" using COM1. No reply if IEEE-488 port) Command: "*SRE?" Reply: "48"

∗STB?	
Purpose	Read the Status Byte Register.
Syntax	"∗STB?"
Remarks	The Status Byte Register reflects the general status of the PG. The 'MSS' bit state is represented by bit 6.
Query Reply	*n* (0 to 255)
Example	Command: "*STB?" Reply: "4"

∗TST?	
Purpose	Read the power on self test status.
Syntax	"∗TST?""
Remarks	The PG7000 system memory stores the user settings (units, mode, resolution) and retains them when the unit is shut off. On power up, this memory is checked. If this memory is corrupted, all user settings are reset to default (as if the "∗RST" program message was executed), and the ∗TST query returns a '1'. If PG7000 passed the test on power up OR if the ∗TST query was used at least once since the unit was powered up the reply is '0'.
Query Reply	"0" or "1"
Example	Command: "*TST?" Reply: "1"
See Also	3.11.9.1

원문: Fluke Calibration PG7302 메뉴얼(영문) · 제조사 원문 자료입니다. 사양은 제조사 사정에 따라 변경될 수 있습니다.

we measure, we calibrate, we validate.
㈜테솔 · www.tessol.com TS-TL-FLK-093 142 / 214
KOLAS 국제공인교정기관 · ISO/IEC 17025

4.3.4.2 PG7000 commands

#	
Purpose	To send a command through PG7000 to an external device on COM2.
Syntax	"#ddddd"
Default	N/A
Argument	N/A
Remarks	If PG7000 receives a command from the serial port (COM1) with a "#" as the leading character, the character is stripped off and the command is sent out the secondary serial port (COM2). Any data received from the secondary serial port (COM2) is sent back out the main serial port (COM1) automatically.
Example	Typical command: "#*0100P3" Typical reply: "*000114.503"
Error	3.11.5

ABORT	
Purpose	Aborts any active process executing in the PG7000.
Syntax	"ABORT"
Default	N/A
Argument	N/A
Remarks	The ABORT command places the PG7000 in an Idle state, halting the execution of any active processes. This includes automated AMH mass loads, auto float operations or any differential or high line differential mode preparation sequence.
Example	Typical command: "ABORT" Typical reply: "ABORT"
Error	None
See Also	"PS=", "MS=", AROT, DIFOFFSET, DIFSETUP, HLDLINEP

AMBHx(=)	
Purpose	Set or read the source for the ambient humidity measurement. Also optionally sets the USER defined measurement.
Syntax	"AMBHx=source, meas" "AMBHx=source" "AMBHx"
Default	INTERNAL
Argument	x: The setup number from 1 to 19. See the SETUP command. Setup 21 is reserved for remote communication use only. Source: The measurement source. This can be INTERNAL, DEFAULT (normal) or USER. Meas: The current measurement used. This can only be set if the source argument is USER. If specified, the limit for this argument is 0 to 100 %.
Remarks	PG7000 has an on-board humidity sensor that can be used as the source of ambient humidity values in calculations. You may also request that another source be used for this measurement. The measurement source can be the internal sensor, a user defined fixed value, or a normal value. The SETUP function allows 19 separate source configurations for the various SETUP variables to be saved in 19 files. The SETUP command selects which of the files to make active. Setup number 1 is restricted as INTERNAL only to serve as a manufacturer's fixed Setup, and cannot be changed.
Example	Typical command: "AMBH2=USER,50" Typical reply: "USER, 50 %" Typical command: "AMBH9=INTERNAL" Typical reply: "INTERNAL, 25 %"
Error	See 9.3.2 Error Messages ERR #1 The setup number x is invalid ERR #2 The source argument is invalid ERR #3 The meas argument is invalid
See Also	1.2.1.2, 3.1, 3.9.6, 3.10, SETUP

© 2011 Fluke Calibration

원문: Fluke Calibration PG7302 메뉴얼(영문) · 제조사 원문 자료입니다. 사양은 제조사 사정에 따라 변경될 수 있습니다.

we measure, we calibrate, we validate.
㈜테솔 · www.tessol.com TS-TL-FLK-093 143 / 214
KOLAS 국제공인교정기관 · ISO/IEC 17025

TS-TL-FLK-093

AMBPx(=)		
Purpose	Set or read the source for the ambient pressure measurement. Also optionally sets the USER defined measurement.	
Syntax	"AMBPx=source, meas" "AMBPx=source" "AMBPx"	
Default	INTERNAL	
Argument	x: Source: Meas:	The setup number from 1 to 21. See the SETUP command. Setup 21 is reserved for remote communication use only. The measurement source. This can be INTERNAL, DEFAULT (normal), USER, RPM or the user defined barometer "label". The current measurement used is kPaa. This can only be set if the source argument is USER. If specified, the limit for this argument is 70 to 110 kPaa.
Remarks	PG7000 has an internal atmospheric pressure sensor that can be used as the source of ambient pressure values in calculations. You may also request that another source be used for this measurement. The measurement source can be the internal sensor, a user defined fixed value, the manufacturer's fixed default value, an external RPM, or a user defined external barometer. If an external RPM or a user defined external barometer is chosen, you must setup the COM2 port to the proper settings. It is also advised to set this up prior to selecting the setup to make the device active. If you specify "RPM" or the user defined barometer "label" , then all other barometer source setups set to "RPM" or the user defined barometer will change to this source, as it is a global selection. The SETUP function allows 19 separate source configurations for the various SETUP variables to be saved in 19 files. The SETUP command selects which of the files to make active. Setup number 1 is the manufacturer's preferred Setup, and cannot be changed. The meas argument is used to allow the user to define a fixed value if the source is set to USER. The reply will always include the source and the meas fields.	
Example	Typical command: Typical reply: Typical command: Typical reply:	"AMBP2=USER,101.g0" "USER, 101.90 kPaa" "AMBP9=INTERNAL" "INTERNAL, 98.234kPaa"
Error	See the "UDU" command See the "COM2" command See 9.3.2 Error Messages ERR #1 ERR #2 ERR #3	 The setup number x is invalid The source argument is invalid The meas argument is invalid
See Also	1.2.1.2, 3.1, 3.9.6, 3.10, SETUP, UDU, COM2	

AMBTx(=)		
Purpose	Set or read the source for the ambient temperature measurement. Also optionally sets the USER defined measurement.	
Syntax	"AMBTx=source, meas" "AMBTx=source" "AMBTx"	
Default	INTERNAL	
Argument	x: Source: Meas:	The setup number from 1 to 21. See the SETUP command. Setup 21 is reserved for remote communication use only. The measurement source. This can be INTERNAL, DEFAULT (normal), or USER. The current measurement used is degrees Celsius. This can only be set if the source argument is USER. If specified, the limit for this argument is 0 to 50 ° C.
Remarks	PG7000 has an internal ambient temperature sensor that can be used as the source of ambient temperature values in calculations. You may also request that another source be used for this measurement. The measurement source can be the internal sensor, a user defined fixed value or the manufacturer's fixed default value. The SETUP function allows 19 separate source configurations for the various SETUP variables to be saved in 19 files. The SETUP command selects which of the files to make active. The SETUP command selects which of the 19 to use. Setup number 1 is restricted as INTERNAL only to serve as a manufacturer's fixed Setup, and cannot be changed. The meas argument is used to allow the user to define a fixed value if the source is set to USER. The reply will always include the source and the meas fields.	
Example	Typical command: Typical reply: Typical command: Typical reply:	"AMBT2=USER,22.00" "USER, 22.0 dC" "AMBT9=INTERNAL" "INTERNAL, 23.2 dC"

원문: Fluke Calibration PG7302 메뉴얼(영문) · 제조사 원문 자료입니다. 사양은 제조사 사정에 따라 변경될 수 있습니다.

Error	See 9.3.2 Error Messages ERR #1 The setup number x is invalid ERR #2 The source argument is invalid ERR #3 The meas argument is invalid
See Also	1.2.1.2, 3.1, 3.9.6, 3.10, SETUP

AMB	
Purpose	To read all of the ambient conditions from the sources defined by the current setup.
Syntax	"AMB"
Default	N/A
Argument	none
Remarks	PG7000 calculations use five ambient conditions to calculate the current pressure. The source of these ambient conditions is defined by the current setup (see the SETUP command). These ambient values can be read at once using this command. They are returned along with the measurement units, and are separated by commas. The units and resolution of the measurement fields are fixed. The format returned is: "xxx.xxxx kPaa, xxx.x Paa, xxx %, xx.xx dC, xx.xx dC" The first field is the atmospheric pressure. The second field is the vacuum under the bell jar (PG76XX only). The third field is the relative humidity. The fourth field is the ambient temperature. The fifth field is the piston-cylinder temperature.
Example	Typical command: "AMB" Typical reply: "98,4594 kPaa, 18.3 Paa, 24%, 23.45 dC, 22.53 dC
Error	None
See Also	1.2.1.2, 3.1, 3.9.6, 3.10, SETUP
AMHERR	
Purpose	To read the last known error message from an active external AMH automated mass handler.
Syntax	"AMHERR"
Remarks	If an optional AMH automated mass handler is being used, it can generate it's own error message during operation. This usually occurs if the AMH is not properly setup, for example the drive air pressure is inadequate, or it has a mechanical failure. If the AMH fails to operate at expected., the 3rd character of the "PR" command reply is an "E". If this occurs, you can use the "AMHERR" command to get the specific AMH error message, and refer to the AMH-38/AMH-100 Operation and Maintenance Manual for more details. You should not routinely poll the PG with the AMHERR command, as it may contain a previously saved error that was recoverable by the PG. Instead, use the "PR" command to detect an AMH error first. The AMH error message is cleared by the next successful AMH operation or by sending the "*CLS" command. If there is no error, "OK" is returned.
Example	Typical command: "AMHERR" Typical reply: "ERR#122" (consult AMH-38/AMH-100 Operation and Maintenance Manual) Typical reply: "OK" (no AMH errors or AHM not active)
See Also	AMH-38/AMH-100 Operation and Maintenance Manual, ""PR"

AMHLOAD=	
Purpose	Load or unload all the AMH's masses (used with optional AMH automated mass handling system).
Syntax	"AMHLOAD=action"
Default	N/A
Argument	action:: '0' Unloads masses Loads all masses
Remarks	The optional AMH automated mass handling system can load and unload masses on the PG7000 piston-cylinder automatically. The masses can all be loaded onto the piston or unloaded and held in the mass handling by a single command. Setting '1' causes the AMH to operate to load all the masses. Setting '0' causes the AMH to operate to unload all the masses. This command can only be executed when the an AMH mass set is selected and the AMH is idle. The operation can take several seconds to complete before the PG replies to this command. The PG uses the resulting mass load for its current pressure target. The AMHERR command should be used to check for AMH errors after the load
Example	Typical command: "AMHLOAD=1" Typical reply: "AMHLOAD=1"
Error	ERR #1 Invalid or missing argument ERR# 13 AMH is not enabled ERR# 37 AMH load / unload operation error ERR# 40 AMH is not idle
See Also	3.11.8, 3.11.8.3, 3.11.8.4, AMH Operation and Maintenance Manual

© 2011 Fluke Calibration

원문: Fluke Calibration PG7302 메뉴얼(영문) · 제조사 원문 자료입니다. 사양은 제조사 사정에 따라 변경될 수 있습니다.

we measure, we calibrate, we validate.
㈜테솔 · www.tessol.com TS-TL-FLK-093 145 / 214
KOLAS 국제공인교정기관 · ISO/IEC 17025

TS-TL-FLK-093

AMHMS(=)	
Purpose	Read or set the discrete AMH mass load.
Syntax	"AMHMS=*main, binary*" "AMHMS"
Argument	*main*: The number of main masses to load *bin*: The binary mass load. This is a sum of the binary masses to load: 1: 0.1 kg mass 2: 0.2 kg mass 4: 0.4 kg mass 8: 0.8 kg mass 16: 1.6 kg mass 32: 3.2 kg mass 64: 6.4 kg mass
Remarks	An AMH mass set must be active and an AMH automated mass handler must already be initialized to use this command. The PG7000 will reflect the requested mass load in the displayed pressure measurements. The RESUME command is not required to initiate the auto float sequence when automatic pressure generation is enabled.
Example	Typical command: "AMH=3,19" (3 main masses plus 1.9 kg binary mass load) Typical reply: "3, 19"
See Also	3.11.8.2, "MASS=", ""MASS*n*"
Error	ERR #1 Invalid mass load or AMH not active.

AROT(=)	
Purpose	To set or read the automated motorized rotation status (optional on PG7102 and PG7302).
Syntax	"AROT=x" "AROT"
Default	AROT=0
Argument	x: The status to set.
Remarks	PG7000 (optional on PG7102, PG7203 and PG7302) can rotate and brake the piston automatically when appropriate. This function can be enabled by setting the status to '1'. Setting the status to '0' disables the auto rotate function.
Example	Typical command: "AROT=0" Typical reply: "AROT=0"
Error	See 9.3.2 Error Messages ERR #1 The argument was not a '0' or a '1'
See Also	3.9.8, 3.9.13

ATMHEIGHT(=)	
Purpose	To set or read the height of an external barometer relative to the reference level on the PG7000 mounting post (ATM head).
Syntax	"ATMHEIGHT=height" "ATMHEIGHT"
Default	"ATMHEIGHT= 0.00 cm
Argument	height: The position of the barometer relative to the PG7000 mounting post reference level. This value will be negative if the sensor is below the reference level, and positive if the sensor is above the mark.
Remarks	PG7000 uses this height difference to apply a head correction to the atmospheric measurement (ATM head). For the internal sensor, this value is -10 cm. This value can be set from –1 000 to 1 000 cm.
Example	Typical command: "ATMHEIGHT=-20" Typical reply: "-20.00 cm"
Error	See 9.3.2 Error Messages ERR #1 The argument was <-1000 or >1000
See Also	3.9.7 PRINCIPLE, 3.11.3.3

BELL(=)	
Purpose	Read or select the mass loading bell to use.
Syntax	"BELL=x" "BELL"
Default	1
Argument	x: The mass bell number 1, 2, or 3.
Remarks	You may define up to three different loading mass bells to use with PG7000 using the BELLx command. You can then use the "BELL=x" command to select one of the three to use.
Example	Typical command: "BELL=2" Typical reply: "2"
Error	See 9.3.2 Error Messages ERR #1 Invalid or specifies a mass bell that is not defined
See Also	3.11.1 PRINCIPLE, 3.11.1.15

원문: Fluke Calibration PG7302 메뉴얼(영문) · 제조사 원문 자료입니다. 사양은 제조사 사정에 따라 변경될 수 있습니다.

BELLx(=)	
Purpose	Read or set a mass loading bell's information.
Syntax	"BELLx=Sn, Dens, Mass, Report#, CalDate, EditDate" "BELLx"
Default	N/A
Argument	x: The mass bell number 1, 2, or 3 Sn: The mass bell serial number (4 digits max) Dens: The mass bell density Mass: The bell mass (kg) Cert#: The Calibration report number (4 digits max) CalDate: The date that the mass set was last calibrated (YYYYMMDD) EditDate: The date that the mass information was last edited.(YYYYMMDD)
Remarks	You may define up to three different mass bells to use with the PG7000 using the BELLx command. You can then use the "BELL=x" command to select one of the three to use.
Example	Typical command: "BELL1" Typical reply: "BELL1=101,5058.0 kg/m3,0.500010 kg, 1001, 19980415, 9980415"
Error	See 9.3.2 Error Messages ERR #1..7 Invalid or specifies a mass set that is not defined
See Also	3.11.1 PRINCIPLE, 3.11.1.13

CALx(=)	
Purpose	To set or read the calibration adder and multiplier for PG7000 Platform internal measurement sensors.
Syntax	"CALx=adder, mult" "CALx"
Default	CALx=0, 1
Argument	x: "1" for the piston temperature sensor (degrees Celsius). "2" for the ambient temperature sensor (degrees Celsius). "3" for the ambient pressure sensor (Paa). "4" for the vacuum sensor (Paa). "5" for the relative humidity sensor (%RH). adder: The calibration adder. mult: The calibration multiplier.
Remarks	The internal sensors can be calibrated by the user if needed. This is possible by specifying an adder or a multiplier, or both if needed. The ambient sensor measurement is adjusted using the user calibration adder and multiplier: Adjusted Ambient measurement = (measurement x multiplier) + adder This calibration information should be changed with care, as it affects the ambient value. It does not affect the default value or a user defined value.
Example	Typical command: "CAL2=100.0, 1" Typical reply: "100.0 Paa, 1.000000"
Error	See 9.3.2 Error Messages
See Also	5.2.1

© 2011 Fluke Calibration

원문: Fluke Calibration PG7302 메뉴얼(영문) · 제조사 원문 자료입니다. 사양은 제조사 사정에 따라 변경될 수 있습니다.

COMx(=)	
Purpose	To set or retrieve the configuration of the COM ports.
Syntax	"COMx=baud,parity,data,stop" "COMx"
Default	"COM1=2400,E,7,1" "COM2=2400,E,7,1" "COM3=2400,E,7,1"
Argument	x: "1" for COM1 port "2" for COM2 port "3" for COM3 port The arguments must be separated by commas.
Remarks	The available parameters are listed below. Once the port is configured, the configuration is stored in permanent memory and becomes active on power up. When the configuration of the primary port (COM1) is changed, the returned reply is sent at the original COM1 settings but all subsequent replies will be sent at the new configuration settings. COM2 is used for an external barometer and/or external vacuum gage. COM3 is used for control of an external PPC pressure controller. Serial Parameters: Baud rates: 150 300 600 1 200 2 400 4 800 9 600 Parity: O – Odd E - Even N - None Data bits: 7 8 Stop bits: 1 2
Example	Typical command: "COM1=9600,E,7,1" Typical reply: "9600,E,7,1"
Error	See 9.3.2 Error Messages ERR #1 Missing or wrong COM setting
See Also	3.11.5

DATE(=)	
Purpose	To read or set the internal calendar.
Syntax	"DATE=YYYYMMDD" "DATE"
Default	N/A
Argument	The date in the YYYYMMDD format. YYYY: The year from 1980 to 2079. MM: The month 1 to 12. DD: The day of the month 1 to (up to) 31 depending on the month and year.
Remarks	The internal calendar is used to date stamp changes made to the internal sensor calibrations and the piston-cylinder module, mass set and mass loading bell files.
Example	Typical command: "DATE"19991231 Typical reply: "=19991231"
Error	See 9.3.2 Error Messages ERR #1 If invalid date argument
See Also	3.11.4.3

DIFLOAD	
Purpose	Executes the mass load determined by the DIFSETUP command.
Syntax	"DIFLOAD"
Remarks	This command must be preceded by the DIFSETUP command. The DIFSETUP command sets up the PG7601 and determines the proper mass load for offset determination. The DIFLOAD command executes the mass load determined by the DIFSETUP command and places the PG7601 into the offset determination mode. When in this mode, use the DIFOFFSET command to query the PG for the calculated differential offset. The DIFOFFSET command is also used to save the offset as the new differential mode RPM offset value, and to exit the offset determination mode. The ABORT command can also be used to exit the offset determination mode. The reply is the same nominal mass values returned by the DIFSETUP command that is expected to be loaded.
Example	Typical command: ""DIFLOAD" Typical reply: "9.7 kg, 28.05 g"
Error	See the "DIFSETUP" and "DIFOFFSET" commands. ERR #1 Argument is invalid. ERR #23 Vacuum reference not supported by this PG7000. ERR #35 The "DIFSETUP" was not used prior to this command.
See Also	3.9.4.1, DIFLOAD, DIFSETUP

원문: Fluke Calibration PG7302 메뉴얼(영문) · 제조사 원문 자료입니다. 사양은 제조사 사정에 따라 변경될 수 있습니다.

DIFOFFSET (=)	
Purpose	Set or read the differential offset value.
Syntax	"DIFOFFSET=offset, pressure" "DIFOFFSET"
Default	Offset: 0 Pa Pressure: 101325.0 Paa
Argument	Offset: *"NEW"* Saves the current calculation of RPM offset if PG7601 is currently in the offset determination mode, else set the differential offset value in Pa. Pressure: The PG7601 defined pressure when the previously determined differential offset was saved or if *Offset* is "NEW", this argument is ignored and should not be used.
Remarks	The DIFOFFSET commands have two types of operation. If PG7601 is in the offset determination mode, the calculated offset of the external measurement device from the PG7601 defined pressure is returned along with the current PG7601 pressure. If the "NEW" arguments is given with this command, the calculated offset and PG7601 pressure are saved as the new RPM offset and pressure, and PG7601 exits the offset determination mode returning to normal operation, with differential measurement mode enabled. If the PG7601 is not in the offset determination mode, this command just reads back the RPM offset and pressure as determined previously, or can be used set them to another value.
Example	Typical command: "DIFOFFSET=7.1,97.100" Typical reply: "7.10 Pa, 97.10 000 Paa" If PG7601 is in the offset determination mode: Typical command: "DIFOFFSET=NEW" Typical reply: "4.13 Pa, 96.14321 Paa"
Error	See the "DIFSETUP" and "DIFLOAD" commands. ERR #1 The Offset field is invalid or missing. ERR #2 The Pressure field is invalid or missing. ERR #35 Offset was "NEW" but the PG is not in the offset determination mode.
See Also	3.9.4.1, DIFLOAD, DIFSETUP

DIFSETUP	
Purpose	Prepare PG7601 to determine the differential RPM mode offset.
Syntax	"DIFSETUP"
Remarks	The differential mode of operation requires that an RPM offset be determined. This command sets up PG7601 to determine the RPM offset. The PG measurement mode is changed to absolute by vacuum, the mass load resolution is set to 0.01g, and the head correction isdisabled. You MUST have PG7601 setup to use an external pressure measurement device (RPM) connected to COM2 to execute this command. The reply to this command is the external device measurement; the true and the nominal mass load needed to generate the pressure indicated by the external device. After using this command to setup PG7601 for offset determination, you then should use the "DIFLOAD" command to execute the mass load determined by this command. The external device (RPM) measurement, the actual true mass value, the main mass nominal value, and trim mass values that need to be loaded are returned by this command. It is provided in the following comma delimited format: bb.bbbbb Paa, aa.aaaaaa Kg, mm.m Kg, t.ttt g bb.bbbbb Paa: The barometer measurement. aa.aaaaaa kg: The actual total true mass value. mm.m kg: The total of the main mass's nominal values. t.tttg: The trim mass loaded.
Example	Typical command: ""DIFSETUP" Typical reply: "97.23238 Paa, 9.728002 kg, 9.7 ,g, 28.05 g"
Error	See the "DIFLOAD" and "DIFOFFSET" commands ERR #1 The barometer measurement resulted in an invalid mass load ERR #23 Vacuum reference not supported by this PG7000 ERR #28 An external measurement device has not been SETUP
See Also	3.9.4.1, DIFLOAD, DIFOSSET(=)

© 2011 Fluke Calibration

원문: Fluke Calibration PG7302 메뉴얼(영문) · 제조사 원문 자료입니다. 사양은 제조사 사정에 따라 변경될 수 있습니다.

DUTHEIGHT(=)	
Purpose	To set or read the height of an external Device Under Test (DUT) relative to the reference level on the PG7000 mounting post (DUT head).
Syntax	"DUTHEIGHT=height" "DUTHEIGHT"
Default	"ATMHEIGHT=0.00cm"
Argument	height: The position of the device under test relative to the PG7000 mounting post reference mark. This value will be negative if the DUT is below the reference level, and positive if the DUT is above the reference level.
Remarks	PG7000 uses this height difference to apply a head correction to the pressure calculation. This value can be set from –1 000 to 1 000 cm.
Example	Typical command: "DUTHEIGHT=20" Typical reply: "20.00cm"
Error	See 9.3.2 Error Messages ERR #1 The argument was <-1000 or >1000
See Also	3.9.7, 3.11.3

ERR	
Purpose	To read the error messages of the last command.
Syntax	"ERR"
Default	ERR#=OK
Argument	N/A
Remarks	If the last response returned from PG7000 was an error (ERR#xx), then the error message that corresponds to that error can be read. If an error is received and a valid command is sent to PG7000 before the "ERR" command has been sent, the error pointer is reset and an "ERR# 0 = OK" will be returned with the next "ERR" command. The *CLS command clears any pending error messages. See Error Message Summary List Section 4.3.3.
Example	Typical command: "ERR" Typical reply: "ERR# 0 = OK"
Error	None
See Also	4.3.3, AMHERR

HLDFALL	
Purpose	Get the results of the last natural fall rate measurement step while executing the line pressure sequence in high line differential mode.
Syntax	"HLDFALL"
Remarks	This command should only be used after the natural fall rate measurement function of setting a line pressure has completed (see Section 4.5). The reply contains: Reference piston average fall rate (mm/min) Tare piston average fall rate (mm/min) Natural fall rate difference (Ref-Tare) or "ERR" If the reference or tare piston position was outside of ± 2.9 mm during this step, an ERR message will be contained in the third data field of the reply.
Example	Typical command: "HLDFALL" Typical reply: "-1.1, -1.3, 0.2" (step completed without error)
Error	ERR #40 Did not just complete crossfloat step of LineP sequence ERR #41 Piston position exceeded ± 2.9 mm
See Also	3.9.4.2, 3.11.5, 4.5, MODE, ABORT, HLDVIEW, HLDPPOS, HLDFALL, HLDXFLT

원문: Fluke Calibration PG7302 메뉴얼(영문) · 제조사 원문 자료입니다. 사양은 제조사 사정에 따라 변경될 수 있습니다.

HLDLINEP		
Purpose	Execute the functions needed to set a new line pressure in high line differential mode.	
Syntax	"HLDLINEP" "HLDLINEP=*LineP*" "HLDLINEP=NEXT" "HLDLINEP=REPEAT"	
Remarks	This command controls the new line pressure set sequence. It starts the sequence, increments through the sequence steps and completes the sequence (see Section 4.5). Use the "ABORT" command to abort the sequence at any time.	
Argument	LineP:	The new line pressure to set. This is the initial step to setting a new line pressure for high line differential mode. PG7102 will check the request to ensure that the mass set and piston combination can cover the pressure requested. PG7102 will also configure itself and the tare PG7000 to set a new line pressure. A tare PG7000 must be connected to the reference PG7102's COM2 port and communications setting of the tare PG7000's COM1 port must match the reference PG7102's COM2 port. After this command is successfully executed, you can use the "MR" command to get the mass value needed to set the line pressure.
	NEXT:	Executes the next step when setting the line pressure. Refer to Section 4.5 for examples of the use of this argument. This argument is only valid if a new line pressure has previously been requested by using the "*LineP*" argument, but the line pressure sequence has not been completed yet.
	REPEAT:	Repeats the previous step when setting a new line pressure. This argument is only valid at specific points in the line pressure set sequence. Refer to Section 4.5 for examples of the use of this argument.
Example	Typical command: Typical reply: Typical command: Typical reply: Typical command: Typical reply: Typical command: Typical reply: Typical reply: Typical reply:	""HLDLINEP=2000" (Start new line pressure set sequence) "2000.00 kPa" ""HLDLINEP=NEXT" (Start the next step) BUSY1" or "BUSY2" (The next step has started) ""HLDLINEP=REPEAT" (Repeat the last step) "OK" ""HLDLINEP" "BUSY1" (Natural fall rate function is running) "BUSY2" (Crossfloat function is running) "OK" (Function is complete)
Error	ERR #1 ERR #1 ERR #13 ERR #28 ERR #37 ERR #38 ERR #39 ERR #40	Line pressure is invalid for active piston and mass set Text argument not as expected Tare PG7000 has not been detected Tare PG7000 communications timeout Tare PG7000 incorrect type or software version Tare and reference pistons do not match Tare PG7000's reply not as expected "NEXT" argument given but current step not complete or failed
See Also	3.9.4.2, 4.5, MODE, ABORT, MR, HLDVIEW, HLDPPOS, HLDFALL, HLDXFLT	

HLDPPOS		
Purpose	Get the piston positions of the reference and tare PG7000s in high line differential mode. Also returns the real time or average crossfloat fall rate difference when available.	
Syntax	"HLDPPOS"	
Remarks	This command can be used while generating the line pressure or during normal high line pressure operation. The third field (crossfloat fall rate difference) is only available during the crossfloating step of line pressure setting. It is an average value during the crossfloat fall rate measurement function and a real time value in all other conditions.	
Example	Typical command: Typical reply:	"HLDPPOS" "0.7, 0.6, 9 8"
Notes	See the "HLDLINEP" command	
See Also	3.9.4.2, 3.11.5, 4.5, MODE, ABORT, HLDVIEW, HLDPPOS, HLDFALL, HLDXFLT	

© 2011 Fluke Calibration

원문: Fluke Calibration PG7302 메뉴얼(영문) · 제조사 원문 자료입니다. 사양은 제조사 사정에 따라 변경될 수 있습니다.

HLDVIEW	
Purpose	Get the results from the previous line pressure set in high line differential mode.
Syntax	"HLDVIEW"
Remarks	Returns the results of the previous line pressure set sequence (local or remote). This data is replied in the following comma delimited format: pppp.pp uuuu, rr.r, tt.t, RR.R, TT.T, delta Pppp.pp The nominal line pressure uuuu The line pressure units rr.r The reference piston-cylinder temperature recorded at the time of crossfloat in º C tt.t The tare piston-cylinder temperature recorded at the time of crossfloat º C RR.R The reference piston natural fall rate (mm/s) TT.T The tare piston natural fall rate (mm/s) Delta The natural fall rate difference
Example	Typical command: ""HLDVIEW" Typical reply: "2000.0 kPa, 23.4, 23.2, -0.3, -0.4, 0.21"
See Also	3.9.4.2, 3.11.5, 4.5, MODE, ABORT, HLDVIEW, HLDPPOS, HLDFALL, HLDXFLT

HLDXFLT	
Purpose	Get the results of the last crossfloat fall rate measurement step while executing the line pressure sequence in high line differential mode.
Syntax	"HLDXFLT"
Remarks	This command should only be used after the crossfloat fall rate measurement function of setting a line pressure has completed (see Section 4.5). The reply contains: Final average crossfloat fall rate difference (Δmm/min) or "ERR" Suggested trim mass (g) adjustment on the tare PG7000 or "ERR" If the reference or tare piston position was outside of ± 2.9 mm during this step, an ERR message is contained in both data fields.
Example	Typical command: "HLDXFLT" Typical reply: "0.1, 0.001g" (step completed without error) Typical reply: "ERR, ERR" (piston position exceeded ± 2.9 mm)
Error	ERR #40 Did not just complete crossfloat step of LineP sequence ERR #41 Piston position exceeded ± 2.9 mm
See Also	3.9.4.2, 3.11.5, 4.5, MODE, ABORT, HLDVIEW, HLDPPOS, HLDFALL, HLDXFLT

LOCALG(=)	
Purpose	Set or read the PG7000 local gravity.
Syntax	"LOCALG=x" "LOCALG"
Default	"LOCALG=9.80665"
Argument	X: The current local gravity.
Remarks	The local gravity is used in the mass to pressure calculation. The Setup determines if the local gravity, the default gravity or a user defined gravity will be used for this calculation.
Example	Typical command: "LOCALG=9.805" Typical reply: "9.80500"
Error	See 9.3.2 Error Messages ERR #1 If x is <8 or >11
See Also	3.11.6, 2.4.3, 3.10

LOCAL	
Purpose	Place the device in the LOCAL mode.
Syntax	"LOCAL"
Default	N/A
Argument	N/A
Remarks	In LOCAL mode all front panel operations are available. The LOCAL command deactivates REMOTE mode.
Example	Typical command: ""LOCAL" Typical reply: "LOCAL"
Error	None

원문: Fluke Calibration PG7302 메뉴얼(영문) · 제조사 원문 자료입니다. 사양은 제조사 사정에 따라 변경될 수 있습니다.

MASS(=)		
Purpose	Read or set the current mass set.	
Syntax	"MASS=n" "MASS"	
Default	N/A	
Argument	N:	The mass set number 1, 2, or 3.
Remarks	You may define up to three different mass sets to use with PG7000 using the MASSx and MASSSETx commands. The MASS(=) command is then used to select the current active mass set. A mass set must be defined before selecting it. If an AMH mass set is specified, the AMH automated mass handler is initialized.	
Example	Typical command: Typical reply:	""MASS" "MASS=1"
Error	See 9.3.2 Error Messages ERR #1 ERR #13	 n invalid or specifies a mass set that is not defined AMH mass set was specified but an AMH automated mass handler was not detected.
See Also	3.11.1.10, 3.11.1 PRINCIPLE	

MASSx(=)		
Purpose	Read or set a mass set's general information.	
Syntax	"Massx=Sn,Dens,extra1,extra2,extra3,Cert#,CalDate,EditDate, AMH" "Massx"	
Default	N/A	
Argument	x: Sn: Dens: extra1/2/3: Cert#: CalDate: EditDate: AMH:	The mass set number 1, 2, or 3. The mass set serial number (4 digits max). The main mass density. These are placeholders for data fields that are obsolete and are always '0'. The calibration report number (4 digits max). The date that the mass set was last calibrated (YYYYMMDD). The date that the mass information was last edited (YYYYMMDD). '0' for a manual mass set '1' for an AMH mass set.
Remarks	You may define up to three different mass sets to use with PG7000 using the MASSx and MASSSETx command. The MASSSETx command must be used first. The MASSx command is then used to edit the mass set general information. If the "AMH" flag is set, the mass set defined must correspond exactly to the AMH's mass set.	
Example	Typical command: Typical reply:	"MASS1" "MASS1=101,8000.0 kg/m3,0,0,0,1002,19980415,19980415, 0"
Error	See 9.3.2 Error Messages ERR #1..9	 Invalid arguments
See Also	3.11.1.6, 3.11.1 PRINCIPLE, 3.6, MASSSETx	

© 2011 Fluke Calibration

원문: Fluke Calibration PG7302 메뉴얼(영문) · 제조사 원문 자료입니다. 사양은 제조사 사정에 따라 변경될 수 있습니다.

MASSSETx(=)	
Purpose	Read and define the masses included in mass sets.
Syntax	"MASSSETX" "MASSSET=nominal,true (, AMHtype)" "MASSSET"
Default	N/A
Argument	x: The mass set number 1, 2, or 3. 0 To "close" a mass set. nominal: The nominal mass value. true: The true mass value. AMHtype: Optional AMH mass type specifier. '1' indicates that this mass is an AMH 'main' mass '0' indicates that this mass is an AMH 'binary' mass
Return	nominal mass, true mass, mass ID, AMH Type nominal: The nominal mass value (kg) true: The true mass value (kg) ID: The mass sequential ID (1..10) AMHtype: The AMH mass type. Only valid if the mass set is defined as an AMH mass set (see the "MASSx command).
Remarks	The PG7000 supports setu up of up to three mass sets. A valid mass includes a nominal and a true mass value. The MASSSETx command accesses masses sequentially starting from the first defined mass. As a result, it is not possible to view or edit a specific mass in the mass set with a single command. All masses in the mass set must be edited or viewed in order to view or modify a single mass in the mass set. To read the mass set contents, send the "MASSSETx" command substituting 1,2 or 3 for "x" to specify a specific mass set. This "opens" the mass set for reading and returns the data for the first mass in the set. For a non AMH mass set, the first mass returned is always the makeup mass. Then send the "MASSSET" command without a mass set number repeatedly to retrieve the additional masses in the set one at a time. Masses are returned in their mass sequence order. When the end of the mass set is reached, "ERR #30" is returned. Always send "MASSSET0" to close a mass set that was opened using the MASSSETx command. Use the MASSx command to create a new mass set prior to using the MASSSETx command to add masses to the set. To define the mass set contents, send the "MASSSETx=nominal, true,[AMHType]" command to specify the mass set (1, 2, or 3) and to set the nominal and true mass values for the first mass in the set. This erases the current mass set and "opens" the mass set for writing. Then send "MASSSET=nominal,true," one at a time for each mass in the mass set. The commands must be sent in the mass loading order. With a manual mass set, the first mass in the set is always the special case "make up" mass that is always loaded first, when the requested mass exceeds it's mass value. For an AMH mass set, always define the main mass set group first. In this case the first mass sent with the MASSSETx command will be the first main mass of the AMH mass set. Make sure to use "1" as the third argument for AMH mass set main masses.ie. "MASSSET1=6.2,6.2004746,1" The mass ID returned by the MASSSETx command is auto determined by the PG7000 based on the order of mass entry. The ID orders masses that have the same nominal mass. If there are five (5) 10 kg masses, then they are identified as #1 through #5, and are loaded in this order when defining a pressure.
Example (non AMH set)	Typical command: ""MASSSET1" Typical reply: "4.50, 4.5000012, 1, 0" Typical command: ""MASSSET" Typical reply: "5.00, 5.0000008, 1, 0" Typical command: ""MASSSET" Typical reply: "5.00, 5.0000014, 2, 0" Typical command: ""MASSSET" Typical reply: "5.00, 5.0000011, 3, 0" Typical command: ""MASSSET" Typical reply: "5.00, 5.0000004, 4, 0" Typical command: ""MASSSET0" Typical reply: "MASSSET0"
Example (AMH Mass Set)	Typical command: ""MASSSET1=6.2,6.201446,1" Typical reply: "6.2,6.201446,1,1" Typical command: ""MASSSET=6.2,6.200029,1" Typical reply: "6.2, 6.200029,2,1" Typical command: "MASSSET=0.1,0.100086,0" Typical reply: "0.1, 0.100086,1,0" Typical command: "MASSSET=0.2,0.200062,0" Typical reply: "0.2, 0.200062,1,0" Typical command: ""MASSSET0" Typical reply: "MASSSET0"

원문: Fluke Calibration PG7302 메뉴얼(영문) · 제조사 원문 자료입니다. 사양은 제조사 사정에 따라 변경될 수 있습니다.

Error	See 9.3.2 Error Messages ERR #1 x mass set # is invalid ERR #2 The nominal mass value given is invalid ERR #3 The true mass value not within 10% of the nominal mass ERR #29 The mass set has not been “opened” yet ERR #30 You are at the end of the mass set
See Also	3.11.1.6, 3.6, 2.3.1.3, MASS, MASSx
Error	ERR #1 Invalid mass load or AMH not active.

MEDIA(=)	
Purpose	Read or set the PG7000 pressurized medium type for DUT head corrections.
Syntax	“MEDIA=mediaType” “MEDIA”
Default	“MEDIA=N2
Argument	mediaType: “N2”, “He”, “Air”, “Oil”, “H2O” or user set density value.
Remarks	You must select one of five (5) available media for use with the PG, of specified a user defined density. This allows PG7000 to utilize the correct internal calculations for head corrections.
Example	Typical command: “MEDIA=Air” Typical reply: “Air”
Error	See 9.3.2 Error Messages ERR #1 Media type is invalid
See Also	3.9.7 PRINCIPLE, 3.11.3.1

MEM	
Purpose	Read the status of the internal data RAM since the last power up.
Syntax	“MEM”
Default	N/A
Argument	N/A
Remarks	On power up a memory test is run to check the integrity of the internal data RAM. If the memory has been corrupted then “FATAL MEMORY LOSS” will be displayed to alert the user. The status memory can be read from a remote computer. Typical causes of memory fault: Upgrade of PG7000 software Connection of a cable to PG7000 when PG7000 is on Failure of internal memory Return string: “MEM=1” System is OK “MEM=0” System memory has been corrupted and the default operating parameters were loaded into memory
Example	Typical command: “”MEM” Typical reply: “MEM=1”
Error	None

MMODE	
Purpose	Get or set the PG measurement mode and reference.
Syntax	“MMODE” “MMODE=*mode*”
Argument	Mode: "AATM" Absolute mode with atmospheric reference "AVAC Absolute mode with vacuum reference "G" Gauge mode with atmospheric reference "D" Differential mode (PG7601) or high line differential mode (PG7102)
Remarks	This command sets both the unit mode and the measurement reference. This can also be accomplished using the UNIT and the VAC commands. Differential mode is a special case depending on the PG7000 model, and requires special conditions to run.
Example	Typical command: “MMODE” Typical reply: “AATM”
Error	ERR #1 Invalid mode specified ERR #32 Altitude or airspeed unit not allowed with atmospheric reference.
See Also	3.9.4, 3.9.3, UNIT, VAC

© 2011 Fluke Calibration

원문: Fluke Calibration PG7302 메뉴얼(영문) · 제조사 원문 자료입니다. 사양은 제조사 사정에 따라 변경될 수 있습니다.

we measure, we calibrate, we validate.
㈜테솔 · www.tessol.com TS-TL-FLK-093 155 / 214
KOLAS 국제공인교정기관 · ISO/IEC 17025

TS-TL-FLK-093

MRES(=)	
Purpose	Read or set the PG7000 mass loading resolution.
Syntax	"MRES=massResolution" "MRES"
Default	"MRES=0.01g
Argument	MassResolution: The mass loading resolution in grams.
Remarks	You must set the resolution that PG7000 uses to convert user provided pressure requests into mass loads. PG7000 will calculate the required mass load to the precision defined by the mass loading resolution. The maximum resolution is 0.001 gram, and the minimum is 100 g. The mass resolution is automatically set to 100 g whenever an AMH mass set is made active or AMH is initialized.
Example	Typical command: ""MRES=.01" Typical reply: "MRES=0.010g"
Error	See 9.3.2 Error Messages ERR #1 The resolution given is greater that 100g of less than 0.001 g
See Also	3.9.10

MROT(=)	
Purpose	Read or set the manual motorized piston rotation status.
Syntax	"MROT=rotationStatus" "MROT"
Default	"MROT=0"
Argument	Rotation Status: " 1" Accelerates the piston rotation. "-1" Decelerates (brakes) the piston rotation. " 0" Aborts current acceleration or deceleration
Remarks	You may manually control the rotation of the PG7000 piston (with bell installed) instead of using the auto rotate function (see the "AROT" command). The PG7000 will only rotate the piston if the bell is installed and the piston position is not close or against the top or bottom of the piston travel. You should not typically use this command when the auto-rotate feature is enabled.
Example	Typical command: "MROT=1" Typical reply: "MROT=1"
Error	See 9.3.2 Error Messages ERR #1 The argument given is not "-1", "0" or a "1"
See Also	3.9.13, 3.9.8, AROT

MR	
Purpose	Read the current mass load variables.
Syntax	"MR"
Default	N/A
Argument	N/A
Remarks	The actual true mass value, main mass nominal value, and trim mass values of the mass currently loaded are retrieved with this command. The data is provided in the following comma delimited format: aa.aaaaaa kg, mm.m kg, t.ttt g aa.aaaaaa kg: The actual total true mass value. mm.m kg: The total of the main masses nominal values (mass ≥ 0.1 kg). t.tttg: The trim mass loaded. These values are the result of a user provided pressure request or mass request. Since the actual total true mass value is a result of the true mass values, it's resolution is not controlled by the "MRES" command.
Example	Typical command: ""MR" Typical reply: "20.687002 kg, 20.6 Kg, 77.000 g"
Error	None
See Also	3.6

원문: Fluke Calibration PG7302 메뉴얼(영문) · 제조사 원문 자료입니다. 사양은 제조사 사정에 따라 변경될 수 있습니다.

MS=	
Purpose	To set the nominal main (mass ≥ 0.1 kg) and trim mass to be loaded on PG7000. The actual mass value used is determined by the true mass values of the selected mass set.
Syntax	"MS=mm.m Kg, t.ttt g"
Default	N/A
Argument	mm.m kg: The total of the main masses nominal values to be loaded. t.ttt g: The trim mass to be loaded.
Remarks	The user may specify a target for PG7000 in mass or pressure. When a mass target is given, the selected mass set is used to determine the masses available for loading. PG7000 starts at the largest value smallest numbered main mass until enough mass has been found to satisfy the main mass request. The trim mass is then added to the total of the required true mass values. Then a series of actions may occur: 1. If auto rotate feature is enabled, the masses are decelerated to a stop. 2. If the auto generation piston raise feature is enabled, the piston is be lifted. 3. If an AMH mass handler is active, the appropriate mass is loaded. 4. If the auto generation is enabled, the external PPC attempts to float the piston. 5. If the automatic rotation is enabled, the masses are rotated when floating. 6. The PG7000 achieves a *Ready* condition at the requested mass load. This command replies before execution of the steps actually starts. The "PR" command can be used to monitor the status of these events and determine when the PG7000 measurement is *Ready*. The "ABORT" command or changing to local front panel operation using the **[ESC]** key, the LOCAL command or a GPIB go to local function stops the operation.
Example	Typical command: ""MS=5, 50" Typical reply: "5.0 kg, 50.000 g"
Error	See 9.3.2 Error Messages ERR #1 If the first argument is invalid ERR #2 If the second argument is invalid
See Also	3.9.12, 3.6, 3.9.11, 3.9.11.1, PR , PS=, ABORT, AROT, PGEN

OHMS	
Purpose	Read the mounting post and the ambient PRT resistances.
Syntax	"OHMS"
Default	N/A
Argument	N/A
Remarks	The mounting post and ambient temperature are measured and used for internal calculations. This command always returns the last measured value using the internal PRTs. If the current Setup does not specify "INTERNAL" as the measurement source, this measurement is not made, and the value returned is a measurement made when the unit was powered up.
Example	Typical command: "OHMS" Typical reply: "109.519 ohms, 110.995 ohms" The two measurements are comma delimited. The first field is the mounting post PRT resistance. The second field is the ambient PRT resistance.
Error	None
See Also	5.2.1.5

© 2011 Fluke Calibration

원문: Fluke Calibration PG7302 메뉴얼(영문) · 제조사 원문 자료입니다. 사양은 제조사 사정에 따라 변경될 수 있습니다.

PCTx(=)	
Purpose	Set or read the source for the mounting post temperature measurement. Also optionally sets the USER defined measurement.
Syntax	"PCTx=source, meas" "PCTx=source" "PCTx"
Default	20 °C if the source is DEFAULT
Argument	x: The setup number from 1 to 21. See the SETUP command. Setup is reserved for remote command use only. Source: The measurement source. This can be INTERNAL, DEFAULT, or USER. Meas: The current measurement used. This can only be set if the source argument is USER. If specified, the limit for this argument is 0 to 40 °C
Remarks	PG7000 has an internal mounting post PRT sensor whose measurements can be used as the value of piston-cylinder temperature in calculations. You may also request that another source be used for this measurement. The measurement source can be the internal sensor, a user defined fixed value, or the manufacturer's fixed default value. The Setup number allows 19 separate configurations for each sensor. The SETUP command selects which of the 20 to use. Setup number 1 is restricted as INTERNAL only to serve as manufacturer's fixed Setup, and cannot be changed. The meas argument is used to allow the user to define a fixed value if the source is set to USER. The reply will always include the source and the meas fields.
Example	Typical command: "PRT2=USER,25" Typical reply: "USER,25dC" Typical command: "PRT9=INTERNAL" Typical reply: "INTERNAL, 21.34 dC"
Error	See 9.3.2 Error Messages ERR #1 The setup number x is invalid ERR #2 The source argument is invalid ERR #3 The meas argument is invalid
See Also	3.10, 1.2.1.2, SETUP

PGEN(=)	
Purpose	Set or read the piston float target for automatic piston floating (using an external pressure generation/control component). Also can turn the automated pressure generation function OFF and ON.
Syntax	"PGEN=m.m" "PGEN"
Default	PGEN=0.0 (off)
Argument	N/A
Remarks	An external pressure generation/control component can be used to automatically float the PG7000 piston. This command specifies the piston position to which the automated pressure generation function sets the piston when floating or refloating it. The auto generation stops pressure control once the piston passes the piston float target and then does not control again until the piston falls outside of the piston position "Ready" limits (see PISTONRDY cmd). Setting PGEN to 0 turns OFF automated pressure generation in the same manner as turning it OFF locally from the PG Terminal. The pressure generation/control component should be "configured" (see pressure generation/control component Operation and Maintenance Manual) and the "PGEN" command should be issued whenever the Device Under Test is changed or the piston is changed.
Example	Typical command: "PGEN=1.5" Typical reply: "PGEN=1.5mm"
Error	See 9.3.2 Error Messages ERR #1 The argument is invalid
See Also	3.9.9, PPC, READYx

원문: Fluke Calibration PG7302 메뉴얼(영문) · 제조사 원문 자료입니다. 사양은 제조사 사정에 따라 변경될 수 있습니다.

PISTONRDYx(=)		
Purpose	Read or set a piston-cylinder module's rotation rate limits.	
Syntax	"PISTONRDYx=MinRPM, MaxRPM "PISTONRDYx"	
Default	N/A	
Argument	MinRPM: MaxRPM:	The minimum allowed rotation speed at which the measurement becomes *Ready* [rpm]. If autorotate is enabled, this is also the point at which the rotation system will engage. This does not apply if the bell is not loaded. The target maximum rotation rate when automated rotation engages to rotate the piston. This does not apply if the bell is not loaded.
Remarks	There are a number of conditions to allow the PG7000 measurement to become *Ready*. These two piston-cylinder module dependent limits determine when the rotation rate is in the correct limits.	
Example	Typical command: Typical reply:	"PISTONRDY1" "10, 50"
Error	See 9.3.2 Error Messages ERR #1..2	x invalid first or second argument
See Also	3.4, 3.4.2, 3.11.1.1, READYx	

PISTONVARx(=)		
Purpose	Read or set a piston-cylinder module's characteristics.	
Syntax	"PISTONVARx=Sn,PCalpha,CylAlpha,DefCoef,Tension,Offset, k (P)" "PISTONVARx"	
Default	N/A	
Argument	x: Sn: Pcalpha: CylAlpha: DefCoef: Tension: Offset: k(P):	The piston-cylinder number 1, 2, or 3 The piston-cylinder serial number (4 digits max) The piston temperature coefficient The cylinder temperature coefficient The piston-cylinder Ae pressure coefficient The surface tension The reference level offset from the mounting post reference mark The mass to fall rate coefficient for tare piston-cylinders used in high line differential mode.
Remarks	You may define up to seventeen different piston-cylinder sets to use with PG7000 using the PISTONx, and the PISTONVARx command is then used to edit the piston-cylinder set physical information.	
Example	Typical command: Typical reply:	"PISTONVAR1" 225, 5.5000 10-6/dC, 4.5000 10-6/dC, 5.3800 10-6/MPa, 0.0000000N/m, 32.4600mm
Error	See 9.3.2 Error Messages ERR #1..7	x invalid first through seventh argument
See Also	3.11.1.1	

PISTONx(=)		
Purpose	Read or set a piston-cylinder module's general information.	
Syntax	"PISTONx=Sn,Area,Mass,Density,CalCert#,CertDate; EditDate" "PISTONx"	
Default	n/a	
Argument	x: Sn: Area: Mass: Density: CalCert#: CertDate: EditDate:	The piston-cylinder module number 1 through 17 The piston-cylinder module serial number The piston-cylinder module effective area (mm2) The piston assembly mass (kg) The piston assembly apparent density (kg/m3) The calibration report number (dd/mm/yy) The calibration report date (dd/mm/yy) The date that this data was last edited
Remarks	You may define up to seventeen different piston-cylinder sets to use with the PG7000 using the PISTONx, and PISTONVARx commands. The PISTONx command is used to edit the piston-cylinder set general information.	
Example	Typical command: Typical reply:	"PISTON1" "225, 196.110000 mm2, 0.200000kg, 4233.0Kg/m3, 100, 19990115, 19990120
Error	See 9.3.2 Error Messages ERR #1..7	x invalid first through seventh argument
See Also	3.11.1, 3.11.1.1, PISTONVARX (=)	

© 2011 Fluke Calibration

원문: Fluke Calibration PG7302 메뉴얼(영문) · 제조사 원문 자료입니다. 사양은 제조사 사정에 따라 변경될 수 있습니다.

PISTON(=)	
Purpose	Read or set the current piston-cylinder module.
Syntax	"PISTON=n" "PISTON"
Default	N/A
Argument	n: The piston-cylinder module number 1 through 17.
Remarks	You may define up to seventeen different piston-cylinder modules to use with PG7000 using the PISTONx and PISTONVARx commands. The PISTON(=) commands are then used to select the currently active piston-cylinder module. A piston-cylinder module must be defined before selecting it.
Example	Typical command: "PISTON" Typical reply: "PISTON=1"
Error	See 9.3.2 Error Messages ERR #1 n invalid or specifies a piston-cylinder set that is not defined
See Also	3.9.2, 3.11.1.5

PPC(=)	
Purpose	Send a command to an external pressure generation/control component connected to COM3 of the PG7000.
Syntax	"PPC=xxx"
Default	N/A
Argument	N/A
Remarks	This command allows communications to an external pressure generation/control component through COM3 of PG7000. COM3 must be previously set up to the correct settings to match the pressure generation/control component R2323 interface. The PG7000 auto pressure generation should be disabled before using the PPC(=) command (see the "PGEN" command) to prevent interference with the PPC's auto generation functions. Any reply from the component will be returned until another command is sent to the PG7000.
Example	Typical command: "PPC=PR" Typical reply: "R 561.0 psi a"
See Also	3.9.9, PGEN

PPCPR	
Purpose	Read the most recent pressure measurement from an external PPC pressure controller.
Syntax	"PPCPR"
Remarks	The PG7000's automated pressure generation and control function does not have to be active to use the PPCPR command. The external PPC's COM1 port must be connected into the PG7000's COM3 port, and the PPC's COM1 settings and the PG7000's COM3 settings must match. If the PG7000 has a previous PPC measurement that is less than 5 seconds old, it will be replied. Otherwise, a current measurement will be obtained from the PPC for the reply. The reply is in the active pressure unit of measure.
Example	Typical command: "PPCPR Typical reply: "10.030210"
Error	ERR #13 PPC did not respond.
See Also	3.9.9, COM3, PPC=
PPOS	
Purpose	Read the current piston position rate of vertical movement.
Syntax	"PPOS"
Default	N/A
Argument	N/A
Remarks	The PG7000 piston position has a total travel of 9 mm. This piston position is represented from -4.5 mm (all the way down, LSTOP) to 4.5 mm (all the way up, HSTOP). This measurement is updated every 2 seconds, along with the piston drop rate which is updated when the system is stable. These two fields are comma delimited.
Example	Typical command: "PPOS" Typical reply: "-3.44 mm, 0.5 mm/min"
Error	None
See Also	3.5, 3.9.5, 3.9.5.1

원문: Fluke Calibration PG7302 메뉴얼(영문) · 제조사 원문 자료입니다. 사양은 제조사 사정에 따라 변경될 수 있습니다.

PRTPC	
Purpose	Set or read the mounting post PRT temperature sensor calibration data.
Syntax	"PRTPC=Sn, slope, zero, report number, cal date" "PRTPC"
Default	1, 0.3896, 100.00, 1, 19880101
Argument	Sn: The serial number from 0 to 9999 slope: The PRT slope (Ohms/0 °C) zero: The PRT resistance at 0 °C cert number: The calibration report number cal date The calibration date (yyyymmdd)
Remarks	The mounting post PRT data can be read or set using this command. Care must be taken to ensure that you do not accidentally overwrite this date.
Example	Typical command: "PRTPC" Typical reply: "103, 0.3896 ohms/dC, 99.999500 ohms, 1001, 19990115
Error	See 9.3.2 Error Messages ERR #1..5 If the arguments are missing or invalid ERR #7 The date is invalid
See Also	5.2.1, 5.2.1.5

PR	
Purpose	Read the current calculated pressure value and *Ready/Not Ready* status.
Syntax	"PR"
Default	N/A
Argument	N/A
Remarks	The current pressure resulting from the mass loaded is calculated every 2 seconds. It is displayed in the current pressure units. The data string also contains ready information. The string is in the format "ssx ddddddd uuuum". "ss": The first two characters indicate the ready status. This is determined by the piston position, rotation speed, AMH automated mass handler status, and the pressure generation status: "R " for *Ready*, "NR" for *Not Ready*. "x": This 3rd character indicates any ongoing activity by the PG7000 to reach a *Ready* condition. Any character except a " " (whitespace) will keep the PG ready status *Not Ready* ("NR"): " " no activity. "A" the auto rotate feature is accelerating mass rotation. "D" the auto rotate feature is decelerating mass rotation before a mass load occurs. "R" the piston is being raised by a pressure controller before a mass load occurs. "L" AMH automated mass handler is busy loading the required mass load. "W" AMH has completed a mass load and is waiting for a "RESUME" command to continue operations. "E" an AMH error has occurred. You can use the "AMHERR" command to get further AMH error information. "V" the PG is in absolute by vacuum mode and waiting to reach the required vacuum limit before continuing. Current residual pressure exceeds the vacuum limit. "ddddddd": This 8 digit numeric field indicates the current calculated pressure in the current pressure units. It has 3 leading spaces before it. "uuuu": This 4 character field indicates the current pressure unit.(see "UNIT") "m": This character indicates the measurement mode. (see "MMODE").
Example	Typical command: "PR" Typical reply: "NR 7.003647 kPa g" (not ready) "R 7.003647 kPa g" (ready) "NRL 7.003647 kPa g" (not ready, busy loading mass)
Error	None
See Also	3.4, 3.9.8, 3.9.9, 3.9.11, MS=, PS=, RESUME, AMHERR

© 2011 Fluke Calibration

원문: Fluke Calibration PG7302 메뉴얼(영문) · 제조사 원문 자료입니다. 사양은 제조사 사정에 따라 변경될 수 있습니다.

PS=	
Purpose	To set a new PG7000 target pressure.
Syntax	"PS=targ"
Default	N/A
Argument	N/A
Remarks	The pressure command is interpreted in the current pressure unit of measure. If a pressure is requested that is not in the range of operation, the pressure request isl not implemented and an error message is returned. The mass load needed to set the pressure is calculated using the current mass loading resolution and the measured pressure resulting from this mass is calculated. . Then a series of actions can occur: 1. If the auto rotate feature is enabled, the masses are decelerated to a stop. 2. If the auto generation piston raise feature is enabled, the piston is lifted. 3. If an AMH automated mass handler is active, the appropriate mass is loaded. 4. If an AMH is active and the mass resolution is set to less than 100g, the PG7000 waits for the "RESUME" command to be sent before proceeding. This gives the host program the opportunity to instruct the operator to load trim mass before pressure generation and piston rotation proceed. 5. If auto generation is enabled, the external PPC attempts to float the piston. 6. If the automatic rotation is enabled, the masses are rotated when floating. This command replies before these actions actually start. The "PR" command can be used to monitor the status of these events and determine when the PG7000 measurement is actually *Ready*. The "ABORT" command or changing to local front panel operation using the **[ESCAPE]** key, the LOCAL command or a GPIB go to local function will stop the operation.
Example	Typical command: "PS=100" Typical reply: "100.0000 kPa g"
Error	See 9.3.2 Error Messages ERR #1 If target results in an invalid mass load
See Also	3.9.12, 3.9.10, 3.9.11, 3.9.3, MS=, PR, UNIT=, RESUME

READYx(=)	
Purpose	Set or read the ready criteria for a specific "Setup"
Syntax	"READYx=USER, RdyBand, RdyVac" "READYx=DEFAULT" (specifies to use fixed defaults) "READYx"
Default	"READYx=USER, 2.5mm, 5Paa"
Argument	x: The setup number whose ready criteria are to be accessed (1 to 20) RdyBand: Piston position "ready band" (±mm) VacLim: The vacuum ready limit (Paa)
Remarks	The PG7000 uses the piston position and the vacuum measurement (PG7601 in absolute by vacuum mode only) to determine if the *Ready/Not Ready* condition. Other factors can also keep the PG7000 measurement from being *Ready* (such as an active external pressure controller, active rotation system, active AMH automated mass handler). The piston position must be within the ready band ("RdyBand") to allow a ready condition. In absolute by vacuum measurement mode, the vacuum measurement must also be below the Vacuum Limit ("VacLim"). Each "Setup" defined for the PG7000 can have a different set of *Ready/Not Ready* criteria. If the "DEFAULT" conditions are specified, then these values are fixed and cannot be changed. The piston position ready limits define the piston position beyond which the GEN function refloats the piston when GEN is ON. Piston rotation rate limits are in the individual piston-cylinder file.
Example	Typical command: "READY2=USER, 3, 10" Typical reply: "USER, 3.0mm, 10Paa"
Error	See 9.3.2 Error Messages ERR #1,2,3,4 Invalid arguments
See Also	3.4, 3.11.1.1, SETUP, VACP, PISTONRDYx(=), READYCK(=)

원문: Fluke Calibration PG7302 메뉴얼(영문) · 제조사 원문 자료입니다. 사양은 제조사 사정에 따라 변경될 수 있습니다.

READYCK(=)	
Purpose	To set or check the ready check flag, or, used to determine if a *Not Ready* OT READY condition has occurred.
Syntax	"READYCK=1" "READYCK"
Default	READYCK=0
Argument	N/A
Remarks	The internal ready check flag is cleared whenever PG7000 reaches a *Not Ready* (NR) condition. The "READYCK" command will return the status of this flag. This flag can be set only by sending the "READYCK=1" command while PG7000 is in a *Ready* condition. If you send the "READYCK=1" command when PG7000 is in a *Not Ready* (NR) condition, the reply will be "READYCK=0". If you set READYCK=1 when PG7000 achieves a *Ready* (R) condition, you can use READYCK later to determine if a *Not Ready* (NR) condition has occurred. If NR has occurred READYCK returns "0". If NR has not occurred READYCK returns "1".
Example	Typical command: "READYCK=1" Typical reply: "READYCK=1" (If PG7000 condition is *Ready*) Typical reply: "READYCK=0" (if PG7000 condition is *Not Ready*)
Error	See 9.3.2 Error Messages ERR #1 If n is not a 1
See Also	3.4

REMOTE	
Purpose	To place PG7000 into a remote lock-out mode.
Syntax	"REMOTE"
Default	N/A
Argument	N/A
Remarks	A REMOTE command deactivates the front panel. All front panel controls will be disabled. The REMOTE command can only be canceled by a LOCAL command or by turning off PG7000 power then reapplying it.
Example	Typical command: "REMOTE" Typical reply: "REMOTE"
Error	None
See Also	LOCAL

RESET	
Purpose	To reset all operating parameters to factory default settings.
Syntax	"RESET"
Default	N/A
Argument	N/A
Remarks	The reset command can be given to return the PG7000 to a known state. This command is the same as locally executing a "Reset Sets".
Example	Typical command: "RESET" Typical reply: "RESET"
Error	None
See Also	3.11.9.1

RESUME	
Purpose	Resume the suspended process of setting a new pressure.
Syntax	"RESUME"
Default	N/A
Argument	N/A
Remarks	After setting a new target pressure using the "PS=" command the process of setting the pressure may be suspended after the PG7000 calculates the new target mass load. This is to allow the host program to instruct the operator to load mass if necessary and wait for confirmation from the operator that the mass loading operation is complete. The operator can load the mass without interference from AutoRotate or AutoGen if they are enabled. The "RESUME" command continues the pressure setting process, starting AutoRotate and AutoGen again if they are enabled. The activity status field of the "PR" query can be used to determine when the PG7000 has suspended operation and is waiting for the "RESUME" command.
Example	Typical command: "RESUME" Typical reply: "RESUME"
Error	None
See Also	3.9.11, 3.4, PS=, PR, MR, RESUME(=mode)

© 2011 Fluke Calibration

원문: Fluke Calibration PG7302 메뉴얼(영문) · 제조사 원문 자료입니다. 사양은 제조사 사정에 따라 변경될 수 있습니다.

RPMx	
Purpose	To send a command through PG7000 to a remote Fluke Calibration RPM connected to the PG7000 COM2 port.
Syntax	"RPMx,dddd" "RPMSx,dddd"
Default	N/A
Argument	x: 1-99
Remarks	x is the address of the RPM1. If x is omitted then the default address is 1. Address 99 is a global address to send a command to all RPM1s that are connected to the COM2 port. You must have an RPM connected and communicating properly for this command to work properly. The RPMS command is used to perform a write to the EPROM of the RPM1. This command should be used with caution because a given RPM1 register is only guaranteed for 10 000 rewrites. See the RPM1 manual for further information on writing to the EPROM. A "RPM,DP" command has the same syntax as sending *0100DP to the RPM from a remote computer. A "RPM,DP=6" has the same syntax as sending *0100EW*0100DP=6 to the RPM from a remote computer. The commands available are given in the RPM1 or RPM1 manual depending on the model. They allow you to change the RPM1 resolution, integration time, etc. The reply will be whatever the RPM1 returns.
Example	Typical command: "RPM,DP" or "RPM1, DP" Typical reply: "*0001DP=6"
Error	None
See Also	3.10, UDD=

RESUME(=*mode*)	
Purpose	Sets the resume "mode".
Syntax	"RESUME=*mode*"
Default	"RESUME=1"
Argument	*Mode:* '0' "RESUME" command is not needed to complete a remote pressure set operation . '1' "RESUME" command is needed to complete any remote pressure set operation
Remarks	"RESUME=1" is needed only if it is necessary for PG7000 operation to pause after a pressure target has been given to allow the operator to load mass. This is the case when using a manual mass set or when using AMH automated mass handling but manually loading additional masses to load with resolution higher than the AMH mass set resolution.
Example	Typical command: "RESUME=1" Typical reply: "RESUME=1"
Error	None
See Also	3.9.11, 3.4, PS=, RESUME

RESUME	
Purpose	Resume the suspended process of setting a pressure.
Syntax	"RESUME"
Default	N/A
Argument	N/A
Remarks	When "RESUME=1" using RESUME*(=mode),* after setting a new target pressure using the "PS=" command, the process of setting the pressure is suspended after the PG7000 calculates the new target mass load (and loads the if an AMH automatic mass handler is active). The pause is too allow a host program to instruct the operator to load trim mass if desired. The RESUME command ends the pause, allowing the auto-rotate and auto-generate functions to execute is enabled. The activity status field of the "PR" field can be used to determine when the PG7000 has suspended operation and is waiting for the "RESUME" command.
Example	Typical command: "RESUME" Typical reply: "RESUME"
Error	None
See Also	3.9.11, 3.4, PS=, PR=, RESUME*(=mode)*

원문: Fluke Calibration PG7302 메뉴얼(영문) · 제조사 원문 자료입니다. 사양은 제조사 사정에 따라 변경될 수 있습니다.

SETUP(=)	
Purpose	To change or read the current SETUP to be used.
Syntax	"SETUP=n" "SETUP"
Default	"SETUP=1"
Argument	N/A
Remarks	Up to 19 SETUP files can be created by the user to allow quick change from one configuration of pressure calculation sources to another. Each configuration can specify the source of the ambient measurements, the gravity, and the *Ready/Not Ready* criteria. The "AMBHx", "AMBPx", "AMBTx", "READYx", "VACP" and "PCTX" commands reference the SETUP command. The first setup ("SETUP=1") is reserved for the factory default setup, and cannot be changed. Setup #21 is reserved for remote access only. Selecting a setup that references an external device (barometer or vacuum gauge) can take up to 5 seconds to reply.
Example	Typical command: "SETUP=2" Typical reply: "2"
Error	See 9.3.2 Error Messages ERR #1 If setup is <1 or >21
See Also	3.10, AMBHx", "AMBPx", "AMBTx", "READYx", "VACP", "PCT

SN	
Purpose	To read the PG7000 serial number.
Syntax	"SN"
Default	N/A
Argument	N/A
Remarks	Each PG7000 is assigned a serial number. This command reads this number back.
Example	Typical command: "SN" Typical reply: "201"
Error	None

SPEED	
Purpose	To read the current piston rotation speed and rotation decay (deceleration).
Syntax	"SPEED"
Default	N/A
Argument	N/A
Remarks	The current piston rotation speed and decay rate are returned separated by a comma. The decay rate is returned as '0' if there is not enough valid data to calculate the rate. The speed will also be returned as '0' if the bell is not installed.
Example	Typical command: "SPEED" Typical reply: "44.2 rpm, 2.3 rpm/min
Error	None
See Also	3.9.5

TIME(=)	
Purpose	To read or set the internal real time clock.
Syntax	"TIME=HH:MMxp" "TIME"
Default	N/A
Argument	The time is in the HH:MMxp format. HH: The hour 1 to 12 MM: The minute 00 to 59 xp: "am" or "pm"
Remarks	The internal time clock is part of the internal calendar. The seconds are always set to "00" when setting the time.
Example	Typical command: "TIME=8:31PM" Typical reply: "8:31pm"
Error	See 9.3.2 Error Messages ERR #1 If invalid time argument
See Also	3.11.4.3

© 2011 Fluke Calibration

원문: Fluke Calibration PG7302 메뉴얼(영문) · 제조사 원문 자료입니다. 사양은 제조사 사정에 따라 변경될 수 있습니다.

UCOEF	
Purpose	To read the conversion coefficient used to convert Pascal to the current pressure unit of measure.
Syntax	"UCOEF"
Default	N/A
Argument	N/A
Remarks	Use this command to read the pressure conversion coefficient used to convert pressure in Pascal to the displayed pressure units. Pressure in Pascal multiplied by this coefficient yields the pressure in the PG7000 units.
Example	Typical command: "UCOEF" (current units are "kPa") Typical reply: "1.000000e-003"
Error	None
See Also	7.1.1, 3.9.3, UNIT

UDD(=)	
Purpose	To set or retrieve the settings for the user defined external barometer.
Syntax	"UDD=label,reqstr,skip,coef" "UDD"
Default	N/A
Argument	label: A user defined barometer label to identify this setup (1 to 3 ASCII char). Reqstr: The text string to be sent to the external barometer every 2 seconds to query it for a pressure measurement. It must consist of up to 20 printable ASCII characters only. skip: The number of leading characters to ignore from the external barometer's reply. coef: The pressure conversion coefficient that PG7000 will multiply the external barometer reply by to result in a measurement in Pascal.
Remarks	An external barometer must be defined first by the user before being selected to be used as source for atmospheric pressure values instead of the PG7000 internal barometer. The external barometer must accept the carriage return/line feed terminated request string every 2 seconds, and reply with a carriage return or carriage return/line feed terminated reply within the 2 second cycle. The COM2 port must also be setup properly according to the barometer's communications settings. After setting up the COM2 port and defining the device, you must then use the "AMBPx" and "SETUP" commands to direct PG7000 to use the external barometer if you want this device to be used as the source of atmospheric pressure values.
Example	Typical command: "UDD=DEV, PR, 4, 1000" (ext barometer is in kPa) Typical reply: "DEV, PR, 4, 1000.000"
Error	See 9.3.2 Error Messages ERR #1 label must not exceed 3 characters ERR #2 request string must not exceed 20 characters ERR #3 # of char to ignore must be 1 to 80 ERR #4 user defined coefficient cannot be 0
See Also	3.11.5.4, 3.10, AMBPx, SETUP

UDU(=)	
Purpose	To set or retrieve the USER DEFINED UNIT (use defined pressure unit of measure).
Syntax	"UDU=uuuuu,cccccc" "UDU"
Default	UDU not defined
Argument	uuuuu= User unit label (five characters maximum) ccccc= User coefficient (cannot be <=0)
Remarks	The USER COEFFICIENT (UCOEF) is a value that is used to convert the current pressure units to Pascal. You may assign up to 4 characters for the unit label. When selecting the unit to choose using the "UNIT" command, add a trailing 'a' to specify an absolute unit, else the unit will be a gauge unit.
Example	Typical command: "UDU=MyUn,.0015" Typical reply: "MyUn,.0015" Pressure in Pa = pressure in units/UCOEF
Error	See 9.3.2 Error Messages ERR #1 uuuuu must not exceed 4 characters ERR #2 user defined coefficient cannot be 0
See Also	3.9.3.1, 7.1.1, UNIT, UCOEF

원문: Fluke Calibration PG7302 메뉴얼(영문) · 제조사 원문 자료입니다. 사양은 제조사 사정에 따라 변경될 수 있습니다.

UDV(=)	
Purpose	To set or retrieve the settings for the user defined external vacuum gauge.
Syntax	"UDV=label,reqstr,skip,coef" "UDV"
Default	N/A
Argument	label: A user defined vacuum gauge label to identify this setup (1 to 3 ASCII char). Reqstr: The text string to be sent to the external vacuum gauge every 2 seconds to query it for a pressure measurement. It must consist of up to 20 printable ASCII characters only. skip: The number of leading characters to ignore from the external vacuum gauge's reply. coef: The pressure conversion coefficient that PG7000 will multiply the external vacumm sensor's reply by to result in a measurement in Pascal.
Remarks	An external vacuum gauge must be defined first by the user before being selected to be used as a source of vacuum pressure under the PG7601 bell jar instead of the internal vacuum sensor. The external vacuum gauge must accept the carriage return/line feed terminated request string every 2 seconds, and reply with a carriage return or carriage return/line feed terminated reply within the 2 second cycle. The COM2 port must also be setup properly according to the vacuum gauge's communications settings. After setting up the COM2 port and defining the device, you must then use the "VACPx" and "SETUP" commands to if you want the PG7000 to use the the external vacuum gauge as the source of values of vacuum in the PG7601 bell jar. It is also possible to use both an external barometer and an external vacuum sensor using the PG COM2 port. The barometer must be an RPM3 or RPM4 plugged into the PG COM2 port, and selected as an active external barometer. The vacuum sensor is then plugged into the RPM3/RPM4's COM2 port. The RPM3/RPM4's COM2 port must be set to the same settings as the vacuum sensor.
Example	Typical command: "UDV=DEV, PR, 4, 100" (ext vacuum sensor is in mbar) Typical reply: "DEV, PR, 4, 100.0000"
Error	See 9.3.2 Error Messages ERR #1 label must not exceed 3 characters ERR #2 request string must not exceed 20 characters ERR #3 # of char to ignore must be 1 to 80 ERR #4 user defined coefficient cannot be 0
See Also	3.11.5.5, 3.10, VACPx, SETUP, COM2

UL(=)	
Purpose	Set or read the upper limit of an external pressure generation/control component.
Syntax	"UL=xxxx" "UL"
Default	Default N/A.
Argument	xxxx= Controller's upper limit in the controller's pressure units
Remarks	An external pressure controller can have an upper limit set to prevent accidential overpressure conditions. The controller must be properly initialized prior to using this command. The reply will be in the controller's.format Please consult the controller's Operation and Maintenance Manual, UL Section, for details about it's upper limit and "UL" reply. Note that PCM pressure controllers are always set to the unit kPag
Example	Typical command: "UL=1000" Typical reply: "1000.00 kPa g"
Error	See the controller's manual for details about it's "UL" command. ERR #13 External controller not detected
See Also	3.9.9.3, PGEN

© 2011 Fluke Calibration

원문: Fluke Calibration PG7302 메뉴얼(영문) · 제조사 원문 자료입니다. 사양은 제조사 사정에 따라 변경될 수 있습니다.

UNIT(=)	
Purpose	Set or change the current pressure unit of measure and pressure measurement mode.
Syntax	"UNIT=xxxxx" "UNIT"
Default	"UNIT=MPa g" "UNIT=kPa g"
Argument	N/A
Remarks	The units in which PG7000 interprets and executes commands can be changed. The available units are: psi g psi a psi d psf g psf a psf d bar g bar a bar d mbarg mbara mbard Pa g Pa a Pa d kPa g kPa a kPa d MPa g MPa a MPa d MmHgg mmHga mmHgd InHgg inHga inHgd InWag inWaa inWad MmWag mmWaa mmWad kcm2g kcm2a kcm2d Mm (altitude available only with a vac reference) Ft (altitude available only with a vac reference) Xxxxg xxxxa Xxxxd The gauge/absolute/differential trailing designator 'g', 'a' or 'd', always appears in the 5th character position. The gauge unit trailing designator 'g' does not have to be given to specify a gauge unit.
Example	Typical command: "UNIT=mbar" Typical reply: "mbarg"
Error	See 9.3.2 Error Messages ERR #1 Invalid unit specified ERR #20 Vacuum must be enabled with absolute unit
See Also	3.9.3, 3.9.4, UDU, UCOEF, MMODE

VACPx(=)	
Purpose	Set or read the source for the vacuum pressure measurement. Also optionally sets the USER defined measurement. This command is only valid for PG7601.
Syntax	"VACPx=source, meas" "VACPx=source" "VACPx
Default	INTERNAL
Argument	x: The Setup number from 1 to 21. See the SETUP command. Setup 21 is reserved for remote command use only. source: The measurement source. This can be INTERNAL, DEFAULT (normal), USER, RPM or the user defined vacuum "label" meas: The current measurement used in Paa. This can only be set if the source argument is USER. If specified, the limit for this argument is 0 to 99 Paa.
Remarks	PG7601 has an internal vacuum pressure gauge that can be used as the source of values of reference vacuum under the bell jar used in pressure calculations. You may also request that another source be used for this measurement. The range of the internal gauge is 0 to 20 Paa. The measurement source can be the internal gauge, a user defined fixed value, the manufacturer's fixed default value, an external RPM or a user defined external vacuum gauge. If an external RPM or a user defined external vacuum is chosen, you must setup the COM2 port to the proper settings. It is also advised to set this up prior to selecting the setup to make the device active. If you specify "RPM" or the user defined barometer "label" , then all other barometer source setups set to "RPM" or the user defined barometer will change to this source, as it is a global selection. The SETUP function allows 19 separate source configurations for the various SETUP variables to be saved in 19 files. The SETUP command selects which of the files to make active. The SETUP command selects which of the 19 to use. Setup number 1 is restricted as INTERNAL only to serve as a manufacturer's fixed Setup, and cannot be changed.
Example	Typical command: "VACP2=USER,10" Typical reply: USER, 10.0 Paa" Typical command: "VACP9=INTERNAL" Typical reply: "INTERNAL, 13.2 Paa"
Error	See 9.3.2 Error Messages ERR #1 The setup number x is invalid ERR #2 The source argument is invalid ERR #3 The meas argument is invalid
See Also	3.10, 3.11.5.5, SETUP, COM2, UDV

원문: Fluke Calibration PG7302 메뉴얼(영문) · 제조사 원문 자료입니다. 사양은 제조사 사정에 따라 변경될 수 있습니다.

VAC(=)	
Purpose	To set or read PG7000 reference mode. This command is only valid for PG7601.
Syntax	"VAC=n" "VAC"
Default	VAC=0
Argument	n = 1: PG7000 is being operated with a bell jar and vacuum n = 0: PG7000 is being operated at atmospheric pressure
Remarks	You must let PG7000 know when you are operating under vacuum. The reported PG7000 measured pressure will then reference the vacuum.
Example	Typical command: "VAC=1" Typical reply: "VAC=1"
Error	See 9.3.2 Error Messages ERR #1 If n not set to 1 or 0
See Also	3.9.4, MODE

VENT(=)	
Purpose	To vent the test pressure to atmosphere if an automated pressure generation/control component is being used for automatic pressure generation.
Syntax	"VENT=n"
Default	VENT=0
Argument	n = 1: Activates the vent procedure on an automated pressure generation/control component n = 0: Closes exhaust valve on an automated pressure generation/control component
Remarks	When n = 1 the external automated pressure generation/control component test pressure will quickly decrease to atmospheric.
Example	Typical command: "VENT=1" Typical reply: "VENT=1"
Error	See 9.3.2 Error Messages ERR #1 If n not set to 1 or 0
See Also	3.9.9, PPC, PGEN

VER	
Purpose	Read the version number of the internal software.
Syntax	"VER"
Default	N/A
Argument	N/A
Remarks	The software version of the EPROM can be read.
Example	Typical command: "VER" Typical reply: "DH INSTRUMENTS, INC PG7302 Ver2.00"
Error	None

VOL	
Purpose	Read or set the currently active test volume for AutoGen when using a PG7302 or PG7307 with a PPCH pressure controller
Syntax	"VOL=*cc*" "VOL"
Default	"VOL=30"
Argument	*cc*: The test volume in cubic centimeters (0 to 300)
Remarks	This setting only affects operation of a PG7302 or PG7302 (oil operated piston gauge) when using automated pressure control (AutoGen) with a PPCH pressure controller. Accurately specifying the test volume improves pressure control for AutoGeneration of initial piston float and for refloating. It is indispensable if the test volume is greater than 100 cc.
Example	Typical command: "VOL=50" Typical reply: "50"
Error	ERR #1 Invalid argument
See Also	3.9.9, 3.9.9.6

© 2011 Fluke Calibration

원문: Fluke Calibration PG7302 메뉴얼(영문) · 제조사 원문 자료입니다. 사양은 제조사 사정에 따라 변경될 수 있습니다.

4.4 Status System

The status system includes the status reporting system which reports general PG7000 events. The user can select which PG7000 events will cause a status change event. These events are then reported to the status system (bit7 and bit3 of the status byte register), which also must be configured for the STATus subsystem to generate the service requests described in Section 4.4.1, Status Reporting System.

There are two 16 bit event registers that make up the top layer of the status subsystem. The OPERation status register handles conditions that are normal for PG7000. The QUEStionable status register handles events that could cause measurements to be made under questionable conditions.

4.4.1 Status Reporting System

The PG7000 status reporting system is used to track and report system status and errors. The status subsystem is layered under and reports to the status reporting system. It follows the model of the IEEE Std 488.2 and works for the COM1 and the IEEE-488 port with slight differences. PG7000 can be programmed to respond to various status conditions by asserting the SRQ of the IEEE-488 interface. The COM1 port cannot be supported in this manner, so polling must be used.

4.4.1.1 Status Byte Register

PG7000 contains an 8 bit status byte register that reflects the general status of PG7000.

Table 26. Status Byte Register

OPER (128)	RQS/MSS (64)	ESB (32)	MAV (16)	N/A (8)	ERROR (4)	N/A (2)	RSR (1)

This register is affected by the PG7000 reply output queue, the error queue, the Standard Event Status register, the Ready Event Status register, and the STATus subsystem.

(“∗STB?” or “∗SRE *n”)*

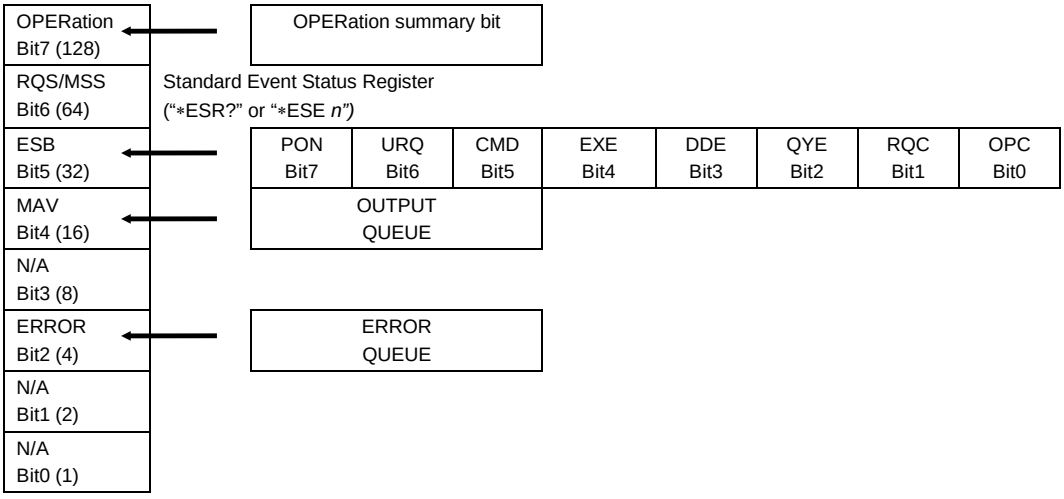

Figure 12. Status Byte Register

The status byte register can be read using the “*STB?” query, or by performing a serial poll on the IEEE-488 bus. If you read this using a serial poll then bit 6 is the RQS. If the “∗STB?” query is used, then bit 6 is the MSS bit. All of the other bits are common to both types of query.

Each of these status bits can cause an SRQ to occur. The Service Request Enable Register (“∗SRE” program message) determines which of these flags are able to assert the SRQ line. This enabled register has a matching set of bits that

원문: Fluke Calibration PG7302 메뉴얼(영문) · 제조사 원문 자료입니다. 사양은 제조사 사정에 따라 변경될 수 있습니다.

each will enable the designated bit to cause an SRQ, except for the RQS/MSS bit(s) which cannot cause an SRQ. If you set this register to 20 ($14 hex), an SRQ will occur if the MAV or the ERROR bit are set. The description of these bits are given as:

- **OPER**: OPERational event register summary bit (Bit 7)

  This bit is not supported by PG7000.
- **RQS**: Requested Service (Bit 6)

  Indicates that the SRQ line of the IEEE-488 interface has been asserted by PG7000. This bit is cleared when a serial poll is performed on PG7000, and is a part of the status byte register when read using a serial poll. This bit does not apply if the COM1 port is being used.
- **MSS**: Master Summary Status (Bit 6)

  Indicates that an event or events occurred that caused PG7000 to request service from the Host, much like the RQS bit. Unlike the RQS bit, it is READ ONLY and can be only cleared when the event(s) that caused the service request are cleared.
- **ESB**: Event Summary Bit (Bit 5)

  Indicates if an enabled bit in the Standard Event Status Register became set. (See the section below.)
- **MAV**: Message Available Bit (Bit 4)

  Indicates that at least one reply message is waiting in the PG7000 IEEE-488 output queue.
- **ERR**: Error Queue not empty (Bit 2)

  Indicates that at least one command error message is waiting in the PG7000 IEEE-488 error message queue. Use the “SYSTem:ERRor?” query to get this message.

4.4.1.2 Standard Event Register

PG7000 contains an 8 bit Standard Event Register that reflects specific PG7000 events that are not RPT dependent. Enabled events in this register will set or clear the ESB bit of the status byte register.

Table 27. Standard Event Register

PON (128)	URQ (64)	CMD (32)	EXE (16)	DDE (8)	QYE (4)	RQC (2)	OPC (1)

This register can be read using the “*ESR?” query. Each of these status bits can set the ESB bit of the status byte register, causing a SRQ to occur IF the ESB bit is enabled to do so. The Standard Event Status Enable Register (“*ESE” program message) determines which of these flags are able to assert the ESB bit. The description of these bits are given as:

- **PON**: Power On (Bit 7)

  Indicates that the PG7000 power has been cycled since the last time this bit was read or cleared.
- **URQ**: User Request (Bit 6)

  Indicates that PG7000 was set to local operation manually from the front panel by the user (pressing the ESC key).
- **CMD**: Command Error (Bit 5)

  Indicates that a remote command error has occurred. A command error is typically a syntax error in the use of a correct program message.
- **EXE**: Execution Error (Bit 4)

  Indicates if a remote program message cannot be processed due to device related condition.

© 2011 Fluke Calibration

원문: Fluke Calibration PG7302 메뉴얼(영문) · 제조사 원문 자료입니다. 사양은 제조사 사정에 따라 변경될 수 있습니다.

TS-TL-FLK-093

we measure, we calibrate, we validate.
㈜테솔 · www.tessol.com TS-TL-FLK-093 171 / 214
KOLAS 국제공인교정기관 · ISO/IEC 17025

- **DDE**: Device Dependent Error (Bit 3)

  Indicates that an internal error has occurred in PG7000 such as a transducer time-out.
- **QYE**: Query Error (Bit 2)

  Indicates that an error has occurred in the protocol for program message communications. This is typically caused by a program message being sent to PG7000 without reading a waiting reply.
- **RQC**: Request Control (Bit 1)

  This bit is not supported as PG7000 cannot become the active controller in charge.
- **OPC**: Operation Complete (Bit 0)

  Indicates that PG7000 has completed all requested functions.

4.5 High Line Differential Mode Programming Examples

High line differential measurement mode is only available with a PG7102 or PG7202 piston gauge (see Section 3.9.4.2).

4.5.1 Recommended sequence for a host program to remotely set a new high line pressure and enable high line differential mode

Select the desired piston-cylinder and mass set in the reference and tare PG7000s. Select the desired pressure unit of measure in which to set the line pressure. Ensure that the reference PG7000 COM2 port and the tare PG7000 COM1 port have identical configurations and that a valid RS232 connection is made between them. The line pressure setting process is sequential, following the same steps as local line pressure setting (see Section 3.9.3.2). The line setting process can be aborted at any time by sending the "*ABORT*" command.

❶ Request a new line pressure in the current PG000 pressure unit of measure:

Send: *"HLDLINEP=2000"* (Request a line pressure of 2 000)

Reply: "2000.0" (The actual nominal line pressure that will be set)

❷ Query for the mass load needed to set the line pressure:

Send: *"MR"* (Request the mass load for the line pressure)

Reply: "10.600023 Kg, 10.6 Kg, 0.000 g" (Get the mass load)

❸ Display the mass value to load, and instruct the user to load the mass, open the bypass valve and float the pistons. After this has occurred, the user will select to continue. A message should then prompt the user to close the bypass valve and set the two pistons to + 1.0 mm. Also, the piston positions of the reference and tare PG7000s should be displayed until the user elects to continue:

Send: *"HLDPPOS"* (Request the reference and tare PG7000 piston positions. Repeat until user elects to continue)

Reply: "0.4, 0.5" (Reference and tare positions)

❹ When the user indicates ready, the 30 second (or less) natural fall rate measurement function should be started.

Send: *"HLDLINEP=NEXT"* (Request the fall rate function to start)

Reply: "BUSY1" (Indicates that the fall rate function is running)

원문: Fluke Calibration PG7302 메뉴얼(영문) · 제조사 원문 자료입니다. 사양은 제조사 사정에 따라 변경될 수 있습니다.

❺ The status of the fall rate step can be monitored by sending the HLDLINEP command until the reply is no longer "BUSY1". During this time, the reference and tare piston positions should also be monitored. So, while using HDLPPOS to monitor piston, occasionally send HLDLINEP looking for the response OK.

Send: *"HLDPPOS"* (Request the reference and tare PG piston positions)

Reply: "0.4, 0.5, 0.1" (Reference and tare piston positions)

Send: *"HLDLINEP"* (Check if the step is completed)

Reply: *"*BUSY1*"* (Step is still busy, continue in this loop)

Reply: *"*OK*"* (Step is complete; go to next step)

❻ The results of the natural fall rate measurement can now be obtained:

Send: *"HLDFALL"* (Request the natural fall rate results)

Reply: "-0.1, -0.2" (Average reference and tare natural fall rates in mm/min)

Reply: *"*ERR #41*"* (One of the piston positions had exceeded ± 2.9 mm)

❼ The natural fall rate measurement function can be repeated if the user is not satisfied with the step, or if one of the piston positions has exceeded ± 2.9 mm, returning to Step (3):

Send: *"HLDLINEP=REPEAT"* (Request the natural fall rate function to start again)

Reply: "OK"

And then:

Send: *"HLDLINEP=NEXT"* (Request the natural fall rate function to start again)

Reply: "BUSY1"

❽ To keep the resulting natural fall rate:

Send: *"HLDLINEP=NEXT"* (Request to save the natural fall rate)

Reply: "OK" (This step just saves the fall rate, so a busy reply is not used)

Reply: "ERR #35" (Current step not complete or failed)

❾ The program should then instruct the user to open the bypass valve, crossfloat the pistons to within about 150 mg, close the bypass valve, set both pistons to about +1.0 mm, open the bypass and press ENTER. The piston positions along with the real time crossfloat fall rate difference (the difference between the current fall rate difference and the natural fall rate difference) should be displayed and updated until the user elects to start the crossfloat by pressing ENTER:

Send: *"HLDPPOS"* (Request the reference and tare PG piston positions)

Reply: "-0.4, -0.5, 10.2" (Reference and tare piston positions, real time crossfloat fall rate difference)

❿ When ENTER is pressed, start the crossfloat measurement function. Send:

Send: *"HLDLINEP=NEXT"* (Request the crossfloat function to start)

Reply: "BUSY2" (Indicates that the crossfloat function is running)

⓫ The status of the crossfloat step can be monitored by sending the HLDLINEP command until the reply is no longer "BUSY2". The reference, tare piston positions and the crossfloat fall rate should also be monitored:

Send: *"HLDPPOS"* (Request the reference and tare piston positions)

Reply: "0.4, 0.5, 6.9" (Reference and tare positions, average crossfloat fall rate difference since the start of this function)

Send: *"HLDLINEP"* (Check if the step is completed)

Reply: *"*BUSY2*"* (Step is still busy, continue in this loop)

Reply: *"*OK*"* (Step is still complete; go to next step)

© 2011 Fluke Calibration

원문: Fluke Calibration PG7302 메뉴얼(영문) · 제조사 원문 자료입니다. 사양은 제조사 사정에 따라 변경될 수 있습니다.

we measure, we calibrate, we validate.
㈜테솔 · www.tessol.com TS-TL-FLK-093 173 / 214
KOLAS 국제공인교정기관 · ISO/IEC 17025

TS-TL-FLK-093

The results of the crossfloat fall rate measurement step can now be obtained:

Send: *"HLDXFLT"* (Request the crossfloat results)

Reply: "6.9.1, 0.046 g" (Crossfloat fall rate difference and recommended trim mass adjustment)

Reply: "ERR #41" (One of the piston positions has exceeded ± 2.9 mm)

⓬ The crossfloat fall rate measurement function can be repeated if the user is not satisfied with the step, or if one of the piston positions has exceeded ± 2.9 mm, by returning to Step (9).

Send: *"HLDLINEP=REPEAT"* (Request the crossfloat function to start again)

Reply: "OK"

And then:

Send: *"HLDLINEP=NEXT"* (Request the crossfloat function to start again)

Reply: "BUSY2"

⓭ The crossfloat fall rate measurement results can be saved:

Send: *"HLDLINEP=NEXT"* (Request to save the crossfloat data)

Reply: "OK"

Reply: "ERR #40" (Current step not complete or failed)

You are now in high line differential mode. High line differential target pressures can be accomplished using the normal PG7000 remote commands "PS" and "MS", or locally. The natural fall rate difference and crossfloat piston-cylinder temperatures for the last line pressure setting sequence (same is the **<2view>** screens of HL dif mode) can be reviewed anytime using the "HLDVIEW" command.

4.5.2 Recommended Sequence for a Host Program to Remotely Enable High Line Differential Mode using the Last Line Pressure Setting

The line pressure must already be established using the steps in the previous example **(recommended sequence for a host program to remotely set a new line pressure and enable high line differential mode).** Use the "HLDVIEW" command to verify whether the current line pressure is as expected. Ensure that the reference PG7000 COM2 port is configured identically to the tare PG7000 COM1 port and that the two COM ports are connected properly.

❶ Change the measured mode to high line differential:

Send: *"UNIT=UUUUD"* (Request for unit UUUU and high line differential mode)

Reply: "UUUUD" (Unit and measurement mode set complete)

Or

Send: *"MMODE=D"* (Request for high line differential mode)

Reply: "D" (Measurement mode set complete)

High line differential target pressures can now be accomplished using the normal PG remote commands "PS" and "MS", or using local operation. The current line pressure results can be reviewed using the "HLDVIEW" command.

원문: Fluke Calibration PG7302 메뉴얼(영문) · 제조사 원문 자료입니다. 사양은 제조사 사정에 따라 변경될 수 있습니다.

we measure, we calibrate, we validate. ㈜테솔 · www.tessol.com TS-TL-FLK-093 174 / 214

KOLAS 국제공인교정기관 · ISO/IEC 17025

TESSOL Technical Library

TS-TL-FLK-093

5. Maintenance, Adjustments and Calibration

5.1 Introduction

PG7000 was designed for very low maintenance operation. No maintenance is required other than:

- Adjustment of piston position measurement system (see Section 5.2.2)
- Cleaning piston-cylinders (see Section 5.3.4)
- Lubricating piston-cylinder modules (see Section 5.3.5)
- Emptying oil run off tray (PG7302, PG7202 only) (see Section 5.2.3)
- Cleaning masses (see Section 5.4.1)
- Filling piston-cylinder module lubricating liquid reservoir (PG7202 only) (see 5.3.3).
- Purging mounting post drain (PG7202 only) (see Section 5.2.4)
- Adjustment/calibration of on-board ambient conditions sensors (see Section 5.2.1)
- Calibration of piston-cylinder temperature platinum resistance thermometer (PRT) (see Section 5.2.1.5)
- Calibration of reference vacuum sensor (PG7601 only) (see Section 5.2.1.6)
- Calibration of piston-cylinder modules and mass set (see Sections 5.3.2, 5.4.2)
- Drive belt replacement (see Section 5.2.54)

This section provides information on maintenance, adjustment and calibration procedures and certain repair procedures.

Note

Calibration, maintenance and repair services for PG7000 are offered by authorized Fluke Calibration Authorized Service Providers (see Table 32).

⚠ Caution

- **PG7000 is a sophisticated measuring instrument with advanced on-board features and functions. Before assuming that unexpected behavior is caused by a system defect or breakdown, use this manual and other training facilities to become thoroughly familiar with PG7000 operation. For rapid assistance in specific situations, see Section 6, Troubleshooting.**
- **PG7000 is covered by a limited 1 year warranty (see Section 7.4). Unauthorized service or repair during the warranty period is undertaken at the owner's risk and may cause damage that is NOT covered under product warranty and/or may void the product warranty.**

© 2010 Fluke Calibration

원문: Fluke Calibration PG7302 메뉴얼(영문) · 제조사 원문 자료입니다. 사양은 제조사 사정에 따라 변경될 수 있습니다.

5.2 Platform

5.2.1 Calibration/Adjustment of On-Board Measurement Functions

5.2.1.1 Principles

The PG7000 Platform includes sensors and systems to measure ambient and instrument conditions. These sensors and systems may need calibration or adjustment. The calibration and/or adjustments are performed using functions accessed by pressing **[SPECIAL]** and selecting **<7cal>**.

The on-board measurement functions that can be adjusted or calibrated include:

- Barometric pressure sensor
- Relative humidity sensor
- Ambient temperature sensor
- Piston-cylinder module temperature sensor
- Piston position measurement system
- Reference vacuum gauge (PG7601 only)

The ambient conditions sensors and the vacuum gauge are generally verified and adjusted relative to a reference without being removed from the platform. The measurement uncertainty specification of the on-board sensor should be taken into consideration when selecting a reference relative to which to adjust them (see Section 1.2.1.2). The ambient pressure, temperature and relative humidity sensors, in particular, do not require a high level reference.

The PG7000 CAL function supports a user defined adder and multiplier that are used to offset and, if necessary, adjust the slope of the sensors output. The adder and multiplier adjust the sensor output as follows:

Corrected Output = (Measured Output X Multiplier) + Adder

Where:

- Corrected output, measured output and adder are in the current unit of measure of the sensor
- Multiplier is dimensionless

[SPECIAL], **<7cal>** provides capabilities to view internal sensor outputs and edit their Adders and Multipliers. The CAL view function provides an additional digit of resolution relative to other displays of internal sensor outputs. To calibrate or adjust the on-board sensors, compare their outputs to a reference and adjust the corresponding Adder and/or Multiplier as needed to arrive at acceptable agreement.

5.2.1.2 Barometric Pressure Sensor

❍ **PURPOSE**

To view and adjust the output of the on-board barometric sensor.

원문: Fluke Calibration PG7302 메뉴얼(영문) · 제조사 원문 자료입니다. 사양은 제조사 사정에 따라 변경될 수 있습니다.

TS-TL-FLK-093

we measure, we calibrate, we validate. ㈜테솔 · www.tessol.com TS-TL-FLK-093 176 / 214

KOLAS 국제공인교정기관 · ISO/IEC 17025

OPERATION

To view the output of the barometric pressure sensor, press **[SPECIAL]** and select **<1atmp>**, **<1view>**. The display is:

1. Current reading of the barometric sensor in current pressure unit of measure.
2. Indication that this is a barometric pressure sensor display.
3. Current value of the Pressure Multiplier applied to the barometric pressure sensor reading.
4. Current value of the Pressure Adder (always in Pascal [Pa]) applied to the barometric pressure sensor reading.

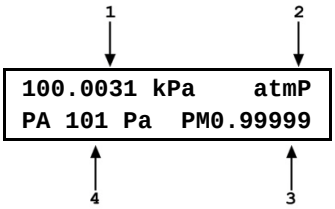

To adjust the values of PA and/or PM press **[SPECIAL]** and select **<1atmP>**, **<2cal>** to access a screen in which the values of PA and PM can be edited. From here, press **[ESCAPE]** and select **<1atmP>**, **<1view>** to view the barometric sensor reading with the edited calibration coefficients applied.

Note

See Section 5.2.1.1 for an explanation of Adders and Multipliers and their use in adjusting internal sensors.

5.2.1.3 AMBIENT TEMPERATURE sensor

PURPOSE

To view and adjust the output of the on-board ambient temperature sensor.

Note

- **The ambient temperature sensor and piston-cylinder module temperature sensor are of the same technology and read in the same manner. However, their recommended calibration procedures differ reflecting the different measurement uncertainty specifications of the two measurements. See Section 5.2.1.5 for recommended calibration procedure on the piston-cylinder module temperature sensor, which is used to measure temperature with much lower uncertainty.**
- **The ambient temperature sensor is housed in the temperature - humidity (TH) Probe along with the humidity sensor. Each sensor maintains it's own calibration. See Section 5.2.1.4.**

OPERATION

To view the output of the ambient temperature sensor, press **[SPECIAL]** and select **<2ambT>**, **<1view>**. The display is:

1. Current reading of the ambient temperature sensor.
2. Indication that this is an ambient temperature display.
3. Current value of the Temperature Multiplier applied to the ambient temperature sensor reading.
4. Current value of the Temperature Adder (always in °C) applied to the ambient temperature sensor reading.

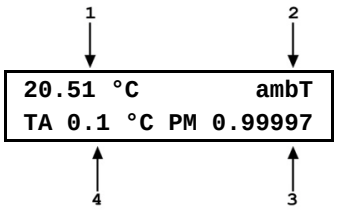

To adjust the values of TA and/or TM press **[SPECIAL]** and select **<2ambT>**, **<2cal>** to access a screen in which the values of TA and TM can be edited. From here, press **[ESCAPE]** and select **<2ambT>**, **<1view>** to view the ambient temperature sensor reading with the edited calibration coefficients applied.

© 2011 Fluke Calibration

원문: Fluke Calibration PG7302 메뉴얼(영문) · 제조사 원문 자료입니다. 사양은 제조사 사정에 따라 변경될 수 있습니다.

we measure, we calibrate, we validate.
㈜테솔 · www.tessol.com TS-TL-FLK-093 177 / 214
KOLAS 국제공인교정기관 · ISO/IEC 17025

TESSOL Technical Library
TS-TL-FLK-093

Note

See Section 5.2.1.1 for an explanation of Adders and Multipliers and their use in adjusting internal sensors.

5.2.1.4 Relative Humidity sensor

❍ **PURPOSE**

To view and adjust the output of the on-board relative humidity sensor.

Note

The relative humidity sensor is housed in the temperature - humidity (TH) Probe along with the ambient temperature sensor. Each sensor maintains it's own calibration. See Section 5.2.1.3.

❍ **OPERATION**

To view the output of the relative humidity sensor, press **[SPECIAL]** and select **<3%RH>**, **<1view>**. The display is:

1. Current reading of the relative humidity sensor.
2. Indication that this is a relative humidity display.
3. Current value of the Humidity Multiplier applied to the relative humidity sensor reading.

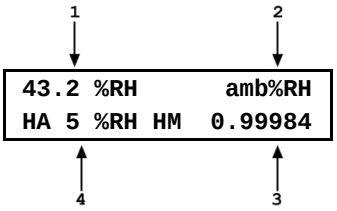

4. Current value of the Humidity Adder (always in %RH) applied to the relative humidity sensor reading.

To adjust the values of HA and/or HM press **[SPECIAL]** and select **<3%RH>**, **<2cal>** to access a screen in which the values of HA and HM can be edited. From here, press **[ESCAPE]** and select **<3%RH>**, **<1view>** to view the relative humidity sensor reading with the edited calibration coefficients applied.

Note

See Section 5.2.1.1 for an explanation of Adders and Multipliers and their use in adjusting internal sensors.

5.2.1.5 piston-cylinder module temperature sensor

❍ **PURPOSE**

To view and adjust the output of the on-board piston-cylinder module temperature sensor.

❍ **PRINCIPLE**

Piston-cylinder module temperature is measured by a platinum resistance thermometer (PRT) built into the PG7000 mounting post. The resistance of the PRT is read by PG7000's internal ohmic measurement system and temperature is calculated as follows:

Temperature = (Measured resistance - resistance at 0 °C)/slope

The PRT is a 10052 4-pole type following DIN Norm 43760. The current supplied to the PRT is 1 mA and the slope of resistance relative to temperature over the valid temperature range of 0 to 40 °C is 0.3896 Ω/°C. The uncertainty specification is ± 0.1 °C (± 0.04 Ω) with a resolution of 0.01 °C.

The ohmic measurement system in PG7000 is self-calibrated using on-board 100 and 110 Ω reference resistors.

The normal calibration procedure of the PRT is to remove it from the PG7000 mounting post and determine its offset (actual resistance at 0 °C) by calibration.

원문: Fluke Calibration PG7302 메뉴얼(영문) · 제조사 원문 자료입니다. 사양은 제조사 사정에 따라 변경될 수 있습니다.

To remove the PRT from the PG7000 mounting post, follow the instructions provided in Section 5.2.1.5, Mounting Post PRT Removal.

The value of resistance at 0 °C and the slope, if desired, can be edited to reflect the new calibration by pressing **[SPECIAL]** and select **<4PCT>**.

Note

Though the ambient temperature sensor and piston-cylinder module temperature sensor are of the same technology and read in the same manner, the recommended calibration procedures differ reflecting the difference in measurement uncertainty needed. The ambient temperature sensor (whose measurement uncertainty is ± 1 °C) is calibrated by simple offset relative to an external reference measurement (see Section 5.2.1.3).

❍ **OPERATION**

To view the output of the piston-cylinder module temperature sensor, press **[SPECIAL]** and select **<4PCT>**, **<1view>**. The display is:

1. Current reading of the piston-cylinder module temperature sensor converted to degrees Centigrade.
2. Indication that this is a piston-cylinder module temperature display.
3. Current value of the resistance slope relative to temperature.
4. Current value of the offset at 0 °C in ohm.

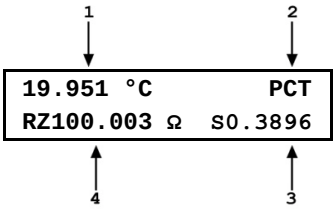

To adjust the values of **RZ** and/or **S**, press **[SPECIAL]** and select **<4PCT>**, **<2cal>** to access a screen in which the values of **RZ** and **S** can be edited. From here, press **[ESCAPE]** and select **<4PCT>**, **<1view>** to view the piston-cylinder module temperature reading with the edited calibration coefficients applied.

Mounting Post PRT Removal

To remove the mounting post PRT:

❶ Remove the piston-cylinder module from the mounting post and replace with the ORANGE storage plug.

❷ Disconnect the PG7000 Platform from the PG7000 Terminal.

❸ Invert the PG7000 Platform so that the bottom of the platform is up. Support the platform so that it does not tip over. A simple solution is to place the platform upside down on a sturdy box which is smaller than the outside platform dimensions and is also tall enough to allow the mounting post to be suspended.

❹ Remove the six socket head screws (3 mm) around the perimeter of the platform.

❺ Lift the platform up and carefully disconnect the sensor leads at their board connections, noting their locations.

❻ For PG7607 and PG7601, loosen - **but do not remove** - the four socket head screws (3 mm) located on the PRT/cable pass through plate. The plate is located on the inside of the base.

For all other PG7000 models, loosen knurled nut securing PRT by hand. It is not necessary to remove the knurled nut.

The PRT is able to be removed by gently grasping the shaft (not the wires) and sliding out in a straight motion.

❼ Slide the PRT out of the mounting post.

© 2011 Fluke Calibration

원문: Fluke Calibration PG7302 메뉴얼(영문) · 제조사 원문 자료입니다. 사양은 제조사 사정에 따라 변경될 수 있습니다.

TS-TL-FLK-093

we measure, we calibrate, we validate.
㈜테솔 · www.tessol.com TS-TL-FLK-093 179 / 214
KOLAS 국제공인교정기관 · ISO/IEC 17025

❽ After reinstalling the PRT and tightening the four socket head screws, reassemble in the reverse order. Thermal grease may be applied lightly to the PRT, if available. If the sensor lead locations were not noted correctly, follow Table 28.

❾ Reconnect the PG7000 terminal to the PG7000 Platform using the cable supplied.

❿ Power up PG7000 and verify proper operation of all on-board sensors.

Table 28. Mounting Post Wire Colors, Description and Location

WIRE COLORS	DESCRIPTION AND LOCATION
Black/Yellow/White	RPM (P4)
Black/Black/Black/Black	Vacuum Sensor (center raised micro board)
White/White/Yellow/Yellow	Mounting Post PRT (P2)
Purple/Blue/Red	Motor Solenoid (J2)
Gray/Orange/Green/Brown	LVDT (P1)

5.2.1.6 Reference Vacuum Gauge (PG7601 Only)

❍ **PURPOSE**

To view and adjust the output of the on-board reference vacuum gauge (PG7601 only).

❍ **OPERATION**

To view the output of the reference vacuum gauge, press **[SPECIAL]** and select **<6vac>**, **<1view>**. The display is:

1. Current reading of the vacuum gauge in Pascal. Reads **< > 20 >** whenever the current reading is greater than 20 Pa.
2. Indication that this is a vacuum display.
3. Current value of the Vacuum Multiplier applied to the vacuum gauge reading.
4. Current value of the Vacuum Adder (always in Pa) applied to the vacuum gauge reading.

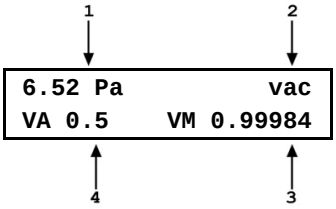

To adjust the values of VA and/or VM press **[SPECIAL]** and select **<6vac>**, **<2cal>** to access a screen in which the values of VA and VM can be edited. From here, press **[ESCAPE]** and select **<6vac>**, **<1view>** to view the vacuum gauge reading with the edited calibration coefficients applied.

Note

See Section 5.2.1.1 for an explanation of Adders and Multipliers and their use in adjusting internal sensors.

5.2.2 Piston Position Detection Adjustment

❍ **PURPOSE**

To adjust the piston position measurement system.

❍ **PRINCIPLE**

The PG7000 piston position measurement operates on the LVDT principle. There are coils mounted on either side of the piston-cylinder module mounting post and a ring on the inside of the mass loading bell acts as the sensor element. As the bell moves, the LVDT signal changes proportionally to bell position, and therefore piston position. The signal is translated into relative position in the ± 4.5 mm stroke of the piston (see Section 3.5). The piston position and fall rate can be viewed in the **[SYSTEM]** run screen (see Section 3.9.5).

원문: Fluke Calibration PG7302 메뉴얼(영문) · 제조사 원문 자료입니다. 사양은 제조사 사정에 따라 변경될 수 있습니다.

TESSOL Technical Library

TS-TL-FLK-093

we measure, we calibrate, we validate.
㈜테솔 · www.tessol.com TS-TL-FLK-093 180 / 214
KOLAS 국제공인교정기관 · ISO/IEC 17025

The piston position indication system can be realigned by an automated on-board routine. This routine sets and records the LVDT output at the piston hi and lo stop positions.

Note

When an AMH mass set is used, it is important to follow a specific procedure to adjust the piston position detection system. See Special Considerations When Using an AMH Mass Set in the ❍ OPERATION Section below.

❍ **OPERATION**

Note

- **Refer to piston stroke schematic Figure 8.**
- **If the PG7000 Platform is equipped with an AMH mass set, be sure to see Special Considerations When Using an AMH Mass Set.**

To automatically adjust the PG7000 piston position indication system, load the mass bell only on the piston. Then press **[SPECIAL]**, **<7cal>**, **<5Pposition>**, **<2cal>.**

The prompt **<Hold piston at max down stop>** appears. Place the piston in the fully down position (be sure to compress the springs so that the piston is truly at the low stop position by pressing down firmly on the piston or loading at least 5 more kg of mass). Press **[ENTER]**.

The prompt **<Hold piston at max up stop>** appears. Place the piston in the fully up position (be sure to compress the springs so that the piston is truly at the high stop position by applying pressure underneath the piston that is the equivalent to at least 5 kg greater than the pressure required to float the piston with the current load). Press **[ENTER]**.

Pressing **[SPECIAL]** and select **<7cal>**, **<5Pposition>**, **<1view>** allows current piston position and fall rate (see Section 3.9.5.1) to be viewed on the bottom line of the display. Position is on the left and fall rate is on the right.

Special Considerations When Using an AMH Mass Set

The tubular binary masses of an AMH mass set have some influence on the piston position detection system so it is important to adjust the piston position detection system with all the binary masses loaded.

To adjust the PG7000 piston position system when an AMH mass set is being used, proceed as follows:

❶ Vent pressure.

❷ Select **[SPECIAL]**, **<8AMH>**, .**<2control>**, **<2discreet>** and load all of the binary masses and none of the main masses (see Section 3.11.8.2).

❸ Press **[SPECIAL]**, **<7cal>**, **<5Pposition>**, **<2cal>**.

❹ The prompt **<Hold piston at max down stop>** appears. Check that the pressure under the piston is really vented and press **[ENTER]**.

❺ The prompt **<Hold piston at max up stop>** appears. Without changing the mass load, generate a pressure under the piston great enough to insure that the piston will go completely to the top stop. This requires a pressure equivalent to a mass load of 18 kg with an AMH-100 or 12 kg with an AMH-38. For example, if the mass handler is an AMH-100 and the piston is a 2 MPa/kg, generate 36 MPa or if the mass handler is an AMH-38 and the piston is a 10 kPa/kg, generate 120 kPa. Press **[ENTER].**

❻ Process is complete. Use **[SPECIAL]**, select **<7cal>**, **<5Pposition>**, **<1view>** to verify that piston position is **<+4.5 mm>** when fully up and **<-4.5 mm>** when fully down.

5.2.3 Emptying Oil Run-Off Tray (PG7202 and PG7302 Only)

In PG7302, small quantities of oil escape from beneath the piston-cylinder during the air purge process when installing a piston-cylinder module (see Section 2.3.2). In both PG7202 and PG7302, very small quantities of oil leak out of the top of the gap between the piston and cylinder when pressure is applied.

© 2011 Fluke Calibration

원문: Fluke Calibration PG7302 메뉴얼(영문) · 제조사 원문 자료입니다. 사양은 제조사 사정에 따라 변경될 수 있습니다.

we measure, we calibrate, we validate.
㈜테솔 · www.tessol.com TS-TL-FLK-093 181 / 214
KOLAS 국제공인교정기관 · ISO/IEC 17025

TESSOL Technical Library
TS-TL-FLK-093

Excess oil is collected and runs down the mounting post, and out through a transparent tube on the right side of the PG7202/PG7302 Platform to an oil run-off tray under the platform.

To empty the oil run-off tray, proceed as follows:

❶ Using a paper towel or cloth to catch oil drops, gently pull the transparent tube out of the oil run-off tray.

❷ Grasp the run-off tray by its protruding handle and slide it completely out and away from the PG7202/PG7302 Platform.

❸ Empty the oil run-off tray by shaking it out or removing the screws on the top plate.

❹ Clean the oil run-off tray. Discard any accumulated oil.

❺ Slide the oil run-off tray back into the PG7202/PG7302 Platform. Push it in beyond the holding stops until it seats firmly.

❻ Reinsert the transparent oil run-off tube into the hole in the run-off tray handle.

5.2.4 Purge Mounting Post Liquid Run Off (PG7202 Only)

In PG7202, minute quantities of the liquid that lubricates the gap between the piston and the cylinder flow out of the bottom of the gap. A passage in the mounting post (see Figure 13), channels this liquid directly to a low point drain. A DRAIN port on the rear of the PG7202 Platform (see Figure 3) allows the drain to be purged. The drain should be purged approximately once a day when PG7202 is being used extensively or before using PG7202 any time it has been idle with a piston-cylinder module installed for an extended period.

To purge the mounting post liquid drain, proceed as follows:

❶ Apply approximately 700 kPa (100 psi) to the mounting post using the normal gas pressure generation/control component.

❷ Cover the weep hole on the top of the DRAIN port fitting with a paper towel. Then loosen the DRAIN port DH500 gland slowly. A wrench for the DRAIN port gland is supplied in the PG7202 accessories.

❸ Wait for all of the pressure to escape.

❹ Repeat ❶ through ❸ until no oil is visible on the paper towel.

❺ Retighten the DH500 gland (torque to 15 Nm (12 ft.lb).

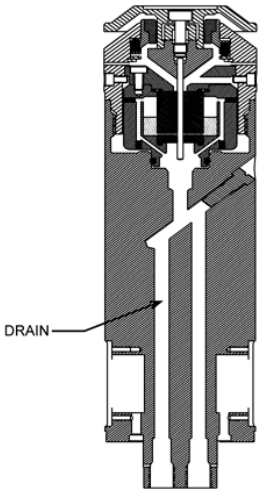

Figure 13. PG7202 Mounting Post Drain

5.2.5 Drive Belt Replacement

Periodic replacement of the drive system belts may be necessary to retain maximum performance of the rotational engagement system. Due to specific material properties of the drive belts, it is important that only genuine Fluke Calibration replacement parts be used.

Note

A set of spare drive belts is included in the accessories delivered with the PG7000 Platform.

원문: Fluke Calibration PG7302 메뉴얼(영문) · 제조사 원문 자료입니다. 사양은 제조사 사정에 따라 변경될 수 있습니다.

To remove the drive belts:

❶ Using a 2.5 mm Allen tool, remove the three screws on the outer diameter of the pulley plate. **Do not remove the screws on the inner diameter.** The pulley plate is located directly around the mounting post.

❷ Remove the two drive belts and replace them with the new ones.

❸ Realign the notched pulley with the pins on the drive motor.

❹ Replace the pulley plate and three screws.

❺ Engage the drive system to ensure proper operation.

5.3 Piston-Cylinder Modules

5.3.1 Disassembly, Cleaning and Maintenance

❍ **PURPOSE**

To disassemble and reassemble piston-cylinder modules and clean the piston-cylinder elements when necessary.

❍ **PRINCIPLE**

PG7000 piston-cylinders are high precision metrological assemblies. The annular gap between the piston and the cylinder is adjusted to be less than 1 micron, and in some cases, less than 0.5 micron. In normal operation, this space is lubricated by the pressurized medium (except PC-7200 in which the piston-cylinder modules are gas operated but the space is lubricated with a liquid). If the space becomes contaminated, usually due to foreign matter carried by the pressurized medium, PG7000 performance can be affected. Symptoms of contamination of the space (a **dirty** piston-cylinder) include:

- **Difficulty rotating piston:** The motorized rotation system is unable to start piston rotation.
- **Decay in rotation rate is more rapid than normal:** Piston rotation slows down too quickly, especially at low mass loads.
- **Poor sensitivity:** Very small mass changes do not have usual effect.
- **Noisy pressure:** The pressure defined when the piston is floating is not a stable as it usually is.

If any of these symptoms are present, they **may** be caused by a **dirty** piston-cylinder. The piston-cylinder module should be disassembled and the piston-cylinder cleaned. See Section 5.3.2.1 for instructions and disassembly and cleaning of gas operated, gas lubricated piston-cylinders (PC-7100 and PC-7600), Section 5.3.2.2 for gas operated, liquid lubricated piston-cylinders (PC-7200) and Section 5.3.2.3 for oil operated piston-cylinders (PC-7300).

Note

- **Gas lubricated piston-cylinders (PC-7100 and PC-7600) are highly sensitive to contamination, much more so than liquid lubricated piston-cylinders (PC-7200 and PC-7300). When using gas lubricated piston-cylinders, if symptoms of contamination develop rapidly with operation after cleaning, there is almost certainly a source of contamination within the PG7000 system. This source must be identified and eliminated to reduce piston-cylinder cleaning frequency. Very often, the source of contamination is the test gas supply itself (which contains humidity or lubricating oil) or it is the return from unclean gas operated DUTs that are connected to the PG7000 system.**
- **Gas operated, liquid lubricated piston-cylinders (PC-7200) can exhibit behavior similar to that of a dirty piston-cylinder when they are operated without lubricating liquid in the piston-cylinder module reservoir. Before disassembling a PC-7200 piston-cylinder module for cleaning due to poor performance, try filling the lubricating liquid reservoir (see Section 5.3.3).**

© 2011 Fluke Calibration

원문: Fluke Calibration PG7302 메뉴얼(영문) · 제조사 원문 자료입니다. 사양은 제조사 사정에 따라 변경될 수 있습니다.

TESSOL Technical Library
TS-TL-FLK-093

we measure, we calibrate, we validate.
㈜테솔 · www.tessol.com TS-TL-FLK-093 183 / 214
KOLAS 국제공인교정기관 · ISO/IEC 17025

⚠ Caution

The PG7000 piston-cylinder module design affords maximum protection to the piston-cylinder element assuring that it is protected during routine piston-cylinder handling. Cleaning the piston-cylinder requires disassembly of the module and exposure of the piston-cylinder to possible damage. These risks include damage to the critical working surfaces for all piston-cylinder sizes and chipping or breaking, especially for small diameter piston-cylinders. Only qualified personnel should undertake piston-cylinder disassembly and reassembly and the instructions and recommendations contained in this manual should be followed carefully throughout the operation.

5.3.2 Disassembly and Reassembly

5.3.2.1 Disassembly and Reassembly of gas operated, gas lubricated piston-cylinder modules (PC-7100/7600)

⚠ Caution

- **The PG7000 piston-cylinder module design affords maximum protection to the piston-cylinder element assuring that it is protected during routine piston-cylinder handling. Cleaning the piston-cylinder requires disassembly of the module and exposure of the piston-cylinder to possible damage. These risks include damage to the critical working surfaces for all piston-cylinder sizes and chipping or breaking, especially for small diameter piston-cylinders. Only qualified personnel should undertake piston-cylinder disassembly and reassembly and the instructions and recommendations contained in this manual should be followed carefully throughout the operation.**
- **NEVER touch the lapped surfaces (polished appearance) of the piston or cylinder with your bare hands. Body oils and acids can permanently etch the surfaces.**
- **The piston assembly (piston + piston head + adjusting mass + piston cap + piston cap retaining screw) is part of the PG7000 mass load. Its mass has been measured and is reported in the calibration report. Use caution when handling these parts, to avoid changing their mass by swapping parts, contaminating them or leaving parts out in reassembly. Out of tolerance pressure definitions could result.**

원문: Fluke Calibration PG7302 메뉴얼(영문) · 제조사 원문 자료입니다. 사양은 제조사 사정에 따라 변경될 수 있습니다.

10 and 20 kPa/kg Gas Piston-Cylinder Module

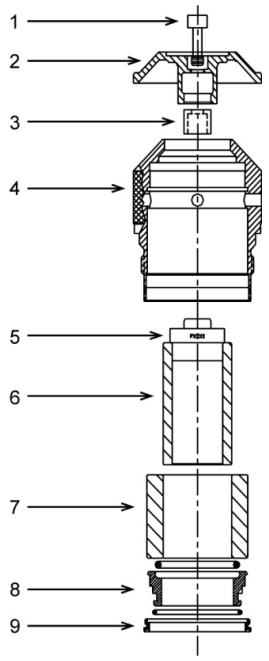

Figure 14. 10 and 20 kPa/kg Gas Piston-Cylinder Module (Expanded View)

❶ Place the piston-cylinder module upside down on a clean stable surface (piston cap (2) down).

❷ Using the sleeve nut tool (see Figure 16), remove the sleeve nut (9). The sleeve nut tool is a spanner that fits into the two holes on the sleeve nut.

Note

The sleeve nut for 10 and 20 kPa/kg modules has a left hand thread so it is loosened by turning clockwise.

❸ Remove the O-ring assembly (8). Then, being sure to support the cylinder (7) so it doesn't fall out, turn over the remaining assembly so that the piston cap (2) is up.

❹ While firmly holding down the cap (2), use a 5 mm Allen tool, to loosen the socket head cap retaining screw (1). The cap retaining screw will not fully disengage from the piston cap due to the adjustment mass (3). Gently remove the cap and screw from the assembly.

Note

When installing the piston cap during reassembly, remember to reinstall the adjustment mass (3).

❺ Remove the main module housing (4) by sliding it upward leaving the piston-cylinder assembly behind.

Step 6 applies only to 20 kPa/kg:

❻ Reinstall the piston cap (2) directly onto the piston head (6). Using the cap as a handle, slide the piston out of the cylinder. Take care not to cock the piston in the cylinder at the point at which it leaves the cylinder.

Steps 7, 8, and 9 apply only to 10 kPa/kg:

❼ Reinstall the piston cap (2) directly onto the piston head (5).

❽ Place the 10 kPa/kg piston insertion tool (see Figure 15) on the work surface with the large diameter down. DO NOT TOUCH the white plastic centering ring of the insertion tool.

❾ Holding the cylinder (7) to prevent it from falling out, place the piston-cylinder assembly onto the tool sliding the hollowed end of the piston (6) onto the tool shaft. Carefully allow the cylinder to drop down over the white plastic centering ring. Holding the cylinder, gently remove the piston (6) from the tool. Finally, remove the tool from the cylinder.

Note

In reassembly, the end of the cylinder marked with the serial number must enter the main module housing first.

⚠ Caution

The orientation of the piston on the cylinder is important. The end of the cylinder that is marked with the serial number should go into the sleeve and/or main module housing first. The piston enters the end of the cylinder that is marked with the serial number. Installing the cylinder with the wrong orientation may lead to out of tolerance measurements.

© 2011 Fluke Calibration

원문: Fluke Calibration PG7302 메뉴얼(영문) · 제조사 원문 자료입니다. 사양은 제조사 사정에 따라 변경될 수 있습니다.

Figure 15. 10 kPa/kg Piston Insertion Tool

Figure 16. Gas Piston-Cylinder Module Sleeve Nut Tool

원문: Fluke Calibration PG7302 메뉴얼(영문) · 제조사 원문 자료입니다. 사양은 제조사 사정에 따라 변경될 수 있습니다.

50, 100 and 200 kPa/kg Piston-Cylinder Modules

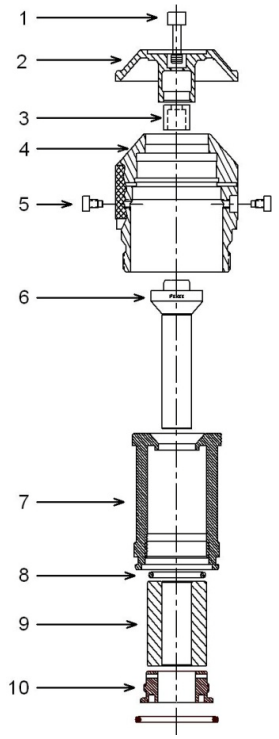

Figure 17. 50, 100 and 200 kPa/kg Gas Piston-Cylinder Modules (Expanded View)

❶ Place the piston-cylinder module on a clean stable surface with the piston cap (2) up.

❷ Using a 3 mm Allen tool, loosen the two sleeve retaining socket head screws (5) from the opposing sides of the main module housing (4).

Note

In reassembly, after the two sleeve retaining screws (5) are installed, the sleeve (7) must still have a small amount of freedom to move and rotate within the main module housing (4).

❸ While firmly holding down the cap (2), use a 5 mm Allen tool to loosen the socket head cap retaining screw (1). The cap retaining screw will not fully disengage from the piston cap due to the adjustment mass (3). Gently remove the cap and screw from the assembly.

Note

When installing the piston cap during reassembly, remember to reinstall the adjustment mass (3).

❹ Remove the main module housing (4) by sliding it upward leaving the piston-cylinder and sleeve assembly behind.

❺ Reinstall the piston cap (2) directly onto the piston head (6). Using the cap as a handle, slide the piston out of the cylinder. Take care not to cock the piston in the cylinder at the point at which it leaves the cylinder.

❻ Turn over the cylinder sleeve (7) so that the sleeve nut (10) is facing up.

∠ Using the sleeve nut tool (see Figure 16), remove the sleeve nut (5). The sleeve nut tool is a spanner that fits into the two holes on the sleeve nut.

Note

The 50, 100 and 200 kPa/kg sleeve nuts have a right hand thread so they are loosened by turning counter-clockwise.

❽ Holding the cylinder (9) in the open end of the cylinder sleeve (7), turn the cylinder sleeve over and then allow the cylinder to gently slide out.

Note

In reassembly, verify that the cylinder O-ring (8) is still located in the top of the cylinder sleeve (7). It is recommended that a thin film of vacuum grease (Krytox®) be applied to the top outside edge of the cylinder sleeve (7) where it mates with the main module housing (4). This must be applied before the sleeve is inserted into the housing. The end of the cylinder marked with the serial number must enter the main module housing first.

⚠ Caution

- **The two sleeve retaining screws (5) MUST be reinstalled before pressure is applied to the piston-cylinder module. Damage to equipment and injury to personnel may result from pressurizing the piston-cylinder module without the sleeve retaining screws installed.**
- **The orientation of the piston on the cylinder is important. The end of the cylinder that is marked with the serial number should go into the sleeve and/or main module housing first. The piston enters the end of the cylinder that is marked with the serial number. Installing the cylinder with the wrong orientation may lead to out of tolerance measurements.**

© 2011 Fluke Calibration

원문: Fluke Calibration PG7302 메뉴얼(영문) · 제조사 원문 자료입니다. 사양은 제조사 사정에 따라 변경될 수 있습니다.

we measure, we calibrate, we validate.
KOLAS 국제공인교정기관 · ISO/IEC 17025
㈜테솔 · www.tessol.com TS-TL-FLK-093 187 / 214

TS-TL-FLK-093

5.3.2.2 Disassembly And Reassembly of Gas Operated, Liquid Lubricated Piston-Cylinder Modules (PC-7200)

⚠ Caution

- **The PG7000 piston-cylinder module design affords maximum protection to the piston-cylinder element assuring that it is protected during routine piston-cylinder handling. Cleaning the piston-cylinder requires disassembly of the module and exposure of the piston-cylinder to possible damage. These risks include damage to the critical working surfaces for all piston-cylinder sizes and chipping or breaking, especially for small diameter piston-cylinders. Only qualified personnel should undertake piston-cylinder disassembly, cleaning and reassembly. The instructions and recommendations contained in this manual should be followed carefully throughout the operation.**
- **NEVER touch the lapped surfaces (polished appearance) of the piston or cylinder with your bare hands. Body oils and acids can permanently etch the surfaces.**
- **In normal use, always maintain PC-7200 gas operated, liquid lubricated piston-cylinder modules vertical with the O-ring assembly down. Tilting or inverting the assembly can cause the liquid in the modules reservoir to run out. Inverting the assembly can allow liquid to run up into the piston head into the adjustment mass and cap. Liquid contamination of the piston head and cap changes the mass of the piston assembly and could lead to out of tolerance pressure definitions at low mass loads. If liquid contaminates the adjustment mass and cap, disassemble the module and clean it (see Section 5.3).**

원문: Fluke Calibration PG7302 메뉴얼(영문) · 제조사 원문 자료입니다. 사양은 제조사 사정에 따라 변경될 수 있습니다.

we measure, we calibrate, we validate.
㈜테솔 · www.tessol.com TS-TL-FLK-093 188 / 214
KOLAS 국제공인교정기관 · ISO/IEC 17025

TS-TL-FLK-093

All Gas Operated, Liquid Lubricated Piston-Cylinder Modules

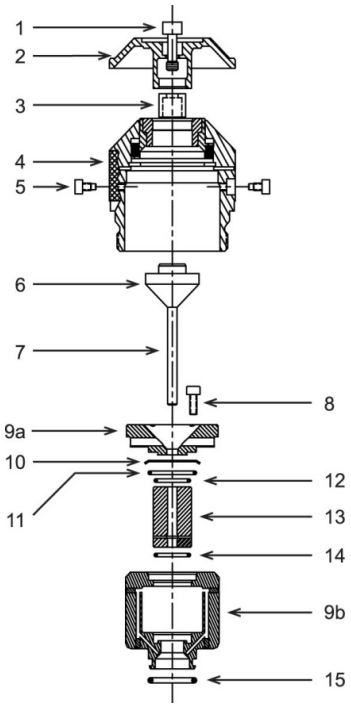

Figure 18. Gas Operated, Liquid Lubricated Piston-Cylinder Module (Expanded View)

Note

- **Before disassembling a gas operated, liquid lubricated piston-cylinder module, empty the lubricating liquid reservoir (see Section 5.3.3). After reassembling, fill the reservoir before using the piston-cylinder module again.**
- **Gas operated, liquid lubricated piston-cylinders can usually be cleaned by simply removing the piston, cleaning it and running it in and out of the cylinder several times. Do not completely disassemble the piston-cylinder module beyond removing the piston (step ❸) unless it is absolutely necessary.**

❶ Screw the piston-cylinder module into the base of its bullet case (Acetal shipping and storage case) and place the base and module on a clean stable surface with the piston cap (2) up.

❷ Using a 3 mm Allen tool, loosen the two socket head sleeve retaining screws (5) from the opposing sides of the main module housing (4).

Note

In reassembly, after the two sleeve retaining screws (5) are installed, the sleeve (9) must still have a small amount of freedom to move and rotate within the main module housing (4).

❸ While firmly holding down the cap (2), use a 5 mm Allen tool, to loosen the socket head cap retaining screw (1). Turning the screw (1) pushes the piston head (6) straight out of the piston cap (2) ensuring that no sideways torque is applied to the piston (7). The cap retaining screw will not fully disengage from the piston cap due to the adjustment mass (3). Gently remove the cap and screw from the assembly. Take care to be sure the piston head is out of the cap so as NOT to apply torque to the piston (7) when removing the cap.

Note

In reassembly, when installing the piston cap, be sure the adjustment mass (3) is still in place on the screw. Take great care to slip piston cap (2) straight onto the piston head (6) and not to apply torque to the piston (7).

❹ Unscrew the main module housing (4) from the bullet case leaving the piston-cylinder and sleeve assembly behind in the bullet case base. Holding piston head (6) and taking care not to apply sideways torque on the piston (7), slide the piston **straight** out of the cylinder (13).

Note

- **Stop here if you are doing a simple cleaning of the piston-cylinder (see Section 5.3.4). Do not proceed with this step of disassembly if you do NOT have a new set of O-rings (11, 12, 14) to use in reassembly. It is imperative that new O-rings be used in reassembly.**
- **Using a 3 mm Allen tool, unscrew and remove the four reservoir cover retaining screws (8). Lift off the reservoir cover (9a). The small O-ring (12) stays with the reservoir cover. Remove the large O-ring (11) and its anti-extrusion ring (10) taking care not to deform the extrusion ring (PC-7200-100 and PC-7200-200 do not have an anti-extrusion ring). Note: Anti-extrusion ring needs to be installed with beveled edge facing down.**

❺ Remove the reservoir assembly with the cylinder in it from the bullet case base. Turn over the assembly and place it on the sturdy surface with the bottom O-ring (15) up.

❻ Push the cylinder (13) out of the reservoir through the hole in the bottom of the reservoir and remove it. Remove the small O-ring (14) from the bottom of the reservoir.

⚠ Caution

- **The sleeve retaining screws (5) MUST be reinstalled before pressure is applied to the piston-cylinder module. Damage to equipment and injury to personnel may result from pressurizing the piston-cylinder module without the sleeve retaining screws installed.**
- **The orientation of the piston on the cylinder is important. The end of the cylinder that is marked with the serial number should go into the sleeve and/or main module housing first. The piston enters the end of the cylinder that is marked with the serial number. Installing the cylinder with the wrong orientation may lead to out of tolerance measurements.**

© 2010 Fluke Calibration

원문: Fluke Calibration PG7302 메뉴얼(영문) · 제조사 원문 자료입니다. 사양은 제조사 사정에 따라 변경될 수 있습니다.

TESSOL Technical Library
TS-TL-FLK-093
we measure, we calibrate, we validate.
㈜테솔 · www.tessol.com TS-TL-FLK-093 189 / 214
KOLAS 국제공인교정기관 · ISO/IEC 17025

5.3.2.3 Disassembly and Reassembly of Oil Operated, Oil Lubricated Piston-Cylinder Modules (PC-7300)

⚠ Caution

- **The PG7000 piston-cylinder module design affords maximum protection to the piston-cylinder element ensuring that it is protected during routine piston-cylinder handling. Cleaning the piston-cylinder requires disassembly of the module and exposure of the piston-cylinder to possible damage. These risks include damage to the critical working surfaces and chipping or breaking, especially for small diameter pistons, in particular the PC-7300 5 MPa/kg. Only qualified personnel should undertake piston-cylinder disassembly, cleaning and reassembly. The instructions and recommendations contained in this manual should be followed carefully throughout the operation.**
- **NEVER touch the lapped surfaces (polished appearance) of the piston or cylinder with your bare hands. Body oils and acids can permanently etch the surfaces.**
- **In normal use, always maintain PG7302 oil piston-cylinders vertical with the O-ring assembly down. Do not invert the assembly and allow oil to run up into the piston head into the adjustment mass and cap. Oil contamination of the piston head and cap changes the mass of the piston assembly and could lead to out of tolerance pressure definitions at low mass loads. If oil contaminates the adjustment mass and cap, disassemble the module and clean it (see Section 5.3).**

원문: Fluke Calibration PG7302 메뉴얼(영문) · 제조사 원문 자료입니다. 사양은 제조사 사정에 따라 변경될 수 있습니다.

All Oil Operated Piston-Cylinder Module

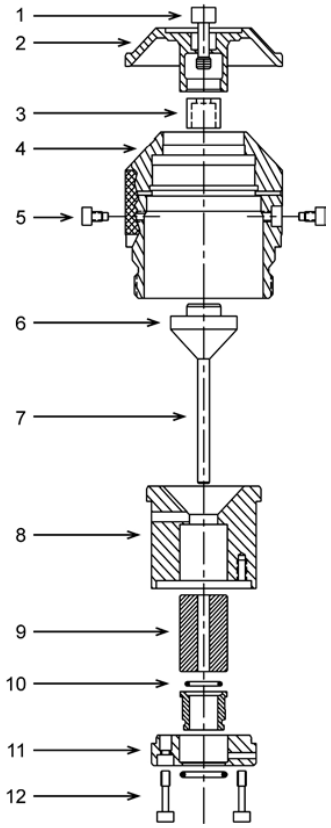

Figure 19. Oil
Piston-Cylinder Module (Expanded View)

❶ Screw the piston-cylinder module into the base of its bullet case (Acetal shipping and storage case) and place the base and module on a clean stable surface with the piston cap up.

❷ Using a 3 mm Allen tool, loosen the two socket head sleeve retaining screws (5) from the opposing sides of the main module housing (4).

Note

In reassembly, after the two sleeve retaining screws (5) are installed, the sleeve (8) must still have a small amount of freedom to move and rotate within the main module housing (4).

❸ While firmly holding down the cap (2), use a 5 mm Allen tool, to loosen the socket head cap retaining screw (1). Turning the screw pushes the piston head (6) straight out of the piston cap (2) ensuring that no sideways force is applied to the piston (7). **NOTE: Small diameter pistons can be snapped by excessive sideways force.** The cap retaining screw will not fully disengage from the piston cap due to the adjustment mass (3).

Gently remove the cap and screw from the assembly. Use caution to be sure the piston head is out of the cap so as NOT to apply sideways force to the piston (7) when removing the cap.

Note

When installing the piston cap during reassembly, remember to reinstall the adjustment mass (3). Take great care to slip the piston cap (2) straight onto the piston head (6) and not to apply torque to the piston (7).

❹ Unscrew the main module housing (4) from the bullet case leaving the piston-cylinder and sleeve assembly behind in the bullet case base. Carefully reinstall the piston cap (2) onto the piston head (6) taking care not to apply sideways torque on the piston (7). Using the cap as a handle, slide the piston **straight** out of the cylinder. **NOTE: Do not twist the piston or apply sideways force to it. It can easily be snapped.**

❺ Remove the cylinder and sleeve assembly from the bullet case base. Turn over the assembly and place it on the sturdy surface with the O-ring assembly (10) up.

❻ Using a 3 mm Allen tool, loosen the two O-ring assembly retainer screws (12). The screws are captive so they will not disengage completely. Remove the O-ring retainer (11) with the retainer screws. Remove the O-ring assembly (10).

Note

There are low pressure and high pressure oil piston-cylinder modules, which are identical except for the size of the O-ring assembly. The low pressure assembly has a large, single diameter and is shorter (see ⚠ below). In reassembly, take care to ensure that a low pressure O-ring assembly is never installed on a high pressure module as excessive force and damage under pressure could result.

❼ Holding the cylinder (9) in the open end of the cylinder sleeve (8), turn the cylinder sleeve over. Allow the cylinder to gently slide out. The end of the cylinder marked with the serial number must enter the module housing first.

⚠ Caution

- **Before reinstalling the piston in the cylinder, make sure that the piston is lubricated with a light film of oil .**
- **The sleeve retaining screws (5) MUST be reinstalled before pressure is applied to the piston-cylinder module. Damage to equipment and injury to personnel may result from pressurizing the piston-cylinder module without the sleeve retaining screws installed.**

Continued on next page --->

© 2010 Fluke Calibration

원문: Fluke Calibration PG7302 메뉴얼(영문) · 제조사 원문 자료입니다. 사양은 제조사 사정에 따라 변경될 수 있습니다.

we measure, we calibrate, we validate.
KOLAS 국제공인교정기관 · ISO/IEC 17025

⚠ Caution

NEVER install a low pressure O-ring assembly (11 in Figure 14) on a high pressure oil piston-cylinder module. High pressure piston-cylinder modules are PC-7300-1, -2 and -5. The low pressure O-ring assembly has a single diameter and is shorter than a high pressure O-ring assembly. Operating a high pressure oil piston-cylinder module with a low pressure O-ring assembly installed could cause excessive force and damage the module.

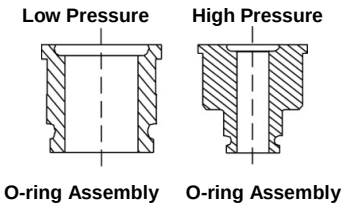

⚠ Caution

The orientation of the piston on the cylinder is important. The end of the cylinder that is marked with the serial number should go into the sleeve and/or main module housing first. The piston enters the end of the cylinder that is marked with the serial number. Installing the cylinder with the wrong orientation may lead to out of tolerance measurements.

5.3.3 Filling or Emptying Gas Operated, Liquid Lubricated Piston-Cylinder Module Reservoir with Liquid

❍ PURPOSE

To fill or empty the reservoir that holds the liquid used to lubricate the piston-cylinder gap in PC-7200 piston-cylinder modules.

❍ PRINCIPLE

PC-7200 gas operated, liquid lubricated piston-cylinder modules include a reservoir, which holds the liquid used to lubricate the gap between the piston and the cylinder (see Figure 3.1.1). If this reservoir is allowed to go empty, the piston-cylinder module will not operate properly. Symptoms of lack of lubricating liquid are poor piston sensitivity, excessive piston drop rate and/or excessive rotation decay rate.

To avoid running out of lubricating liquid, it is recommended that the piston-cylinder module liquid reservoir be refilled approximately once a week when the module is being used extensively or if the module has not been used for an extended period of time.

The reservoir may also be emptied for shipping or disassembly.

❍ OPERATION

To fill the reservoir of a PC-7200 gas operated, liquid lubricated piston-cylinder module, proceed as follows (see Figure 5.3.3). To empty the reservoir, uses steps ❶ and ❷ only.

❶ Place the piston-cylinder module horizontally with one of the liquid fill holes facing up. Some liquid may come out of the hole. This indicates that the reservoir is not empty.

❷ Use a syringe supplied with the piston-cylinder module. Empty the syringe and insert it snugly into the fill hole. Draw back the syringe plunger and withdraw the remaining liquid from the reservoir until air begins to enter the syringe.

❸ Dispose of the contents of the syringe and wipe off any liquid residue in the bottom of the module and around the fill hole.

❹ Fill the syringe with 8 cc of fresh liquid. With the piston-cylinder module still in the horizontal position, inject the full 8 cc of liquid into the fill hole. Be sure to use the correct fluid for the piston-cylinder module (PC-7200-100, -200 and use Synturion 6; PC-7200-500, -1 and -2 use Sebacate, see Section 1.2.2.2).

❺ Simultaneously, remove the syringe and hold the module in the vertical position. Let any liquids run off and wipe off the inside bottom of the module, if necessary, with a lint free wipe. The module is ready to be reinstalled in the PG7202 Platform (see Section 2.3.2).

원문: Fluke Calibration PG7302 메뉴얼(영문) · 제조사 원문 자료입니다. 사양은 제조사 사정에 따라 변경될 수 있습니다.

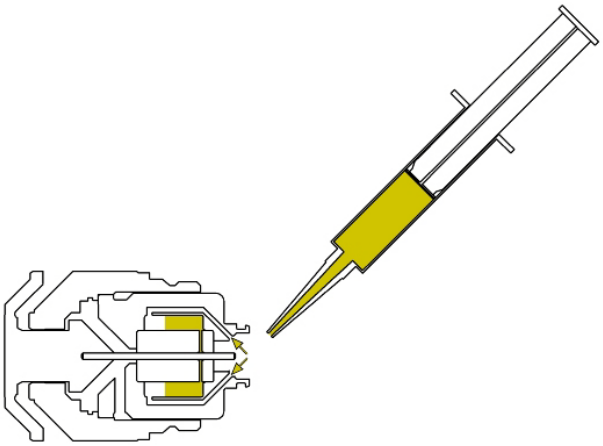

Figure 20. Filling Gas Operated, Liquid Lubricated Piston-Cylinder Module Reservoir (PC-7200)

Note

- **When refilling piston-cylinder modules, if the quantity of liquid withdrawn in step ❷ above is less than 2 cc, you should fill the module more frequently.**
- **In day to day use, always keep gas operated, liquid lubricated modules in the vertical position when handling them to avoid having liquid escape from the fill holes.**

5.3.4 Cleaning Piston-Cylinders

Water/Detergent Method

Note

Of the two cleaning methods, the water/detergent method is more time consuming but it is also more thorough.

⚠ Caution

DO NOT undertake piston-cylinder module disassembly without familiarizing yourself with Section 5.3.1 of this manual. Incorrect disassembly may damage or destroy the piston-cylinder element.

❶ Disassemble the piston-cylinder module following the instructions given in Section 5.3.2.1 for PC-7100/7600 modules, Section or Section 5.3.2.2 for PC-7200 modules or Section 5.3.2.3 for PC-7300 modules.

❷ Reinsert the piston (with cap installed) into the cylinder.

❸ Create a bath of water and mild liquid dishwashing detergent. Distilled water is acceptable. De-ionized water is best. Detergent must be free of additives (i.e., lotions or softening agents which may leave a residue after cleaning). To avoid undesired thermal effects, bring the bath to room temperature.

❹ Holding the piston-cylinder assembly by the outside of the cylinder and the piston cap, submerge the assembly in the bath. Using a rotating motion, thoroughly work the detergent into the piston-cylinder assembly.

❺ With the piston-cylinder still assembled, thoroughly rinse the assembly in a bath of water only. Use the same rotating motion as in the previous step.

© 2011 Fluke Calibration

원문: Fluke Calibration PG7302 메뉴얼(영문) · 제조사 원문 자료입니다. 사양은 제조사 사정에 따라 변경될 수 있습니다.

we measure, we calibrate, we validate.
㈜테솔 · www.tessol.com TS-TL-FLK-093 193 / 214
KOLAS 국제공인교정기관 · ISO/IEC 17025

TESSOL Technical Library
TS-TL-FLK-093

❻ Remove the piston from the cylinder and thoroughly dry all areas of the assembly using a lint free towel. DO NOT touch the critical lapped surfaces of the piston or the cylinder with anything other than the drying towel. Only use one side of the towel during this process as the other side will become contaminated by contact with the operator's hands. Dry thoroughly.

❼ Reassemble the metrological assembly in reverse order.

❽ If the assembly temperature was elevated during cleaning, it may be necessary to wait to allow the temperature of the assembly to return to ambient temperature before the assembly will operate normally.

Note

To avoid static build up on the 35 mm ceramic piston surface, do not excessively rub or buff the surface after it has been dried. After cleaning ceramic elements, it is recommended that they be discharged to remove any possibility of static charge. This can be accomplished by running a clean, grounded wire (typically from an ESD pad) across the inner and outer surfaces of the piston and cylinder.

Quick Method

Note

Of the two cleaning methods, the quick method is less demanding but it is less thorough.

⚠ Caution

DO NOT undertake piston-cylinder module disassembly without familiarizing yourself with Section 5.3.1 of this manual. Incorrect disassembly may damage or destroy the piston-cylinder element.

❶ Disassemble the piston-cylinder module following the instructions given in Section 5.3.2.1 for PC-7100/7600 modules, Section or Section 5.3.2.2 for PC-7200 modules or Section 5.3.2.3 for PC-7300 modules. Note, it is frequently adequate to clean only the piston of PC-7200 and PC-7300 modules which avoids complete disassembly of the module.

❷ If you have not already done so, reinstall the cap on the piston.

❸ Apply a small amount of Dow Corning® OS-20 or glass cleaner to a lint free wipe. If glass cleaner is used, slightly dilute the cleaner using distilled or de-ionized water to help ensure that no residue will be left behind. Wipe the lapped surfaces (polished appearance) of both the piston and cylinder.

❹ Using a separate, clean, lint free wipe, wipe the surfaces again to remove any remaining moisture. If canned air is available, blow the surfaces off with a **slow** flow of air.

❺ Reassemble the piston-cylinder assembly in reverse order.

Note

To avoid static build up on the 35 mm ceramic piston surface, do not excessively rub or buff the surface after it has been dried. After cleaning ceramic piston, it is recommended that it be discharged to remove any possibility of static charge. This can be accomplished by running a clean, grounded wire (typically from an ESD pad) across the inner and outer surfaces of the piston and cylinder.

원문: Fluke Calibration PG7302 메뉴얼(영문) · 제조사 원문 자료입니다. 사양은 제조사 사정에 따라 변경될 수 있습니다.

TS-TL-FLK-093

we measure, we calibrate, we validate.
㈜테솔 · www.tessol.com TS-TL-FLK-093 194 / 214
KOLAS 국제공인교정기관 · ISO/IEC 17025

5.3.5 Lubricating Piston-Cylinder Modules

The purpose of piston-cylinder module lubrication is to minimize wear to components of the piston-cylinder module. The proper long term functioning of the module requires that specific areas of certain components be properly lubricated, especially after they have been cleaned.

Lubricant

Vacuum Grease: DuPont Krytox GPL-205/6 is the recommended lubricant. Krytox is selected because it is a non-reactive, nonflammable, oxygen service safe grease. Very small amounts are used. Krytox is made of perfluoropolyether (PFPE) thickened with polytetrafluoroethylene (PTFE). Users should avoid contact with eyes and skin.

A tube of Krytox GPL-205/6 is included in the PG7000 Platform accessory kit.

Where to Lubricate

The lubrication charts in Figures 21, 22 and 23 depict the areas that require application of vacuum grease. A thin film (i.e. just enough lubricant to fully cover the area indicated) applied to these areas is all that is necessary. Lubrication with more than a thin film will increase the cost of lubrication and may result in contamination of the piston and/or cylinder. Areas not indicated for lubrication should be kept free from vacuum grease.

Lubricating O-Rings

O-rings identified for lubrication should be lubricated prior to installation. During service O-rings may be left in place and a thin film of vacuum grease applied to the outside diameter. Vacuum grease may be applied by placing a drop (3-4mm diameter - approximately 15-30mg) of grease between the thumb and forefinger and then rolling the O-ring between the thumb and forefinger to apply a thin film over the entire o-ring (use of gloves is recommended). An alternate method is to place a drop (3-4mm diameter - approximately 15-30mg) of vacuum grease in a small zip closure plastic bag (just large enough to fit the largest O-ring). Place the O-ring in the bag, close the bag, and then gently work the vacuum grease over the entire O-ring.

Spring Carrier Lubrication

The spring carrier is lubricated at Fluke Calibration. Under normal conditions it is not necessary for the user to remove the spring carrier for lubrication. In the event that lubrication is necessary, use caution during disassembly. Remove the clip, spacer, spring carrier and springs (qty 6). Lubricate the spring carrier as shown in the lubrication chart. Reassemble, using care to install the springs, spacer and clip in the reverse order of disassembly.

Pistons and Cylinders

Pistons and cylinders should be kept free from vacuum grease and any other contaminant (see Section 5.3.4). Vacuum grease or other contaminants on the piston or cylinder will adversely affect the piston-cylinder module's performance.

© 2011 Fluke Calibration

원문: Fluke Calibration PG7302 메뉴얼(영문) · 제조사 원문 자료입니다. 사양은 제조사 사정에 따라 변경될 수 있습니다.

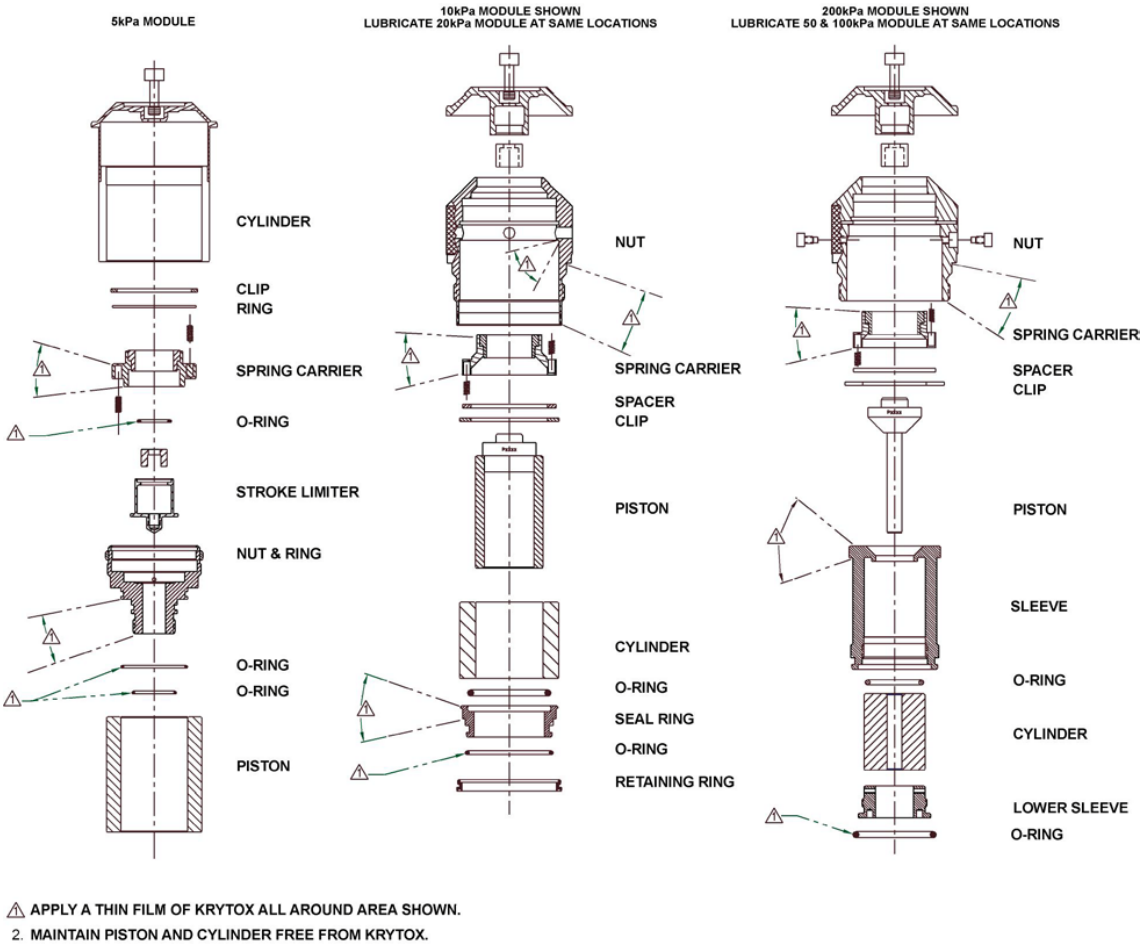

Figure 21. Gas Operated, Gas Lubricated Piston-Cylinder Module Lubrication Chart

원문: Fluke Calibration PG7302 메뉴얼(영문) · 제조사 원문 자료입니다. 사양은 제조사 사정에 따라 변경될 수 있습니다.

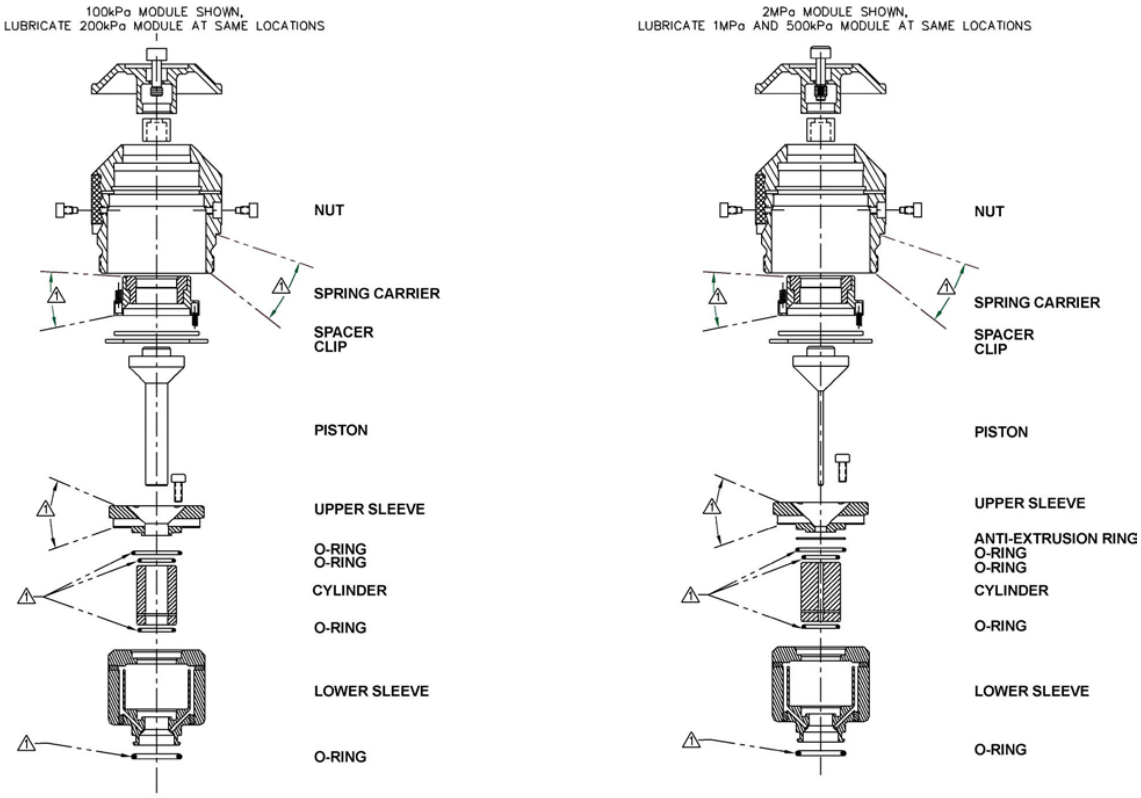

1. APPLY A THIN FILM OF KRYTOX ALL AROUND AREA SHOWN.
2. MAINTAIN PISTON AND CYLINDER FREE FROM KRYTOX.

Figure 22. Gas Operated, Liquid Lubricated Piston-Cylinder Module Lubrication Chart

© 2011 Fluke Calibration

원문: Fluke Calibration PG7302 메뉴얼(영문) · 제조사 원문 자료입니다. 사양은 제조사 사정에 따라 변경될 수 있습니다.

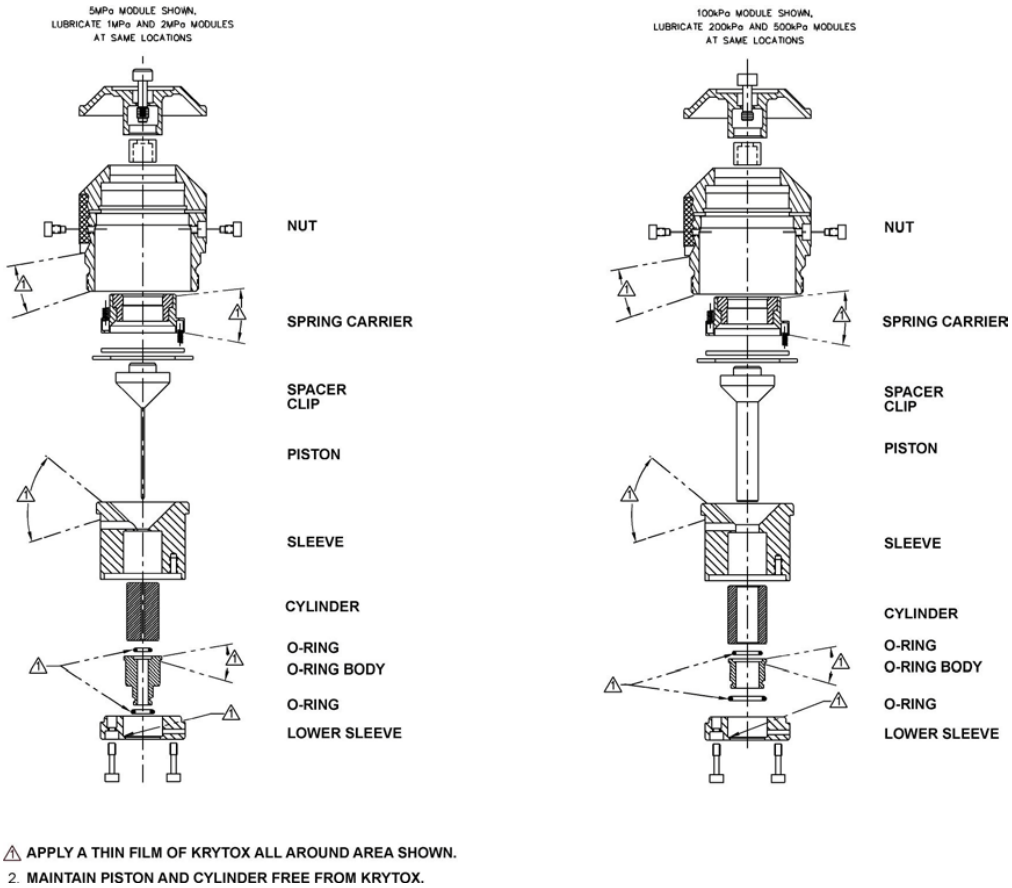

Figure 23. Oil Operated Piston-Cylinder Module Lubrication Chart

5.3.6 Recalibration

❍ **PRINCIPLE**

Piston-cylinders and mass sets are recalibrated by redetermining the effective area of the piston-cylinder and the true mass values of the masses. It is recommended that piston-cylinders and mass sets be recalibrated at the end of their first and second years of operation. Then, based on their observed stability, a longer calibration interval can usually be assigned. Though other organizations may be able to perform these calibrations, it is recommended that a Fluke Calibration Service be used, if possible.

The recalibration process may find values for piston-cylinder effective area, pressure coefficient and mass values that are different from the previous values. The PG7000 piston-cylinder and/or mass set files must be changed to reflect the new values (see Sections 5.3.2.1 and 5.4.2.1).

5.3.6.1 updating piston-cylinder module files

See Section 3.11.1.2 for information on editing a piston-cylinder module file to reflect new calibration data.

원문: Fluke Calibration PG7302 메뉴얼(영문) · 제조사 원문 자료입니다. 사양은 제조사 사정에 따라 변경될 수 있습니다.

5.4 Mass Sets

5.4.1 Cleaning

Care should always be taken with all PG7000 masses, including the piston assembly and the mass loading bell, to avoid contaminating them with liquids or particles. They should never be handled with bare hands.

Over time, or by an accidental incident, masses may become soiled. In these cases, they can be cleaned.

Masses should be cleaned with a non-abrasive general purpose cleaner (such as glass cleaner) and wiped dry with lint free paper towels.

5.4.2 Recalibration

❍ **PRINCIPLE**

Piston-cylinders and mass sets are recalibrated by redetermining the effective area of the piston-cylinder and the true mass values of the masses. It is recommended that piston-cylinders and mass sets be recalibrated at the end of their first and second years of operation. Then, based on their observed stability, a longer calibration interval may be assigned. Though other organizations may be able to perform these calibrations, it is recommended that a Fluke Calibration Service be used, if possible.

The recalibration process may find values for piston-cylinder effective area, pressure coefficient and mass values that are different from the previous values. The PG7000 piston-cylinder and/or mass set files must be changed to reflect the new values (see Sections 5.3.2.1 and 5.4.2.1).

5.4.2.1 Updating Mass Set Files

See Sections 3.11.1.7 and 3.11.1.12 for information on editing mass set and mass loading bell files to reflect new calibration data. The mass of the piston assembly is included in the piston-cylinder module file (see Section 3.11.1.2).

5.5 Reloading Embedded Software into PG7000 Flash Memory

PG7000 uses FLASH memory. This allows the embedded software that controls PG7000 operations and functions to be loaded into PG7000 over its COM1 port from a computer with a simple FLASH loading utility program.

Note

Previous versions of PG7000 embedded software required the use of a NULL MODEM cable to flash via the COM2 port. Version 3.0 and newer use a different scheme requiring only a traditional cross-over RS232 cable and flashes on the COM1 port.

To replace corrupted software or upgrade your software, access the Fluke Calibration worldwide web site at **www.dhinstruments.com** and go to **embedded** located under **software**. A Flash loading utility and the latest PG7000 software are available for download at no charge. If you do not have access to the web or have difficulty downloading or loading software, contact your Fluke Calibration representative or a Fluke Calibration Authorized Service Provider for assistance.

If you believe you have discovered an error or “bug” in PG7000 software, please report it with complete details by email to dhiservice@fluke.com or submit an on-line **Quality Feedback Report** at **www.dhinstruments.com**.

© 2011 Fluke Calibration

원문: Fluke Calibration PG7302 메뉴얼(영문) · 제조사 원문 자료입니다. 사양은 제조사 사정에 따라 변경될 수 있습니다.

we measure, we calibrate, we validate.
㈜테솔 · www.tessol.com TS-TL-FLK-093 199 / 214
KOLAS 국제공인교정기관 · ISO/IEC 17025

TESSOL Technical Library
TS-TL-FLK-093

Note

The Fluke Calibration flash software loading utility and PG7000 embedded software are available for download from the SOFTWARE section of DHI's worldwide web site at www.dhinstruments.com.

5.6 Disassembly and Reassembly of PG7000

5.6.1 Platform

See Section 5.2.1.5, Mounting Post PRT Removal.

5.6.2 Terminal

To open the PG7000 Terminal proceed as follows:

❶ Disconnect power.

❷ Remove the pop-off screw covers on the bottom of the case.

❸ Remove the four case screws.

❹ Lift OFF the cover. Be careful not to over stress the ribbon cables connecting the display and keypad in the cover to the printed circuit board in the base.

❺ Disconnect the cover to base ribbon cables at the connectors on the base printed circuit board. Be aware that the connectors are locking connectors.

❻ To reassemble, proceed in reverse order.

5.6.3 AMH Automated Mass Handler Removal

See the AMH-38/AMH-100 Operation and Maintenance Manual.

원문: Fluke Calibration PG7302 메뉴얼(영문) · 제조사 원문 자료입니다. 사양은 제조사 사정에 따라 변경될 수 있습니다.

TS-TL-FLK-093

we measure, we calibrate, we validate.
㈜테솔 · www.tessol.com TS-TL-FLK-093 200 / 214
KOLAS 국제공인교정기관 · ISO/IEC 17025

6. Troubleshooting

6.1 Overview

PG7000 is a sophisticated pressure measuring instrument with advanced on-board features and functions. Before assuming that unexpected behavior is caused by a system defect or breakdown, the operator should use this manual and other training facilities to become thoroughly familiar with PG7000 operation. This troubleshooting guide is intended as an aid in identifying the cause of unexpected PG7000 behavior and determining whether the behavior is due to normal operation or an internal or external problem.

Identify the symptom or unexpected behavior you are observing from the **SYMPTOM** list below. A **PROBABLE CAUSE** is provided and a **SOLUTION** is proposed including references to manual sections that provide information that may be of assistance.

See the AMH-38/AMH-100 Operation and Maintenance Manual for troubleshooting the operation of an AMH automated mass handler.

Table 29. PG7000 Troubleshooting Checklist

SYMPTOM	PROBABLE CAUSE	SOLUTION
Will NOT power up.	Blown fuse.	Replace fuse in PG7000 Terminal.
Front panel keys seem to be disabled.	“REMOTE” command has been sent from a host computer.	Send “LOCAL” command from host computer or cycle PG7000 power. 4.3.4.2
Front panel display is dim.	Screen saver option has been activated.	Press any key to resume full screen power, adjust activation time if desired. 3.11.4.1
Keypad presses make undesired sounds or no sounds.	Keypad sound settings are incorrect.	Use sounds function to set keypad sounds as desired. 3.11.42
Cannot access certain functions. Display shows: <ACCESS RESTRICTED>.	User Level setting restricts access to those functions.	Change User Level or consult system manager. 3.11.8
Cannot establish communication over interface.	Computer and/or PG7000 interface not correctly configured; incorrect or bad interface cable.	Check and correct interface configurations and cables if necessary. Run COM port test. 3.11.5, 3.11.5.3, 4.2
Displays <FATAL ERROR> or <FATAL FAULT>.	Encountered unresolved internal software conflict.	Cycle power to clear. Please record conditions leading up to the event, including the numbers displayed when enter is pressed and report the information to a Fluke Calibration Authorized Service Provider.
Display <TOUT> or <TIME-OUT>.	PG7000 is having a communications problem with an external barometer or pressure generation/control component.	Check setup and communications with external barometer or pressure generation/control component. 3.11.5.4
Displays <******> or <OVERFLOW> where a numerical value should be.	Number to be displayed is too large for allocated space. Usually due to an erroneous setting or measurement causing an out of limit high value to be calculated.	Check settings that may be causing an out of limit high measurement and adjust if necessary. 3.9.3
The PG Terminal constantly displays <Searching …. >.	The PG Terminal is unable to establish communications with the PG7000 Platform.	Check that the PG Terminal to Platform cable is installed correctly. If still unable to get beyond <Searching …. >, contact a Fluke Calibration Authorized Service Provider. 2.3.1.1
The run screen is not the normal MAIN run screen.	You are in the SYSTEM or AMBIENT run screen.	Operation is normal. Press [ESCAPE] 3.8

 © 2010 Fluke Calibration

원문: Fluke Calibration PG7302 메뉴얼(영문) · 제조사 원문 자료입니다. 사양은 제조사 사정에 따라 변경될 수 있습니다.

SYMPTOM	PROBABLE CAUSE	SOLUTION
Displays of ambient conditions values are not accurate.	The reference to which the ambient condition values are being compared is not accurate or the specifications of the ambient conditions sensors are not being evaluated correctly.	Check the specifications and operation of the reference being used for ambient conditions. Consider the specifications of the ambient conditions measurements. 1.2.1.2
On power up, PG Terminal displays <RH Sensor ERR#xx> or PRT or RH field displays flashing <ERR>	TH Probe is not connected	Turn power off. Check TH Probe connection. Turn power on. 2.3.1.1
Piston drop rate is excessive.	There is a leak in the pressurized system or the device under test itself.	Correct leak.
Piston drop rate is excessive (PG7202).	Liquid lubrication reservoir is empty and gas is escaping through piston-cylinder gap.	Refill piston-cylinder liquid lubrication reservoir. 5.3.3
Piston rotation rate decay is excessive (PG7202).	Liquid lubrication reservoir is empty so piston-cylinder gap is not properly lubricated.	Refill piston-cylinder liquid lubrication reservoir. 5.3.3
Piston rotation rate decay rate is excessive.	Piston position detection is out of adjustment is piston is in spring zone, not floating freely.	Adjust piston position detection. 5.2.2
Motorized rotation will not engage.	Motorized rotation system recovering from overload or measurement made is absolute by vacuum and reference vacuum is not under ready limit.	Wait 25 seconds for system to recover. 3.9.13, 3.9.8
Automated motorized rotation is not operating.	Automated motorized rotation is OFF.	Press [ROTATE]. 3.9.8
Manually activated motorized rotation cutoff while the [↻] was still pressed.	Motorized rotation has overloaded or maximum rotation rate was reached.	Operation is normal. Wait 25 seconds for system to recover from overload or wait until rotation rate is below maximum. .9.8
Automated motorized rotation is not engaging even though rotation rate is less than minimum *Ready* rotation rate.	Current mass load is under cutoff load of 3 kg.	Operation is normal. 3.4.2
Motorized rotation unable to start piston rotation.	Piston-cylinder dirty.	Clean piston-cylinder. 5.3.1
The piston deceleration function starts immediately when **[ENTER/SET P]** is pressed.	Operation is normal but can be modified so that deceleration does not occur if it is not needed.	Turn off the PRE-DECEL function. 3.9.8.1
Piston rotation rate slows down too quickly; motorized rotation engages too frequently.	Piston-cylinder dirty, PG7000 Platform not level, PG7000 subjected to excessive vibration.	Clean piston-cylinder, level PG7000 Platform, adjust piston position indication, remove sources of vibration. 2.3.1.1, 5.2.2, 5.3.1
	Piston position indication is not properly calibrated and piston is not floating when rotation engages.	Calibrate piston position indication system. 5.2.2
The mass value loading instruction resulting from a pressure entry and the mass value displayed in the MAIN run screen are not the same.	Mass entries are in nominal mass and MAIN run screen displays actual mass.	Operation is normal. Familiarize yourself with PG7000 mass protocol. 3.6
The resolution of mass loading instructions doesn't seem correct.	The mass loading resolution setting is set incorrectly.	Use [RES] to set mass loading resolution as desired. 3.9.10
Piston position readings seem incorrect.	Piston position reading system needs to be adjusted; mass bell is not loaded so piston position indication is not operating.	Execute piston position reading adjustment procedure, load mass bell. 5.2.2
Pressure defined by PG7000 is grossly incorrect.	Active piston-cylinder module and/or mass set are not those that are in use, the correct mass value is not loaded.	Select correct piston-cylinder module and mass set; check mass load accounting. 3.6, 3.9.2, 3.11.1.10

원문: Fluke Calibration PG7302 메뉴얼(영문) · 제조사 원문 자료입니다. 사양은 제조사 사정에 따라 변경될 수 있습니다.

SYMPTOM	PROBABLE CAUSE	SOLUTION
Pressure defined by PG7000 is incorrect by roughly 100 kPa (14.5 psi).	PG7000 is in absolute measurement mode when it should be in gauge measurement mode or vice-versa.	Use [MODE] to select correct measurement mode. 3.9.4
Pressure defined by PG7000 is incorrect by relatively small amounts.	A pressure head is applied incorrectly or inadvertently, the value of gravity used by the SETUP file is incorrect, the PG7000 Platform is not level, information in the piston-cylinder module and/or mass set file is incorrect.	Check and correct if necessary. 3.9.7, 3.10, 2.4.11, 3.11.1
Pressure defined by PG7000 is incorrect.	Piston is in spring zone although piston position indicates it is floating freely.	Adjust piston position measurement system. 5.2.2
Cannot set a hydraulic pressure >110 MPa (16 000 psi) with PG7202.	PG7202 believes a gas piston-cylinder (PC-7200-x) is in operation and gas piston-cylinder modules cannot be used above 110 MPa (16 000 psi).	Install and select an oil (PC-7300-x) piston-cylinder.
When using automated pressure control pressure generation stopped and the controller is beeping.	Pressure reached controller's UPPER LIMIT.	Check [GEN] UPPER LIMIT and adjust if desired. 3.9.9.3
When using AMH automated mass handler, PG7000 still prompts for manual mass loads.	Mass loading resolution is set to finer than 0.1 kg and prompts are to load trim mass, AMH mass handler did not initialize.	Adjust mass loading resolution to 0.1 kg, initialize AMH mass set by selecting it. 3.9.10, 3.11.1.10
Automated pressure control (GEN) is overshooting the pressure at which the piston floats.	The pressure controller TOLERANCE function setting is too small or the volume setting (PG7302/PG7307 only) is incorrect.	Adjust the tolerance setting, adjust the volume setting (PG7302/PG7307 only). 3.9.9.4, 3.9.9.6
	Piston position detection system is not properly calibrated and piston is not floating as expected.	Calibrate piston position indication system. 5.2.2
	With a PG7302 at low pressure there may be excessive air in the test system.	Purge the test system of air prior to operating the PG7302. Use the PPCH prime and purge function. PPCH Operation and Maintenance Manual
Automated pressure control (GEN) is extremely slow or never floats the pistons.	The test volume is too large or the volume setting is incorrect (PG7302/PG7307 only).	Reduce the test volume and/or, if possible, make the tolerance setting smaller, adjust the volume setting (PG7302/PG7307 only). 3.9.9.4, 3.9.9.6
Automated pressure control (GEN) is not increasing or decreasing pressure as expected.	Pressure or vacuum supply on the pressure controller is not adequate.	Provide correct pressure and vacuum supplies to pressure controller. See the pressure controllers Operation and Maintenance Manual.
Automated pressure control (GEN) is not starting after setting a target and loading mass AND measurement mode is absolute by vacuum.	In absolute by vacuum measurement mode, fefore automated pressure generation begins, the reference vacuum must be below 20 Pa.	Wait for vacuum to reach less than 20 Pa, check and correct vacuum supply if inadequate.

© 2011 Fluke Calibration

원문: Fluke Calibration PG7302 메뉴얼(영문) · 제조사 원문 자료입니다. 사양은 제조사 사정에 따라 변경될 수 있습니다.

Notes

원문: Fluke Calibration PG7302 메뉴얼(영문) · 제조사 원문 자료입니다. 사양은 제조사 사정에 따라 변경될 수 있습니다.

7. Appendix

7.1 Conversion of Numerical Values

PG7000 performs all internal calculations in SI units. Numerical values input or output in other units are converted to SI immediately after entry and back to other units just before output as needed.

The tables below provide the conversion coefficients used by PG7000 to convert numerical values expressed in SI units to corresponding values expressed in other units.

7.1.1 Pressure

Table 30. Pressure Unit of Measure Conversions

TO CONVERT FROM PA TO		MULTIPLY BY
Pa	Pascal	1.0
mbar	millibar	1.0 E-02
kPa	kilo Pascal	1.0 E-03
bar	Bar	1.0 E-05
mmWa @ 4°C	millimeter of water	1.019716 E-01
mmHg @ 0°C	millimeter of mercury	7.50063 E-03
psi	pound per square inch	1.450377 E-04
psf	pound per square foot	1.007206 E-06
inWa @ 4°C	inch of water	4.014649 E-03
inWa @ 20°C	inch of water	4.021732 E-03
inWa @ 60°F	inch of water	4.018429 E-03
inHg @ 0°C	inch of mercury	2.953 E-04
kcm^2	kilogram force per centimeter square	1.019716 E-05
Torr	Torr (mmHg @ 0°C)	7.50063 E-03
mTor	milli Torr (micron Hg @ 0°C)	7.50063
user	User	User defined coefficient

7.2 Defined Pressure Calculations

Sections 7.2.1 and 7.2.2 document the calculations used by PG7000 piston gauges to obtain the defined pressure.

Table 31 defines the pressure calculation variables used in Sections 7.2.1 and 7.2.2.

© 2010 Fluke Calibration

원문: Fluke Calibration PG7302 메뉴얼(영문) · 제조사 원문 자료입니다. 사양은 제조사 사정에 따라 변경될 수 있습니다.

Table 31. PG7000 Defined Pressure Calculation Variables

VARIABLE	DEFINITION	UNITS	SOURCE OF VALUE
$\sqrt{A_{\theta,P}/\pi}$	Piston radius at temperature θ and pressure P	m	Calculated.
$A_{20,0}$	Piston effective area at 20°C, P_{atm}	mm^2	Piston-cylinder module file (3.11.1.3).
$A_{\theta,P}$	Piston effective area at temperature θ, pressure P	m^2	Calculated from $A_{20,0}$ in piston-cylinder module file (3.11.1.3).
G	Local gravity	m/s^2	Local, standard or user as specified in current SETUP file (3.10).
K_N	Nominal mass to pressure conversion coefficient for a given piston-cylinder size	Pa/kg	Calculated from $A_{20,0}$ and standard conditions.
M	Mass load	kg	Current mass loading instruction (3.6, 3.9.11).
P_A	Absolute pressure	Paa	Calculated.
P_{atm}	Atmospheric (ambient) pressure	Paa	Internal measurement, user entered value or standard as specified by SETUP file (3.10).
P_G	Gauge pressure	Pa	Calculated.
P_{HA}	Fluid head correction in absolute mode	Pa	Calculated using device heights and medium (7.2.3.2, 3.9.7, 3.11.3).
P_{HG}	Fluid head correction in gauge mode	Pa	Calculated using device heights and medium (7.2.3.2, 3.9.7, 3.11.3).
P_{HD}	Fluid head correction in high line differential mode	Pa	Calculated using device heights and medium (7.2.3.2, 3.9.7, 3.11.3).
P_L	Line Pressure	Pa	High line differential mode only (3.9.4.2).
P_{nom}	Nominal pressure	Pa	In pressure to mass mode $P_{nom}=P_{req}$ In mass to pressure mode $P_{nom}=M \cdot K_N$
P_{offset}	Difference between PG7601 and RPM at the static pressure of differential mode	Pa	Determined experimentally in PG7601 differential mode operation (see Section 3.9.4.1, Selecting Differential Mode, Setting Static Pressure, Finding RPM Offset).
P_{RPM}	Current static pressure reading from reference pressure monitor	Paa	Read automatically from external atm P source specified by SETUP file. Used in PG7601 differential mode only (3.10, 3.9.4.1).
ΔP_D	Differential pressure	Pa	Calculated. PG7601 differential mode only (3.9.4.1).
ΔP_{HLD}	High line differential pressure	Pa	Calculated. High line differential mode only (3.9.4.2).
ΔP_{nom}	Nominal differential pressure in high line differential mode	Pa	In pressure to mass mode $\Delta P_{nom}=\Delta P_{req}$ In mass to pressure mode $\Delta P_{nom}=(M_R - M_{RX}) \cdot K_N$.
Γ	Surface tension coefficient	N/m	Piston-cylinder module file (3.11.1.3).
α_C	Cylinder linear thermal expansion coefficient	$°C^{-1}$	Piston-cylinder module file (3.11.1.3).
α_P	Piston linear thermal expansion coefficient	$°C^{-1}$	Piston-cylinder module file (3.11.1.3).
λ	Piston-cylinder pressure coefficient	Pa^{-1}	Piston-cylinder module file (3.11.1.3).
θ	Temperature of piston-cylinder	°C	Internal measurement, user entered value or standard as specified by SETUP file (3.10).
ρ_a	Air density	kg/m^3	Calculated from standard air density corrected for actual atmospheric pressure, ambient temperature and relative humidity (atm p, humidity and temp source are specified by SETUP file) (3.10).
ρ_m	Mass density	kg/m^3	Mass set file (3.11.1.8).
Subscripts specific to high line differential mode (see Section 3.9.4.2).			
$(\ )_{P+\Delta P}$	Line pressure + differential pressure (reference piston-cylinder)	-	
$(\ )_R$	Reference	-	
$(\ )_{RX}$	Reference, at time of cross float	-	
$(\ )_T$	Tare	-	
$(\ )_{TX}$	Tare, at time of cross float	-	

원문: Fluke Calibration PG7302 메뉴얼(영문) · 제조사 원문 자료입니다. 사양은 제조사 사정에 따라 변경될 수 있습니다.

7.2.1 PG7102, PG7202 and PG7302

PG7102, PG7202 and PG7302 perform mass to pressure and pressure to mass calculations as follows:

- Gauge pressure:

$$P_G = \frac{Mg\left(1-\frac{\rho_a}{\rho_m}\right)+2\pi\Gamma\sqrt{\frac{A_{\theta,P}}{\pi}}}{A_{\theta,P}} + P_{HG}$$

$$A_{\theta,P} = A_{20,0}\cdot 10^{-6}\cdot\left[1+(\theta-20)(\alpha_P+\alpha_C)\right](1+\lambda P_{nom})$$

- Absolute pressure by addition of atmosphere reference:

$$P_A = \frac{Mg\left(1-\frac{\rho_a}{\rho_m}\right)+2\pi\Gamma\sqrt{\frac{A_{\theta,P}}{\pi}}}{A_{\theta,P}} + P_{HA} + P_{atm}$$

$$A_{\theta,P} = A_{20,0}\cdot 10^{-6}\cdot\left[1+(\theta-20)(\alpha_P+\alpha_C)\right](1+\lambda P_{nom})$$

- High line differential pressure:

$$\Delta P_{HLD} = \frac{(M_R - M_{RX})g\left(1-\frac{\rho_a}{\rho_m}\right)}{A_{\theta,P+\Delta P}} + P_L\left[(\alpha_{P_R}+\alpha_{C_R})(\theta_{RX}-\theta_R)-(\alpha_{P_T}+\alpha_{C_T})(\theta_{TX}-\theta_T)\right] + P_{HD}$$

$$A_{\theta,P+\Delta P} = A_{20,0}\cdot 10^{-6}\cdot\left[1+(\theta_R-20)(\alpha_{P_R}+\alpha_{C_R})\right]\left[1+\lambda(P_L+\Delta P_{nom})\right]$$

$$P_L = P_{G_{RX}} = \left(\frac{Mg\left(1-\frac{\rho_a}{\rho_m}\right)+2\pi\Gamma\sqrt{\frac{A_{\theta,P}}{\pi}}}{A_{\theta,P}} + P_{HG}\right)_{RX}$$

© 2011 Fluke Calibration

원문: Fluke Calibration PG7302 메뉴얼(영문) · 제조사 원문 자료입니다. 사양은 제조사 사정에 따라 변경될 수 있습니다.

we measure, we calibrate, we validate.
㈜테솔 · www.tessol.com TS-TL-FLK-093 207 / 214
KOLAS 국제공인교정기관 · ISO/IEC 17025

TS-TL-FLK-093

7.2.2 PG7601

PG7601 performs pressure to mass and mass to pressure calculations as follows:

- Gauge mode:

$$P_G = \frac{Mg\left(1-\frac{\rho_a}{\rho_m}\right)+2\pi\Gamma\sqrt{\frac{A_{\theta,P}}{\pi}}}{A_{\theta,P}} + P_{HG}$$

$$A_{\theta,P} = A_{20,0}\cdot 10^{-6}\cdot\left[1+(\theta-20)(\alpha_P+\alpha_C)\right](1+\lambda P_{nom})$$

- Absolute pressure by adding atmospheric pressure:

$$P_A = \frac{Mg\left(1-\frac{\rho_a}{\rho_m}\right)+2\pi\Gamma\sqrt{\frac{A_{\theta,P}}{\pi}}}{A_{\theta,P}} + P_{HA} + P_{atm}$$

$$A_{\theta,P} = A_{20,0}\cdot 10^{-6}\cdot\left[1+(\theta-20)(\alpha_P+\alpha_C)\right](1+\lambda P_{nom})$$

- Absolute pressure with vacuum reference:

$$P_A = \frac{Mg+2\pi\Gamma\sqrt{\frac{A_{\theta,P}}{\pi}}}{A_{\theta,P}} + P_{HA} + P_{vac}$$

$$A_{\theta,P} = A_{20,0}\cdot 10^{-6}\cdot\left[1+(\theta-20)(\alpha_P+\alpha_C)\right](1+\lambda P_{nom})$$

- Differential pressure (differential mode):

$$\Delta P_D = \frac{Mg+2\pi\Gamma\sqrt{\frac{A_{\theta,P}}{\pi}}}{A_{\theta,P}} + P_{HA} + P_{vac} - P_{RPM} - P_{offset}$$

$$A_{\theta,P} = A_{20,0}\cdot 10^{-6}\cdot\left[1+(\theta-20)(\alpha_P+\alpha_C)\right](1+\lambda P_{nom})$$

원문: Fluke Calibration PG7302 메뉴얼(영문) · 제조사 원문 자료입니다. 사양은 제조사 사정에 따라 변경될 수 있습니다.

we measure, we calibrate, we validate.
㈜테솔 · www.tessol.com TS-TL-FLK-093 208 / 214
KOLAS 국제공인교정기관 · ISO/IEC 17025

TS-TL-FLK-093

7.2.3 Fluid Heads

7.2.3.1 Fluid Head Components

PG7000 supports three different fluid head components (see Sections 3.11.3, 3.9.7): DUT head, ATM head and Piston head. The three components are combined to create the overall head correction for each PG7000 measurement mode (see Section 7.2.3.2).

DUT head: Calculates and applies a fluid head correction to predict the defined pressure at a level other than the PG7000's reference level (see Section 3.9.7).

The DUT head is calculated following:

$$P_{H_{DUT}} = (\rho_f - \rho_a) g h_D$$

Where:

$P_{H_{DUT}}$, DUT head [Pa]	=	fluid head correction applied to the defined pressure calculated at the PG7000 reference level.
ρ_f, fluid density [kg/m^3]	=	density of the pressurized medium (oil density = 916 kg/m^3, water density = 998.2321 kg/m^3, gas densities are calculated for N_2, He or air dependent on current pressure and temperature).
ρ_a, air density [kg/m^3]	=	density of ambient air calculated using current ambient pressure, temperature and relative humidity (values as specified in the active SETUP file, see Section 3.10). Assumed to be zero when operating in absolute with a vacuum reference mode. Calculated using static pressure density measured by RPM in PG7601 differential mode.
g, gravity [m/s^2]	=	acceleration due to gravity (value as specified in the active SETUP file, see Section 3.10).
h_D, DUT height [m]	=	Height of DUT above PG7000 reference level. Value is negative if below reference level.

ATM head: Calculates and applies a fluid head correction to internal or external barometer readings to correct the atmospheric pressure value to the PG7000's reference level if the barometer is reading at a different level (see Section 3.11.3.3).

The ATM head is calculated following:

$$P_{H_{atm}} = \rho_{as} g h_B$$

Where:

$P_{H_{atm}}$, ATM head [Pa]	=	fluid head correction applied to the internal or external barometer reading.
ρ_{as}, air density [kg/m^3]	=	standard air density of 1.2 kg/m^3.
g, gravity [m/s^2]	=	acceleration due to gravity (value as specified in the active SETUP file, see Section 3.10).
h_B, barometer height [m]	=	Height of the internal or external barometer above the PG7000 reference level. Value is negative if below reference level.

© 2011 Fluke Calibration

원문: Fluke Calibration PG7302 메뉴얼(영문) · 제조사 원문 자료입니다. 사양은 제조사 사정에 따라 변경될 수 있습니다.

TS-TL-FLK-093

we measure, we calibrate, we validate.
㈜테솔 · www.tessol.com TS-TL-FLK-093 209 / 214
KOLAS 국제공인교정기관 · ISO/IEC 17025

PISTON head: Calculates and applies a fluid head correction to compensate for the difference between the current piston position and the PG7000's reference level (see Section 3.11.3.4).

The DUT head is calculated following:

$$P_{H_P} = (\rho_f - \rho_a) g h_P$$

Where:

P_{H_P}, Piston head [Pa]	=	fluid head correction applied to calculate defined pressure.
ρ_f, fluid density [kg/m^3]	=	Density of test fluid at current pressure.
ρ_a, air density [kg/m^3]	=	density of ambient air calculated using current ambient pressure, temperature and relative humidity (values as specified in the active SETUP file, see Section 3.10). Assumed to be zero when operating in absolute with a vacuum reference mode. Calculated using static pressure density measured by RPM in PG7601 differential mode.
g, gravity [m/s^2]	=	acceleration due to gravity (value as specified in the active SETUP file, see Section 3.10).
h_P, piston height [m]	=	Height of the current piston position above PG7000 reference level.

7.2.3.2 Overall Fluid Head Correction

The overall fluid head correction for each PG7000 mode results from combining the three head components. In general, overall head correction is given by:

$$P_H = -P_{H_{DUT}} - P_{H_{atm}} + P_{H_P}$$

Gauge mode:

$$P_{HG} = -(\rho_f - \rho_a) g h_D + (\rho_f - \rho_a) g h_P$$

Absolute mode by adding atmospheric pressure: Air density is zero for all components except for the ATM head which is used to compensate for barometer height.

$$P_{HA} = -\rho_f g h_D - \rho_{as} g h_B + \rho_f g h_P$$

Absolute mode with vacuum reference: Air density is zero for all terms and no barometer is used.

$$P_{HA} = -\rho_f g h_D + \rho_f g h_P$$

High line differential mode: Subtraction of tare head correction from reference gives total differential head correction, assuming both tare and reference PG7000 levels are at the same height. Note that ($P+\Delta P$) represents fluid properties evaluated at line pressure plus differential pressure. Also note that the barometer head corrections cancel out.

$$P_{HD} = P_{HG_R} - P_{HG_T} = -(\rho_{f_{P+\Delta P}} - \rho_{f_P}) g\, h_D + (\rho_{f_{P+\Delta P}} h_{P_R} - \rho_{f_P} h_{P_T}) g$$

Differential mode: Head correction is the same as for absolute mode with vacuum reference. Head correction for the height of the RPM is unnecessary through the use of the RPM offset.

$$P_{HA} = -\rho_f g h_D + \rho_f g h_P$$

원문: Fluke Calibration PG7302 메뉴얼(영문) · 제조사 원문 자료입니다. 사양은 제조사 사정에 따라 변경될 수 있습니다.

TESSOL Technical Library

TS-TL-FLK-093

we measure, we calibrate, we validate.

㈜테솔 · www.tessol.com TS-TL-FLK-093 210 / 214

KOLAS 국제공인교정기관 · ISO/IEC 17025

7.3 Glossary

Absolute	As in absolute pressure. Pressure expressed relative to vacuum.
Absolute by vacuum, *avac*	Absolute pressure determined by defining pressure relative to vacuum in an evacuated bell jar (PG7601 only).
Absolute by atmosphere, *aatm*	Absolute pressure determined by adding atmospheric pressure to gauge pressure.
Adder	A value added to internal sensor readings to offset the readings (pressure adder, temperature adder, humidity adder, vacuum adder) for calibration adjustment.
Ae	Piston-cylinder effective area.
AMH	Optional automated mass handling system.
ATM Head	Pressure head correction to the barometer measurement to take into consideration the difference between the actual barometer level and the PG7000 reference level.
Crossfloat	Process of comparison of two piston cylinders in which they are connected together under pressure and the mass of one is adjusted so that both pistons float together at a common pressure. Used to set the line pressure in high line differential measurement mode.
Differential	As in differential pressure. Pressure expressed relative to atmospheric or another static pressure determined by subtracting the static pressure from absolute by vacuum (differential measurement mode).
DUT (Device Under Test)	The device being tested or calibrated.
DUT Head	Fluid head correction to the pressure defined by PG7000 to predict the pressure at the level of the DUT, which may be different from the PG7000 reference level.
FS (Full Scale)	The full scale value is the maximum value or the span of a measurement range. Limits and specifications are often expressed as % FS.
g, gl	Acceleration due to gravity (g). Acceleration due to gravity at location of use (gl).
Gauge	As in gauge pressure. Pressure expressed relative to atmospheric pressure.
He	Helium gas.
Head	Fluid head, a pressure difference due to a difference in height. See also ATM head, DUT head and PISTON head.
High Line Differential	As in high line differential pressure measurement mode. Pressure expressed relative to a line pressure greater than atmospheric pressure. Defined by using two piston gauges.
HSTOP, LSTOP	High stop and low stop, piston maximum end of stroke positions.
InHg	Pressure unit of measure, inches of mercury.
InWa	Pressure unit of measure, inches of water.
kcm^2	Pressure unit of measure, kilogram per centimeter square.
Line Pressure	Pressure on the low side in high line differential pressure measurement mode. Pressure relative to which the differential pressure is defined.
Measurement Mode	Mode in which PG7000 is defining pressures. These include gauge (pressure relative to atmospheric pressure), absolute by atmosphere (pressure relative to vacuum determined by adding atmospheric pressure to gauge pressure), absolute by vacuum (PG7601 only) (pressure relative to absolute vacuum determined by establishing a vacuum around the mass load), differential (PG7601 only) (pressure relative to atmospheric or another static pressure determined by subtracting the static pressure from absolute by vacuum).
MS (Mass Set)	A group of masses composed for use with a PG7000 piston gauge.
Mass Bell	The sleeve loaded onto the piston to carry other masses.
Mass Entry Mode (mass to pressure)	Operating mode in which the user enters the mass loaded on the piston and the PG7000 calculates the defined pressure. See also Pressure Entry Mode.
Medium, pressurized	The pressurized fluid.
Multiplier	A value by which internal sensor readings are multiplied to change their slope (pressure multiplier, temperature multiplier, humidity multiplier, vacuum multiplier) for calibration adjustment.

© 2011 Fluke Calibration

원문: Fluke Calibration PG7302 메뉴얼(영문) · 제조사 원문 자료입니다. 사양은 제조사 사정에 따라 변경될 수 있습니다.

TESSOL Technical Library
TS-TL-FLK-093

we measure, we calibrate, we validate.
㈜테솔 · www.tessol.com TS-TL-FLK-093 211 / 214
KOLAS 국제공인교정기관 · ISO/IEC 17025

N2	Nitrogen gas.
Nominal Mass	The mass loaded on the piston in terms of the nominal values written on the individual masses. See also True Mass.
Normal	A conventional or standard value.
PC	Piston-cylinder, piston-cylinder module.
Pressure Entry Mode (pressure to mass)	Operating mode in which the user enters the pressure to be defined and PG7000 calculates the mass to load. See also Mass entry mode.
PISTON head	Fluid head correction based on the difference between the piston's current position and the reference level.
PRT	Platinum Resistance Thermometer. The element used in the piston-cylinder mounting post to measure temperature.
Ready/Not Ready	Indication of when conditions are present to make in tolerance pressure definitions based on specific criteria for each condition.
Reference Level	Height at which pressures are defined. PG7000 defines pressures at its reference level. Fluid head corrections correct the pressure relative to the reference level.
Reference PG7000	The PG7000 used on the reference side (high side) in high line differential pressure mode (see also Tare PG7000).
SETUP file	File specifying the source of values for the variables used by PG7000 to calculate defined pressure.
Static Pressure	Pressure on the low side in PG7601 differential mode.
Tare PG7000	The PG7000 on used on the tare side (low side) in high line differential pressure mode (see also Reference PG7000).
True Mass	The actual mass loaded on the piston using the measured value of each mass. See also Nominal Mass.
User Level	Level of security that can be set to limit access to certain PG7000 functions

© 2011 Fluke Calibration

원문: Fluke Calibration PG7302 메뉴얼(영문) · 제조사 원문 자료입니다. 사양은 제조사 사정에 따라 변경될 수 있습니다.

7.4 Limited Warranty and Limitation of Liability

Each Fluke product is warranted to be free from defects in material and workmanship under normal use and service. The warranty period is one year and begins on the date of shipment. Parts, product repairs and services are warranted for 90 days. This warranty extends only to the original buyer or end-user customer of a Fluke authorized reseller, and does not apply to fuses, disposable batteries or to any product which, in Fluke's opinion, has been misused, altered, neglected, contaminated, or damaged by accident or abnormal conditions of operation or handling. Fluke warrants that software will operate substantially in accordance with its functional specifications for 90 days and that it has been properly recorded on non-defective media. Fluke does not warrant that software will be error free or operate without interruption.

Fluke authorized resellers shall extend this warranty on new and unused products to end-user customers only but have no authority to extend a greater or different warranty on behalf of Fluke. Warranty support is available only if product is purchased through a Fluke authorized sales outlet or Buyer has paid the applicable international price. Fluke reserves the right to invoice Buyer for importation costs of repair/replacement parts when product purchased in one country is submitted for repair in another country.

Fluke's warranty obligation is limited, at Fluke's option, to refund of the purchase price, free of charge repair, or replacement of a defective product which is returned to a Fluke authorized service center within the warranty period.

To obtain warranty service, contact your nearest Fluke authorized service center to obtain return authorization information, then send the product to that service center, with a description of the difficulty, postage and insurance prepaid (FOB Destination). Fluke assumes no risk for damage in transit. Following warranty repair, the product will be returned to Buyer, transportation prepaid (FOB Destination). If Fluke determines that failure was caused by neglect, misuse, contamination, alteration, accident or abnormal condition of operation or handling, including overvoltage failures caused by use outside the product's specified rating, or normal wear and tear of mechanical components, Fluke will provide an estimate of repair costs and obtain authorization before commencing the work. Following repair, the product will be returned to the Buyer transportation prepaid and the Buyer will be billed for the repair and return transportation charges (FOB Shipping Point).

THIS WARRANTY IS BUYER'S SOLE AND EXCLUSIVE REMEDY AND IS IN LIEU OF ALL OTHER WARRANTIES, EXPRESS OR IMPLIED, INCLUDING BUT NOT LIMITED TO ANY IMPLIED WARRANTY OF MERCHANTABILITY OR FITNESS FOR A PARTICULAR PURPOSE. FLUKE SHALL NOT BE LIABLE FOR ANY SPECIAL, INDIRECT, INCIDENTAL OR CONSEQUENTIAL DAMAGES OR LOSSES, INCLUDING LOSS OF DATA, ARISING FROM ANY CAUSE OR THEORY.

Since some countries or states do not allow limitation of the term of an implied warranty, or exclusion or limitation of incidental or consequential damages, the limitations and exclusions of this warranty may not apply to every buyer. If any provision of this Warranty is held invalid or unenforceable by a court or other decision-maker of competent jurisdiction, such holding will not affect the validity or enforceability of any other provision.

Fluke Corporation	Fluke Europe B.V.
P.O. Box 9090	P.O. Box 1186
Everett, WA 98206-9090	5602 BD Eindhoven
U.S.A.	The Netherlands

© 2011 Fluke Calibration

원문: Fluke Calibration PG7302 메뉴얼(영문) · 제조사 원문 자료입니다. 사양은 제조사 사정에 따라 변경될 수 있습니다.

TS-TL-FLK-093

we measure, we calibrate, we validate.
㈜테솔 · www.tessol.com TS-TL-FLK-093 213 / 214
KOLAS 국제공인교정기관 · ISO/IEC 17025

Table 32. Fluke Calibration Authorized Service Providers

FLUKE CALIBRATION AUTHORIZED SERVICE PROVIDERS – PRESSURE AND FLOW CALIBRATION PRODUCTS			
COMPANY	**ADDRESS**	**TELEPHONE, FAX & EMAIL**	**NORMAL SUPPORT REGION**
Fluke Calibration	4765 East Beautiful Lane Phoenix AZ 85044-5318 USA	Tel: 602.431.9100 Fax: 602.431.9559 dhiservice@fluke.com	Worldwide
Minerva Meettechniek B.V.	Chrysantstraat 1 3812 WX Amersfoort The Netherlands	Tel: 31 33 46 22 000 Fax: 31 33 46 22 218 info@minervaipm.com	European Union
europascal GmbH	An der Wiesenhecke 10 D-63456 Hanau Germany	Tel: +49 61 81 42 309 0 Fax: +49 61 81 42 309 22 service@europascal.de	European Union
Ohte Giken Inc Technology Center	258-1, Nakadai Kasumigaura-machi, Niihari-Gun, Ibaraki 300-0133 Japan	Tel: 81/29.840.9111 Fax: 81/29.840.9100 tech@ohtegiken.co.jp	Japan/Asia
Fluke Beijing Service Center	Rm. 401, SCITEC Tower, N0. 22, Jianguomenwai Dajie, Beijing 100004, PRC	Hot Line: 400.810.3435-3 Fax:(8610) 65286307 serviceinfo@fluke.com.cn	Peoples Republic of China
Fluke South East Asia PTE LTD.	Fluke ASEAN Regional Office Service Center 60 Alexandra Terrace #03-16 The Comtech (Lobby D) 118502 Singapore	Tel: (65) 6799-5588 Fax: (65) 6799-5589 service.asean@fluke.com	South East Asia

원문: Fluke Calibration PG7302 메뉴얼(영문) · 제조사 원문 자료입니다. 사양은 제조사 사정에 따라 변경될 수 있습니다.