FLUKE Calibration

PG-7000-AMH™

Automated Mass Handling for PG7000™ Piston Gauges

Technical Data

Add-on accessory automates mass handling over the complete piston gauge pressure range...

PG7000™, already the world's most advanced piston gauge, takes another step ahead with the introduction of AMH™ automated mass handling technology. Finally, tedious, error prone and wear inducing manual mass manipulation can be eliminated from high end piston gauge operation…over the full pressure range, in a bench top system, at a reasonable cost.

The AMH system is an optional accessory to PG7000 platforms. It can be added to existing platforms or ordered with new installations. Two models are available to cover the complete PG7000 line of gas and oil operated piston gauges…including absolute mode with a vacuum reference.

Thanks to the PG7000's unique system architecture, the exact level of automation appropriate for the application can be configured with standard components. Automate mass handling while maintaining direct operator control over pressure generation and adjustment…or use standard pressure controllers to automate pressure control and make fully automated piston gauge operation a reality. In all cases, PG7000's unified approach assures a simple, integrated system with a single local and remote interface.

PG7000-AMH…a new level in piston gauge applications… an ultra-high performance alternative in pressure controller applications…this changes everything!

AMH Technology

To install the AMH masses, a binary mass loading tray is placed on the piston cap and a mass bell is installed over the tray. The mass set's main mass discs are hung from the mass bell. Tubular binary masses are placed in descending sequence on the mass bell hanger and on the tray.

The mass handling system is placed over the installed mass set and controlled by the PG7000 platform, using RS-232 communications from the platform's COM3 port.

To load a specific mass value, the mass handling system raises the entire mass load above the piston upper end of stroke to the mass selection position. The mass is raised by a pneumatically actuated lifter acting on a lifter shaft connected to the binary mass spindle. Each tubular binary mass that is not to be loaded is held in place by engaging

원문: Fluke Calibration PG7000-AMH 데이터시트(영문) · 제조사 원문 자료입니다. 사양은 제조사 사정에 따라 변경될 수 있습니다.

three selector pins. The three main mass columns are rotated synchronously so that the main masses not to be loaded are held in place by the columns' retention ledges and masses to be loaded face release flats. When the mass selection is complete, the lifter moves down, placing the lifter shaft, binary spindle, bell and all the released masses onto the piston.

The AMH mass handling system is designed and tested to provide years of reli-able, maintenance free mass manipulation.

1. Trim mass tray
2. Control electronics
3. Mass lifting shaft
4. Lifter with bladder
5. Binary mass control manifold
6. Binary mass selector pin
7. Binary masses
8. Standard PG7000 piston-cylinder module
9. Binary mass tray
10. Main mass column drive belt
11. Main mass selector columns
12. Main masses
13. Mass loading bell
14. Standard PG7000 platform
15. Standard PG7601 bell jar (AMH-38)
16. Vacuum chamber (AMH-38)

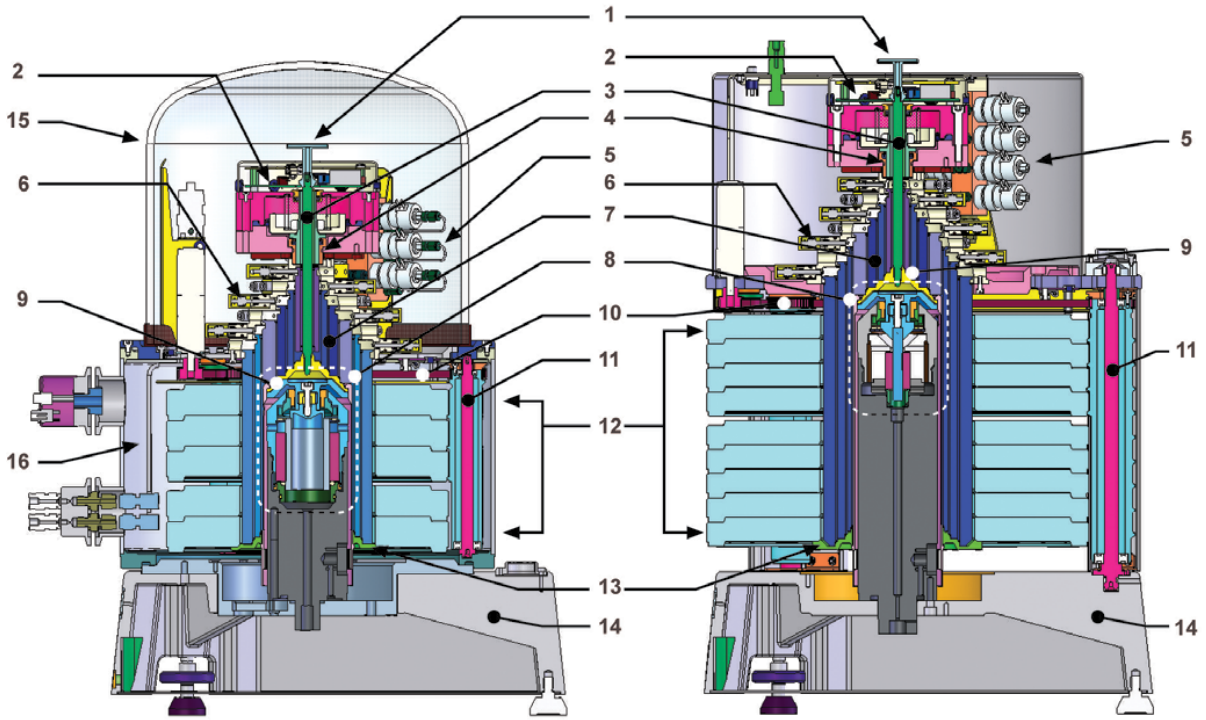

AMH-38 AMH-100

2 Fluke Corporation PG-7000-AMH™ Automated Mass Handling for PG7000™

원문: Fluke Calibration PG7000-AMH 데이터시트(영문) · 제조사 원문 자료입니다. 사양은 제조사 사정에 따라 변경될 수 있습니다.

FLUKE Calibration

AMH operation

Mass loading control

Control of the mass handling system is integrated into PG7000's intelligent operation. In pressure entry mode, when a target pressure command is entered from the front panel or remotely, PG7000 calculates the mass required to achieve the target pressure. It then stops piston rotation and loads the mass value by sending a command to the AMH. The true value of mass loaded and exact pressure value achieved are reported and updated real time. In mass entry mode, the requested value is loaded directly.

The mass actually loaded by the AMH is as close as possible to the target value within AMH's 100 g (3.5 oz) loading resolution. If more precise mass loading is specified, the operator is instructed to load trim masses on the trim mass tray (not available in absolute mode with vacuum reference).

Access to pinston-clylinger module

The same piston-cylinder modules used in PG7000 with manual mass handling are used with AMH. The piston-cylinder module can be removed and reinstalled in less than five minutes, and requires about the same amount of effort as a single, manual mass handling calibration sequence.

The piston-cylinder module is accessed by removing the AMH mass handling system and masses. The procedure is to load all of the mass on the piston so that no masses are in contact with the mass handler. The mass handler is lifted off of the PG7000 platform vertically, leaving behind the complete loaded mass set. The masses are then removed manually to access the piston-cylinder module.

AMH-38, 38 KG under vacuum for for PG7601

AMH-38 piston-cylinder ranges and automated increment

Piston-cylinder module	Minimum pressure		Maximum pressure		Minimum automoated increment	
	KPa	psi	KPa	psi	KPa	psi
PC-7100/7600-10	7	1	380	55	1	0.15
PC-7100/7600-10, TC	10	1.5	380	55	1	0.15
PC-7100/7600-20	18	2.6	760	110	2	0.3
PC-7100/7600-50	35	5	1 900	275	5	0.7
PC-7100/7600-100	70	10	3 800	551	10	1.5
PC-7100/7600-200	140	20	7 600	1 100	20	3

The AMH-38 provides automated mass handling of a 38 kg (84 lb)mass set for the PG7601 piston gauge platform. The mass handling system is integrated into a vacuum chamber which provides KF40 vacuum fittings for connection of a turbo molecular vacuum pump and external vacuum gauge if desired. Automated mass handling eliminates the need to break the vacuum between pressure points and reference vacuum as low as 0.01 Pa (< 0.1 mTorr) can be maintained indefinitely.

AMH-100, 100 kg for PG7102, 7202, 7302

AMH-100 piston-cylinder ranges and automated increment

Piston-cylinder module	Minimum pressure		Maximum pressure		Minimum automoated increment	
	KPa	psi	KPa	psi	KPa	psi
PC-7100/7600-10	10	1.5	1	150	1	0.15
PC-7100/7600-10, TC	13	1.9	1	150	1	0.15
PC-7100/7600-50	50	7	5	750	5	0.7
PC-7100/7600-200	200	29	11[1]	1 600[1]	20	3
PC-7200 or 7300-100	100	14.5	10	1 500	10	1.5
PC-7200 or 7300-200	200	29	20	3 000	20	3
PC-7200 or 7300-500	500	72.5	50	7 500	50	7.3
PC-7200 or 7300-1	1 000	145	100	15 000	100	14.5
PC-7200 or 7300-2	2 000	290	200[2]	30 000[2]	200	29
PC-7300-5	5 000	725	500	72 500	500	75

[1] Limited by fall rate.
[2] 100 MPa (15 000 psi) max in PG7202.

The AMH-100 provides automated mass handling of a 100 kg (220 lb) mass set for the PG7102, PG7202 and PG7302 piston gauge platforms.

The 100 kg (220 lb) mass set results in a very wide range on a single piston-cylinder module, minimizing the need for piston-cylinder changes. A mass set of less than 100 kg (220 lb) can be configured if less than 100 kg (220 lb) is needed.

3 Fluke Corporation PG-7000-AMH™ Automated Mass Handling for PG7000™

원문: Fluke Calibration PG7000-AMH 데이터시트(영문) · 제조사 원문 자료입니다. 사양은 제조사 사정에 따라 변경될 수 있습니다.

Specifications

FLUKE® Calibration

Automated mass handler	
Power requirements	100 V to 240 V ac, 50 Hz to 60 Hz, 30 W max consumption
Normal operating temperature range	15 °C to 35 °C (59 °F to 95 °F)
Weight (mass handler only)	AMH-38: 18 kg (40 lb) AMH-100: 12 kg (26 lb)
Dimensions (H x W x D)	AMH-38: 41 cm x 37 cm x 38 cm (16.3 in x 14.6 in x 15 in) AMH-100: 41 cm x 41 cm x 36 cm (16.3 in x 16.1 in x 14.1 in)
Communications port	RS-232 (COM1), controlled by PG7000 platform
Drive air supply	550 kPa (80 psi) "shop air"
Drive air connection	Quick connect equivalent to Swagelok® QM Series (QM2-B200)
AMH-38 vacuum chamber	Fittings: (2) KF40 for pump and vacuum gauge upgrade Typical Residual Vacuum: < 10 mPa (0.08 mTorr) with 70 l/s turbo pump, higher pressure with other pumps
Mass changing time	< 15 sec
CE conformance	Available, must be specified

This brochure covers the AMH-38 and AMH-100 automated mass handling accessories for PG7000 piston gauges. For complete PG7000 piston gauge specifications, see the PG7000 brochure and Uncertainty Analysis.

Mass set		
	MS-AMH-38, 25, 13	**MS-AMH-100, 80, 60, 40**
Fits PG7000 platforms	7601, 7607	7102, 7202, 7302, 7307
Minimum mass (piston and bell)	0.7 kg (1 kg w/ tungsten carbide 10 kPa/kg)	1 kg
Maximum mass load	38 kg, 25 kg or 13 kg	103.7 kg, 83.7 kg, 63.7 kg or 43.7 kg
Minimum automated increment	100 g (373 increments), trim masses to 0.01 g may be loaded manually	100 g (1 027 increments), trim masses to 0.01 g may be loaded manually
Mass set composition	Piston 0.2 kg (10 kPa/kg t-c 0.5 kg), Bell, tray, lifter assembly 0.5 kg, (6) cylindrical binary masses of 0.1, 0.2, 0.4, 0.8, 1.6, 3.2 kg, (5, 3 or 1) main mass disks of 6.2 kg each, (1) trim mass set of 50 g to 0.01 g*	Piston 0.2 kg (10 kPa/kg t-c 0.5 kg), Bell, tray, lifter assembly 0.8 kg, (7) cylindrical binary masses of 0.1, 0.2, 0.4, 0.8, 1.6, 3.2, 6.4 kg, (9, 7, 5 or 3) main mass disks of 10 kg each, (1) trim mass set of 50 g to 0.01 g*
Mass uncertainty	± 5 ppm	± 5 ppm

* Trim masses loaded manually onto trim mass tray when needed.

The AMH automated mass handling system is ordered as an accessory to a PG7000 piston gauge platform. AMH automated mass handling requires an AMH mass handler and mass set.

For new installations, the mass handler is ordered with the piston gauge platform as a separate line item. The AMH mass set is ordered in place of a manual mass set.

AMH mass handling systems may be used with existing PG7000 platforms. Most PG7601s can use AMH-38 without modification. PG7102, PG7202 and PG7302 may require modification for AMH-100.

Please contact Fluke Calibration for assistance.

Ordering information

Model

AMH-38-VAC Automated mass handler
MS-AMH-13 13 kg mass set, AMH
MS-AMH-25 25 kg mass set, AMH
MS-AMH-38 38 kg mass set, AMH
AMH-100 Automated mass handler
MS-AMH-40 40 kg mass set, AMH
MS-AMH-60 60 kg mass set, AMH
MS-AMH-80 80 kg mass set, AMH
MS-AMH-100 100 kg mass set, AMH
AMH-100-RETRO-AR Modify platform with AutoRotate
AMH-100-RETRO-NAR Modify platform without AutoRotate

System configuration

Many pressure generation and control choices for PG7000 systems are available including fully automated options for gas pressure from low absolute to 100 MPa (15 000 psi) and oil pressure to 500 MPa (72 500 psi). Consult Fluke Calibration or your local representative for applications assistance.

Fluke. *Keeping your world up and running.®*

Fluke Calibration
PO Box 9090, Everett, WA 98206 U.S.A.

Fluke Europe B.V.
PO Box 1186, 5602 BD
Eindhoven, The Netherlands

For more information call:
In the U.S.A. (800) 443-5853 or
Fax (425) 446-5116
In Europe/M-East/Africa +31 (0) 40 2675 200 or
Fax +31 (0) 40 2675 222
In Canada (800)-36-FLUKE or
Fax (905) 890-6866
From other countries +1 (425) 446-5500 or
Fax +1 (425) 446-5116
Web access: http://www.fluke.com

©2010 Fluke Corporation.
Specifications subject to change without notice. AMH, AMH-38, AMH-100, PG7000, PG7102, PG7202, PG7302 and PG7601 are trademarks, registered and otherwise, of Fluke Corporation. Swagelok is a registered trademark of the Swagelok Companies
Printed in U.S.A. 6/2010 3031104B B-EN-N

Modification of this document is not permitted without written permission from Fluke Corporation.

원문: Fluke Calibration PG7000-AMH 데이터시트(영문) · 제조사 원문 자료입니다. 사양은 제조사 사정에 따라 변경될 수 있습니다.