DH Instruments
A Fluke Company

AMH-38™/AMH-100™
Automated Mass Handling System for PG7000 Piston Gauges
(PG7000 Ver. 3.0 and Higher)
Operation and Maintenance Manual

© 2009 DH Instruments, a Fluke Company

원문: Fluke Calibration PG7000-AMH 메뉴얼(영문) · 제조사 원문 자료입니다. 사양은 제조사 사정에 따라 변경될 수 있습니다.

© 2009, **DH Instruments, a Fluke Company** All rights reserved.

Information in this document is subject to change without notice. No part of this document may be reproduced or transmitted in any form or by any means, electronic or mechanical, for any purpose, without the express written permission of **DH Instruments, a Fluke Company** 4765 East Beautiful Lane Phoenix AZ 85044-5318 USA.

DH Instruments makes every effort to ensure the accuracy and quality of its published materials; however, no warranty, expressed or implied, is provided. **DH Instruments** disclaims any responsibility or liability for any direct or indirect damages resulting from the use of the information in this manual or products described in it. Mention of any product or brand does not constitute an endorsement by **DH Instruments** of that product or brand. This manual was originally composed in English and was subsequently translated into other languages. The fidelity of subsequent translations cannot be guaranteed. In case of conflict between the English version and another language version, the English version takes precedence.

DH Instruments, **DH**, **DHI**, AMH-38, AMH-100, PG7000, PG7xxx are trademarks of **DH Instruments, a Fluke Company**, registered and otherwise.

Krytox is a registered trademark of the Dupont de Nemours Company.
Pyrex is a registered trademark of Dow Corning.

Document No. 3509389
090722
Printed in the USA.

© 2009 DH Instruments, a Fluke Company

원문: Fluke Calibration PG7000-AMH 메뉴얼(영문) · 제조사 원문 자료입니다. 사양은 제조사 사정에 따라 변경될 수 있습니다.

TABLE OF CONTENTS

TABLE OF CONTENTS I

TABLES III

FIGURES III

ABOUT THIS MANUAL V

1. INTRODUCTION 1

1.1 PRODUCT OVERVIEW 1
1.2 LOCATION AND DESCRIPTION OF THE COMPONENTS 2
1.2.1 AMH-38 2
1.2.2 AMH-100 3
1.3 SPECIFICATIONS 4

2. PREPARATION FOR OPERATION 5

2.1 UNPACKING AND INSPECTION 5
2.2 SITE REQUIREMENTS 7
2.2.1 SITE 7
2.2.2 GAS SUPPLIES 7
2.2.2.1 DRIVE AIR SUPPLY 7
2.2.2.2 VACUUM SUPPLY (AMH-38 ONLY) 8
2.3 SETTING UP THE AMH FOR OPERATION 9
2.3.1 GENERAL CONSIDERATIONS 9
2.3.2 SETTING UP THE AMH 9
2.3.2.1 CONNECTING THE DRIVE AIR SUPPLY 9
2.3.2.2 CONNECTING THE DRIVE VACUUM SUPPLY (AMH-38 ONLY) 11
2.3.2.3 CONNECTING ELECTRICAL POWER 11
2.3.2.4 CONNECTING PG7000 PLATFORM COMMUNICATIONS 12
2.3.2.5 CONNECTING A REFERENCE VACUUM SUPPLY (AMH-38 ONLY) 12
2.3.2.6 CONNECTING AN EXTERNAL REFERENCE VACUUM GAUGE (AMH-38 ONLY) 13
2.4 PREPARING THE PG7000 PLATFORM 13
2.4.1 PREPARING PG7102, PG7202, PG7302 PLATFORM HARDWARE FOR AMH-100 13
2.4.2 PREPARING PG7601 PLATFORM HARDWARE FOR AMH-38 13
2.5 CHECKING THE PG7000 PISTON-CYLINDER MODULES FOR AMH OPERATION 14
2.5.1 CHECKING THE PISTON CAP 14
2.5.2 CHECKING PISTON STOP BUSHING 14
2.6 INSTALLING THE AMH MASS SET 15
2.7 INITIAL START UP/VERIFICATION 17

3. OPERATION 19

3.1 GENERAL OPERATING PRINCIPLES 19
3.2 OPERATION 22
3.2.1 INSTALLING THE AMH MASS HANDLER ON THE PG7000 PLATFORM 22
3.2.1.1 INSTALLING AMH-38 23
3.2.1.2 INSTALLING AMH-100 24
3.2.2 REMOVING THE AMH MASS HANDLER FROM THE PG7000 PLATFORM 25
3.2.2.1 REMOVING AMH-38 25
3.2.2.2 REMOVING AMH-100 25
3.2.3 REGULAR MASS TO PRESSURE OR PRESSURE TO MASS OPERATION 26
3.2.4 DIRECT CONTROL OF AMH FUNCTIONS 26
3.2.5 MAKING AND BREAKING THE REFERENCE VACUUM (AMH-38 ONLY) 27

© 2009 DH Instruments, a Fluke Company

원문: Fluke Calibration PG7000-AMH 메뉴얼(영문) · 제조사 원문 자료입니다. 사양은 제조사 사정에 따라 변경될 수 있습니다.

3.2.6 ACCESSING THE PG7000 PISTON-CYLINDER MODULE 27
3.2.7 INDICATOR LED....27
3.2.8 ERROR MESSAGES 28

4. REMOTE OPERATION 31

4.1 OVERVIEW 31

5. MAINTENANCE AND ADJUSTMENTS 33

5.1 MAINTENANCE 33

6. TROUBLESHOOTING 35

7. WARRANTY STATEMENT 37

7.1 WARRANTY STATEMENT 37

© 2009 DH Instruments, a Fluke Company

원문: Fluke Calibration PG7000-AMH 메뉴얼(영문) · 제조사 원문 자료입니다. 사양은 제조사 사정에 따라 변경될 수 있습니다.

TABLES

Table 1. AHM-38 Parts List 5
Table 2. AHM-100 Parts List 6
Table 3. Drive Air Pressure Requirement by Mass Set 7
Table 4. AMH Errors 28

FIGURES

Figure 1. AMH-38 Automated Mass Handler 2
Figure 2. AMH-100 Automated Mass Handler 3
Figure 3. Connecting PG7000 to AMH 12
Figure 4. Piston Cap Inspection 14
Figure 5. Piston Cap/Bell Testing 14
Figure 6. Piston-Cylinder Module Piston Stop Bushing 15
Figure 7. AMH Mass Set 16
Figure 8. AMH Schematic/Operating Principle 21
Figure 9. AMH Installation on PG7000 Platform 23

© 2009 DH Instruments, a Fluke Company

원문: Fluke Calibration PG7000-AMH 메뉴얼(영문) · 제조사 원문 자료입니다. 사양은 제조사 사정에 따라 변경될 수 있습니다.

TS-TL-FLK-096

we measure, we calibrate, we validate.
㈜테솔 · www.tessol.com TS-TL-FLK-096 5 / 46
KOLAS 국제공인교정기관 · ISO/IEC 17025

NOTES

원문: Fluke Calibration PG7000-AMH 메뉴얼(영문) · 제조사 원문 자료입니다. 사양은 제조사 사정에 따라 변경될 수 있습니다.

ABOUT THIS MANUAL

This manual is designed to be used in conjunction with the PG7000 Piston Gauges Manual, to assist in the set up, operation and maintenance of an AMH-38 or AMH-100 automated mass handling system.

Manual Conventions

(CAUTION) is used in throughout the manual to identify user warnings and cautions.

(NOTE) is used throughout the manual to identify operating and applications advice and additional explanations.

© 2009 DH Instruments, a Fluke Company

원문: Fluke Calibration PG7000-AMH 메뉴얼(영문) · 제조사 원문 자료입니다. 사양은 제조사 사정에 따라 변경될 수 있습니다.

we measure, we calibrate, we validate.
KOLAS 국제공인교정기관 · ISO/IEC 17025

NOTES

원문: Fluke Calibration PG7000-AMH 메뉴얼(영문) · 제조사 원문 자료입니다. 사양은 제조사 사정에 따라 변경될 수 있습니다.

1. INTRODUCTION

1.1 PRODUCT OVERVIEW

AMH-38 and AMH-100 are automated mass handling systems for PG7000 piston gauges. The AMH system allows mass values to be loaded and unloaded automatically in response to mass or pressure entries from the PG7000 terminal or over the PG7000's COM1 or IEEE-488 interface.

The AMH system lifts the masses off the PG7000 piston, selects the masses to be loaded, and places the selected masses back onto the piston. This is accomplished using pneumatic and electrical actuation hardware.

The AMH must be used with a special AMH mass loading bell and mass set. Manipulation of conventional manual masses cannot be automated.

Both AMH models are accessories to PG7000 Platforms that can be used with an existing manual system or delivered as part of a new system. Some older PG7000 Platforms require modification before they can accept the AMH system. Please consult **DHI** or your DHI representative to determine if an existing PG7000 Platform is AMH ready.

AMH-38 is compatible with PG7601 and PG7607 Platforms and handles a mass set of nominally 13, 25 or 38 kg. It includes a vacuum chamber for the establishment of a vacuum reference around the masses when operating in absolute by vacuum mode.

AMH-100 is compatible with PG7201, PG7202, PG7302 and PG7307 Platforms and handles a mass set of nominally 40, 60, 80 or 100 kg. It does not include a vacuum chamber so the masses are always in ambient pressure conditions.

© 2009 DH Instruments, a Fluke Company

원문: Fluke Calibration PG7000-AMH 메뉴얼(영문) · 제조사 원문 자료입니다. 사양은 제조사 사정에 따라 변경될 수 있습니다.

we measure, we calibrate, we validate.
KOLAS 국제공인교정기관 · ISO/IEC 17025

1.2 LOCATION AND DESCRIPTION OF THE COMPONENTS

1.2.1 AMH-38

FRONT REAR

1. KF-40 vacuum connections (2)
2. Lifting handles (2)
3. Mass lifter and pneumatic actuation solenoid valves
4. Vacuum bell jar (delivered with PG7601 Platform)
5. AMH status indication LED
6. RS232 Port, COM1
7. DC power connection
8. Drive air pressure connection
9. Drive vacuum connection

Figure 1. AMH-38 Automated Mass Handler

© 2009 DH Instruments, a Fluke Company

원문: Fluke Calibration PG7000-AMH 메뉴얼(영문) · 제조사 원문 자료입니다. 사양은 제조사 사정에 따라 변경될 수 있습니다.

1.2.2 AMH-100

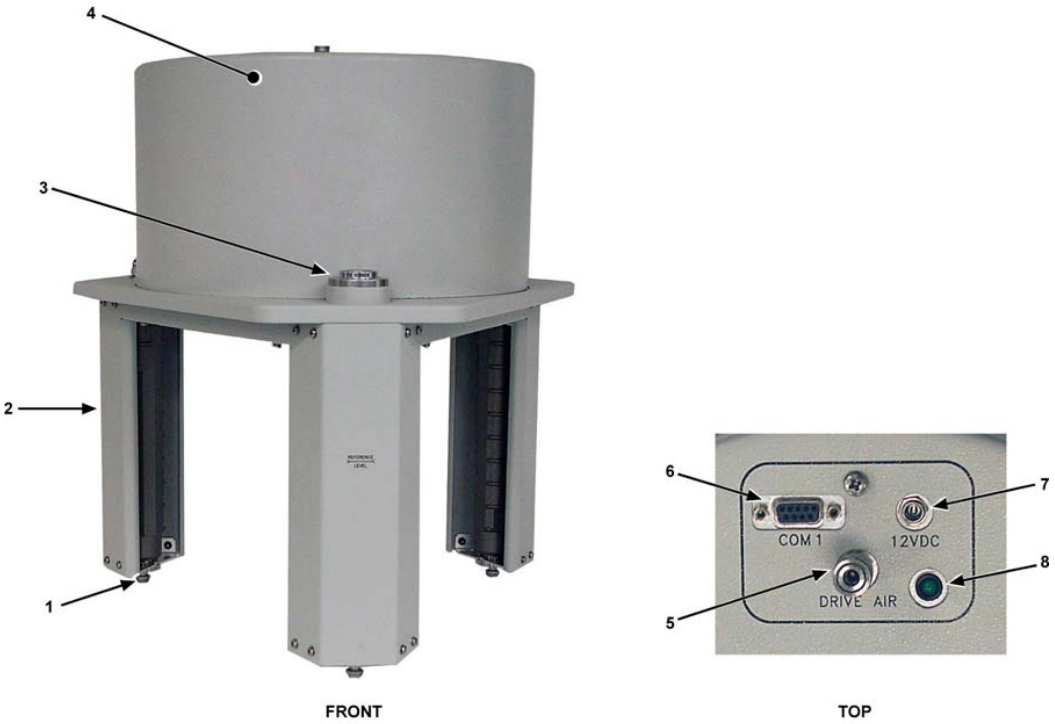

1. Platform engagement foot
2. Main mass manipulation column
3. Bubble level
4. Mass lifter and pneumatic actuation cover
5. Drive air pressure connection
6. RS232 Port, COM1
7. DC power connection
8. AMH status indication LED

Figure 2. AMH-100 Automated Mass Handler

© 2009 DH Instruments, a Fluke Company

원문: Fluke Calibration PG7000-AMH 메뉴얼(영문) · 제조사 원문 자료입니다. 사양은 제조사 사정에 따라 변경될 수 있습니다.

1.3 SPECIFICATIONS

Power Requirements:		15 VDC @ 2 A, 30 W max. consumption
Operating Temperature:		15 to 35 ºC
Dimensions:	AMH-38:	41 cm H x 37 cm W x 38 cm D (16.3 in. x 14.6 in. x 15 in.)
	AMH-100:	41 cm H x 41 cm W x 36 cm D (16.3 in. x 16.1 in. x 14.1 in.)
Weight:	AMH-38:	18 kg (40 lbs)
	AMH-100:	12 kg (25 lbs)
Communications:		RS232 (COM1)
Drive Air Supply:	AMH-38:	275 kPa (40 psi), ± 10%, minimal flow
	AMH-100:	550 kPa (80 psi), ± 10%, minimal flow
Vacuum Supply:	AMH-38 only:	At least 50 kPa (7.5 pi) under atmosphere, minimal flow
Pressure Connections:	Pressure:	Quick connector equivalent to Swagelok QM Series (QM2-B-200), Use with DESO (double end shut off) type stem
	Vacuum:	Quick connector equivalent to Swagelok QM Series (QM2-B-200), Use with SESO (single end shut off) type stem only.
CE conformance:		Available, must be specified

Due to a policy of continuous product improvement, all specifications are subject to change without notice.

© 2009 DH Instruments, a Fluke Company

원문: Fluke Calibration PG7000-AMH 메뉴얼(영문) · 제조사 원문 자료입니다. 사양은 제조사 사정에 따라 변경될 수 있습니다.

2. Preparation for Operation

2.1 UNPACKING AND INSPECTION

AMH-38 and AMH-100 are delivered, along with their standard accessories, in a corrugated container with foam cut outs to hold items in place.

Remove all parts from the shipping box. Be sure not to lose or discard the Accessory Kit.

Inspect all parts for damage. If damage is noted, report it to your Shipping & Receiving Department and the delivering carrier for appropriate action.

Inspect for any missing components or accessories referring to Table 1 for AMH-38 or Table 2 for AMH-100. Should any items be missing, contact **DHI** or your local **DHI** representative.

Table 1. AHM-38 Parts List

DESCRIPTION		PART #
1 ea.	AHM-38 Automated Mass Handler	3071416 or 3072418
Accessory kit including:		**3121689 or 3121704**
1 ea.	Operation and Maintenance Manual	3509389
1 ea.	Power/COMM Cable	3451784
2 m.	1/8 in. PFA tubing	3232357
2 m.	1/4 in. PFA tubing	3232378
1 ea.	Adaptor, 1/8 in. Swage x 1/4 in. NPT M	3135780
1 ea.	Tee, 1/4 in. Swage	3134453
1 ea.	Port Connector, 1/4 in. Swage	3135090
1 ea.	Quick Connector Stem, 1/8 in. Swage DESO (with red band)	3123691
1 ea.	Assembly: SESO Quick Connector Stem and Valve	3121719
4 ea.	Cable Tie, Hook and Loop	2008964
1 ea.	Tool, 3 mm Hex Wrench (with T handle)	3141776
1 ea.	O-ring, Viton, 2-273	3141923
1 ea.	Adaptor, 1/4 in. Swage x 1/4 in. NPT M	3134427

© 2009 DH Instruments, a Fluke Company

원문: Fluke Calibration PG7000-AMH 메뉴얼(영문) · 제조사 원문 자료입니다. 사양은 제조사 사정에 따라 변경될 수 있습니다.

we measure, we calibrate, we validate.
KOLAS 국제공인교정기관 · ISO/IEC 17025
㈜테솔 · www.tessol.com TS-TL-FLK-096 13 / 46

TESSOL Technical Library
TS-TL-FLK-096

Table 2. AHM-100 Parts List

DESCRIPTION		PART #
1 ea.	AHM-100 Automated Mass Handler	3071425 or 3072429
Accessory kit including:		**3121728 or 3121737**
1 ea.	Operation and Maintenance Manual	3509389
1 ea.	Power/COMM Cable	3451784
2 m.	1/8 in. PFA tubing	3232357
1 ea.	Adaptor, 1/8 in. Swage x 1/4 in. NPTM	3135780
1 ea.	Quick Connector Stem, 1/8 in. Swage DESO (with red band)	3123691
4 ea.	Cable Tie, Hook and Loop	2008964
1 ea.	Tool, 3 mm Hex Wrench (with T handle)	3141776
1 ea.	Tool, 2.5 mm Hex Wrench (with straight handle)	3136044
1 ea.	Dust Cover	3142001

© 2009 DH Instruments, a Fluke Company

원문: Fluke Calibration PG7000-AMH 메뉴얼(영문) · 제조사 원문 자료입니다. 사양은 제조사 사정에 따라 변경될 수 있습니다.

2.2 SITE REQUIREMENTS

2.2.1 SITE

General site requirements are the same as for PG7000 piston gauge platforms (see the PG7000 Operation and Maintenance Manual).

When planning the site for use of AMH, consider that the AMH mass handler will occasionally be removed from the PG7000 Platform. A convenient place to put it down when it is removed should be planned. In addition, it is more convenient to leave the pressure, power and other utilities connected to the AMH when removing it so consider the length and path of these lines.

2.2.2 GAS SUPPLIES

AMH-38 requires a compressed air source and a vacuum source (see Sections 2.2.2.1, 2.2.2.2).

AMH-100 requires a compressed air source only (see Section 2.2.2.1).

2.2.2.1 DRIVE AIR SUPPLY

The drive air supply provides power to operate the mass lifter and the binary mass selector pins (see Section 3.1).

Drive air requirements are:

Flow rate: Very low, avoid restrictions or excessive length of connecting tubing

Cleanliness: If air from a compressor is used it should be filtered and dried, preferably with a filter regulator with a coalescing filter. The recommendation is for a 5-micron filter upstream of a 0.01-micron coalescing filter. The main concern is the elimination of humidity, which could corrode the AMH pneumatic controls.

Drive air pressures required (± 10%) for different mass sets are listed in Table 3:

Table 3. Drive Air Pressure Requirement by Mass Set

MODEL	MASS SET	DRIVE AIR [kPa (psi)]
AMH-38	MS-AMH-13	275 (40)
AMH-38	MS-AMH-25	275 (40)
AMH-38	MS-AMH-38	275 (40)
AMH-100	MS-AMH-40	275 (40)
AMH-100	MS-AMH-60	380 (55)
AMH-100	MS-AMH-80	450 (65)
AMH-100	MS-AMH-100	550 (80)

Do not operate AMH with drive pressure lower than 275 kPa (40 psi). Damage to the AMH could result.

© 2009 DH Instruments, a Fluke Company

원문: Fluke Calibration PG7000-AMH 메뉴얼(영문) · 제조사 원문 자료입니다. 사양은 제조사 사정에 따라 변경될 수 있습니다.

we measure, we calibrate, we validate.
㈜테솔 · www.tessol.com TS-TL-FLK-096 15 / 46
KOLAS 국제공인교정기관 · ISO/IEC 17025

TS-TL-FLK-096

2.2.2.2 VACUUM SUPPLY (AMH-38 ONLY)

The vacuum supply is necessary for AMH-38 operation when there is vacuum in the AMH-38 vacuum chamber and bell jar (absolute by vacuum mode PG7601 operation). The vacuum supply assures that the binary mass selection pins remain in the correct position and evacuates internal AMH volumes to minimize the likelihood of leaks into the reference vacuum.

The vacuum pump or vacuum supply for the pressure controller of the PG7601 system can be used for the AMH-38 vacuum supply.

Vacuum drive requirements are:

Flow rate: Very low, avoid restrictions or excessive length of connecting tubing

Vacuum pressure: At least 50 kPa (7.5 psi) under atmosphere

Do not operate AMH-38 when using a PG7601 in "absolute by vacuum" mode without having a vacuum supply connected to AMH-38. Always check that AMH-38 is supplied with vacuum before establishing reference vacuum in the AMH-38 vacuum chamber. Failure to do so may result in damage to the binary mass pins and/or binary masses.

Do not plug the AMH drive vacuum connection. Use only a "SESO" type quick-connector stem. Plugging the AMH drive vacuum connection will cause serious damage to AMH internal components.

원문: Fluke Calibration PG7000-AMH 메뉴얼(영문) · 제조사 원문 자료입니다. 사양은 제조사 사정에 따라 변경될 수 있습니다.

2.3 SETTING UP THE AMH FOR OPERATION

2.3.1 GENERAL CONSIDERATIONS

AMH-100 requires only three connections: drive air supply, electrical power, and RS232 cable for communications with PG7000 Platform. Consider these connections when setting up the AMH-100.

AMH-38 requires at least three connections: drive air supply, electrical power, and RS232 cable for communications with PG7000 Platform. If the PG7000 on which the AMH-38 is installed will be operated with a vacuum in the vacuum chamber, a drive vacuum connection is also required. AMH-38 includes two KF40 connections that may be used for connection of a vacuum pump and/or of an external vacuum gauge.

The AMH mass handler is removed from the PG7000 Platform to access the piston-cylinder. Ease of removal and manipulation of the AMH should be considered in making the various utility connections. In addition, a safe and convenient location to put it down when it is removed should be planned.

2.3.2 SETTING UP THE AMH

To setup the AMH for operation, place the AMH bottom down on a sturdy, flat surface. Do not install it on the PG7000 Platform until the AMH mass set has been installed and the AMH itself has been it has been started up (see Section 2.7).

The setup of the AMH can be broken down into 6 steps:

- Connecting the drive air supply (see Section 2.3.2.1)
- Connecting the drive vacuum supply (AMH-38 only) (see Section 2.3.2.2)
- Connecting electrical power (see Section 2.3.2.3)
- Connecting PG7000 Platform communications (see Section 2.3.2.4).
- Connecting the reference vacuum supply (AMH-38 only) (see Section 2.3.2.5)
- Connecting an external vacuum gauge (AMH-38 only) (see Section 2.3.2.6).

There are two KF-40 pass throughs on the rear of the AMH-38 vacuum chamber for electrical and pressure connections to the inside of the chamber. These are not intended to be loosened or removed by the user. Only qualified service personnel should loosen the KF- 40 pass through connections on the AMH-38 vacuum chamber.

2.3.2.1 CONNECTING THE DRIVE AIR SUPPLY

The AMH accessories kit includes hardware to facilitate the connection of the drive air supply (see Tables 1, 2). Locate the drive air connection accessories including:

- Quick-connector stem (DESO type with red band).
- 2 m 1/8 in. O.D. clear PFA tubing.
- 1/8 in. Swage x 1/4 in. NPT M adaptor.

© 2009 DH Instruments, a Fluke Company

원문: Fluke Calibration PG7000-AMH 메뉴얼(영문) · 제조사 원문 자료입니다. 사양은 제조사 사정에 따라 변경될 수 있습니다.

we measure, we calibrate, we validate.
KOLAS 국제공인교정기관 · ISO/IEC 17025

To use the supplied accessories to make the AMH drive air supply connection proceed as follows:

❶ Connect the quick-connector to one end of the PFA tube. Loosen the 1/8 in. Swage nut on the assembly slightly. Slip the PFA tube into the nut until it stops. Tighten the nut to swage the tube.

❷ Connect the other end of the PFA tube to an appropriate drive air supply (see Section 2.2.2.1). If desired, use the 1/8 in. Swage x 1/4 in. NPT M adaptor.

❸ Insert the quick-connector stem into the drive air connection quick-connector (top connector, color coded with red band). Press firmly until the stem clicks into place.

❹ Apply drive air pressure to the connection and check for leaks.

The quick-connector stem seals when disconnected so the drive air supply may be applied before the quick-connector stem is inserted into the quick-connector.

Do not operate AMH with drive pressure lower than 275 kPa (40 psi). Damage to the AMH could result.

원문: Fluke Calibration PG7000-AMH 메뉴얼(영문) · 제조사 원문 자료입니다. 사양은 제조사 사정에 따라 변경될 수 있습니다.

2.3.2.2 CONNECTING THE DRIVE VACUUM SUPPLY (AMH-38 ONLY)

The AMH-38 accessories kit includes hardware to facilitate the connection of the drive vacuum supply (see Table 1). Locate the drive vacuum connection accessories including:

- Quick-connector stem (with blue band) and three way sleeve valve assembly.
- 2 m 1/4 in. O.D. PFA tubing.
- 1/4 in. Swage x 1/4 in. NPT M adaptor.
- 1/4 in. Swage tee and 1/4 in. Swage Port Connector.

To use the supplied accessories to make the AMH drive vacuum supply connection proceed as follows:

❶ Connect the blue banded quick-connector/sleeve valve assembly to one end of the PFA tube. Loosen the 1/4 in. Swage nut on the assembly slightly. Slip the PFA tube into the nut until it stops. Tighten the nut to swage the tube.

❷ Connect the other end of the PFA tube to an appropriate vacuum supply (see Section 2.2.2.2). If desired, use the 1/4 in. Swage x 1/4 in. NPT M adaptor and/or the 1/4 in. Swage Tee and Port Connector. The Tee and Port Connector are particularly useful if the vacuum supply is from a DHI PPC/MPC Vacuum Kit. Install the Tee on the vacuum pump side of the PFA tube between the vacuum pump and the PPC or MPC, or where the vacuum tube connects to the PPC or MPC.

❸ Insert the quick-connector stem into the drive vacuum connection quick-connector (color coded with blue band). Press firmly until the stem clicks into place. Use only a “SESO” type stem (not self sealing).

❹ Check that the three-way sleeve valve is in the GAUGE position (drive vacuum not applied to the AMH-38). Apply drive vacuum and check for leaks.

⚠ *Do not plug the AMH drive vacuum connection. Use only a “SESO” type quick-connector stem. Plugging the AMH drive vacuum connection will cause serious damage to AMH internal components.*

⚠ *A drive vacuum supply must be connected to AMH-38 when using a PG7601 in “absolute by vacuum” mode. Always check that AMH-38 is supplied with drive vacuum before establishing reference vacuum in the AMH-38 vacuum chamber. Failure to do so may result in damage to the binary mass pins and/or binary masses.*

2.3.2.3 CONNECTING ELECTRICAL POWER

Connect the electrical power to the power connector on the AMH. Use the supply pack provided in the AMH accessories. Power supply to the pack is 100 – 240V, 50/60 Hz.

When power is connected, the green LED near the electrical connector should light and not flash. If the LED flashes, see Section 3.2.7. If the LED doesn’t light, and you are sure power is connected, contact your DHI Authorized Service Provider.

© 2009 DH Instruments, a Fluke Company

원문: Fluke Calibration PG7000-AMH 메뉴얼(영문) · 제조사 원문 자료입니다. 사양은 제조사 사정에 따라 변경될 수 있습니다.

we measure, we calibrate, we validate.
㈜테솔 · www.tessol.com TS-TL-FLK-096 19 / 46
KOLAS 국제공인교정기관 · ISO/IEC 17025

TS-TL-FLK-096

2.3.2.4 CONNECTING PG7000 PLATFORM COMMUNICATIONS

Locate the PG to AMH cable delivered with the AMH accessories.

Connect the 5 pin circular connector to PG's AMH port. (2)

Connect D-sub connector to the AMH COM1 port. (1)

Connect circular plug to the AMH powerjack. (5)

1. D-sub connector to AMH COM1 port
2. 5 pin circular connector to PG's AMH port
3. AMH-38 Automated Mass Handler
4. PG7000 Platform
5. Circular plug to AMH powerjack

Figure 3. Connecting PG7000 to AMH

2.3.2.5 CONNECTING A REFERENCE VACUUM SUPPLY (AMH-38 ONLY)

The AMH-38 vacuum chamber is equipped with two KF-40 vacuum connections. One of these may be used as an alternate to the KF-25 connection built-in to the PG7601 platform (see the PG7000 Operation and Maintenance Manual). This may be desirable when a very low reference vacuum is desired, for example when using a turbo molecular pump.

원문: Fluke Calibration PG7000-AMH 메뉴얼(영문) · 제조사 원문 자료입니다. 사양은 제조사 사정에 따라 변경될 수 있습니다.

To use the KF-40 connection on the AMH-38 for the vacuum reference supply, use a KF-40 vacuum hose. Plug the platform's KF-25 connection. Consider the need to shut-off the vacuum supply when vacuum is not desired in the vacuum chamber and the need to remove the AMH-38 from the PG7601 Platform to access the piston-cylinder module or the mass set.

2.3.2.6 CONNECTING AN EXTERNAL REFERENCE VACUUM GAUGE (AMH-38 ONLY)

The AMH-38 vacuum chamber is equipped with two KF-40 vacuum connections. One of these may be used to connect an external vacuum gauge as an alternate to the vacuum gauge built-in to the PG7601 platform. This may be desirable to measure the reference vacuum with lower measurement uncertainty that the PG7601's internal vacuum gauge.

See the PG7000 Operation and Maintenance Manual for information on using an external vacuum gauge to measure reference vacuum pressure.

2.4 PREPARING THE PG7000 PLATFORM

2.4.1 PREPARING PG7102, PG7202, PG7302 PLATFORM HARDWARE FOR AMH-100

Most PG7102, PG7202 and PG7302 Platforms delivered after 2004, January 1, are AMH ready. AMH ready platforms have three machined holes in the top surface of the base casting to seat the AMH-100 legs.

To prepare the AMH ready platform, loosen the three set screws on the sides of the base casting until the screw is just past flush with the side (2.5 mm allen wrench). Remove the two black plastic caps and the bubble level assembly, exposing the AMH-100 seating holes. When AMH-100 is used, the bubble level on the AMH-100 center plate is used to level the PG7000 system. Retain the casting level in case of future use of the platform without the AMH accessory.

If your PG7102, PG7202 or PG7302 does not have the three AMH leg holes on the top surface, the based casting must be replaced before AMH can be used with the platform. Contact **DHI** or your local **DHI** representative.

2.4.2 PREPARING PG7601 PLATFORM HARDWARE FOR AMH-38

The vacuum plate of an AMH ready PG7601 must be inspected for damage prior to attempting to install AMH-38. The AMH-38 vacuum chamber fits over the outside diameter of the vacuum plate. Displaced material from dents or dings on the outside corner of the plate could increase the effective diameter making it difficult or impossible for the AMH-38 vacuum chamber to fit over the plate. Inspect the outside diameter of the vacuum plate. Remove any material on the outside surface and return to a finish of approximately 0.8 micrometers or better. If you are not comfortable performing this task with in-house capabilities, contact an Authorized DHI Service Provider.

© 2009 DH Instruments, a Fluke Company

원문: Fluke Calibration PG7000-AMH 메뉴얼(영문) · 제조사 원문 자료입니다. 사양은 제조사 사정에 따라 변경될 수 있습니다.

we measure, we calibrate, we validate.
㈜테솔 · www.tessol.com TS-TL-FLK-096 21 / 46
KOLAS 국제공인교정기관 · ISO/IEC 17025

TS-TL-FLK-096

2.5 CHECKING THE PG7000 PISTON-CYLINDER MODULES FOR AMH OPERATION

2.5.1 CHECKING THE PISTON CAP

The AMH mass handler lifts the mass loading bell completely off of the piston and lowers it back down each time the mass load is changed. When adding AMH to an existing PG7000 system, it is important to check the outer circumference of the piston cap for displaced material from dents or dings that might interfere with the free removal and replacement of the bell. In this case, in particular, when the bell is lowered back onto the piston with little or no additional mass, the weight of the bell alone may not cause it to seat properly on the piston cap, which could cause poor performance.

Before using AMH with existing piston-cylinder modules, examine the outside circumference of the piston cap (see Figure 4). Remove any material on the outside surface and return to a finish of approximately 0.8 micrometers or better. Note that the piston mass is a calibrated value so after removing material, the mass should be redetermined. Also, apply and wipe off a very thin film of Krytox® lubricant on the inside surface of the top of the mass loading bell where it contacts the outside perimeter of the piston cap (a tube of Krytox lubricant is included in the PG7000 Platform accessories). If you are not comfortable performing this task with in-house capabilities, contact an Authorized DHI Service Provider.

Test the piston-cylinder modules with the AMH mass set bell. To do this, install the piston-cylinder module and binary mass carrier on the PG7000 Platform (see the PG7000 Operation and Maintenance manual). Then slip the AMH mass bell down over the binary mass carrier. The bell should seat smoothly and easily. If you push the bottom of the seated bell to one side, it should naturally and easily fall back to its normal seated position (see Figure 5). If the bell does not seat easily and/or does not reseat naturally when pushed to one side, there is likely to be difficulty operating AMH with the piston. If this cannot be corrected locally, the piston-cylinder module should be returned to a DHI Authorized Service Provider.

Figure 4. Piston Cap Inspection

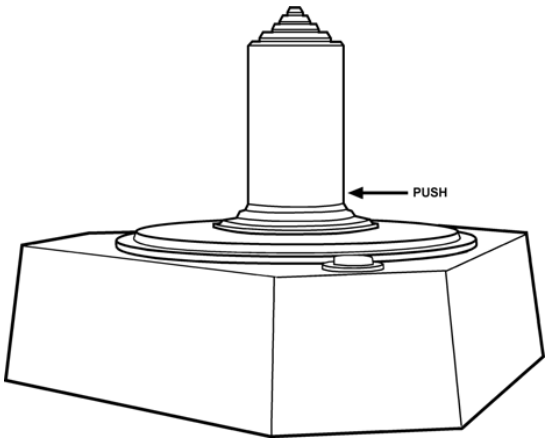

Figure 5. Piston Cap/Bell Testing

2.5.2 CHECKING PISTON STOP BUSHING

원문: Fluke Calibration PG7000-AMH 메뉴얼(영문) · 제조사 원문 자료입니다. 사양은 제조사 사정에 따라 변경될 수 있습니다.

we measure, we calibrate, we validate.
KOLAS 국제공인교정기관 · ISO/IEC 17025

Piston-cylinder modules used with AMH must be equipped with the newer style of piston stop bushing that is threaded and made of white or cream colored, static dissipative acetal. Before using a PG7000 piston-cylinder module with AMH, inspect the piston stop bushing (see Figure 6). Verify that the bushing is made of the required white or cream-colored material. Black bushings must be replaced before the piston-cylinder module is used with AMH. Contact a your DHI representative or a DHI Authorized Service Provider for assistance.

To view the piston stop bushing, the piston cap must be removed. See the PG7000 Operation and Maintenance Manual; Piston-Cylinder Modules, Disassembly, Cleaning and Maintenance.

Figure 6.
Piston-Cylinder Module
Piston Stop Bushing

2.6 INSTALLING THE AMH MASS SET

PG7000 AMH masses are shipped in reusable, molded shipping and storage cases. One of the cases contains the binary masses, binary mass carrier, mass bell and lifting shaft/trim mass tray. The other cases contain the main masses of 6.2 (AMH-38) or 10 kg (AMH-100) (see PG7000 Operation and Maintenance Manual, Inspecting Contents, Mass Set for mass set composition detail). Each mass is packed in a sealed plastic bag and then placed in a protective shipping insert.

⚠ *The stability over time of PG7000 pressure measurements is a function of the stability of the masses loaded on the piston. Precautions should be taken in handling the masses to minimize influences that may change their mass. This includes always wearing protective gloves when handling the masses to avoid contaminating them with body oils and perspiration. Protective gloves are provided in the accessory kits of PG7000 Platforms.*

To install the AMH mass set, follow the order of operation below carefully (refer to Figure 7):

❶ **Prepare the masses:** Open the shipping cases and remove all the masses and mass set elements from their plastic bags.

❷ **Install a piston-cylinder module in the PG7000 Platform:** See the PG7000 Operation and Maintenance Manual, Installing a Piston-Cylinder Module Into the Platform.

❸ **Install the binary mass carrier:** Place the pyramidal shaped carrier on top of the piston cap.

❹ **Install the mass loading bell:** Slip the mass loading bell over the binary mass carrier and slide it down until the inside top of the bell sits on the binary mass carrier.

❺ **Install the main mass discs:** Load the main mass discs (6.2 kg each with AMH-38, 10 kg each with AMH-100) onto the mass bell **starting with mass #1 and loading in sequential order**. Mass #1 should be at the bottom of the stack and the highest number mass at the top. The mass sequence numbers are lazer marked on the top surface of each mass. Pass the mass disc over and down the mass loading bell and center it on the ledge at the bottom of the bell. Load the rest of the main masses, sequentially, onto the bottom mass.

❻ **Install the binary mass tubes:** Load the binary mass tubes concentrically from the largest to smallest, outside to inside. The largest, long tubes slip down between the main mass stack and the bell and rest on the ledge at the bottom of the mass bell. The smaller masses load onto the pyramidal steps of the binary mass carrier.

© 2009 DH Instruments, a Fluke Company

원문: Fluke Calibration PG7000-AMH 메뉴얼(영문) · 제조사 원문 자료입니다. 사양은 제조사 사정에 따라 변경될 수 있습니다.

we measure, we calibrate, we validate.
㈜테솔 · www.tessol.com TS-TL-FLK-096 23 / 46
KOLAS 국제공인교정기관 · ISO/IEC 17025

TS-TL-FLK-096

❼ **The mass loading process is complete:** The mass set is in the all loaded position. The mass lifting shaft/trim mass tray assembly is not yet installed. It will be attached after the AMH autmomated mass handler is installed over the masses on the platform.

❽ **Create the mass set and mass loading bell in the PG Terminal:** See the PG7000 Operation and Maintenance Manual, Add Mass Set and Add Mass Loading Bell Sections.

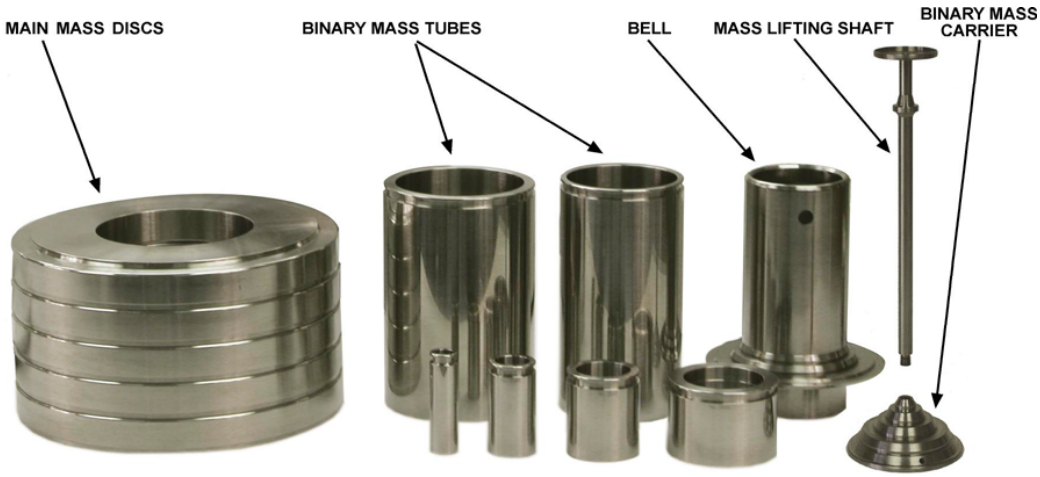

SHOWN IS THE MS-AMH-38 MASS SET FOR THE AMH-38 MASS HANDLER. SMALLER MASS SETS MAY INCLUDE LESS MAIN MASS DISCS. MASS SETS FOR THE AMH-100 MASS SET ARE IDENTICAL TO AMH-38 BUT THE MAIN MASSES ARE LARGER 10 KG DISCS AND A 7TH BINARY MASS TUBE OF 6.2 KG IS INCLUDED.

Figure 7. AMH Ma ssSet

원문: Fluke Calibration PG7000-AMH 메뉴얼(영문) · 제조사 원문 자료입니다. 사양은 제조사 사정에 따라 변경될 수 있습니다.

2.7 INITIAL START UP/VERIFICATION

Perform the initial verification of the AMH mass loading system with the AMH sitting on a flat surface next to the PG7000 Platform. Do not install the AMH onto the platform until steps ❶ through ❹ below have been completed.

To verify the AMH mass handler prior to installing it on the PG7000 Platform, proceed as follows:

❶ **Make the necessary pressure, power and communications connections:** Complete the set up procedure described in Section 2.3.2. Do not open the valve to apply vacuum to the AMH-38 until a vacuum is being established in the vacuum chamber.

⚠ *Do not operate AMH with drive pressure lower than 275 kPa (40 psi). Damage to the AMH could result.*

---

❷ **Insert the mass lifting shaft into the AMH:** Insert the shaft into the hole in the center of the AMH mass lifter and slide it down until the trim mass tray sits on the top of the lifter. This arrangement trips the AMH's internal proximity sensor allowing the AMH system to be operated off of the PG7000 Platform without an actual mass load.

❸ **Select an AMH mass set and mass bell as the active mass set and bell for the PG7000**: This step can be skipped if the AMH mass set and bell have already been selected, if so go directly to step ❹. On the PG Terminal, press **[SPECIAL]**, **<1PC/MS>**, **<3mass bell>**, **<5select>** and select the mass bell of the AMH mass set. Using **[SPECIAL]**, **<1PC/MS>**, **<2mass set>**, **<5select>**, select an AMH mass set (mass set designated by S/N nnnnA). Selecting the AMH mass set causes the PG7000 Platform to attempt to establish communication with the AMH system. If the communication fails, an error message occurs (see Sections 3.2.8, 6).

If communication succeeds, the PG7000 initializes the AMH mass handler. The trim mass tray should rise approximately 2.5 cm (1 in.) above the top of the lifter; followed by the sound of the main mass selection columns rotating. Then the trim mass tray should be lowered back down. The steps of this procedure are commented on the PG Terminal display as they execute. If the sequence does not complete and/or any error messages are observed, see Section 6 and Table 4 for troubleshooting assistance. If the sequence completes, the AMH system has been cleared and put into a known state in which all mass holding ledges and pins are retracted so that it can safely be slipped down over the AMH mass set and installed on the PG7000 Platform.

The PG7000 Platform must be able to initialize the AMH system before start up can proceed.

❹ **Clear the AMH and test its operation:** Press **[SPECIAL]**, **<8AMH>**, **<2control>**, **<3loadall>**. The trim mass tray should rise approximately 2.5 cm (1 in.) above the top of the lifter, followed by the sound of the main mass selection columns rotating. Then the trim mass tray should be lowered back down. The steps of this procedure are commented on the PG Terminal display as they occur. If the sequence does not complete and/or any error messages are observed, see Section 6 and Table 4 for troubleshooting assistance. If the sequence completes, the AMH mass handler has been cleared and put into a known state in which all mass holding ledges and pins are retracted so that it can safely be slipped down over the mass set and installed on the PG7000 Platform.

If desired, visually inspect the condition of the AMH mass handler by carefully tipping the AMH to look inside. The main mass selection columns should have their all flat surfaces (no ledges) oriented towards the center and all binary mass selection pins should be retracted (see Section 3.1).

When this step is complete, the AMH mass handler is ready to be installed on the PG7000 Platform (see Section 3.2.1).

© 2009 DH Instruments, a Fluke Company

원문: Fluke Calibration PG7000-AMH 메뉴얼(영문) · 제조사 원문 자료입니다. 사양은 제조사 사정에 따라 변경될 수 있습니다.

we measure, we calibrate, we validate.
㈜테솔 · www.tessol.com TS-TL-FLK-096 25 / 46
KOLAS 국제공인교정기관 · ISO/IEC 17025

TS-TL-FLK-096

NOTES

원문: Fluke Calibration PG7000-AMH 메뉴얼(영문) · 제조사 원문 자료입니다. 사양은 제조사 사정에 따라 변경될 수 있습니다.

3. OPERATION

3.1 GENERAL OPERATING PRINCIPLES

Numerical reference in this section refers to Figure 8.

The purpose of the AMH-38 or AMH-100 system is to automatically load specified values of mass onto the PG7000 piston. This is accomplished by lifting the complete mass set up off and above the piston-cylinder to the mass selection position, selecting the individual masses to be loaded and retained, and then placing the masses to be loaded back onto the piston.

To accomplish the mass lifting, selection and lowering function, the AMH mass handler uses four main sub-systems. These systems are present in both the AMH-38 and AMH-100 models.

1. **Electronic and electrical controls(7):** The AMH electronic and electrical controls are located just above the mass lifter, under a protective cap. These support the AMH operating logic, a proximity sensor to detect mass load position, reading of the main mass selection column switches, operation of the column rotating motor and actuation of the pneumatic control solenoid valves.

2. **Mass lifter(8):** The mass lifter is used to lift the entire mass load to the mass selection position and then to lower the selected masses onto the piston. The mass lifter is pneumatically actuated. A flexible diaphragm(4) is connected to a lifting assembly(5). A three-way solenoid valve (e.g. 9) can be actuated to admit or exhaust drive air pressure to and from the volume under the diaphragm. Admitting drive pressure forces the lifting assembly up. Exhausting the pressure lowers it. With AMH-38, the pressure is exhausted outside the vacuum chamber, to the AMH drive vacuum supply when there is vacuum in the chamber.

   As the mass lifting assembly (5) rises, it engages a ledge on the mass lifting shaft(6), pushing it up. The mass lifting shaft is connected to the binary mass carrier(10) and the mass bell(1) sits on the binary mass carrier. As the mass lifting shaft goes up, it lifts the binary carrier and the bell, which in turn lifts the main masses(14) and the binary mass tubes(2). When the lifting assembly reaches the top of its stroke, the entire mass load is lifted completely off the piston cap(12) and the masses are in the mass selection position. In this position, the ledges on the main mass selection columns(13) align with the gaps between the main masses and the binary mass selector pins(e.g. 3) align with the holding grooves in the binary mass tubes. When gas is exhausted from the volume under the lifting assembly, it descends, lowering the selected masses onto the piston.

3. **Main mass disc selection columns(13):** The three main mass selection columns are used to retain the main mass discs(14) that are not to be loaded onto the piston. The columns are rotated synchronously by a DC motor and a drive belt(11). Contact switches are used to monitor the column position. Each column has a number of sides equal to the maximum number of main masses plus one (six sides for AMH-38, ten sides for AMH-100). One side, which retains all the masses so that none are loaded, has a ledge for each mass. Each subsequent side has one less ledge, moving from the bottom up. The last side has no ledges and is used to select all the main masses for loading. When the mass load is lifted to the mass selection position, the motor is operated to rotate the columns to retain the desired number of masses. The rest of the main masses are free and are lowered onto the piston when the lifting assembly descends.

© 2009 DH Instruments, a Fluke Company

원문: Fluke Calibration PG7000-AMH 메뉴얼(영문) · 제조사 원문 자료입니다. 사양은 제조사 사정에 따라 변경될 수 있습니다.

we measure, we calibrate, we validate.
㈜테솔 · www.tessol.com TS-TL-FLK-096 27 / 46
KOLAS 국제공인교정기관 · ISO/IEC 17025

TESSOL Technical Library
TS-TL-FLK-096

4. **Binary mass tube selection pins(3):** The binary mass selection pins are used to retain the binary mass tubes that are not to be loaded onto the piston. Three pins for each mass are located in a circular pattern around the top of each mass. The pins are pneumatically actuated and double acting. Two three-way solenoid valves(e.g. 9) control drive pressure to each set of three pins. One valve admits pressure to one side of the pin to extend it and the other admits pressure to the other side of the pin to retract it. Once the pins have been moved, the pressure is exhausted; the exhaust is to vacuum when there is vacuum in the vacuum chamber of AMH-38. When the mass load is lifted to the mass selection position, the pins are operated to retain the binary masses that are not to be loaded. The rest of the binary masses are free and are placed onto the piston when the lifting assembly descends.

Do not put your fingers or anything else beneath the AMH trim mass tray. AMH may lower up to 100 kg (220 lbs) onto anything that is under the trim mass tray. This could cause damage and/or injury.

© 2009 DH Instruments, a Fluke Company

원문: Fluke Calibration PG7000-AMH 메뉴얼(영문) · 제조사 원문 자료입니다. 사양은 제조사 사정에 따라 변경될 수 있습니다.

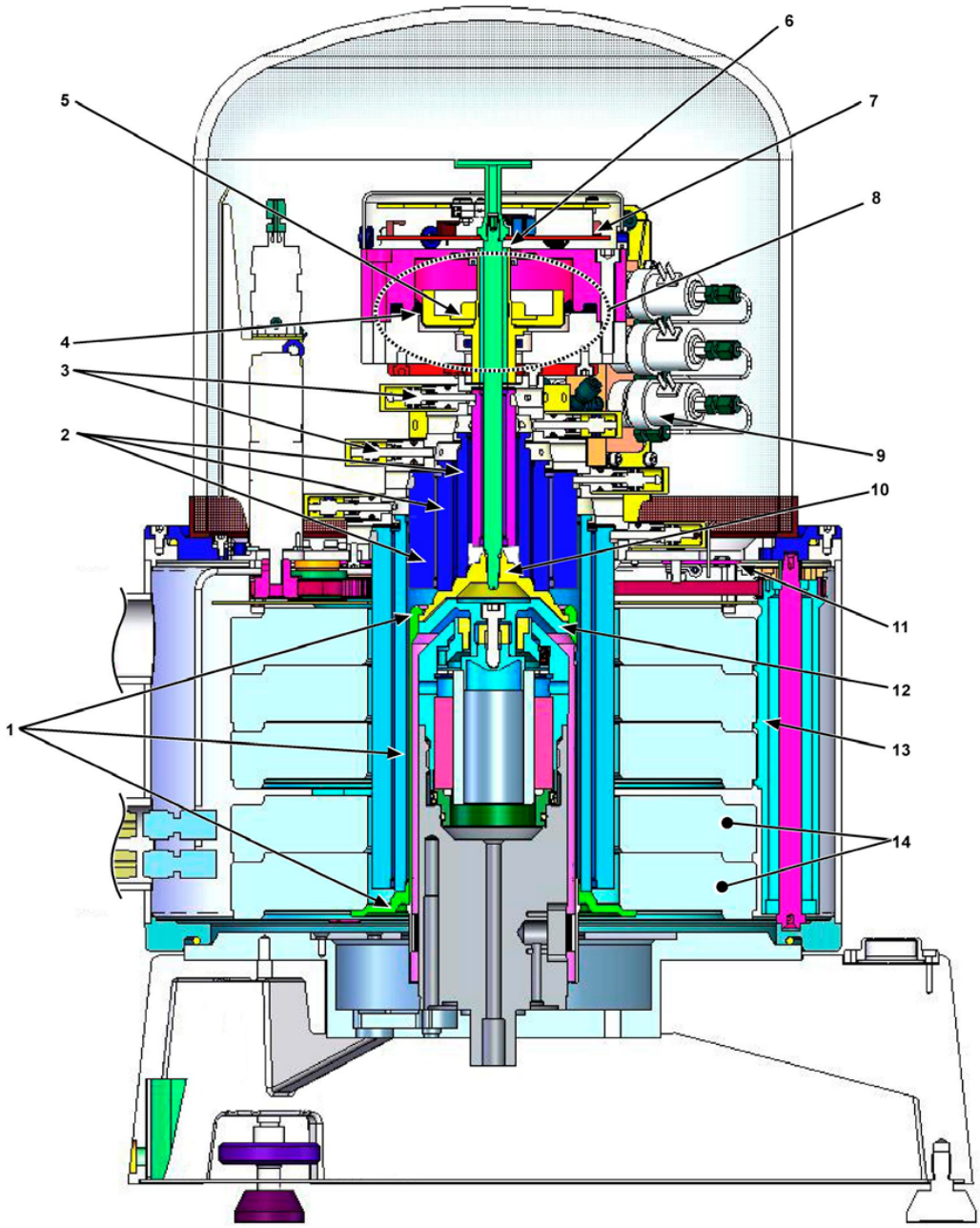

1. Mass loading bell
2. Binary mass tubes
3. Binary mass selection pins
4. Flexible diaphragm
5. Mass lifting assembly
6. Lifting ledge on mass lifting shaft
7. Electronics and electrical controls
8. Mass lifter
9. Solenoid valve
10. Binary mass carrier
11. Main mass column rotation belt
12. Piston cap
13. Main mass column
14. Main masses

Figure 8. AMH Schematic/Operating Principle

© 2009 DH Instruments, a Fluke Company

원문: Fluke Calibration PG7000-AMH 메뉴얼(영문) · 제조사 원문 자료입니다. 사양은 제조사 사정에 따라 변경될 수 있습니다.

3.2 OPERATION

Once the AMH mass set has been installed (see Section 2.6) and the AMH mass handling system has been initialized (see Section 2.7) and installed, regular operation of the AMH is controlled by the P7000 Platform in response to local commands entered on the PG Terminal or remote commands received over the PG7000 Platform's COM1 or IEEE-488 interface.

Generally, AMH operation is transparent to the operator. The AMH system changes the mass load on the piston automatically as needed when a pressure or mass load setting command is given to the PG7000. The AMH mass handler and mass set are removed only when it is necessary to access the piston-cylinder assembly, for example to change ranges.

Subsections of this section describe various aspects of AMH operation.

See Sections 3.2.1 and 3.2.2 for instructions on installing and removing the AMH mass handler.

See Section 3.2.3 for information on regular pressure to mass or mass to pressure operation.

See Section 3.2.4 for information on controlling the AMH mass handling system directly, outside of pressure to mass or mass to pressure operation.

See Section 3.2.5 for information on making and breaking the reference vacuum in AMH-38.

See Section 3.2.6 for information on accessing the piston-cylinder module when an AMH is installed.

See Section 2.3.7 and 3.2.8 for a description of the indications of the AMH LED and a listing of AMH related error messages.

See Section 4 for information on controlling PG7000 equipped with AMH by remote commands from a computer.

3.2.1 INSTALLING THE AMH MASS HANDLER ON THE PG7000 PLATFORM

To avoid possible damage to the AMH automated mass handler, always perform the initial start/verification procedure described in Section 2.7 BEFORE attempting to install AMH on the PG7000 Platform. Failing to do so, may result in attempting to install AMH with mass selection columns or pins in the incorrect position, which can damage the AMH mass handler.

원문: Fluke Calibration PG7000-AMH 메뉴얼(영문) · 제조사 원문 자료입니다. 사양은 제조사 사정에 따라 변경될 수 있습니다.

we measure, we calibrate, we validate.
KOLAS 국제공인교정기관 · ISO/IEC 17025

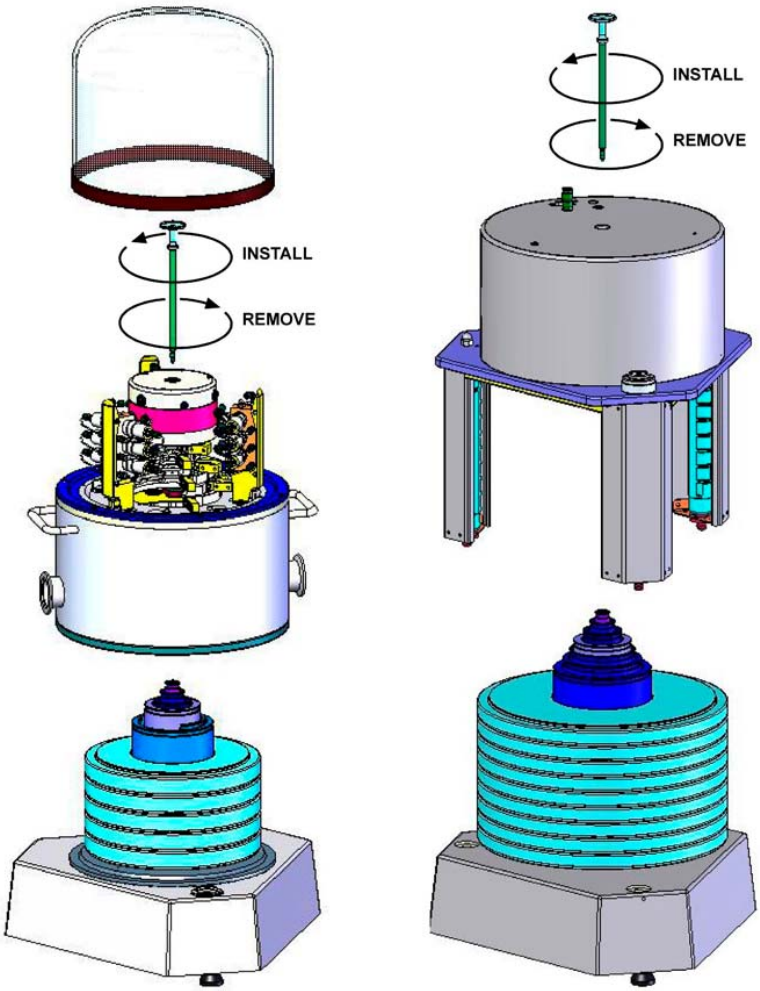

Figure 9. AMH Installation on PG7000 Platform

3.2.1.1 INSTALLING AMH-38

To install the AMH-38 mass handler on the PG7601 platform, proceed as follows (see Figure 9).

❶ **Prepare the AMH-38:** Perform the AMH start up/verification procedure describe in Section 2.7. This assures that the AMH mass selection columns and pins are all correctly positioned.

Make sure that the mass lifting shaft is NOT installed on the mass bell.

If the KF-40 port on the side of the AMH is being used for the vacuum reference connection, consider waiting to connect it after the AMH is on the PG7601 platform.

Check that the large O-ring at the bottom inside circumference of the AMH-38 vacuum chamber is well seated.

❷ **Lift the AMH-38 onto the PG7601 platform:** Using the handles on the side of the AMH-38 vacuum chamber, lift the AMH-38 above the PG7601 platform and masses. Center it over the mass load and gently lower it down until the bottom circumference of the AMH-38 vacuum chamber reaches the PG7601 vacuum

© 2009 DH Instruments, a Fluke Company

원문: Fluke Calibration PG7000-AMH 메뉴얼(영문) · 제조사 원문 자료입니다. 사양은 제조사 사정에 따라 변경될 수 있습니다.

TESSOL Technical Library
TS-TL-FLK-096

we measure, we calibrate, we validate.
㈜테솔 · www.tessol.com TS-TL-FLK-096 31 / 46
KOLAS 국제공인교정기관 · ISO/IEC 17025

plate. Check that the vacuum chamber is well aligned on the vacuum plate. The AMH may be rotated on the platform to the most convenient position.

❸ **Install the mass lifting shaft:** Slip the threaded end of the shaft down through hole in the center of the mass lifter. Thread the shaft into the binary mass carrier by holding and rotating the trim mass tray. NOTE THAT SHAFT HAS A LEFT HAND THREAD SO IT MUST BE ROTATED COUNTER-CLOCKWISE TO TIGHTEN IT. Use the 3 mm allen wrench supplied in the AMH-38 accessories to tighten the assembly until you feel the mass start to rotate.

> ⚠ *Be sure that the mass lifting shaft is fully threaded into the binary mass carrier. Thread it by hand, then tighten it using the allen wrench supplied with the AMH-38 until you feel the masses rotate. If the mass lifting shaft is not fully threaded, the mass will not align properly with the AMH mass handling columns and pins and damage may result.*

❹ **Install the bell jar:** Install the PG7601 Pyrex® bell jar over the upper portion of the AMH mass handler. Make the reference vacuum connection if the KF40 connection on the side of the AMH is being used.

❺ **If preparing to operate with vacuum in the AMH-38 bell jar, open the AMH vacuum supply valve to admit drive vacuum to the AMH-38 (see Section 2.3.2.5). If operating without vacuum in the AMH-38 bell jar, vent the AMH-38 vacuum supply port atmosphere.**

The PG7601 with AMH-38 is now ready to operate (see Section 3).

> ⚠ *Do not operate AMH-38 when using a PG7601 in "absolute by vacuum" mode without having a vacuum supply connected to AMH-38. Always check that AMH-38 is supplied with vacuum before establishing reference vacuum in the AMH-38 vacuum chamber. NEVER plug the AMH drive vacuum port. Failure to do so may result in damage to the binary mass pins and/or binary masses (see Section 2.3.2.5).*

3.2.1.2 INSTALLING AMH-100

To install the AMH-100 mass handler on the PG7000 Platform, proceed as follows (see Figure 9).

❶ **Prepare the AMH-100 and PG7000 Platform:** Perform the AMH start up/verification procedure describe in Section 2.7. This assures that the AMH mass selection columns and pins are all correctly positioned. Loosen the set screws that are across from the AMH mounting holes on the PG7000 vertical sides. Use a 2.5 mm allen wrench to loosen the set screws until they extend just beyond side of the PG7000 Platform. Make sure that the mass lifting shaft is NOT installed on the mass bell.

❷ **Lift the AMH-100 onto the PG7000 Platform:** Grasping the AMH-100 by the horizontal platform in its middle, lift the AMH-100 above the PG7601 platform and masses. Align it so that the bubble level on the AMH is at the front of the PG7000 Platform. Center it over the mass load and gently lower it down until the AMH feet enter the holes in the PG7000 Platform. **Assure that all three feet fully enter and seat in the platform holes.** Tighten the platform set screws using a 2.5 mm allen wrench provided in the AMH-100 accessories, one for each of the feet.

원문: Fluke Calibration PG7000-AMH 메뉴얼(영문) · 제조사 원문 자료입니다. 사양은 제조사 사정에 따라 변경될 수 있습니다.

❸ **Install the mass lifting shaft:** Slip the threaded end of the shaft down through hole in the center of the mass lifter. Thread the shaft into the binary mass carrier by holding and rotating the trim mass tray. NOTE THAT SHAFT HAS A LEFT HAND THREAD SO IT MUST BE ROTATED COUNTER-CLOCKWISE TO TIGHTEN IT. Use the 3 mm allen wrench supplied in the AMH-100 accessories to tighten the assembly until you feel the masses begin to rotate.

⚠ *Be sure that the mass lifting shaft is fully threaded into the binary mass carrier. Thread it by hand, then tighten it using the allen wrench supplied with the AMH-100 until you feel the masses rotate. If the mass lifting shaft is not fully threaded, the mass will not align properly with the AMH mass handling columns and pins and damage may result.*

The PG7000 with AMH-100 is now ready to operate (see Section 3).

3.2.2 REMOVING THE AMH MASS HANDLER FROM THE PG7000 PLATFORM

3.2.2.1 REMOVING AMH-38

To remove the AMH-38 mass handler from the PG7601 platform, proceed as follows (see Figure 9).

❶ **Load all the mass:** Use **[SPECIAL]**, **<8AMH>**, **<2control>**, **<3loadall>** to load all the masses of the AMH mass set. This assures that no masses are retained in the AMH so it will be able to be lifted off the platform freely.

❷ **Open the vacuum chamber and bell jar to atmospheric pressure:** Check that the vacuum chamber and bell jar are open to atmosphere. It is not possible to remove the AMH with internal pressure less than atmospheric pressure.

❸ **Remove the bell jar:** Remove the PG7601 Pyrex® bell jar and set aside. If the KF-40 connection on the side of the AMH vacuum chamber is being used for the vacuum reference, consider disconnecting it before lifting the AMH off the platform.

❹ **Remove the mass lifting shaft:** Use the 3 mm allen wrench supplied in the AMH-38 accessories to loosen and unscrew the shaft. NOTE THAT SHAFT HAS A LEFT HAND THREAD SO IT MUST BE ROTATED CLOCKWISE TO LOOSEN IT. Slip the shaft up and out of the mass handler.

❺ **Lift the AMH-38 off of the PG7601 platform:** Using the handles on the side of the AMH-38 vacuum chamber, lift the AMH-38 straight up until it clears the masses and set it on a flat surface. The AMH-38 mass handler weighs about 18 kg (40 lb.).

3.2.2.2 REMOVING AMH-100

To remove the AMH-100 mass handler from the PG7000 Platform, proceed as follows (see Figure 9).

❶ **Load all the mass:** Use **[SPECIAL]**, **<8AMH>**, **<2control>**, **<3loadall>** to load all the masses of the AMH mass set. This assures that no masses are retained in the AMH so it will be able to be lifted off the platform freely.

❷ **Loosen the mass handler column set screws:** Loosen the set screws that are across from the AMH mass selection columns on the PG7000 Platform

© 2009 DH Instruments, a Fluke Company

원문: Fluke Calibration PG7000-AMH 메뉴얼(영문) · 제조사 원문 자료입니다. 사양은 제조사 사정에 따라 변경될 수 있습니다.

TS-TL-FLK-096

we measure, we calibrate, we validate.
㈜테솔 · www.tessol.com TS-TL-FLK-096 33 / 46
KOLAS 국제공인교정기관 · ISO/IEC 17025

vertical sides. Use the 2.5 mm allen wrench supplied in the AMH accessories to loosen the set screws until they extend just beyond side of the PG7000 Platform.

❸ **Remove the mass lifting shaft:** Use the 3 mm allen wrench supplied in the AMH-38 accessories to loosen and unscrew the assembly. NOTE THAT SHAFT HAS A LEFT HAND THREAD SO IT MUST BE ROTATED CLOCKWISE TO LOOSEN IT. Slip the shaft up and out of the mass handler.

❹ **Lift the AMH-100 off of the PG7000 Platform:** Grasping the AMH-100 by the horizontal platform in its middle, lift the AMH-100 straight up until it clears the masses and set it on a flat surface. The AMH-100 mass handler weighs about 12 kg (25 lb.).

3.2.3 REGULAR MASS TO PRESSURE OR PRESSURE TO MASS OPERATION

See the PG7000 Operation and Maintenance Manual, General Operation, for details on PG7000 operation. If the PG7000 is equipped with AMH, AMH automatically loads the requested mass values transparently to the operator.

Generally, the PG7000 is used to set pressures by loading mass onto the piston and adjusting the pressure under the piston to float the piston. The PG7000 supports this operation locally from its main run screen in pressure entry or mass entry mode (see the PG7000 Operation and Maintenance Manual, [M or S]). In pressure entry mode, when AMH is installed and initialized, when the operator enters the pressure to set, the corresponding mass load is loaded automatically with the AMH's 0.1 kg mass loading resolution. If the PG7000 is set for finer than 0.1 kg resolution (see the PG7000 Operation and Maintenance Manual, [RES], the operator is prompted to load a trim mass value manually. In mass entry mode, if a mass value with resolution higher than 0.1 kg is entered, after AMH loads the value within 0.1 kg, the operator is prompted to load the remaining trim mass value manually.

Do not put your fingers or anything else beneath the AMH trim mass tray. AMH may lower up to 100 kg (220 lbs) onto anything that is under the trim mass tray. This could cause injury and/or damage.

3.2.4 DIRECT CONTROL OF AMH FUNCTIONS

In normal PG7000 operation, the AMH mass handler is operated transparently to the operator when a mass change is necessary.

For AMH to be operated it must first be initialized by selecting an AMH mass set (see PG7000 Operation and Maintenance Manual, Select Mass Set.

The status of the AMH (current masses loaded) can be viewed and its operation controlled directly using **[SPECIAL]**, **<8AMH>**.

Select **<1status>** to view which AMH masses are loaded.

Select **<2control>**, **<1up/down>** to raise and lower the mass load without changing the selected masses.

Select **<2control>**, **<2discreet>** to select specific masses to load and unload.

Select **<2control>**, **<3loadall>** to clear the AMH and load all the masses on the piston. This is the condition used to remove and install the AMH. In this state, the AMH retains no masses.

Select **<2control>**, **<1unloadall>** to clear the AMH and unload all the masses from the piston. In this state, the AMH retains all the masses.

원문: Fluke Calibration PG7000-AMH 메뉴얼(영문) · 제조사 원문 자료입니다. 사양은 제조사 사정에 따라 변경될 수 있습니다.

we measure, we calibrate, we validate.
㈜테솔 · www.tessol.com TS-TL-FLK-096 34 / 46
KOLAS 국제공인교정기관 · ISO/IEC 17025

TESSOL Technical Library
TS-TL-FLK-096

3.2.5 MAKING AND BREAKING THE REFERENCE VACUUM (AMH-38 ONLY)

When making and breaking the reference vacuum in the AMH 38 vacuum chamber to switch the PG7000 between absolute and gauge mode operation, it is important that the AMH mass manipulation actuators also be exposed to the correct pressure. The correct pressure is vacuum in absolute mode and atmosphere in gauge mode.

If AMH-38 is to be operated with a vacuum in its vacuum chamber, a vacuum supply must be connected to the drive vacuum connection quick connector so that the AMH actuators (mass lifter, mass selector pins) are evacuated when they are not pressurized. See Section 2.3.2.2 for information on correctly connecting the drive vacuum supply to AMH-38.

When using AMH-38 in absolute mode, the drive vacuum supply sleeve valve must be set to the VACUUM position just before establishing the reference vacuum.

When operating with atmosphere in the vacuum chamber, set the drive vacuum supply sleeve valve to GAUGE so that the AMH actuators vent to atmosphere.

Failure to supply vacuum to the AMH-38 before establishing a vacuum in its vacuum chamber may cause unexpected operation of the binary mass selector pins which could result in damage to the AMH mass handler and or masses (see Section 2.3.2.5). NEVER plug the AMH drive vacuum port.

3.2.6 ACCESSING THE PG7000 PISTON-CYLINDER MODULE

To access the piston-cylinder module in a PG7000 Platform with AMH installed, the AMH mass handler and mass set must be removed.

First, remove the AMH mass handler as described in Section 3.2.2.

Then, remove the AMH mass set following the instructions in Section 2.6 in reverse order.

Once the AMH mass handler and mass set are removed, the piston-cylinder module can be accessed and removed by simply unscrewing it from the mounting post following the standard procedure (see the PG7000 Operation and Maintenance Manual).

3.2.7 INDICATOR LED

There is a green indicator LED located on AMH-38 and AMH-100 near the power supply connection. It is on the rear electrical, vacuum chamber pass through of AMH-38 and on the top cover of AMH-100 (see Figures 1, 2).

The indicator has four possible conditions:

- **Off:** AMH is not powered.
- **Solid green:** AMH is powered and operation is normal.
- **Slow flashing green:** AMH is powered and is in an unknown state. To recover use **[SPECIAL]**, **<8AMH>**, **<2control>**, **<3loadall>** or **<4unloadall>** or initialize AMH by selecting an AMH mass set (see Section 2.7., Step ❸).
- **Fast flashing green:** AMH is powered and has encountered a known error condition. The error is displayed on the PG Terminal (see Section 3.2.8) and available remotely using the "AMHERR" command. To recover use **[SPECIAL]**, **<8AMH>**, **<2control>**, **<3loadall>** or **<4unloadall>** or initialize AMH by selecting an AMH mass set (see Section 2.7, Step ❸).

© 2009 DH Instruments, a Fluke Company

원문: Fluke Calibration PG7000-AMH 메뉴얼(영문) · 제조사 원문 자료입니다. 사양은 제조사 사정에 따라 변경될 수 있습니다.

we measure, we calibrate, we validate.
㈜테솔 · www.tessol.com TS-TL-FLK-096 35 / 46
KOLAS 국제공인교정기관 · ISO/IEC 17025

TS-TL-FLK-096

3.2.8 ERROR MESSAGES

The AMH mass handler can inform the PG7000 of certain error conditions.

An AMH error condition is indicated on the PG Terminal by an error message and listing of the error number on the bottom right hand of the display.

An AMH error is indicated remotely by the PG7000 return string including the character “E” in the third “Ready indicator position”. The “Ready” indication is included in the “PR” and “STATUS” commands. When an “E” has been returned, the error identification can then be retrieved using the “AMHERR” command. See the PG7000 Operation and Maintenance Manual, Remote Operation for additional information.

The possible errors are listed in table 4.

Table 4. AMH Errors

AMH ERROR NUMBER	PG TERMINAL MESSAGE	COMMENT
None (Remote error #29)	**<AMH response fault>**	The AMH has returned a string that the PG7000 cannot identify. This is a PG7000 generated error.
None (Remote error #28)	**<AMH not responding>**	The PG7000 has not received a response from the AMH. This is a PG7000 generated error as a consequence of a time out while attempting to communicate with AMH.
2	None	Text argument is too long.
6	None	Argument out of range.
7	None	Missing or improper argument.
9	None	Unknown Command.
10	None	Invalid command suffix.
13	None	Receive buffer overflow. Buffer has been flushed.
18	None	Command not available.
60	None	Watchdog reset has occurred.
100	None	Present mass setting unknown.
102	None	6.2 kg binary mass not available on AMH-38.
103	**<AMH memory failure>**	Mass memory.
104	**<AMH memory failure>**	Non-volatile memory is corrupt.
105	**<AMH logic failure>**	Fatal electronics error.
106	None	Mass load must first be lifted.
107	**<AMH logic failure>**	Incorrect CPLD version.
108	**<AMH logic failure>**	CPLD logic error.
110	**<AMH unable to rotate column motor>**	Column motor switch error on column 0 (C0).
111	**<AMH unable to rotate column motor>**	Column motor switch error on column 1 (C1).
112	**<AMH unable to rotate column motor>**	Column motor switch error on column 2 (C2).
113	**<AMH unable to rotate column motor>**	Wrong column switch detected.
114	**<AMH logic failure>**	JTAG buffer overflow.
115	**<AMH logic failure>**	JTAG max retries.
116	**<AMH logic failure>**	JTAG TDO mismatch.
117	**<AMH logic failure>**	JTAG illegal state.
118	**<AMH logic failure>**	JTAG ENDxR state unknown.
119	**<AMH logic failure>**	JTAG unknown error.

원문: Fluke Calibration PG7000-AMH 메뉴얼(영문) · 제조사 원문 자료입니다. 사양은 제조사 사정에 따라 변경될 수 있습니다.

Table 4. AMH Errors (continued)

AMH ERROR NUMBER	PG TERMINAL MESSAGE	COMMENT
120	**<AMH unable to lift mass load>**	Mass lift valve not sensed.
121	**<AMH unable to lower mass load>**	Mass is dropping unexpectedly.
122	**<AMH unable to lift mass load>**	Mass never lifted.
123	**<AMH unable to lower mass load>**	Mass is not dropping when it should.
124	**<AMH unable to lift mass load>**	IR beam malfunction. AMH will not attempt lift
125	**<AMH unable to rotate column motor>**	Column motor switch on column 1 is misaligned.
126	**<AMH unable to rotate column motor>**	Column motor switch on column 2 is misaligned.
130	**<AMH valve failure>**	6.2 kg binary mass pin engage valve (VLV#14) not sensed.
131	**<AMH valve failure>**	3.2 kg binary mass pin engage valve (VLV#6) not sensed.
132	**<AMH valve failure>**	1.6 kg binary mass pin engage valve (VLV#12) not sensed.
133	**<AMH valve failure>**	0.8 kg binary mass pin engage valve (VLV#4) not sensed.
134	**<AMH valve failure>**	0.4 kg binary mass pin engage valve (VLV#10) not sensed.
135	**<AMH valve failure>**	0.2 kg binary mass pin engage valve (VLV#2) not sensed.
136	**<AMH valve failure>**	0.1 kg binary mass pin engage valve (VLV#8) not sensed.
137	**<AMH valve failure>**	6.4 kg binary mass pin disengage valve (VLV#15) not sensed.
138	**<AMH valve failure>**	3.2 kg binary mass pin disengage valve (VLV#7) not sensed.
139	**<AMH valve failure>**	1.6 kg binary mass pin disengage valve (VLV#13) not sensed.
140	**<AMH valve failure>**	0.8 kg binary mass pin disengage valve (VLV#5) not sensed.
141	**<AMH valve failure>**	0.4 kg binary mass pin disengage valve (VLV#11) not sensed.
142	**<AMH valve failure>**	0.2 kg binary mass pin disengage valve (VLV#3) not sensed.
143	**<AMH valve failure>**	0.1 kg binary mass pin disengage valve (VLV#9) not sensed.

 © 2009 DH Instruments, a Fluke Company

원문: Fluke Calibration PG7000-AMH 메뉴얼(영문) · 제조사 원문 자료입니다. 사양은 제조사 사정에 따라 변경될 수 있습니다.

NOTES

원문: Fluke Calibration PG7000-AMH 메뉴얼(영문) · 제조사 원문 자료입니다. 사양은 제조사 사정에 따라 변경될 수 있습니다.

4. REMOTE OPERATION

4.1 OVERVIEW

The AMH mass handling system is equipped with an RS232 interface (COM1). The interface is used for communications between the AMH mass handler and the PG7000 Platform's AMH port. The AMH mass handler is not intended to be addressed directly with remote commands from a computer. Its functionality is achieved by commands addressed to the PG7000 Platform. For example, sending a "PS=" command to the PG7000 Platform when an AMH is already initialized, causes the AMH to load mass automatically. Certain AMH specific commands can be sent to the PG7000 Platform, for example a command to clear the AMH and load all the mass on the piston. These commands are listed in the PG7000 Operation and Maintenance Manual, Remote Operation along with the other PG7000 remote commands.

© 2009 DH Instruments, a Fluke Company

원문: Fluke Calibration PG7000-AMH 메뉴얼(영문) · 제조사 원문 자료입니다. 사양은 제조사 사정에 따라 변경될 수 있습니다.

TESSOL Technical Library

TS-TL-FLK-096

we measure, we calibrate, we validate.
KOLAS 국제공인교정기관 · ISO/IEC 17025
㈜테솔 · www.tessol.com TS-TL-FLK-096 39 / 46

NOTES

원문: Fluke Calibration PG7000-AMH 메뉴얼(영문) · 제조사 원문 자료입니다. 사양은 제조사 사정에 따라 변경될 수 있습니다.

5. Maintenance and Adjustments

5.1 MAINTENANCE

The AMH mass handler is designed for long term, maintenance free operation.

Certain day-to-day procedures are required for proper operation.

- **Lubricate the threads of the mass lifting shaft:** Occasionally, and especially after cleaning, lubricate the threads on the bottom of the mass lifting shaft. Wipe on a very thin film of Krytox® grease (supplied with the PG7000 Platform accessories). Wipe off all excess grease.

- **Lubricate the inside of the mass bell:** Occasionally perform the bell positioning test described in Section 2.5.1. If the test fails, or if any sign of the bell not disengaging and engaging from the piston when the mass load is lifted is observed in operation, apply and wipe off a very thin film of Krytox® grease (supplied with the PG7000 Platform accessories) to the inside surface of the top of the mass loading bell where it contacts the outside perimeter of the piston cap.

If AMH returns no errors and no operational issues are observed, no regular maintenance is required. To avoid any planned downtime, an AMH overhaul is recommended every 10000 hours of operation or three years. Contact a DHI Authorized Service Provider to have this service performed.

© 2009 DH Instruments, a Fluke Company

원문: Fluke Calibration PG7000-AMH 메뉴얼(영문) · 제조사 원문 자료입니다. 사양은 제조사 사정에 따라 변경될 수 있습니다.

we measure, we calibrate, we validate.
㈜테솔 · www.tessol.com TS-TL-FLK-096 41 / 46
KOLAS 국제공인교정기관 · ISO/IEC 17025

TESSOL Technical Library
TS-TL-FLK-096

NOTES

원문: Fluke Calibration PG7000-AMH 메뉴얼(영문) · 제조사 원문 자료입니다. 사양은 제조사 사정에 따라 변경될 수 있습니다.

6. TROUBLESHOOTING

Identify the symptom or unexpected behavior you are observing from the **SYMPTOM** list below. A **PROBABLE CAUSE** is provided and a **SOLUTION** is proposed including references to manual sections that provide information that may be of assistance.

This troubleshooting guide is for the AMH mass handler. For general PG7000 troubleshooting, see the PG7000 Operation and Maintenance Manual.

Table 5. AMH Troubleshooting Checklist

SYMPTOM	PROBABLE CAUSE	SOLUTION
PG Terminal displays **<AMH not responding>**.	PG7000 is unable to establish communications with the AMH mass handler due to incorrect cable connection or COM port settings.	Check that the correct cables are being used to make the interface connections between the PG7000 and the AMH and that the cables are connected to the correct ports. 2.3.2.4
PG Terminal displays **<AMH unable to lift mass load ERR#122>**.	AMH mass lifter is unable to lift mass load fully up to the mass selection position. Drive air pressure is too low or flow to AMH is excessively restricted.	Increase drive air pressure and improve drive air flow conditions. 2.2.2.1, 2.3.2.1
Mass handling system will not go down over the masses to be installed on the platform.	Main mass columns are not in correct position because AMH has not been properly prepared for installation.	Perform the AMH start up/verification procedure prior to attempting to install it on the PG7000 Platform. 2.7
AMH masses rock back and forth when lifted to the mass selection position.	AHM is not correctly seated on the PG7000 Platform and is misaligned relative to the mass load.	With AMH-100, check that there is no foreign matter in the column holes in the platform and the AMH column feet are fully engaged with feet set screws tightened. 3.2.1.2 With AMH-38, check that the large O-ring on the bottom inner circumference of the bell is well seated and that the AMH is properly centered on the PG7601 vacuum plate. 3.2.1.1
Main masses move when mass is in mass selection position and main mass selection columns are rotating.		
PG Terminal displays **<AMH unable to rotate column motor>** and **ERR#110**, **ERR#111** or **ERR#112**.	The mass lifting shaft is not fully threaded into the binary mass carrier or the trim mass tray has become loose from the mass lifting shaft.	Tighten the parts. Note that the mass lifting shaft has a left hand thread. 3.2.1
Poor behavior of PG7000 with symptoms such as inconsistent indication of piston position, unstable pressure when piston is floating.	Mechanical interface between mass bell and piston cap is not operating well causing bell not to seat properly on piston when AMH lowers mass.	Check condition of piston cap and correct if necessary, lubricate inside of bell. 2.5.1
Mass handling error occurs with AMH-38 in absolute mode due to binary mass selection pins being extended when they should be retracted.	Operating with a vacuum reference in the vacuum chamber without applying drive vacuum to the AMH. Operating with drive vacuum port plugged.	Apply drive vacuum to the AMH when operating with vacuum in the vacuum chamber. NEVER plug the drive vacuum port. 2.3.2.2
Cannot remove bell jar from AMH-38 though there is no vacuum in the bell jar.	When vacuum drive is applied to the AMH without vacuum in the vacuum chamber, vacuum may leak through the tubular mass pin actuators and accumulate in the vacuum chamber.	Remove vacuum drive from the AMH when there is no vacuum in the vacuum chamber. 3.2.5
When setting pressures, PG Terminal stops to instruct to load masses rather than completing all mass loading automatically.	PG7000 pressure setting resolution is set finer than 0.1 kg.	Set PG7000 resolution to 0.1 kg. PG7000 Operation and Maintenance Manual, [RES].
PG Terminal displays a message and **<ERR #nnn>** on the bottom right hand corner.	An AMH error has occurred.	Determine AMH error in Table 4. Reset AMH by selecting AMH mass set or using **[SPECIAL]**, **<8AMH>**, **<2control>**, **<1loadall>**.

© 2009 DH Instruments, a Fluke Company

원문: Fluke Calibration PG7000-AMH 메뉴얼(영문) · 제조사 원문 자료입니다. 사양은 제조사 사정에 따라 변경될 수 있습니다.

TS-TL-FLK-096

we measure, we calibrate, we validate.
KOLAS 국제공인교정기관 · ISO/IEC 17025
㈜테솔 · www.tessol.com TS-TL-FLK-096 43 / 46

NOTES

원문: Fluke Calibration PG7000-AMH 메뉴얼(영문) · 제조사 원문 자료입니다. 사양은 제조사 사정에 따라 변경될 수 있습니다.

7. WARRANTY STATEMENT

7.1 WARRANTY STATEMENT

Except to the extent limited or otherwise provided herein, **DH Instruments, a Fluke Company** (**DHI**) warrants for one year from purchase, each new product sold by it or one of its authorized distributors, only against defects in workmanship and/or materials under normal service and use. Products which have been changed or altered in any manner from their original design, or which are improperly or defectively installed, serviced or used are not covered by this warranty.

DHI and any of its Authorized Service Providers' obligations with respect to this warranty are limited to the repair or replacement of defective products after their inspection and verification of such defects. All products to be considered for repair or replacement are to be returned to **DHI**, or it's Authorized Service Provider, freight prepaid, after receiving authorization from **DHI** or it's Authorized Service Provider.
The buyer assumes all liability vis-à-vis third parties with respect to its acts or omissions involving use of the products. In no event shall **DHI** be liable to purchaser for any unforeseeable or indirect damage, it being expressly stated that, for the purpose of this warranty, such indirect damage includes, but is not limited to, loss of production, profits, revenue, or goodwill, even if **DHI** has been advised of the possibility thereof, and regardless of whether such products are used individually or as components in other products.

Items returned to **DHI** under warranty claim but determined to not have a defect covered under warranty or to not have a defect at all are subject to an evaluation and shipping charge as well as applicable repair and/or calibration costs.

The provisions of this warranty and limitation may not be modified in any respect except in writing signed by a duly authorized officer of **DHI.**

The above warranty and the obligations and liability of **DHI** and its Authorized Service Providers exclude any other warranties or liabilities of any kind.

Table 6. DHI Authorized Service Providers

DH INSTRUMENTS, A FLUKE COMPANY AUTHORIZED SERVICE PROVIDERS			
COMPANY	**ADDRESS**	**TELEPHONE, FAX & EMAIL**	**NORMAL SUPPORT REGION**
DH Instruments, a Fluke Company	4765 East Beautiful Lane Phoenix AZ 85044-5318 USA	Tel 602.431.9100 Fax 602.431.9559 cal.repair@dhinstruments.com	Worldwide
Minerva Meettechniek B.V	Chrysantstraat 1 3812 WX Amersfoort the NETHERLANDS	Tel (+31) 33.46.22.000 Fax (+31) 33.46.22.218 info@minervaipm.com	European Union
Ohte Giken	2-9-1 Sengen, Tsukuba-Shi Ibaraki Prefecture 305 JAPAN	Tel 0298-55-8778 Fax 0298-55-8700 tohte@ohtegiken.co.jp	Japan/Asia
DHI Products Technical Service Division	National Institute of Metrology Heat Division Pressure & Vacuum Lab NO. 18, Bei San Huan Donglu Beijing 100013 PR CHINA	Tel 010-64291994 ext 5 Tel 010-64218637 ext 5 Fax 010-64218703 cxcen@mx.cei.gov.cn	Peoples Republic of China

© 2009 DH Instruments, a Fluke Company

원문: Fluke Calibration PG7000-AMH 메뉴얼(영문) · 제조사 원문 자료입니다. 사양은 제조사 사정에 따라 변경될 수 있습니다.

we measure, we calibrate, we validate.
㈜테솔 · www.tessol.com TS-TL-FLK-096 45 / 46
KOLAS 국제공인교정기관 · ISO/IEC 17025

TESSOL Technical Library
TS-TL-FLK-096

NOTES

원문: Fluke Calibration PG7000-AMH 메뉴얼(영문) · 제조사 원문 자료입니다. 사양은 제조사 사정에 따라 변경될 수 있습니다.