FLUKE®

729 Pro
Automatic Pressure Calibrator

Users Manual

October 2020
© 2020 Fluke Corporation. All rights reserved.
Specifications are subject to change without notice.
All product names are trademarks of their respective companies.

원문: Fluke FLUKE-729PRO 메뉴얼 · 제조사 원문 자료입니다. 사양은 제조사 사정에 따라 변경될 수 있습니다.

LIMITED WARRANTY AND LIMITATION OF LIABILITY

Each Fluke product is warranted to be free from defects in material and workmanship under normal use and service. The warranty period is three years and begins on the date of shipment. Parts, product repairs, and services are warranted for 90 days. This warranty extends only to the original buyer or end-user customer of a Fluke authorized reseller, and does not apply to fuses, disposable batteries, or to any product which, in Fluke's opinion, has been misused, altered, neglected, contaminated, or damaged by accident or abnormal conditions of operation or handling. Fluke warrants that software will operate substantially in accordance with its functional specifications for 90 days and that it has been properly recorded on non-defective media. Fluke does not warrant that software will be error free or operate without interruption.

Fluke authorized resellers shall extend this warranty on new and unused products to end-user customers only but have no authority to extend a greater or different warranty on behalf of Fluke. Warranty support is available only if product is purchased through a Fluke authorized sales outlet or Buyer has paid the applicable international price. Fluke reserves the right to invoice Buyer for importation costs of repair/replacement parts when product purchased in one country is submitted for repair in another country.

Fluke's warranty obligation is limited, at Fluke's option, to refund of the purchase price, free of charge repair, or replacement of a defective product which is returned to a Fluke authorized service center within the warranty period.

To obtain warranty service, contact your nearest Fluke authorized service center to obtain return authorization information, then send the product to that service center, with a description of the difficulty, postage and insurance prepaid (FOB Destination). Fluke assumes no risk for damage in transit. Following warranty repair, the product will be returned to Buyer, transportation prepaid (FOB Destination). If Fluke determines that failure was caused by neglect, misuse, contamination, alteration, accident, or abnormal condition of operation or handling, including overvoltage failures caused by use outside the product’s specified rating, or normal wear and tear of mechanical components, Fluke will provide an estimate of repair costs and obtain authorization before commencing the work. Following repair, the product will be returned to the Buyer transportation prepaid and the Buyer will be billed for the repair and return transportation charges (FOB Shipping Point).

THIS WARRANTY IS BUYER'S SOLE AND EXCLUSIVE REMEDY AND IS IN LIEU OF ALL OTHER WARRANTIES, EXPRESS OR IMPLIED, INCLUDING BUT NOT LIMITED TO ANY IMPLIED WARRANTY OF MERCHANTABILITY OR FITNESS FOR A PARTICULAR PURPOSE. FLUKE SHALL NOT BE LIABLE FOR ANY SPECIAL, INDIRECT, INCIDENTAL OR CONSEQUENTIAL DAMAGES OR LOSSES, INCLUDING LOSS OF DATA, ARISING FROM ANY CAUSE OR THEORY.

Since some countries or states do not allow limitation of the term of an implied warranty, or exclusion or limitation of incidental or consequential damages, the limitations and exclusions of this warranty may not apply to every buyer. If any provision of this Warranty is held invalid or unenforceable by a court or other decision-maker of competent jurisdiction, such holding will not affect the validity or enforceability of any other provision.

Fluke Corporation
P.O. Box 9090
Everett, WA 98206-9090
U.S.A.

Fluke Europe B.V.
P.O. Box 1186
5602 BD Eindhoven
The Netherlands

11/99

원문: Fluke FLUKE-729PRO 메뉴얼 · 제조사 원문 자료입니다. 사양은 제조사 사정에 따라 변경될 수 있습니다.

Table of Contents

Title	Page

Introduction 1
Contact Fluke 2
Safety 2
Standard Equipment 2
Buttons 4
Display 6
- Triple-Function Display 9
- RTD Connection 9
- Pressure Module Connection 10

Ports 11
Setup Menu 12
- 729 Pro Information 13
- 729 Pro Setup 14
- Manage Users 15
- Manage Test Results 15
- Manage Screen Shots 16
- Manage Custom Tasks 16
- Maintenance Menu 16
  - Drain Water (Condensation) 16
  - Keypad Test 17
  - Exhaust 17

Tasks Menu 18
- Pressure Transmitter (P/I) 18
- Pressure Switch (SW) 19
- Current to Pressure Test (I/P) 21
- Pressure Leak Test 22
- Pressure Transmitter (P/V) 23
- Pressure Transmitter (P/P) 24

HART Functionality 25
- Loop Power +24V ON 26
- Enable HART 250W 26

원문: Fluke FLUKE-729PRO 메뉴얼 · 제조사 원문 자료입니다. 사양은 제조사 사정에 따라 변경될 수 있습니다.

HART Menu 27
HART Data 27
HART Service 27
PV Zero Trim 28
mA Output Trim 28
Trim to Applied Values 28
Set Fixed mA Output 28
Re-range Transmitter 28
Device Diagnostics 29
Calibrate (Ad hoc) 29
Adjust 30
PV Zero Trim 30
mA Output Trim 30
Trim to Applied Values 30
As Left 31
Find Task by Tag 31
Bus Polling 31
Measure Mode 31
Current Measurement 31
Volts Measurement 32
Pressure Measurement 32
Autostep and Auto Ramp the Output Value 34
Autostep 34
Auto Ramp the Output 35
Temperature Measurement 36
Source mA Mode 36
4 to 20 mA Simulation 37
Log 38
Communication with a PC 39
Battery 39
Charge the Battery 39
Battery Life 40
Maintenance 40
In Case of Difficulty 40
Battery Replacement 41
PMM Replacement 42
Update Product Firmware 42
Calibration Data 43
Service Center Calibration or Repair 43
Error Messages 43
HART Commands 47
Documenting Functionality 47
Strap 48

원문: Fluke FLUKE-729PRO 메뉴얼 · 제조사 원문 자료입니다. 사양은 제조사 사정에 따라 변경될 수 있습니다.

User-Replaceable Parts and Accessories 48
Specifications 49
Pressure Specification 49
Electrical Specification 49
Pressure Measurement Module Specification 50
Mechanical Specification 50
Environmental Specification 50
Safety 50
Electromagnetic Compatibility (EMC) 51

원문: Fluke FLUKE-729PRO 메뉴얼 · 제조사 원문 자료입니다. 사양은 제조사 사정에 따라 변경될 수 있습니다.

729 PRO
Users Manual

원문: Fluke FLUKE-729PRO 메뉴얼 · 제조사 원문 자료입니다. 사양은 제조사 사정에 따라 변경될 수 있습니다.

Introduction

The Fluke 729 Pro Automatic Pressure Calibrators (the Product) are portable field pressure calibration tools for lab or field use. This battery-operated product performs automatic pressure calibration of transmitters, pressure switches, and gauges. The automatic functions are done by the Product or by downloaded tasks from calibration-management software (CMS). The Product also supplies basic HART® communicator functions when used with HART-capable transmitters.

Product key features and benefits include:

- Automatic pressure calibration of transmitters, pressure switches, and pressure gauges.
- Source and measure pressure to test and calibrate pressure sensors, transmitters, and other pressure instruments.
- Source and simulate milliamp signals while measuring pressure for testing current to pressure converters (I/P).
- HART (Highway Addressable Remote Transducer) communication to configure and perform trim on HART smart-pressure transmitters.
- Provides Loop Power and simultaneously measures mA output from a connected device.
- Measures pressure with all Fluke-750P Series pressure modules.
- Document automated as-found/as-left procedures to satisfy quality regulations or audits with DPCTrack2 software.
- Advanced features like auto step and auto ramp allow tests of devices automatically.
- The pressure switch test automatically ramps pressure up and down across expected switch trip setting to calibrate pressure switches.
- Interchangeable Pressure Measurement Modules

원문: Fluke FLUKE-729PRO 메뉴얼 · 제조사 원문 자료입니다. 사양은 제조사 사정에 따라 변경될 수 있습니다.

Contact Fluke

Fluke Corporation operates worldwide. For local contact information, go to our website: www.fluke.com.

To register your product, view, print, or download the latest manual or manual supplement, go to our website.

Fluke Corporation
P.O. Box 9090
Everett, WA 98206-9090

+1-425-446-5500

fluke-info@fluke.com

Safety

General Safety Information is in the printed Safety Information document that ships with the Product and at www.fluke.com. More specific safety information is listed where applicable.

A **Warning** identifies conditions and procedures that are dangerous to the user. A **Caution** identifies conditions and procedures that can cause damage to the Product or the equipment under test.

Standard Equipment

Table 1 is a list of the standard equipment.

원문: Fluke FLUKE-729PRO 메뉴얼 · 제조사 원문 자료입니다. 사양은 제조사 사정에 따라 변경될 수 있습니다.

Automatic Pressure Calibrator
Standard Equipment

Table 1. Standard Equipment

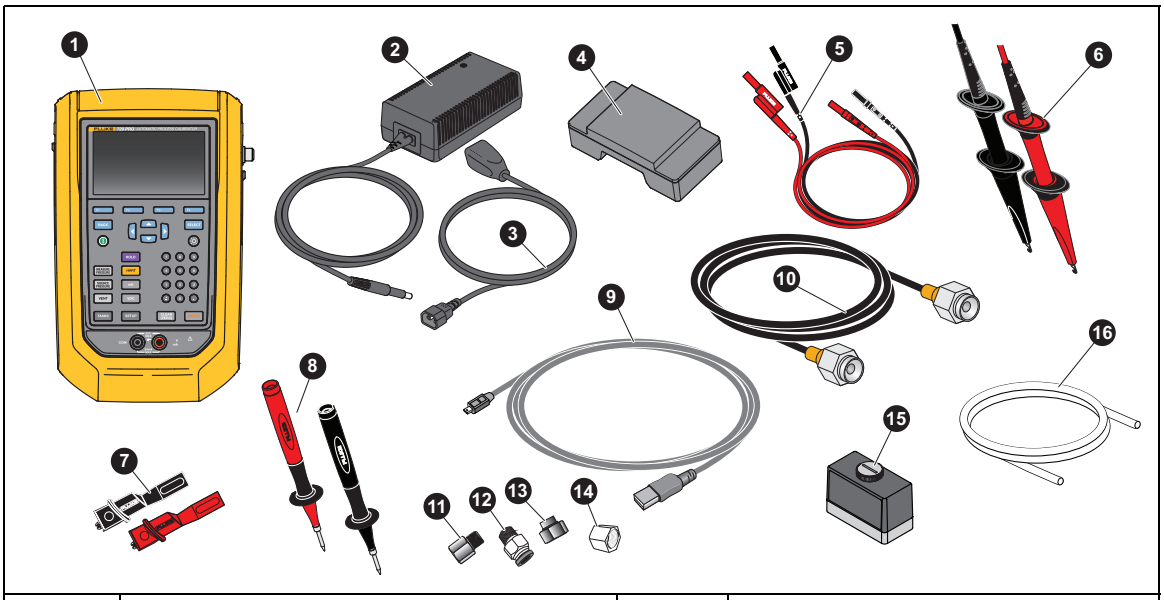

Item	Description	Item	Description
1	729 Pro Automatic Pressure Calibrator	11	Fitting, 1/8 in NPT-Female x 1/4 in NPT-Female
2	AC/DC converter	12	Fitting, 1/8 in NPT-Male x G1/4-Male
3	Mains line cable	13	Fitting, 1/8 in NPT-Female x M20-Female
4	Rechargeable Li-ion Battery	14	Fitting, 1/4 in BSP-Female x 1/8 in NPT-Female
5	Stackable test lead set	15	Pressure measurement module (PMM)
6	AC280 Sure Grip hook set (red and black)	16	Hose to drain condensed water generated from the Product. 1/8 in diameter, 1 ft length
7	Alligator clips (red and black)	Not shown	Adjustable quick-release strap for hanging the Product
8	One set of TP220 test probes (red and black)		Safety Information
9	USB communication cable: 3 ft (1 m) Type A plug for host (PC) to Mini-B plug for device		Traceable calibration report with data
10	Flex tube, 2 mm diameter, 5 ft (1.5 m) length		PTFE Tape

원문: Fluke FLUKE-729PRO 메뉴얼 · 제조사 원문 자료입니다. 사양은 제조사 사정에 따라 변경될 수 있습니다.

729 Pro
Users Manual

Buttons

Table 2 is a list of the Product buttons and the softkeys.

Table 2. Buttons

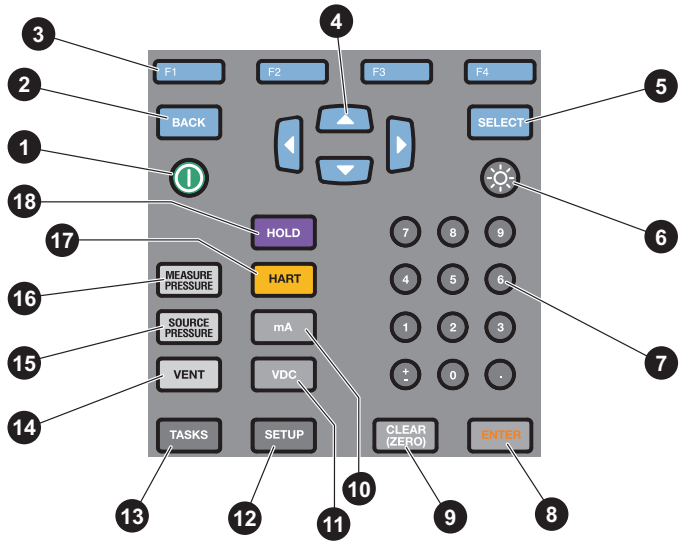

Item	Description
1	Push ⏻ to turn on or turn off the Product.
2	Push BACK to move to the previous user interface (UI) screen. When navigating through the screens, BACK can move out of most screens and with repeated pushes, can take you all the way to the startup screen.
3	F1 F2 F3 F4: Performs the specified function of the label above each softkey on the display. These labels change throughout the UI.
4	◀▶▲▼: Push to move the display cursor left, right, up, or down. Cursor highlights in yellow over the selection.
5	Push SELECT to make a selection on the UI. This button cannot confirm number or character choices (push ENTER).
6	Push ☼ to change the display brightness from dim to bright and back again.
7	Numeric keypad. Used when a numeric entry is necessary.
8	Push ENTER to make a selection on the UI. Only ENTER confirms numbers and characters. Confirm all editable items with ENTER.
9	Push CLEAR (ZERO) to clear highlighted entry. When PI/PV/IP/SWT starts, push to zero the pressure reading.
10	Push mA to select the mA measure function.
11	Push VDC to select the measure dc voltage function.

원문: Fluke FLUKE-729PRO 메뉴얼 · 제조사 원문 자료입니다. 사양은 제조사 사정에 따라 변경될 수 있습니다.

Table 2. Buttons (cont.)

Item	Description
⓬	Push SETUP to enter the Setup menu to change operating parameters. See *Setup Menu*.
⓭	Push TASKS to enter the Tasks menu. See *Tasks Menu*.
⓮	Push VENT to release pressure at the internal pressure port. VENTING shows on the display as the Product vents. VENTED shows after venting is complete.
⓯	SOURCE PRESSURE: Use this function to output (source) a target pressure from the Product. Use the arrows to select the Setpoint field and enter the values with the number buttons.
⓰	MEASURE PRESSURE: Use this function for pressure measurement mode.
⓱	Push HART to enter HART communication mode.
⓲	Push HOLD to freeze the reading on the display. Push HOLD a second time to release the hold on the display. Push and hold to capture the screen and save into memory.

원문: Fluke FLUKE-729PRO 메뉴얼 · 제조사 원문 자료입니다. 사양은 제조사 사정에 따라 변경될 수 있습니다.

729 Pro
Users Manual

Display

Table 3 shows the details of the display.

Table 3. Display

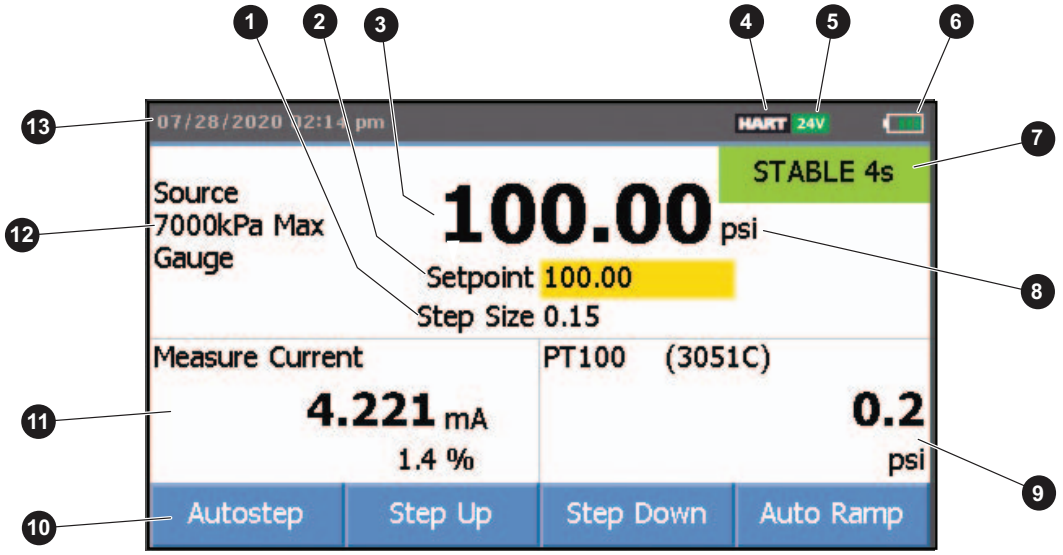

Item	Description	Item	Description
1	Step size indicator	8	Pressure units indicator
2	Setpoint indicator	9	External display shows selected device that is connected. The device can be a pressure module, temperature probe, process variable (PV) of connected HART device, or Fluke Connect secondary device reading.
3	Main display with measured or sourced value	10	Softkey indicator
4	HART on indicator	11	Current, voltage, or pressure switch display
5	24 volt loop power active indicator	12	Pressure Measurement Module indicator
6	Battery charge level	13	Time and date display
7	Pressure port status		

원문: Fluke FLUKE-729PRO 메뉴얼 · 제조사 원문 자료입니다. 사양은 제조사 사정에 따라 변경될 수 있습니다.

The display can also show different configurations:

Typically, the display does shows two functions, see Figure 1.
See *Triple-Function Display* for more information.

- The upper display for the internal pressure has these functions:
  - VENT
  - SOURCE
  - MEASURE
- The lower display shows these functions:
  - Measure Current
  - Source Current
  - Simulate Current
  - Measure VDC
  - Switch

Figure 1. Typical Dual-Function Display

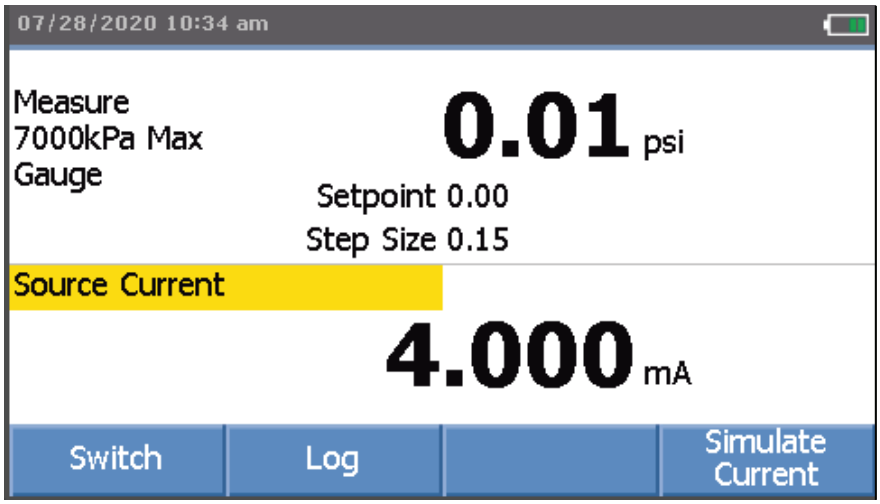

원문: Fluke FLUKE-729PRO 메뉴얼 · 제조사 원문 자료입니다. 사양은 제조사 사정에 따라 변경될 수 있습니다.

The screen has two sections:

The **upper display** shows the internal pressure controller status and includes:

- **Mode:** Measure, Source, and Vent
- **Pressure Value:** Current measured pressure and unit
- **Status:** Shows nothing in measure mode, NOT READY, STABLE in source mode, and VENTING, VENTED in vent mode.
- **Setpoint:** Current setpoint for source function.
- **Step Size:** The step size when F2 (**Step Up**) and F3 (**Step Down**) are pushed when sourcing pressure.

The **lower display** shows the electrical status and includes:

- **Mode:** Measure Current, Source Current, Simulate Current, Measure V dc, and Switch.
- **Reading:** Current reading from measure functions or setpoint for source functions.
- **Switch State:** Shows the pressure reading when the switch contacts open and close.
- **Percent:** Shows the percentage value of 4 mA to 20 mA or 1 V to 5 V in measure functions.
- **Status:** Shows Open circuit detected in mA source mode.

원문: Fluke FLUKE-729PRO 메뉴얼 · 제조사 원문 자료입니다. 사양은 제조사 사정에 따라 변경될 수 있습니다.

Triple-Function Display

When the third function (RTD, External Pressure Module, HART Transmitter, or FC secondary device) is connected, the Product changes to triple-function display automatically. In the subsequent triple-function display, the original bottom half of the display is divided into two parts:

- The **left** display continues to show the electrical measurement display.
- The **right** display shows the model name, reading, and units from the selected third function. See Figure 2. The figure shows a transmitter device (3051C).

When more than one third function is available, use the arrow keys to highlight the device (in yellow) in the right display. Then use the softkeys to select the device to show.

Figure 2. Triple-Function Display

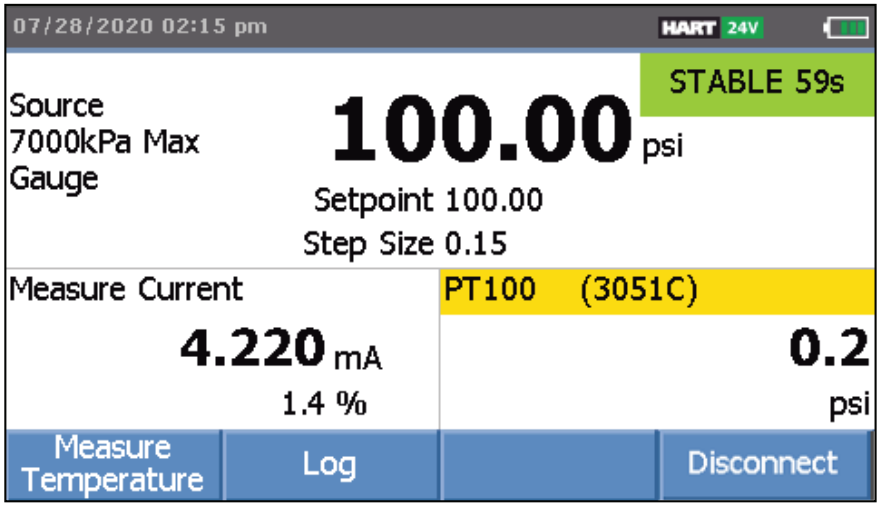

RTD Connection

The display can show RTD temperature measurements in the selected unit (C/F) as the third-function. When the temperature unit field highlights, push the softkey to toggle the temperature setting. The Ω reading shows.

Note

The Product supports PT100-385 RTD only.

원문: Fluke FLUKE-729PRO 메뉴얼 · 제조사 원문 자료입니다. 사양은 제조사 사정에 따라 변경될 수 있습니다.

Pressure Module Connection

The Product automatically detects external pressure module installation or removal. Move the cursor to the unit type and push ENTER to configure the pressure-unit type (it can be different from the pressure unit of internal pressure). Change the unit type of the internal pressure to automatically change the unit type of the pressure module.

Figure 3 shows a pressure module as the third function.

- When you plug in an external pressure module, the pressure-unit type defaults to the internal pressure unit type.
- When you remove or install an external pressure module, the zero offset resets.

Figure 3. Triple-Function Display with External Pressure Module Connected

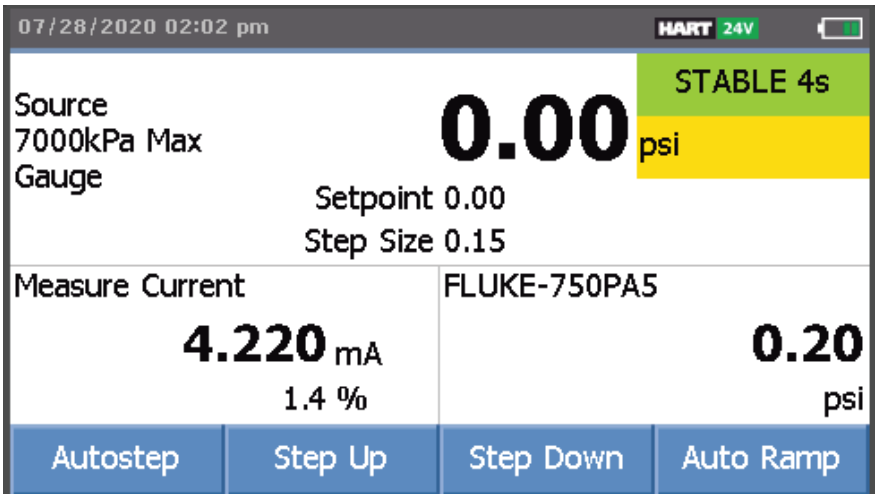

원문: Fluke FLUKE-729PRO 메뉴얼 · 제조사 원문 자료입니다. 사양은 제조사 사정에 따라 변경될 수 있습니다.

Ports

Table 4 is a list of the Product ports.

Table 4. Product Ports

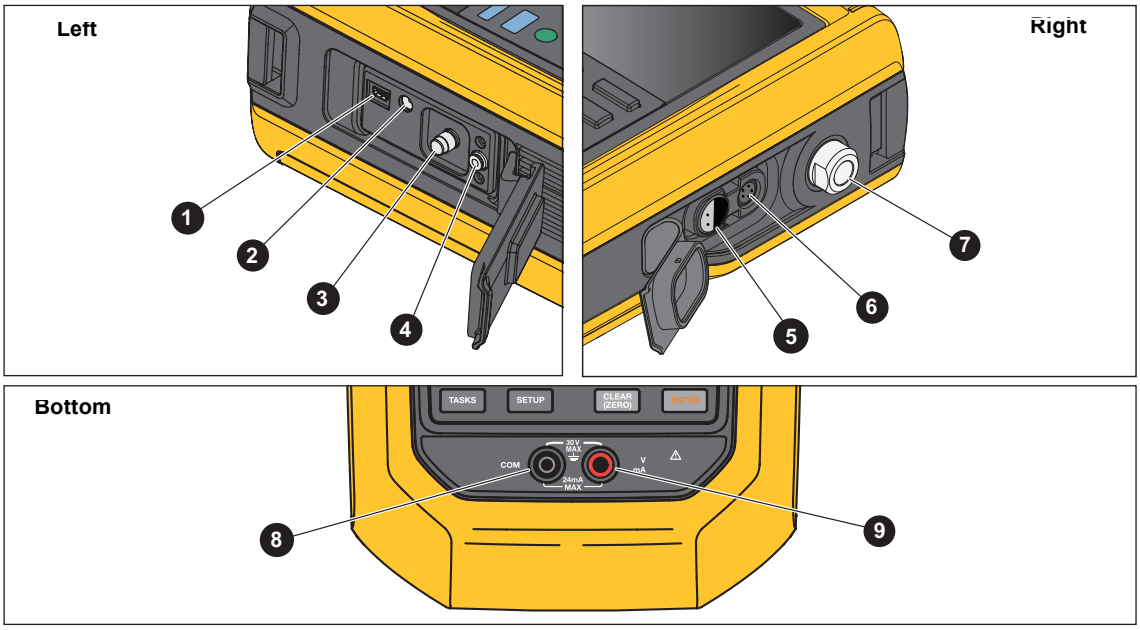

Item	Description
1	USB port – Used for communication between the Product and a PC.
2	Battery charger/universal power supply port. Use the battery charger for bench-top applications that have ac line power available. Use the battery charger to charge the battery while installed in the Product.
3	Rotate knob to drain water (condensation). See *Maintenance Menu*.
4	Drain port fitting connector.
5	External temperature port for RTD Temperature Probe
6	External pressure module port
7	Pressure connection
8	COM Port
9	Measure, source, and simulate mA; measure V dc and supply loop power.

원문: Fluke FLUKE-729PRO 메뉴얼 · 제조사 원문 자료입니다. 사양은 제조사 사정에 따라 변경될 수 있습니다.

Setup Menu

Use the multi-page Setup menu to configure the Product features.

Note

*For some of the submenu functions, the Product password is required. The default password is **1234**.*

To access the Setup menu, push SETUP. The Setup menu includes submenus for Product configuration.

The submenus are:

1. 729 Pro Information
2. 729 Pro Setup
3. Manage Users
4. Manage Test Results
5. Manage Screen Shots
6. Manage Custom Tasks
7. Maintenance

Push the arrow buttons, SELECT, or ENTER to access these submenus. Alternatively, push the corresponding number button for access. Push BACK to go to the previous menu.

To clear all stored files, push F4 **(Clear All Files)**. Enter the Product password to use this function. This action clears all stored test results, screen shots, and custom tasks.

The subsequent sections explain the Setup menu and submenus.

원문: Fluke FLUKE-729PRO 메뉴얼 · 제조사 원문 자료입니다. 사양은 제조사 사정에 따라 변경될 수 있습니다.

729 Pro Information

The 729 Pro Information submenu is an information-only screen that shows information about the Product. The screen shows:

- Product model
- Serial Number
- Firmware Revision: Main, PCM, EMM, and PMM
- PMM Model
- PMM Serial Number
- Last calibration date of the Product pressure components.
- Last calibration date of the Product electrical components.

The softkeys at the bottom of this screen are:

- **F1 - Calibrate Pressure**

  Follow the prompts on the screen and the Product takes you through a procedure that calibrates the pressure components of the Product. Enter the Product password to use this function. **F4** (**Options**) lets you save the calibration, go back a step, skip a step, or move to the next section. See *Calibration Manual* for details.

- **F2 - Calibrate Electrical**

  Follow the prompts on the screen and the Product takes you through a procedure that calibrates the electrical components of the Product. Enter the Product password to use this function. **F4** (**Options**) lets you save the calibration, go back a step, skip a step, or move to the next section. See *Calibration Manual* for details.

- **F3 - Battery Information**

  An information-only screen that shows if the battery is present, the remaining battery charge level, battery temperature, and battery voltage.

원문: Fluke FLUKE-729PRO 메뉴얼 · 제조사 원문 자료입니다. 사양은 제조사 사정에 따라 변경될 수 있습니다.

729 Pro Setup

The 729 Pro Setup submenu shows the information in Table 5.

Table 5. 729 Pro Setup Menu

Menu Parameter	Function
Language	Push ENTER and use the arrows to select the UI language: **English, Simplified Chinese**
Date and Time	Push ENTER and use the arrows to access the Date and Time menu. Once inside the menu, use the arrows to select a parameter and use the number keys to make changes to these settings. For am or pm, push SELECT. Once you make changes, push F4 (**Done**) to store the new parameters. The timestamp saves with any stored results.
Date Format	Set the format of the date. Use the softkeys to select **yyyy-mm-dd**, **mm/dd/yyyy**, or **dd/mm/yyyy**.
Time Format	Push the softkey to select **12-hour** or **24-hour** time format. The format changes in the Date Format menu. ENTER or SELECT also changes the format.
Number Format	Push the softkey to select a decimal point or comma for the numbering format. Push ENTER or SELECT also changes the format.
Temperature Unit	Push the softkey to select °**C** or °**F**. ENTER or SELECT also changes the units.
Auto Battery Timeout	The Product has a programmable Auto Battery Timeout feature to save the battery charge. Push the arrow keys to highlight this line. Push ENTER or SELECT to reach the timeout menu. The choices are: • **Never** • **5 minutes** • **10 minutes** • **15 minutes** • **30 minutes** • **60 minutes**
PCM Resolution	Choices are **High** and **Low**. High resolution is the normal state, and Low reduces the resolution one digit.
HART Communication	**Enable/Disable**

원문: Fluke FLUKE-729PRO 메뉴얼 · 제조사 원문 자료입니다. 사양은 제조사 사정에 따라 변경될 수 있습니다.

Manage Users

The Manage Users submenu controls access to add or delete Product user names from this menu.

To add a new user:

1. Push F1 (**New**).

   Use the onscreen keyboard to add a new user. Push the softkeys for **Capslock ON** (or **OFF**), **Backspace**, and to complete the entry F4 (**Done**).
2. Push the arrows to highlight each letter.
3. Push SELECT or ENTER to choose the letter.
4. When finished, push F4 (**Done**) to return to the Manage Users screen.

To delete an existing user:

1. Push the arrows to highlight a user.
2. Push F4 (**Delete**).

Manage Test Results

The Product saves the test results (As Found and As Left) and saves the calibration results.

1. In the Setup menu, push the arrow buttons to highlight **Manage Test Results**.
2. Push ENTER to show a list of tests. The tests are designated by date and time, Tag ID, and serial number.
3. Push the arrow buttons and ENTER or SELECT to view the selected test results.
4. Push F1 to select the As Found or As Left test result.
5. Push F4 to redo the calibration and save a new test result.

To delete all test results:

1. Go to the **Manage Test Results** screen.
2. Push F4 (**Delete All**).
3. Confirm to delete all records.
4. Push F3 (**OK**) to delete all records or F4 (**Cancel**) to escape the deletion process.

원문: Fluke FLUKE-729PRO 메뉴얼 · 제조사 원문 자료입니다. 사양은 제조사 사정에 따라 변경될 수 있습니다.

Manage Screen Shots

The Product can take screen shots of any screen and store them.

To take a screen shot:

1. Go to the screen to save.
2. Push and hold HOLD. The Product shows **File Saved**.

To view the screen shots:

1. From the Setup menu, push the arrows to highlight **Manage Screen Shots**.
2. Push ENTER or SELECT. The Product shows a list of screenshots and their time and date stamps.
3. Use the arrows to highlight a screen shot.
4. Push ENTER or SELECT and the screen shot is shown. The screen shows:

   You are reviewing a screen copy!

5. Push F4 to delete the individual screen.

Manage Custom Tasks

Use this submenu to delete custom tasks (see *Tasks Menu*). To delete a single task, use the arrow to select a custom task and push F1 (**Delete**). To delete all of the tasks, push F4 (**Delete All**).

Maintenance Menu

Maintenance has these operations:

- Drain Water (condensation)
- Keypad Test
- PMM Calibration (see *Calibration Manual*)
- Supply Sensor Self Calibration (see *Calibration Manual*)

Drain Water (Condensation)

To drain condensation from the Product, see Figure 4:

1. Connect the hose to collect drained water.
2. Push F4 (**Continue**).
3. The display shows:

   Creating pressure, please standby.

   The pump works to establish a pressure.

원문: Fluke FLUKE-729PRO 메뉴얼 · 제조사 원문 자료입니다. 사양은 제조사 사정에 따라 변경될 수 있습니다.

4. To let the water out, turn the knob counterclockwise on the side of the Product.
5. Push **F4** to repeat the drain operation.
6. When finished with water drain, push in on the fitting to release the hose.
7. Turn the knob clockwise after you drain the water.

Note

Make sure this knob is tight. Otherwise, a leak can occur.

Figure 4. Drain Water from Product

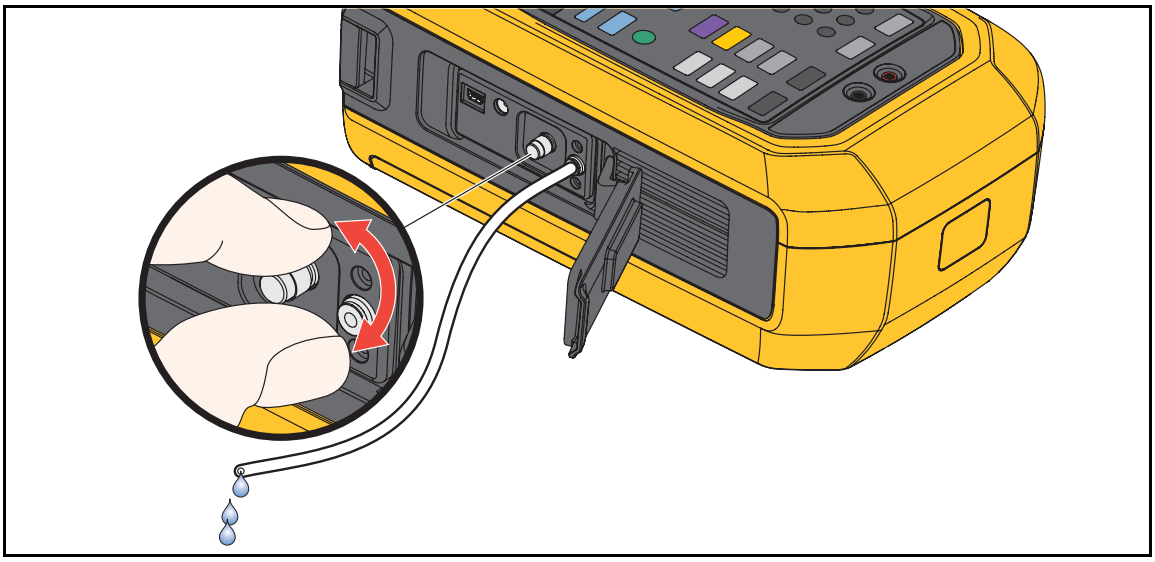

Keypad Test

Use this screen to check the Product buttons. Push any button and verify the on-screen response.

For the power button, push and hold for 2 seconds.

Exhaust

The Exhaust function releases all pressure inside the Product including the pressure reservoir. This reservoir keeps the pressure stable and provides pressure if only small pressure steps are necessary.

1. Push **F1** for **Exhaust**.
2. Push **F1** for **Abort** when done.

Tasks Menu

Tasks let you set up calibration and measurement tasks to save and recall for later use. All tasks require that an interchangeable pressure measurement module is installed in the Product. A P/P task requires a pressure module (750P) is connected to the Product.

To go to the Tasks menu, push TASKS. The Tasks menu has these submenus:

- Pressure Transmitter (P/I)
- Pressure Switch (SW)
- Current to Pressure Test (I/P)
- Pressure Leak Test
- Pressure Transmitter (P/V)
- Pneumatic Pressure Transmitter (P/P)

Pressure Transmitter (P/I)

Use this function to calibrate a P/I transmitter (pressure to current) with current measurement. See Figure 5 for connections:

1. From page 1 of the Tasks menu, push the arrows to highlight **Pressure Transmitter (P/I)**.
2. Push ENTER or SELECT.
3. From this screen, use the arrows, numeric keypad, and ENTER to change the values of the Source Pressure and Measure Current.
   a. Push F2 (**PV Calibrate**) if HART is enabled and PV calibration is necessary.
   b. Push F3 to turn on (or off) 24 V loop power.
   c. Once these values are specified, push F4 (**Continue**).
4. From this second screen, use the arrows, numeric keypad, and ENTER to change the values of the Tolerance of Range, Test Strategy, Auto Settling Time, and Transfer Function.
   a. Push F1 to change the Transfer Function to Square Root or Linear.
   b. To select the Test Strategy, highlight the parameter and push SELECT. Highlight the applicable listed test strategy and push ENTER.
   c. Push F2 (**Save as Customized**) to store this task for later use.
   d. Once you enter the parameters, push F4 (**Continue**).
5. Push F2 (**Manual Test**) or F4 (**Auto Test**).
6. Push F3 to adjust. Go to **0%**, **50%**, and **100%**.
7. Push F1 (**As Left**) to do the As Left test.

원문: Fluke FLUKE-729PRO 메뉴얼 · 제조사 원문 자료입니다. 사양은 제조사 사정에 따라 변경될 수 있습니다.

Figure 5. Pressure Transmitter (P/I) Task Connections

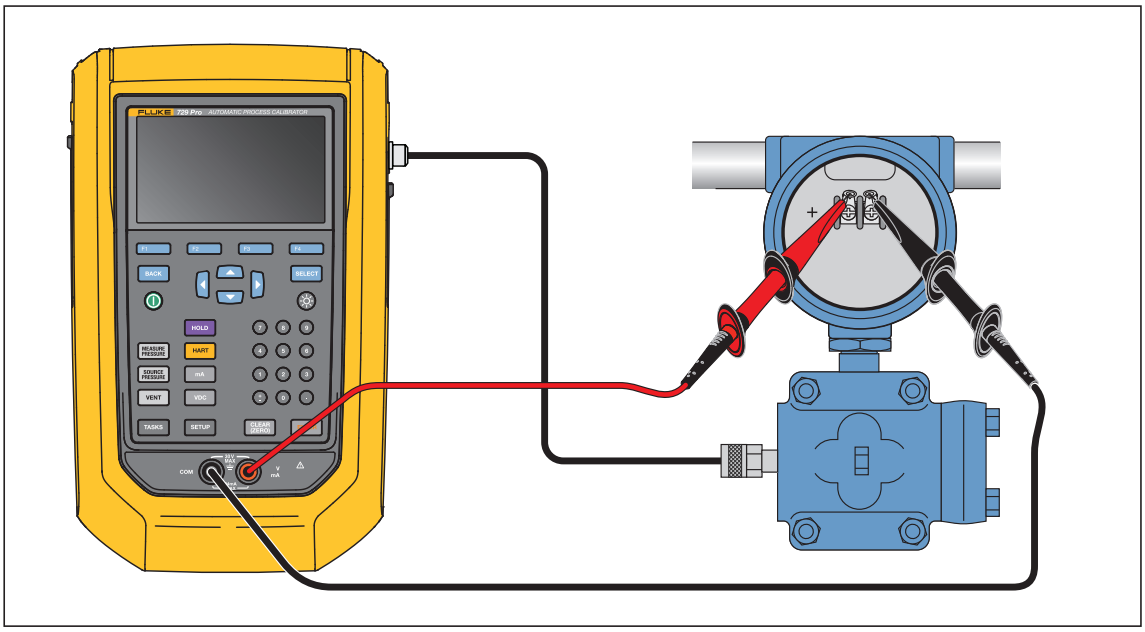

Pressure Switch (SW)

Use this feature to calibrate a pressure switch. See Figure 6 for connections:

1. From page 1 of the Tasks menu, push the arrows to highlight **Pressure Switch (SW)**.
2. Push ENTER or SELECT.
3. From this screen, use the arrows, numeric keypad, and ENTER to change the values of these parameters:
   - Setpoint
   - Tolerance
   - Min Deadband
   - Max Deadband
   - Max Pressure
   - Switch Type

   Note

   Make sure to push ENTER after EACH value change.

   You can save these settings as a customized task. Push F2 (**Save as Customized**). Recall this customized task from the Tasks menu.
4. Once you enter the parameters, push F4 (**Continue**).

원문: Fluke FLUKE-729PRO 메뉴얼 · 제조사 원문 자료입니다. 사양은 제조사 사정에 따라 변경될 수 있습니다.

5. Push **F4** (**Auto Test**) or **F2** (**Manual Test**) to do the As Found switch test. The test runs.

   After the test runs, the results show on the display.

To save the test results:

1. Push **F4** (**Done**).
2. Push **ENTER** to edit the Tag information.
3. Push **F4** (**Done**).
4. Move the cursor to the S/N field (Serial Number) push **ENTER** to edit the S/N information.
5. Push **F4** (**Done**).
6. Move the cursor to the User ID field and push **F1** (**User List**) to select a user.
7. Push **F4** (**Done**).
8. Adjust the switch and push **F2** (**Step Up**) and **F3** (**Step Down**) to verify.
9. Push **F1** (**As Left**) to do the As Left test.

Figure 6. Switch Test Connections

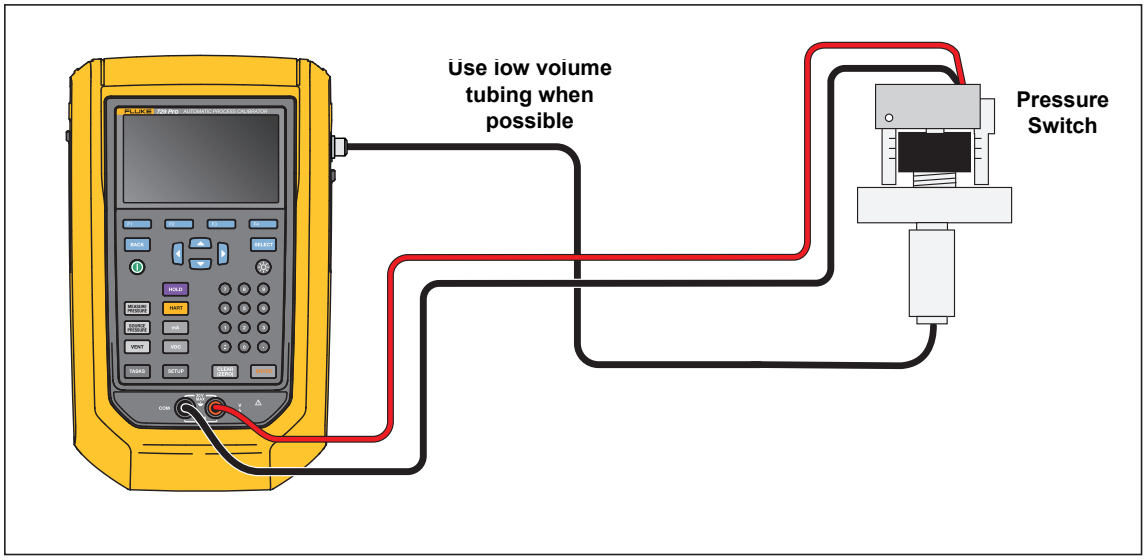

원문: Fluke FLUKE-729PRO 메뉴얼 · 제조사 원문 자료입니다. 사양은 제조사 사정에 따라 변경될 수 있습니다.

Current to Pressure Test (I/P)

Use this feature to calibrate a current to pressure (I/P) converter with current source and pressure measurements. See Figures 7 and 8:

1. From page 1 of the Tasks menu, push the arrows to highlight **Current to Pressure Test (I/P)**.
2. Push ENTER or SELECT.
3. From this screen, use the arrows, numeric keypad, and ENTER to change the values of the source current and measure pressure.

   Note

   Make sure to push ENTER *after EACH value change.*

4. Once you enter the values, push F4 (**Continue**).

   Tolerance of Range, Test Strategy, and Auto Settling Time can be set from here.

   To save these settings as a customized task, push F2 (**Save as Customized**). You can then recall the saved task from the Tasks menu.
5. Once you enter the parameters, push F4 (**Continue**).
6. Push F2 (**Manual Test**) or F4 (**Auto Test**).
7. Adjust with F3 to go to **0%**, **50%**, and **100%**.
8. Push F1 (**As Left**) to do the As Left test.

Figure 7. Current to Pressure Test (I/P) with External Pressure Module

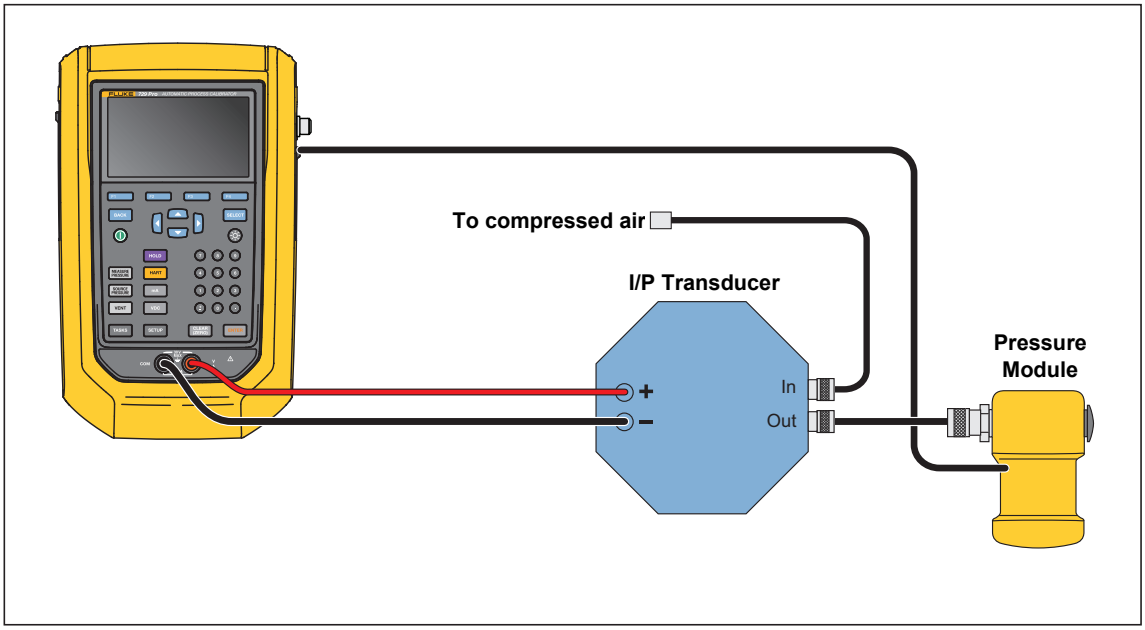

Figure 8. Current to Pressure Test (I/P) with Internal Connections

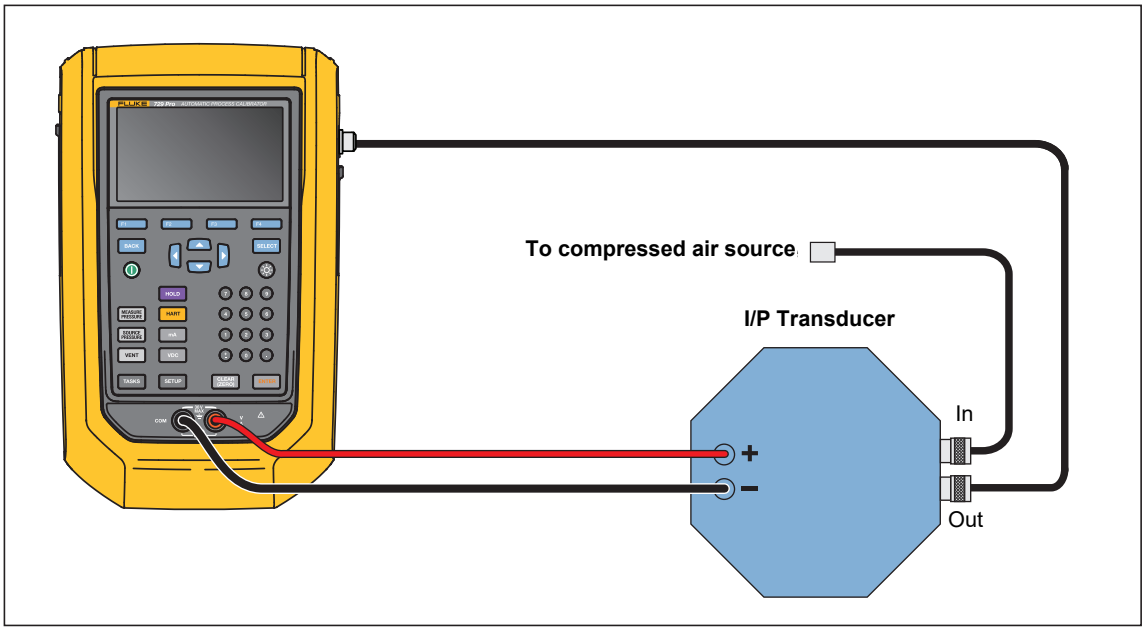

Pressure Leak Test

Use this feature to test a pressure device for leaks. For connections, see Figure 9.

1. From this screen, use the arrows, numeric keypad, and ENTER to change the values of these parameters:
   - Setpoint (Pressure value)
   - Settling Time
   - Test Time

Note

Make sure to push ENTER *after EACH value change.*

2. Push F4 (**Continue**). When the pressure leak test completes, the Product shows the results. Results include Start Pressure, End pressure, Test time, and Leak rate.

원문: Fluke FLUKE-729PRO 메뉴얼 · 제조사 원문 자료입니다. 사양은 제조사 사정에 따라 변경될 수 있습니다.

Pressure Transmitter (P/V)

Use this feature to calibrate a pressure to voltage transmitter with voltage measurement. For connections, see Figure 5.

1. From page 1 of the Tasks menu, push the arrows to highlight **Pressure Transmitter (P/V)**.
2. Push ENTER or SELECT.
3. From this screen, use the arrows, numeric keypad, and ENTER to change the values of the source pressure and measure voltage.
4. Push F4 (**Continue**) to edit these other parameters:
   - Tolerance of Range
   - Test Strategy
   - Auto Settling Time
   - Transfer Function F1 (**Linear or Square Root**).
5. Push F2 (**Save as Customized**) to save these settings as a customized task. Recall these customized tasks from the Tasks menu at any time.

원문: Fluke FLUKE-729PRO 메뉴얼 · 제조사 원문 자료입니다. 사양은 제조사 사정에 따라 변경될 수 있습니다.

Pressure Transmitter (P/P)

To calibrate a pressure-to-pressure transmitter, use this feature. This feature requires a pressure module to measure pressure output from a connected transmitter.

To use the function, see Figure 9:

1. From page 1 of the Tasks menu, push the arrows to highlight **Pressure Transmitter (P/P)**.
2. Push ENTER or SELECT.
3. From this screen, use the arrows, numeric keypad, and ENTER to change the values of the source pressure and measure pressure.
4. Push F4 (**Continue**) and these parameters can be edited:
   - Tolerance of Range
   - Test Strategy
   - Auto Settling Time
5. Push F2 (**Save as Customized**) to save these settings as a customized task. Recall this customized task from the Tasks menu at any time.

Figure 9. Pressure Transmitter (P/P) Connections

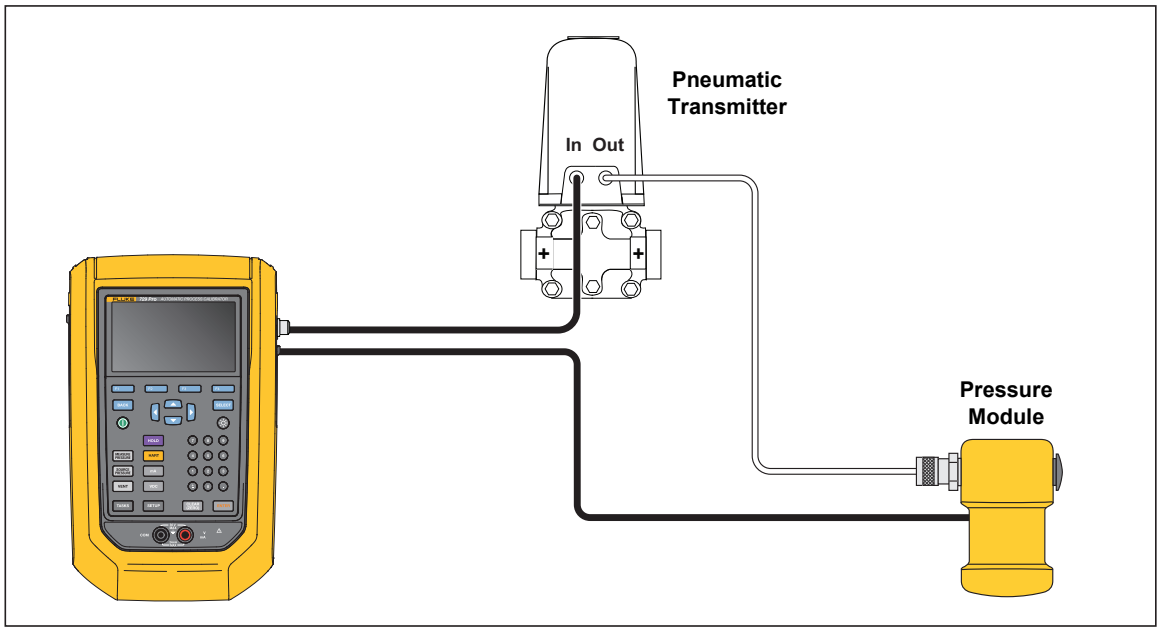

원문: Fluke FLUKE-729PRO 메뉴얼 · 제조사 원문 자료입니다. 사양은 제조사 사정에 따라 변경될 수 있습니다.

HART Functionality

The Product interfaces with HART devices. It can:

- View and modify transmitter setup and data that includes:
  - Write Lower Range Value (LRV)
  - Write Upper Range Value (URV)
  - Write PV Unit
  - Write Message and Descriptor
  - Write Damping Value
  - Write Date
- Perform service features including:
  - PV Zero Trim
  - mA Output Trim
  - Trim to Applied Values
  - Set Fixed mA Output
  - Re-range Transmitter
  - Device Diagnostics
- Perform HART calibration without using a Task (Ad hoc)
- Perform HART calibration from a downloaded Task

Push HART and the Product searches (polls) the bus to find any connected HART devices. From this screen, there are these softkeys:

F1 - **Communicator Only**

F2 - **Loop Power +24V ON**

F3 - **Enable HART 250Ω**

F4 - **Restart BUS Polling**

Once Polling finds the transmitters, move the cursor to the tag number and push F4 (**Continue**) to select.

원문: Fluke FLUKE-729PRO 메뉴얼 · 제조사 원문 자료입니다. 사양은 제조사 사정에 따라 변경될 수 있습니다.

Loop Power +24V ON

The Product supplies loop power at 24 V dc to a current transmitter disconnected from the system. To supply 24 V loop power:

1. From the HART menu, push **F2** (**Loop Power +24V ON**). The Product polls the bus to see if a transmitter is connected.
2. With the transmitter disconnected from normal loop power, connect the Product test leads in series with the instrument current loop as shown in Figure 10.

   The mA display shows measure loop current.

Figure 10. Connection with Loop Power Enabled

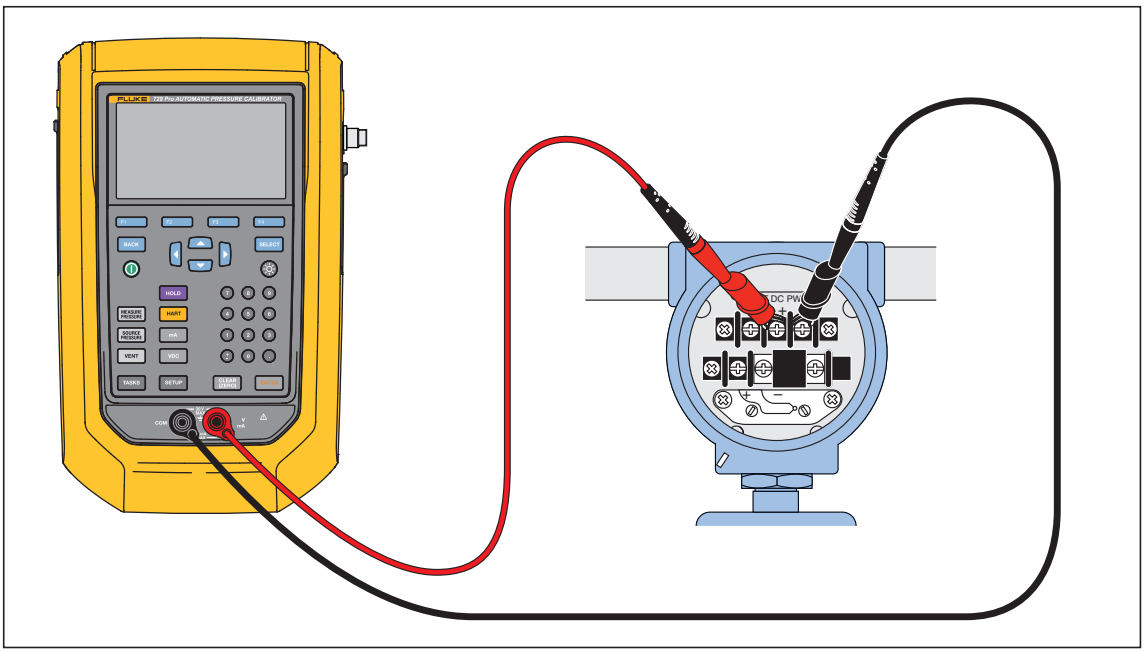

Enable HART 250Ω

The Product has a selectable 250 Ω HART resistor to facilitate use with HART devices. Enable the HART resistor when you connect the Product to a HART device. The HART resistor defaults to OFF.

To turn on or turn off the HART resistor, push **F3** (**Enable HART 250Ω**) or (**Disable HART 250Ω**).

원문: Fluke FLUKE-729PRO 메뉴얼 · 제조사 원문 자료입니다. 사양은 제조사 사정에 따라 변경될 수 있습니다.

HART Menu

The HART menu has these functions that configure and calibrate a HART device:

- HART Data
- HART Service
- Calibrate (Ad Hoc)
- Find Task by Tag
- Bus Polling

From the HART menu, push F1 (**Disconnect**) to disconnect from HART communication. Or, push F4 (**Continue**) to continue to the highlighted entry.

HART Data

The HART data screen shows information about the connected HART device. Push F2 (**Page Up**) or F3 (**Page Down**) where necessary.

You can modify these fields:

- Tag ID
- PV Unit Type
- Lower Range Value (LRV)
- Upper Range Value (URV)
- Damping
- Message
- Descriptor
- Date

HART Service

HART Service includes these submenus:

- PV Zero Trim
- mA Output Trim
- Trim to Applied Values
- Set Fixed mA Output
- Re-range Transmitter
- Device Diagnostics

원문: Fluke FLUKE-729PRO 메뉴얼 · 제조사 원문 자료입니다. 사양은 제조사 사정에 따라 변경될 수 있습니다.

Highlight the HART Service menu selection and push F4 (**Continue**). When you enter some of the submenus, a warning tells you to remove the loop from AUTOMATIC control. Push F4 (**Continue**).

PV Zero Trim

This function sets the digital pressure value of the transmitter to zero.

1. Push F3 (**Trim Zero**) to trim the PV output value to zero.
2. Push F4 (**Done**) when completed.

mA Output Trim

In the mA output trim screen, you can adjust the transmitter output.

1. Start with the 4 mA range. Push F1 (**Fetch**) to get the current measured mA value.
2. Push F2 (**Trim 4 mA**) to send the measured value for correction. Push F3 (**Next Point**). The Product moves to the 20 mA range.
3. Repeat steps 1 and 2.
4. When complete, push F3 to return to the previous point or F4 (**Done**).

Trim to Applied Values

1. Enter the LRV pressure value necessary in the Setpoint entry and then push ENTER and let the pressure settle.
2. Push F2 (**Trim LRV**) to trim the lower range of pressure applied.
3. Enter the necessary URV pressure value in the Setpoint entry and push ENTER and let the pressure settle.
4. Push F3 (**Trim URV**) to trim the upper range of pressure applied.

Set Fixed mA Output

Enter the necessary mA value to output from the connected transmitter:

- Push F2 (**Step Up 4mA**) to increase mA output in 4 mA steps.
- Push F3 (**Step Down 4mA**) to decrease mA output in 4 mA steps.

Re-range Transmitter

Change the Upper Range Value (URV) and the Lower Range Value (LRV) of the connected transmitter from this screen.

1. Enter the Upper Range Value (PV URV) necessary.
2. Push ENTER to select.
3. Push F3 (**Send**) to change the URV.

원문: Fluke FLUKE-729PRO 메뉴얼 · 제조사 원문 자료입니다. 사양은 제조사 사정에 따라 변경될 수 있습니다.

4. Enter the Lower Range Value (PV LRV) necessary.
5. Push ENTER to select.
6. Push F3 (Send) to change the LRV.

Device Diagnostics

Select Device Diagnostics to send the self-diagnostics command to the connected transmitter and view the transmitter Self Test result.

Calibrate (Ad hoc)

Calibrate (Ad Hoc) calibrates a connected HART device without a downloaded task.

The opening screen shows the task type and source/measure configuration for the device. The transmitter HART configuration is copied into this configuration screen.

Correct as needed for your test:

1. Push F2 (**PV Calibrate**) to change the measure from mA to the PV source value of the transmitter.
2. Push F3 (**Disable/Enable Loop Power**).
3. Push F4 (**Continue**) to continue to second configuration screen. These choices are shown:
   - Tolerance of Range
   - Test Strategy
   - Auto Settling Time
   - Transfer Function

These softkeys are active:

F1 – Linear/Square Root Selection

F2 – Save as Customized

F3 – Leak Test

F4 – Continue

The next screen starts the As Found Calibration. These softkeys are active:

F1 – Abort

F2 – Manual Test

F4 – Auto Test

Test results show after all strategy points have recorded the measurements. Measurements within specification show as black. Measurements out of specification show as red.

1. Push F4 (**Done**) or F1 (**Abort**).
2. Enter the Tag ID, serial number of the device, and the User ID.
3. Push F4 (**Done**).

Adjust

Push F2 (**HART Adjust**). These choices are shown:

- PV Zero Trim
- mA Output Trim
- Trim to Applied Values

PV Zero Trim

To set the digital pressure value of the Product to zero:

1. Push F3 (**Trim Zero**).
2. Push F4 (**Done**).

mA Output Trim

From the mA output trim screen, you can fetch the current PV value and send this value to the transmitter to adjust the PV to the correct mA output.

1. Starting with the 4 mA range, push F1 (**Fetch**) to get the current measured mA value.
2. Push F2 (**Trim 4mA**) to send the measured value for correction.
3. Push F3 (**Next Point**). The Product moves to the 20 mA range.
4. Repeat steps 1, 2, and 3.
5. When complete, push F3 to return to the previous point or F4 (**Done**).

Trim to Applied Values

1. Enter the LRV pressure value necessary in the Setpoint entry and let the pressure settle.
2. Push F2 (**Trim LRV**) to trim to the lower range of pressure applied.
3. Enter the URV pressure value necessary in the Setpoint entry and let the pressure settle.
4. Push F3 (**Trim URV**) to trim to the upper range of pressure applied.

원문: Fluke FLUKE-729PRO 메뉴얼 · 제조사 원문 자료입니다. 사양은 제조사 사정에 따라 변경될 수 있습니다.

As Left

Push **F4** (**As Left**). Repeat the procedure from *As Found*.

Calibration results save to the Test Results menu.

Find Task by Tag

Downloaded tasks from DPCTrack2 or other supported software are shown:

1. Use the up and down arrows to scroll through the tasks.
2. Push **F2** (**Page Up**) or **F3** (**Page Down**) where necessary.
3. Push **F4** (**Recall**) to recall the highlighted task.

Bus Polling

Bus Polling goes back into the bus polling screen and scans for connected HART devices. If no HART device is found after Polling is complete, push **F4** (**Restart Bus Polling**) to restart bus polling to search of the Product BUS for HART devices. The Product locates the device.

Measure Mode

The measure mode has these functions:

- mA dc measure
- mA dc source
- mA dc simulate
- V dc measure
- Switch (continuity)

The lower left of the display shows the operation mode.

Current Measurement

The Product measures 0 mA to 24 mA. Move the cursor to highlight **Measure Current**. Push **F3** to **Source Current**. Push **F4** to **Simulate Current**.

원문: Fluke FLUKE-729PRO 메뉴얼 · 제조사 원문 자료입니다. 사양은 제조사 사정에 따라 변경될 수 있습니다.

Volts Measurement

The Product measures 0 V dc to 30 V dc. Figure 11 shows measurement connections for voltage measurements.

Figure 11. VDC Measurement Connections

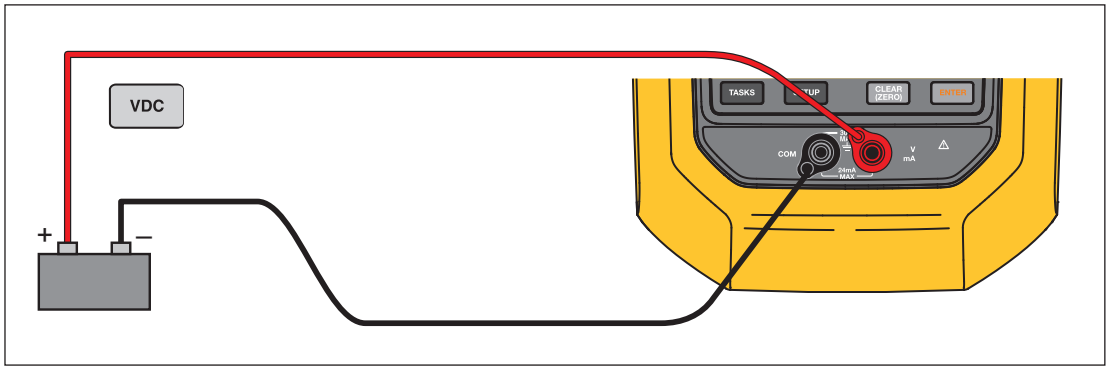

Pressure Measurement

The Product supports the 700P and 750P series pressure modules.
See *User-Replaceable Parts and Accessories*. Before you use a pressure module, read the instruction sheet. The modules are different in how they are used, zeroed, what types of process pressure media are allowed, and accuracy specifications.

Figure 12 shows gage and differential modules. Differential modules also operate in gage mode when you leave the low fitting open to atmosphere.

Figure 12. Gage and Differential Pressure Modules

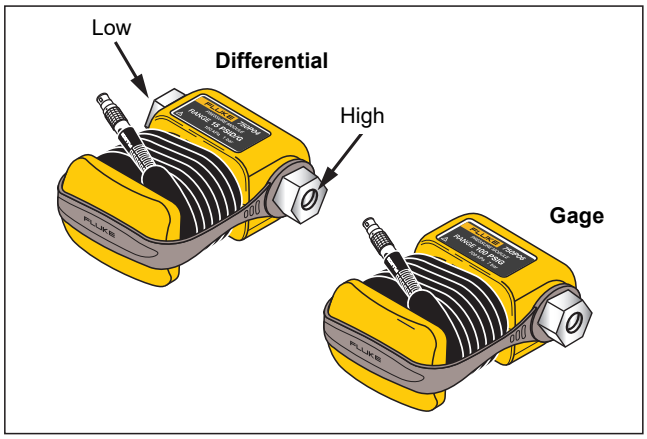

원문: Fluke FLUKE-729PRO 메뉴얼 · 제조사 원문 자료입니다. 사양은 제조사 사정에 따라 변경될 수 있습니다.

To measure pressure:

1. Attach the applicable pressure module for the process pressure you will test as described in the instruction sheet for the module.

   ⚠ Warning

   To prevent personal injury, shut off the valve and slowly bleed off the pressure before attaching the pressure module to the pressure line to avoid a violent release of pressure in a pressurized system.

   ⚠ Caution

   To prevent possible damage to the Product or to equipment under test:

   - **Never apply more than 10 lb-ft. of torque between the pressure module fittings, or between the fittings and the body of the module.**
   - **Always apply correct torque between the pressure module fitting and connecting fittings or adapters.**
   - **Never apply pressure above the rated maximum printed on the pressure module.**
   - **Use the pressure module only with specified materials. See the printing on the pressure module or the pressure module instruction sheet for the acceptable material compatibility.**

2. Connect a pressure module to the Product as shown in Figure 13. The pressure module shows on the display after several seconds once installed.

   The Product automatically senses the pressure module attached and sets the range accordingly.

   Note

   Before doing a task that sources or measures pressure, zero the Product.

3. With the pressure module highlighted in the third screen, push **F4** (**Zero External**) to zero the pressure. When zeroing absolute pressure modules, enter the current barometric pressure when the displayed value turns to yellow highlight.

4. Zero the pressure on the module. See the Instruction Sheet for the module. Modules can have different zeroing procedures that depend on module type.

원문: Fluke FLUKE-729PRO 메뉴얼 · 제조사 원문 자료입니다. 사양은 제조사 사정에 따라 변경될 수 있습니다.

Figure 13. Pressure Module Connections

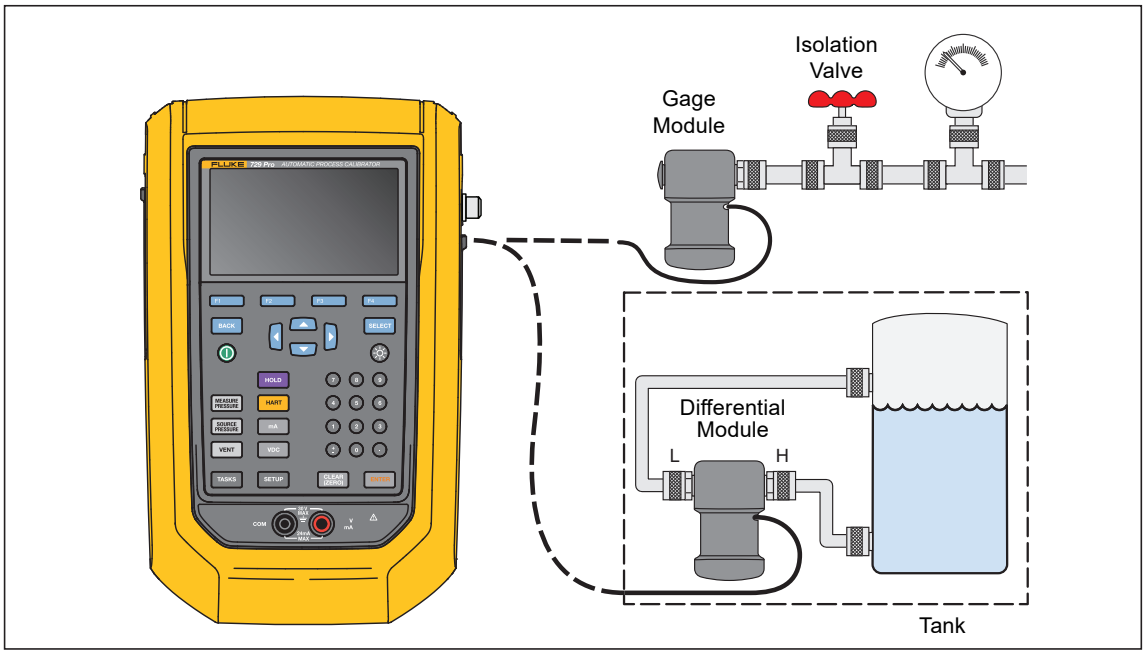

Autostep and Auto Ramp the Output Value

Autostep and Auto Ramp can automatically adjust the value of source functions for pressure or current.

Autostep

To configure the Product to make a sequence of steps that run automatically:

1. Connect the Product to the test circuit.
2. From the main screen, push **F1** (**Autostep**).
3. Set the Product for the necessary source function:
   - **F2** (**Pressure**)
   - **F3** (**Current**)
4. From this screen, use the arrows, numeric keypad, and **ENTER** to change the values of Start and End Values, Number of Steps, and time for each step.
5. Select the Repeat Mode:
   - **F2** (**One Time**)
   - **F3** (**Repetitive**)

원문: Fluke FLUKE-729PRO 메뉴얼 · 제조사 원문 자료입니다. 사양은 제조사 사정에 따라 변경될 수 있습니다.

6. Select the Step Style:
   - F2 (**Sawtooth**)
   - F3 (**Triangle**)
7. Push F4 (**Start**).

   The Product automatically starts the step function. The softkey label changes to **Stop Step**.
8. Push the F4 (**Stop Step**) to stop the automatic step function.
9. Push the **Done** softkey to continue normal operation.

Auto Ramp the Output

When ramped, the source sweeps up or down in value. Use the Auto Ramp feature to verify a switch or alarm, or when a smooth increase or decrease of the output function is necessary.

To ramp up Pressure or Current:

1. From the main screen, push F4 (**Auto Ramp**).
2. Set the Product for the necessary source function:
   - F2 (**Pressure**)
   - F3 (**Current**)
3. Use the arrows, numeric keypad, and ENTER to change the Start Values, End Values, and Slew Rate (Ramp Time).
4. Select the Repeat Mode:
   - F2 (**One Time**)
   - F3 (**Repetitive**)
5. Select the Step Style:
   - F2 (**Sawtooth**)
   - F3 (**Triangle**)
6. Push F4 (**Start**).

While the signal ramps, the output adjusts to the value. The selection of endpoints and ramp time determines the size of steps. For example, if you set the Product to ramp from 1 mV to 1 V over 10 seconds, the output adjusts in approximately 25 mV steps. The Ramp function continues until you get the selected limit.

원문: Fluke FLUKE-729PRO 메뉴얼 · 제조사 원문 자료입니다. 사양은 제조사 사정에 따라 변경될 수 있습니다.

Temperature Measurement

To measure temperature with an RTD probe accessory, connect the probe into the RTD port on the right of the Product. Make sure the correct probe type is used. Use Fluke-720RTD PN 4366669 or the Fluke-720URTDA PN 4382695.

The standard probe has a 10-inch insertion depth with a ¼-inch diameter stainless steel sheath. See Figure 14.

Note

The factory default type is PT100-385 so if the Product is used with the Fluke 720 RTD Probe (PN 4366669), it is not necessary to set the probe type. Connect the probe to the Product and configure the display to read temperature.

*The display shows **OL** when the measured temperature is outside the nominal measurement range of the RTD function (<-40 °C or >150 °C).*

Figure 14. Temperature Probe Connection

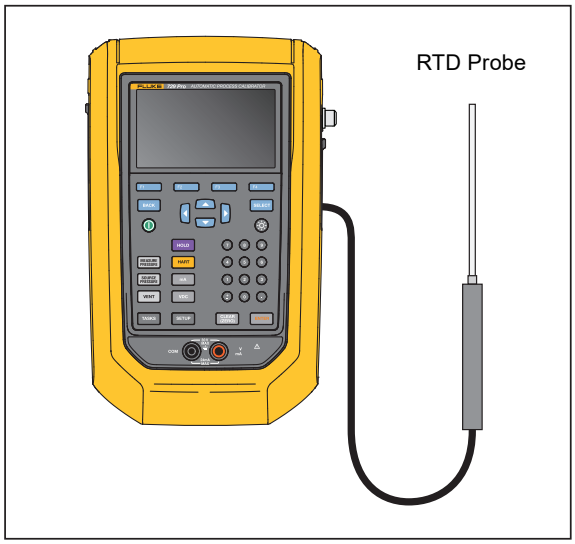

Source mA Mode

The operation mode (for example, measure or source) shows on the display. If the Product is not in mA source mode, push **mA**.

To source mA:

1. Connect the test leads as necessary.
2. Key in the necessary output value (for example, to source 5.5 mA, push **5** **.** **5** **ENTER**).
3. Push **ENTER**.

원문: Fluke FLUKE-729PRO 메뉴얼 · 제조사 원문 자료입니다. 사양은 제조사 사정에 따라 변경될 수 있습니다.

4. To change the output value, record a new value and push **ENTER**.
5. To set the output value in the present source function, push **CLEAR (ZERO)** then enter the desired value and push **ENTER**.
6. To turn off sourcing completely, select another function.

Note

Use the source current function to drive a current input device. This is different from the loop power function in which the Product is the power source for a process instrument.

4 to 20 mA Simulation

To configure the Product as a load on a current loop:

1. Move the cursor to the analog function indicator and push **F4** (**Simulate Current**).
2. Enter the necessary value.
3. Connect an external loop supply to the mA port. See Figure 15.

Figure 15. Connections to Simulate a 4 to 20 mA Transmitter

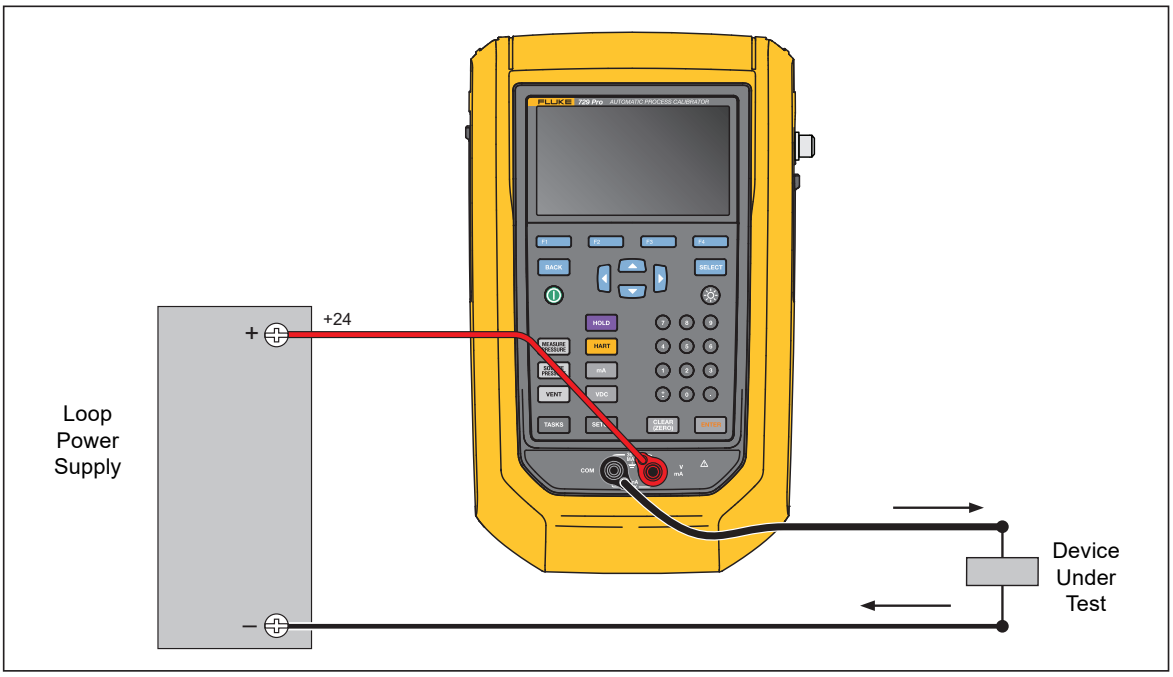

원문: Fluke FLUKE-729PRO 메뉴얼 · 제조사 원문 자료입니다. 사양은 제조사 사정에 따라 변경될 수 있습니다.

Log

Users can record a series of pressure or mA measurements for later upload to a host computer. The Product records a maximum of 8000 readings, depending on the reading rate, duration, and how much memory is in use for other functions such as tasks or stored results. Record the reading rate and duration in minutes.

To log data:

1. From the main screen, push F2 (**Log**).
2. Adjust the Reading Rate and Duration with the arrow buttons and then push ENTER to select parameters from the Log screen.
3. Choose the Log Source from any of the available measured values with F1, F2, or F3.

   The log source can be internal pressure, external pressure, mA, V dc, HART PV, or temperature.

   a. For **Reading Rate**: push ENTER to adjust the reading rate from 1/m to 60/m.

   b. For **Duration**: use the numeric keypad to record the duration in minutes, followed by ENTER.

   The maximum depends on the reading rate and how much memory is available to log data.
4. Push F4 (**Start**) to begin.

   The Product logs the measured values of the selected source for the preselected duration.
5. Push F1 (**Abort**) to stop logging.

Results show after the Product logs the data. Push F1 (**Abort**) or F4 (**Done**). If you push F4 (**Done**), enter Tag, S/N, and a User ID. The Product saves the results and are recalled under the Setup>Manage Test Results menu. Upload the logged Product data to DPCTrack2 for review in a graphical report.

원문: Fluke FLUKE-729PRO 메뉴얼 · 제조사 원문 자료입니다. 사양은 제조사 사정에 따라 변경될 수 있습니다.

Communication with a PC

Download procedures from a PC to the Product and upload test results to a PC from the Product. A PC, Microsoft Windows, USB cable (supplied), and Fluke *DPCTrack2*™ application software, or a qualified Fluke partner's software are required. See the *DPCTrack2 Users Manual* for further instructions. See Figure 16 for the connection.

Download DPCTrack2 Trial Version Software and the *DPCTrack2 Users Manual* from www.fluke.com/productinfo.

Figure 16. Connection to a PC

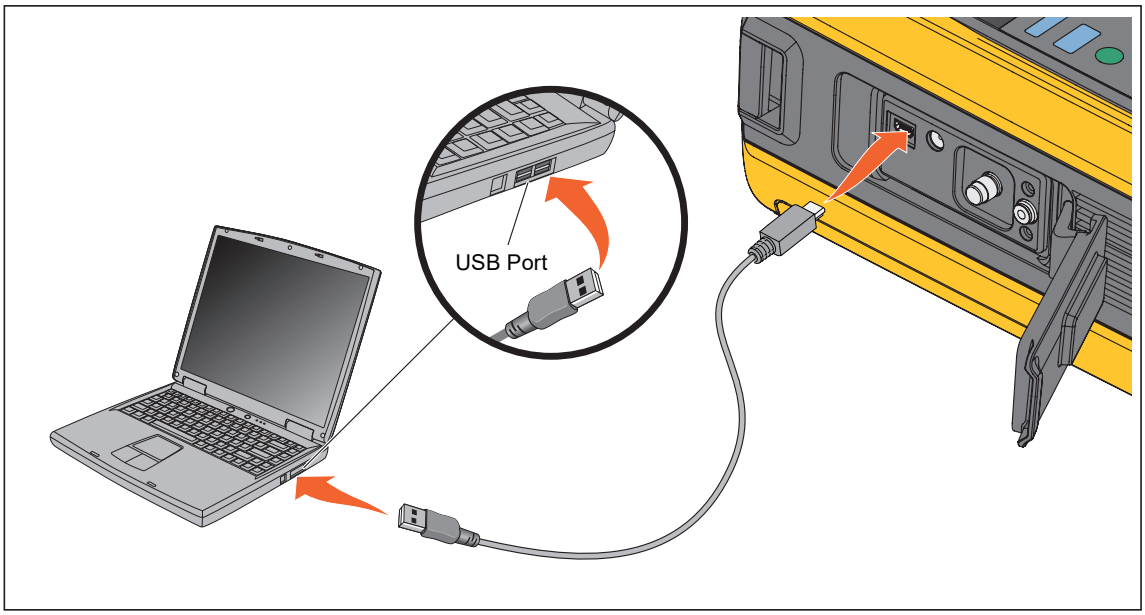

Battery

The Product features a rechargeable battery. Charge the battery while it is inside or outside of the Product. This allows you to have more than one fully-charged battery.

Charge the Battery

Before you use the Product, charge the battery. To charge the battery while in the Product, connect the battery charger to the Product. The battery fully charges in 8 hours.

To charge the battery outside of the Product:

1. See Figure 17 for battery access.
2. Place the Product face down.
3. Unlock the two fasteners to release the battery door.

4. Remove the battery door.
5. Remove the battery.
6. Connect the battery charger to the input on the battery.

The battery charge indicator (top-right of display) shows while the battery is outside of the Product. Solid green bars show the level of charge on the battery. When all bars are illuminated and solid, the battery is fully charged. The bars progressively illuminate to show that the battery is currently charging.

Battery Life

The battery charge indicator shows on the upper right of the display. Typical operation time for a new, fully charged battery:

- 20 hours in Measure, continuous operation mode
- 4 hours in Measure and source, with loop power on, continuous operation mode
- >6 hours in typical intermittent operation

Product performance meets its specification until the battery charge indicator reads empty.

Maintenance

The Product requires no maintenance.

In Case of Difficulty

⚠⚠ Warning

To prevent possible electrical shock, fire, or personal injury, do not use the Product if it operates abnormally. Protection may be impaired. When in doubt, have the Product serviced.

If the Product does not turn on, check the battery charge. Disconnect the battery charger. If the Product receives power, the power button is illuminated. If the button is illuminated, but the Product does not turn on, have the Product serviced. See *Contact Fluke*.

원문: Fluke FLUKE-729PRO 메뉴얼 · 제조사 원문 자료입니다. 사양은 제조사 사정에 따라 변경될 수 있습니다.

Battery Replacement

Replace the battery when it no longer holds a charge for the rated interval. The battery normally lasts for up to 300 charge/discharge cycles. To order a replacement battery, see *Contact Fluke* and *User-Replaceable Parts and Accessories*.

Note

Take spent batteries to a qualified recycler or hazardous materials handler for disposal. Contact an authorized Fluke Service Center for recycling information.

To replace the battery:

1. Push SETUP and select Maintenance.
2. Push F1 (**Exhaust**) to release Product internal pressure.
3. Turn the Product Off.
4. Remove test leads.
5. Make sure the Product is unplugged from its charger.
6. Turn the Product over.
7. Unlock the two fasteners to release the battery door. See Figure 17.
8. Remove the battery door.
9. Replace the battery.
10. Replace and lock the battery door.

Figure 17. Battery Replacement

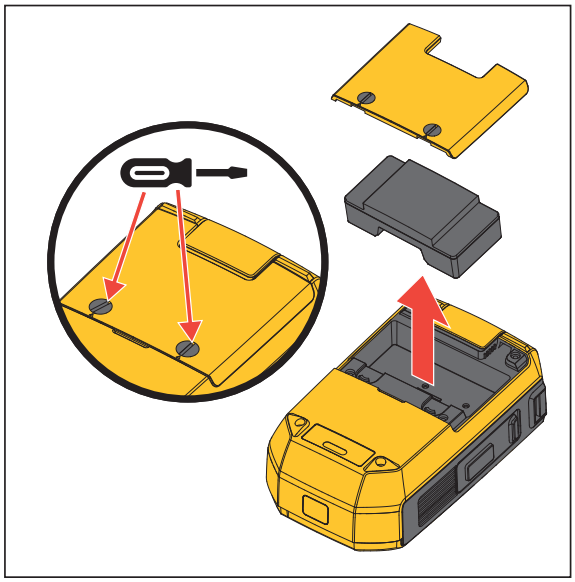

원문: Fluke FLUKE-729PRO 메뉴얼 · 제조사 원문 자료입니다. 사양은 제조사 사정에 따라 변경될 수 있습니다.

PMM Replacement

To replace the PMM:

1. Push the vent button.
2. Tilt the Product to drain the vent.
3. Open the module cover on the back of the Product. See Figure 18.
4. Release the knob on the PMM and remove the PMM.

Figure 18. PMM Replacement

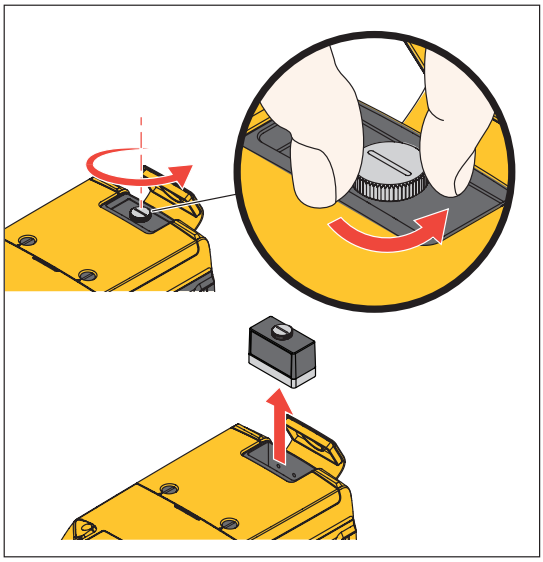

Update Product Firmware

To update the Product firmware version:

1. Turn on the Product.
2. Connect the USB cable (provided) to a PC. See Figure 16.
3. Use the PC to go to www.fluke.com/productinfo.
4. Click **Find your software**.
5. Search for **729 Pro**.
6. On the results page, select the **Software Downloads** tab.
7. Click on the necessary software link and read the instructions on this page.
8. Download the Firmware file.
9. Click on the Firmware **.exe** file.

원문: Fluke FLUKE-729PRO 메뉴얼 · 제조사 원문 자료입니다. 사양은 제조사 사정에 따라 변경될 수 있습니다.

Calibration Data

The date of the last calibration and verification shows on the sticker on the calibration certificate and on the Instrument Information screen in the Setup menu. The CAL. STATUS number on the sticker should always match the Calibration Status number in the calibration screen. Only qualified personnel should calibrate the Product.

Service Center Calibration or Repair

Only qualified service personnel must do calibration, repairs, or service not included in this manual. If the Product fails, examine the battery pack first and replace it if necessary.

Make sure to operate the Product in accordance with the instructions in this manual. If the Product is faulty, send a description of the failure with the Product. Pressure modules do not need to accompany the Product unless the module is faulty also. Be sure to pack the Product securely, in the original shipping container if it is available. See *Contact Fluke* and the *LIMITED WARRANTY AND LIMITATION OF LIABILITY*.

Error Messages

The Product display shows error messages when the Product fails to meet certain conditions or there is a problem with the configuration of the Product or test. See Table 6 to troubleshoot these issue.

Table 6. Error Messages

Error Message	Explanation	Potential Root Cause and Solution
Too many errors	Too many errors, the error queue overflows	Clear the errors with the Product user interface.
Cannot read file	Failed to read file from file system.	1. File corrupted, delete the file and try again. 2. Data flash memory failure. The main PCA needs service.
Cannot recall procedure	Failed to recall downloaded procedure.	1. The downloaded procedure contains an illegal configuration. 2. File corrupted, download the procedure again.
Cannot store results	Failed to store task results	1. Not enough space, delete some files and run the task again. 2. Delete all results and run the task again.

원문: Fluke FLUKE-729PRO 메뉴얼 · 제조사 원문 자료입니다. 사양은 제조사 사정에 따라 변경될 수 있습니다.

Table 6. Error Messages (cont.)

Error Message	Explanation	Potential Root Cause and Solution
Filesystem fatal error	Failed to load filesystem from flash memory at start up.	Data flash memory failure. The main PCA needs service.
Cannot save screen	Failed to save screen into filesystem.	Not enough space, delete some files and try again.
Calibration error when (name of step)	Calibration failed at current step.	Make sure connection and reference are correct and try again.
HART command failed (command dependent explanation)	Error returned from HART device of previous command.	Device-dependent error. Refer to user manual of HART transmitter.
Lost connection to PCM	The link to the PCM is broken.	Cycle power, if error persists, the unit needs service.
Lost connection to EMM	The link to EMM is broken.	
PCM temperature too high	The temperature of PCM reaches its high limit.	In measure mode, let the PCM cool down and try the task again. Limit is 80 °C.
PCM pressure exceeds limit	The pressure of PCM exceeds its limit.	Vent pressure and do the task again.
Failed to initial DPC memory	Failed to initial memory lists for documenting.	1. Clear all files and try again. 2. Data flash memory failure. The main PCA needs service.
Invalid Instrument Setup, Default loaded	Checksum of instrument setup failed. All settings reset to their default values.	NA
Zero offset too large, please vent	Pressure is higher than limit for zeroing.	Vent pressure and zero the Product again.
Flash memory error	Failed to initial data flash memory.	Cycle power, if error persists, the main PCA needs service.

원문: Fluke FLUKE-729PRO 메뉴얼 · 제조사 원문 자료입니다. 사양은 제조사 사정에 따라 변경될 수 있습니다.

Table 6. Error Messages (cont.)

Error Message	Explanation	Potential Root Cause and Solution
Lost connection to external pressure module, Task aborted	Running task aborted, due to lost connection to external pressure module.	1. Make sure the external pressure module is connected, and run the task again. 2. Replace the external pressure module. If still undetected, the Product needs service.
Lost connection to HART transmitter, Task aborted	Running task aborted, due to lost connection to HART transmitter.	Make sure the transmitter is connected and powered. Try HART polling again. After connected, rerun the task.
Lost connection to RTD, Task aborted	Running task aborted because RTD was removed.	Make sure the RTD probe is connected and run the task again.
Open circuit detected	Open circuit detected while sourcing mA.	Connect the circuit properly and try again.
Invalid Task Setting	Task setting contains invalid items.	Verify zero/full-scale value defined in the task are in the range of the selected pressure source and try again.
Input Out Of Range	Invalid input signal when calibrating.	Make sure input signal is in the range of the current calibration point, and try again.
Invalid EMM/PCM CAL constant, Factory value loaded	Checksum failed for calibration constant, factory values are loaded.	The unit needs service for recalibration.
Invalid EMM/PCM CAL constant, Default value loaded	Checksum failed for factory calibration constant, default values are loaded.	The unit needs service for recalibration.

원문: Fluke FLUKE-729PRO 메뉴얼 · 제조사 원문 자료입니다. 사양은 제조사 사정에 따라 변경될 수 있습니다.

Table 6. Error Messages (cont.)

Error Message	Explanation	Potential Root Cause and Solution
Supply Pressure Too Low	Failed to create supply pressure for the current setpoint.	1. The pressure volume is too large, reduce the volume and try again. 2. The leakage of pressure volume is too large. Test the leakage and try again. 3. Ambient pressure is lower than the negative gauge setpoint. Change the negative gauge setpoint to a reasonable value at current ambient pressure. 4. The unit needs service.
Value out of range	Value input is out of range.	Try to configure a valid value.
Function not available	Selected function is not available for the current state.	NA
Illegal Operation	Illegal operation for the current state.	NA
PMM uninstalled	Pressure Measurement Module is not connected.	Make sure that the Pressure Measurement Module in installed.
PMM unsupported	Pressure Measurement Module is not supported.	1. Range of Pressure Measurement Module is greater than the range of the Product. 2. Replace with supported Pressure Measurement Module.

원문: Fluke FLUKE-729PRO 메뉴얼 · 제조사 원문 자료입니다. 사양은 제조사 사정에 따라 변경될 수 있습니다.

HART Commands

See Table 7 for Product HART commands.

Table 7. Supported HART Commands

Number	Command Description	Type
1	Read Primary Variable	Universal
2	Read Loop Current and Percent of Range	Universal
3	Read Dynamic Range and Loop Current	Universal
8	Read Dynamic Variable Classification	Universal
12	Read Message	Universal
13	Read Tag, Descriptor, Date	Universal
14	Read Primary Variable Transducer Information	Universal
15	Read Device Information	Universal
17	Write Message	Universal
18	Write Tag, Descriptor, Date	Universal
20	Read Long Tag	Universal
21	Read Unique Identifier	Universal
35	Write Primary Variable Range Value	Common Practice
40	Enter/Exit Fixed Current Mode	Common Practice
41	Perform Self Test	Common Practice
43	Set Primary Variable Zero	Common Practice
44	Write Primary Variable Units	Common Practice
45	Trim Loop Current Zero	Common Practice
46	Trim Loop Current Gain	Common Practice
48	Read Additional Device Status	Common Practice

Documenting Functionality

The Product uses calibration management software to communicate with documenting software. The Product documents As Found, As Left, and single-reading results. Download tasks by pre-defined tag numbers and save the results to Product memory. Review or delete these results when necessary.

원문: Fluke FLUKE-729PRO 메뉴얼 · 제조사 원문 자료입니다. 사양은 제조사 사정에 따라 변경될 수 있습니다.

Strap

Attach the Product carrying strap. See Figure 19. Adjust the straps as necessary to hang the Product on any sturdy support.

Figure 19. Product Strap

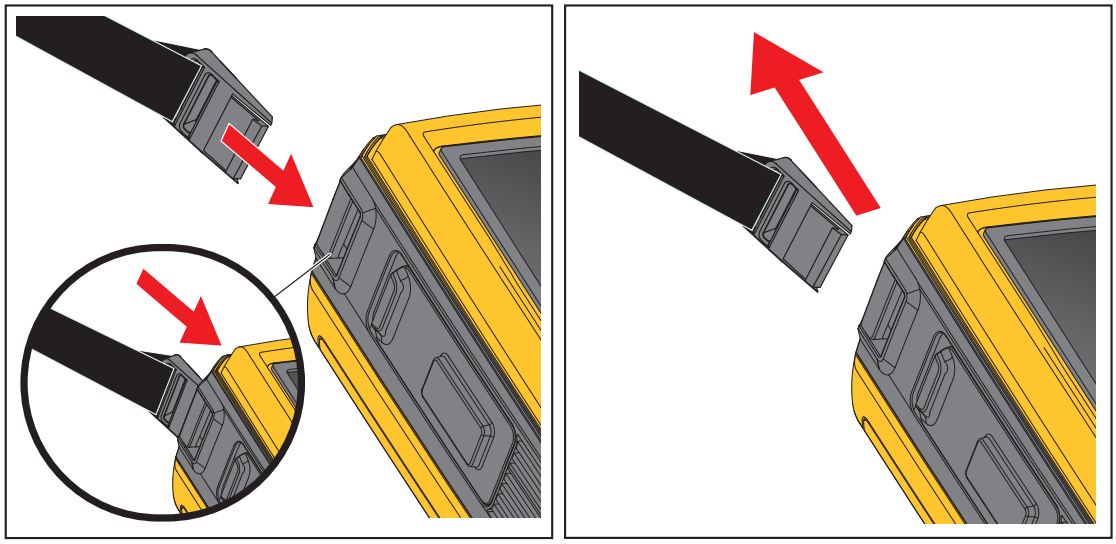

User-Replaceable Parts and Accessories

Table 8 is a list of replacement parts and accessories.

Table 8. User-Replaceable Parts and Accessories

Description	Quantity	Fluke P/N
BP729, Rechargeable Li-ion Battery	1	4817068
Power Charger, AC/DC	1	4878453
Mains Adapters International (Except For China)	1	2441372
Line Cord, Jumper (Except China)	1	4542113
Power Cable (China Only)	1	2716592
USB Cable Assembly	1	4499448
AC280, Suregrip Hook Clip Set	1	1610115
Alligator Clip Set	1	3765923
Cable Assembly, Stackable Test Leads Set	1	3669716
TP220, Test Probes, Red	1	3971276

원문: Fluke FLUKE-729PRO 메뉴얼 · 제조사 원문 자료입니다. 사양은 제조사 사정에 따라 변경될 수 있습니다.

Specifications

Pressure Specification

1-year Specification ..... 0.02 % of full scale

Control Specification..... 0.005 % full scale minimum

Temperature Compensation ..... 15 °C to 35 °C (59 °F to 95 °F) to rated accuracy
Note: For temperatures from -10 °C to +15 °C and 35 °C to 50 °C, 0.04 % of full scale

Electrical Specification

All specifications are valid to 110 % of range, except 24 mA source and simulate which are valid to 100 % of range.

Ranges

mA ..... 0 mA to 24 mA

Volts ..... 0 V dc to 30 V dc

Resolution

mA ..... 1 µA

Voltage ..... 1 mV

Accuracy..... 0.01 % ±2 LSD all ranges (at 23 °C ±5 °C)

Temperature Compensation ..... 20 ppm of full scale / °C from -10 °C to 18 °C and 28 °C to 50 °C

Loop Compliance Voltage..... 24 V dc @ 20 mA

mA Simulate External Voltage
Requirement..... 12 V dc to 30 V dc

Temperature Measurement Only/
100 Ω Pt (385) RTD..... -50 °C to +150 °C

Temperature Resolution ..... 0.01 °C

Temperature Accuracy .....±0.1 °C ±0.25 °C combined uncertainty when using 720 RTD probe (optional accessory)

Drive Capability

without HART resistor ..... 1200 Ω

with internal HART resistor ..... 950 Ω

원문: Fluke FLUKE-729PRO 메뉴얼 · 제조사 원문 자료입니다. 사양은 제조사 사정에 따라 변경될 수 있습니다.

729 Pro
Users Manual

Pressure Measurement Module Specification

Pressure Measurement Module	Range (psi) Resolution	Range (kPa) Resolution	Range (bar) Resolution	Specification (Total Uncertainty)[3]	
				15 °C to 35 °C	<15 °C, >35 °C
FLK-PMM-200K[1]	-15.0000 to 30.0000	-100.000 to 200.000	-1.00000 to 2.00000	Max 0.02 %FS/yr	Max 0.04 %FS/yr
FLK-PMM-200KA[2]	0 to 30.0000	0 to 200.000	0 to 2.00000	Max 0.05 %FS/yr	Max 0.07 %FS/yr
FLK-PMM-2000K[1]	-14.000 to 300.000	-95.00 to 2000.00	-0.9500 to 20.0000	Max 0.02 %FS/yr	Max 0.04 %FS/yr
FLK-PMM-4000K[1]	-14.00 to 600.00	-95.00 to 4000.00	-0.9500 to 40.0000	Max 0.02 %FS/yr	Max 0.04 %FS/yr
FLK-PMM-7000K[1]	-14.00 to 1000.00	-95.00 to 7000.00	-0.9500 to 70.0000	Max 0.02 %FS/yr	Max 0.04 %FS/yr
FLK-PMM-7000KA[2]	0 to 1000.00	0 to 7000.00	0 to 70.0000	Max 0.02 %FS/yr	Max 0.04 %FS/yr

[1] Gauge Reference
[2] Absolute Reference
[3] Dry air or non-corrosive gas only.

Mechanical Specification

Size (H x W x L) ..... 290 mm x 215 mm x 100 mm
Weight ..... 4.9 kg

Environmental Specification

Operating Temperature
- Measurement ..... -10 °C to 50 °C
- Pressure control ..... 0 °C to 50 °C
- Battery charging ..... 0 °C to 40 °C

Storage Temperature ..... -20 °C to 60 °C
Operating Altitude ..... <3000 m
Storage Altitude ..... <13 000 m
Operating Humidity ..... Non condensing (<10 °C)
≤90 % RH (at 10 °C to 30 °C)
≤75 % RH (at 30 °C to 40 °C)
≤45 % RH (at 40 °C to 50 °C)

Safety

General ..... IEC 61010-1, Pollution Degree 2
Lithium Battery ..... IEC 62133, UN 38.3; 14.4 V, 6.7Ah, 97Wh, 4ICR19/66-2 (4s2p)
Charge input 19.5 V, 1.6 A.

원문: Fluke FLUKE-729PRO 메뉴얼 · 제조사 원문 자료입니다. 사양은 제조사 사정에 따라 변경될 수 있습니다.

Electromagnetic Compatibility (EMC)

International..... IEC 61326-1: Basic Electromagnetic Environment;
CISPR 11: Group 1, Class A

Group 1: Equipment has intentionally generated and/or uses conductively coupled radio frequency energy that is necessary for the internal function of the equipment itself.

Class A: Equipment is suitable for use in all establishments other than domestic and those directly connected to a low-voltage power supply network that supplies buildings used for domestic purposes. There may be potential difficulties in ensuring electromagnetic compatibility in other environments due to conducted and radiated disturbances.

Caution: This equipment is not intended for use in residential environments and may not provide adequate protection to radio reception in such environments.

Korea (KCC)..... Class A Equipment (Industrial Broadcasting & Communication Equipment)

Class A: Equipment meets requirements for industrial electromagnetic wave equipment and the seller or user should take notice of it. This equipment is intended for use in business environments and not to be used in homes.

원문: Fluke FLUKE-729PRO 메뉴얼 · 제조사 원문 자료입니다. 사양은 제조사 사정에 따라 변경될 수 있습니다.

729 Pro
Users Manual

52

원문: Fluke FLUKE-729PRO 메뉴얼 · 제조사 원문 자료입니다. 사양은 제조사 사정에 따라 변경될 수 있습니다.