FEV500

Fast DC EV Charging Station Analyzer

User Manual

November 2025 (English)
© 2025 Fluke Corporation.
All rights reserved. Specifications are subject to change without notice. All product names are trademarks of their respective companies.

원문: Fluke FEV500 사용설명서 · 제조사 원문 자료입니다. 사양은 제조사 사정에 따라 변경될 수 있습니다.

Limited Warranty and Limitation of Liability

Each Fluke product is warranted to be free from defects in material and workmanship under normal use and service. The warranty period is 2 years and begins on the date of shipment. Parts, product repairs, and services are warranted for 90 days. This warranty extends only to the original buyer or end-user customer of a Fluke authorized reseller, and does not apply to fuses, disposable batteries, or to any product which, in Fluke's opinion, has been misused, altered, neglected, contaminated, or damaged by accident or abnormal conditions of operation or handling. Fluke warrants that software will operate substantially in accordance with its functional specifications for 90 days and that it has been properly recorded on non-defective media. Fluke does not warrant that software will be error free or operate without interruption.

Fluke authorized resellers shall extend this warranty on new and unused products to end-user customers only but have no authority to extend a greater or different warranty on behalf of Fluke. Warranty support is available only if product is purchased through a Fluke authorized sales outlet or Buyer has paid the applicable international price. Fluke reserves the right to invoice Buyer for importation costs of repair/ replacement parts when product purchased in one country is submitted for repair in another country.

Fluke's warranty obligation is limited, at Fluke's option, to refund of the purchase price, free of charge repair, or replacement of a defective product which is returned to a Fluke authorized service center within the warranty period.

To obtain warranty service, contact your nearest Fluke authorized service center to obtain return authorization information, then send the product to that service center, with a description of the difficulty, postage and insurance prepaid (FOB Destination). Fluke assumes no risk for damage in transit. Following warranty repair, the product will be returned to Buyer, transportation prepaid (FOB Destination). If Fluke determines that failure was caused by neglect, misuse, contamination, alteration, accident, or abnormal condition of operation or handling, including overvoltage failures caused by use outside the product’s specified rating, or normal wear and tear of mechanical components, Fluke will provide an estimate of repair costs and obtain authorization before commencing the work. Following repair, the product will be returned to the Buyer transportation prepaid and the Buyer will be billed for the repair and return transportation charges (FOB Shipping Point).

THIS WARRANTY IS BUYER'S SOLE AND EXCLUSIVE REMEDY AND IS IN LIEU OF ALL OTHER WARRANTIES, EXPRESS OR IMPLIED, INCLUDING BUT NOT LIMITED TO ANY IMPLIED WARRANTY OF MERCHANTABILITY OR FITNESS FOR A PARTICULAR PURPOSE. FLUKE SHALL NOT BE LIABLE FOR ANY SPECIAL, INDIRECT, INCIDENTAL OR CONSEQUENTIAL DAMAGES OR LOSSES, INCLUDING LOSS OF DATA, ARISING FROM ANY CAUSE OR THEORY.

Since some countries or states do not allow limitation of the term of an implied warranty, or exclusion or limitation of incidental or consequential damages, the limitations and exclusions of this warranty may not apply to every buyer. If any provision of this Warranty is held invalid or unenforceable by a court or other decision-maker of competent jurisdiction, such holding will not affect the validity or enforceability of any other provision. 11/99

원문: Fluke FEV500 사용설명서 · 제조사 원문 자료입니다. 사양은 제조사 사정에 따라 변경될 수 있습니다.

Table of Contents

Introduction iv
Contact Fluke 5
Safety Information 5
The Product 6
- Scope of Delivery 7
- Product Accessories 7
- Home Screen 8
- Button Controls 9
- Battery 10
  - Battery Removal 10
- Project Setup 12

Test Preparations 13
- Authentication 13
- Plug Connection 13

Test Steps 14
- SLAC Test 14
- Continuity (R_{LO}) Test 15
  - Zero the Test Leads 15
  - Performing Continuity Test 16
- Insulation Resistance 17
- Load Test 17
- IMD Test 17
- Residual Voltage Test 18

Test Results 18
Shutdowns 19
Settings 20
Time Synchronization 21
Maintenance 22
- Cleaning 22
- Firmware Update 22
- Service Data 23
- Disposal 23

원문: Fluke FEV500 사용설명서 · 제조사 원문 자료입니다. 사양은 제조사 사정에 따라 변경될 수 있습니다.

Introduction

The Fluke FEV500 Fast DC Charging Station Analyzer (the Product or Analyzer) is a portable test instrument to test fast DC electric vehicle (EV) charging stations (the Station also known as Electrical Vehicle Supply Equipment EVSE). The Product verifies the safety and functionality of the charging station with a CCS connector (Combo 1 or CCS1 / Combo 2 or CCS2) through a preset test sequence and presents test results with pass/fail indications. The Product tests fast DC electric vehicle charging stations in accordance with industry standards IEC 61851-23, SAE J1772, and the digital communication protocols ISO 15118 and DIN SPEC 70121.

The Product shows images on a high-visibility, industrial-quality LCD screen. The Product saves data to the internal memory. Use TruTest™ desktop software to transfer the saved results from the Product to the TruTest software. To download TruTest software, go to: https://www.fluke.com/en-us/support/software-downloads/trutest-software-downloads. This User Manual shows English screens in examples and images of the FEV500 model.

원문: Fluke FEV500 사용설명서 · 제조사 원문 자료입니다. 사양은 제조사 사정에 따라 변경될 수 있습니다.

Contact Fluke

Fluke Corporation operates worldwide. For local contact information, go to our website: www.fluke.com
To register your product, or to view, print, or download the latest manual or manual supplement, go to our website.

Fluke Corporation
6920 Seaway Blvd.
Everett, WA 98203
U.S.A.

Fluke Europe B.V.
P.O. Box 1186
5602 BD Eindhoven
The Netherlands

+1-425-446-5500 fluke-info@fluke.com

Safety Information

General Safety Information is in the printed Safety Information document that ships with the Product and at www.fluke.com. More specific safety information is listed where applicable.

A **Warning** identifies hazardous conditions and procedures that are dangerous to the user. A **Caution** identifies conditions and procedures that can cause damage to the Product or the equipment under test.

Complete specifications are at www.fluke.com.

원문: Fluke FEV500 사용설명서 · 제조사 원문 자료입니다. 사양은 제조사 사정에 따라 변경될 수 있습니다.

The Product

Table 1 shows features of the Product.

Table 1. Product

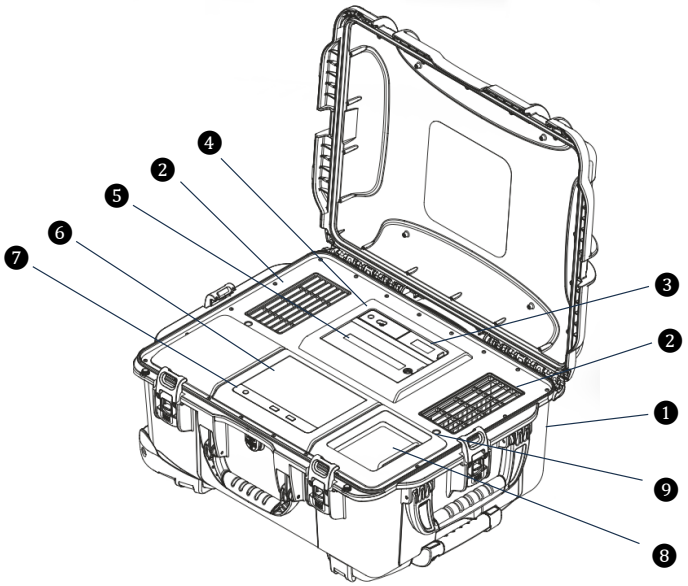

Item	Description	Function
❶	FEV500	The Product in carrying case.
❷	Air vent	Air inlet and outlet vents of the cooling system. The lid must not close while the internal fans are operating.
❸	USB-C	USB-C socket in a compartment protected by a cover. USB-C port supports: • charging the internal battery • a connection to a PC for data communication with TruTest software • flash drives for firmware updates The Product supports USB-C flash drives formatted with the FAT32 or exFAT file system.
❹	Lead socket	Socket for the remote-control probe
❺	Battery	Battery compartment
❻	Display	Touch display for user interaction, see Home Screen
❼	Buttons	Buttons controls to trigger selected actions, see Button Controls
❽	CCS socket	CCS socket protected by a sliding cover. Supports the standards CCS1 or CCS2 depending on the Product model.
❾	Emergency unlock	Mechanical release of the plug in an emergency, see Shutdowns

원문: Fluke FEV500 사용설명서 · 제조사 원문 자료입니다. 사양은 제조사 사정에 따라 변경될 수 있습니다.

Scope of Delivery

Table 2 is a list of items included with the Product.

Table 2. Scope of Delivery

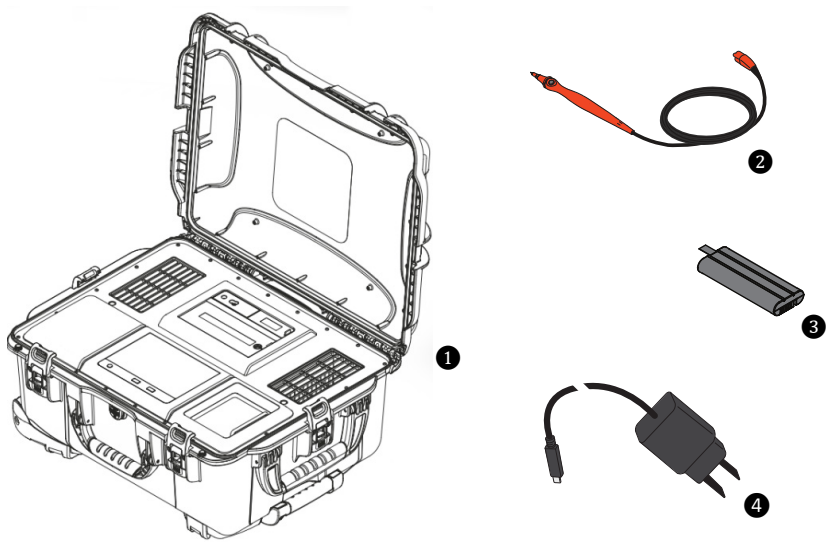

Item	Model Number	Description	Part Number
1	FEV500	Product supporting CCS1 or CCS2 standard	6008392 (CCS1) 6008411 (CCS2)
2	TP165x	Remote Control Probe	4013777
3	Battery	Li-ion Battery (installed at delivery)	–
4	USB-C charger	USB-C power adapter 65 W, mains adapter set, 1.5 m (4.9 ft) USB-C cable	6013614

Product Accessories

For the most up-to-date information on accessories, go to www.fluke.com.

Home Screen

Table 3 shows the home screen as an example with the important operating elements. Depending on previously saved projects, the actual content may differ. This manual shows English screens in examples and translates the explanations where appropriate.

Table 3. Home Screen

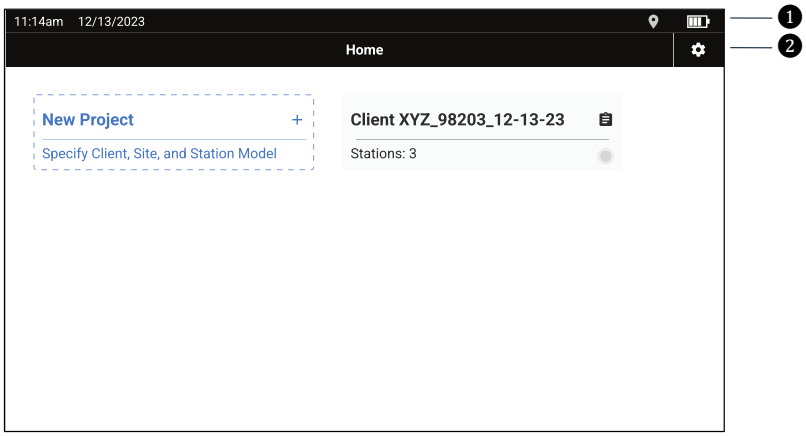

Item	Description	Symbol	Function
1	Status bar		Lists symbols to indicate the Product status.
			Indicates the reception of a GPS signal. If GPS is available, the device time is synchronized.
			The symbol indicates a closed electrical lock. Do not disconnect the plug from the Product. If no symbol is displayed, the electrical lock is open. You may disconnect the plug from the Product.
			Status of battery power.
			Battery overheating.
			Battery charging.
2	Settings		Sets user preferences and views information about the Product, see Settings.

원문: Fluke FEV500 사용설명서 · 제조사 원문 자료입니다. 사양은 제조사 사정에 따라 변경될 수 있습니다.

Button Controls

The button control allows the user to trigger selected actions. Table 4 lists the functions of the available button controls.

Table 4. Button Controls

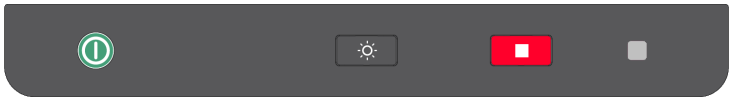

Item	Description	Function
	Power button with color ring	Turns the Product on and off. To protect the battery, switching on is stopped if the temperature exceeds 60 °C (140 °F). Random pressing the power button while a running EVSE test may lead to unusable results. If the system does not respond to pressing the power button, a hard reset can be performed by pressing the power button for 15 s.
		Product is on, color ring depends on Battery, internal fans can operate.
		Flashing yellow: Product is off but internal fans are still operating. Do not close the lid.
		Blue: Product is off and charging battery. It is safe to close the lid after removing the USB-C charger.
		Off: Product is off. Charging battery completed or suspended. Internal fans are off. It is safe to close the lid.
		Flashing red once for 1 s when the power button is pressed: No battery detected. The Product remains off.
	Backlight button	Controls the brightness of the display using the predefined brightness levels: Auto – Low – Medium – High.
	Stop button	Ends a running EVSE test and releases the plug. It is used to end a test prematurely if the results appear unreasonable or an immediate stop of the test is needed.
	Ambient light sensor	Controls the display brightness automatically with an ambient light sensor.

원문: Fluke FEV500 사용설명서 · 제조사 원문 자료입니다. 사양은 제조사 사정에 따라 변경될 수 있습니다.

Battery

The built-in battery can be charged with a USB-C charger. Use only USB-C chargers with Power Delivery (PD) support and an output power of at least 27 W (9 V / 3 A). Fluke recommends 65 W (20 V / 3.25 A). The battery can also be removed from the Product, see Battery Removal, and charged using an external battery charger (optional Fluke accessory ESBC290).

⚠ Caution

To prevent overheating of the battery during charging, do not exceed the allowable ambient temperature. The battery charging is suspended when the battery temperature exceeds 45 °C (113 °F). See Product Specifications at www.fluke.com.

Note

No damage will occur if the charger is connected for long periods, for example, during the weekend. The Product automatically switches off the charging.

Note

New batteries may require an initial charge.

Table 5 lists the display symbols to describe the charge level of the battery.

Table 5. Battery Symbols

Battery	Discharging		Charging		
Description	**Symbol**	**Power ON**	**Symbol**	**Power ON**	**Power OFF**
Charge level ≤100 %					
Charge level <75 %					
Charge level <50 %					
Charge level <25 %					
Charge level <10 %					
Charge level <5 %					
Charge level <2 %	Aborting measurement Product shutdown				
No battery	No symbol		No symbol		
No charging due to high temperature					

Battery Removal

Note

An EVSE test cannot be carried out with the battery removed.

원문: Fluke FEV500 사용설명서 · 제조사 원문 자료입니다. 사양은 제조사 사정에 따라 변경될 수 있습니다.

Figure 1 shows the battery removal from the Product. Before the removal, the battery compartment cover must be removed by loosening the locking screw using a coin or a suitable screwdriver.

Figure 1. Battery Removal

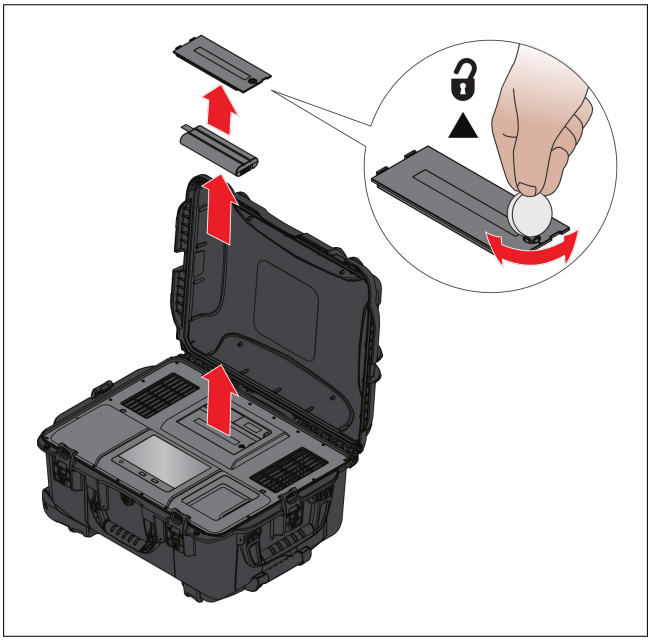

Note
The internal battery provides the power for the real-time clock. If the battery is removed, the date and time settings will be lost.

원문: Fluke FEV500 사용설명서 · 제조사 원문 자료입니다. 사양은 제조사 사정에 따라 변경될 수 있습니다.

Project Setup

Table 6 shows the basic structure of a project setup.

Table 6. Project Setup

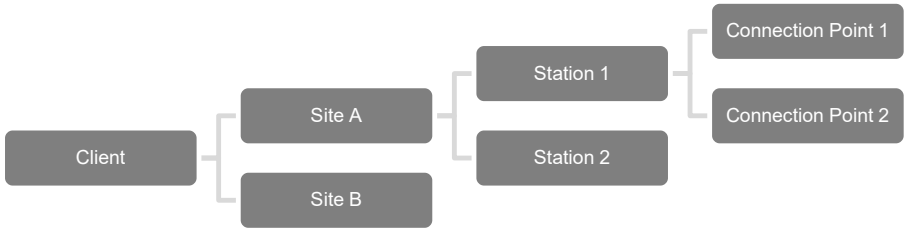

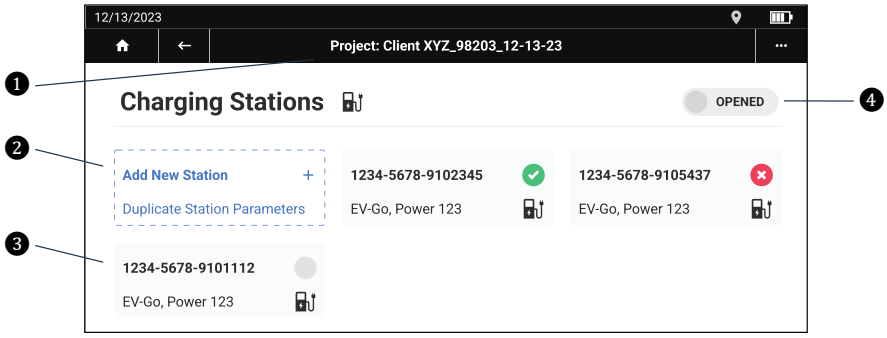

Item	Description	Symbol	Function
❶	Project		Project name defined by the client and the site
❷	Station, new		Adding a new station
❸	Station, existing		List of existing stations by unique station ID. Select the station to view manufacturer, station model, and commissioning date.
			A station can have several connection points. A connection point is described by its type (e.g. CCS) and a unique connection point ID.
❹	Status		Toggles the status of a project
		OPENED	The project is "Opened" until the user marks it as closed.
		CLOSED	The user can mark a project as closed, no new test run possible.

원문: Fluke FEV500 사용설명서 · 제조사 원문 자료입니다. 사양은 제조사 사정에 따라 변경될 수 있습니다.

Test Preparations

Note
Tests are only carried out if the battery is charged to at least 20 %.

Authentication

Some of the tests require authentication of the user to access the charging station. The Fluke FEV500 supports external authentication "EIM" (External Identification Means) according to ISO 15118, which typically requires an RFID card, a smartphone app, or a credit card. It may be necessary to carry out multiple authentications for a complete test run, dependent on station requirements.

Plug Connection

Figure 2 shows how to connect the plug to the Product. The charging socket is protected from environmental influences by a cover. Slide the cover to the center to access the charging socket. The Product automatically detects the insertion of a plug.

Figure 2. Plug Connection

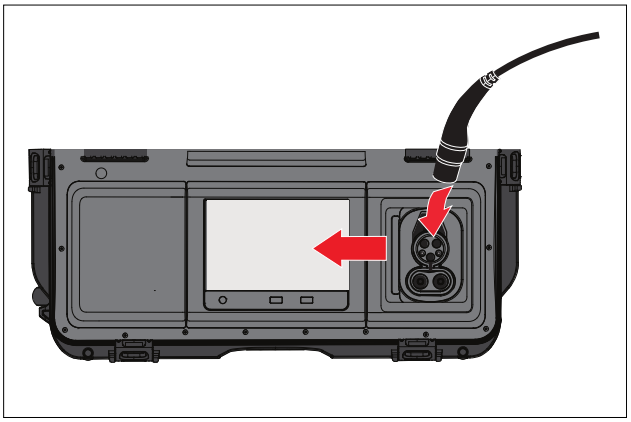

원문: Fluke FEV500 사용설명서 · 제조사 원문 자료입니다. 사양은 제조사 사정에 따라 변경될 수 있습니다.

Test Steps

Figure 3 shows the basic sequence of the test steps after project setup. The Product user interface guides you step-by-step through the testing procedures.

Figure 3. Project Setup

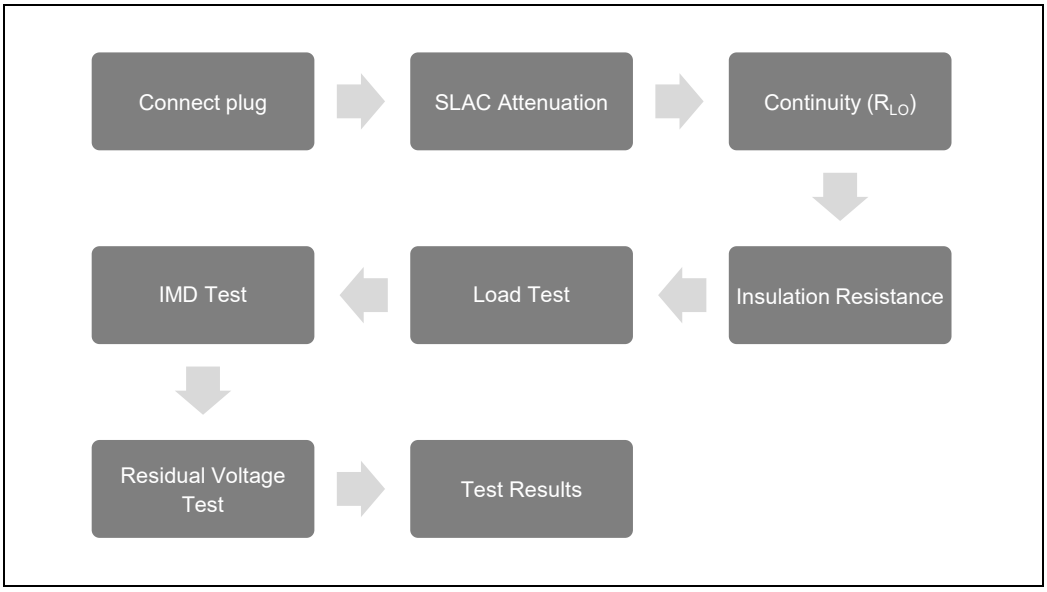

SLAC Test

The Combined Charging System (CCS) communication protocol is based on ISO 15118 and DIN SPEC 70121 standards. It utilizes Power Line Communication (PLC) over the Control Pilot (CP) line to establish a digital link between the electric vehicle (EV) and the charging station (EVSE).

PLC operates at frequencies in the range of 2 MHz to 30 MHz, which makes it susceptible to attenuation, and crosstalk, especially in environments with multiple nearby connection points or charging stations. These interferences can degrade communication quality or cause misidentification of the connected EVSE.

To mitigate this, the Product performs a Signal Level Attenuation Characterization (SLAC) test. SLAC measures the strength of the PLC signal to identify the correct EVSE for communication.

SLAC helps isolate the EVSE with the strongest signal, which is assumed to be the one physically connected to the Product. For successful communication, SLAC must be in the range between 0 dB and 10 dB. The Product accepts signal strength between 0 dB and 20 dB. Once the SLAC is determined, the voltage and current ratings and ID of the EVSE are retrieved. If the EVSE does not provide the unique EVSE-ID over the digital protocol, the user can enter an ID manually.

원문: Fluke FEV500 사용설명서 · 제조사 원문 자료입니다. 사양은 제조사 사정에 따라 변경될 수 있습니다.

Continuity (R_{LO}) Test

The protective conductors (PE) must have a low resistance (low impedance) to provide a safe and easy path for electrical leakage and fault currents so that current monitors can interrupt the supply voltage. This is important to reduce the risk of injury from electric shock and interrupting the flow of energy that can ultimately lead to fires.

The protective earth resistance must have a sufficiently low value to prevent the voltage on external metal parts from rising to a level where the shock potential poses a danger to life.

The protective earth resistance value R_{LO} is determined during each test by applying a high current source (10 A for CCS) between the PE conductors of the charging station and all accessible conductive parts. The limit for the resistance value R_{LO} is predefined according to the standard, see Product Data Sheet for reference to standards. The resistance value of the charging cable is already considered here.

Zero the Test Leads

Test leads have a small amount of inherent resistance that can affect a measurement. Before taking the continuity measurements, compensate for, or zero, the test lead. The Product measures the test lead resistance, stores the value, and subtracts it from readings. The resistance value is not retained when the power is turned off. Fluke recommends that a zeroing is carried out for each new continuity test cycle.

To zero:

1. Remove the front sleeve from the probe tip of the test lead.
2. Insert the 3-pin plug end of the test lead into the IT/RLO socket, see Figure 4.
3. Insert the probe tip into the SENSE ZERO ADJ socket.
4. Press the Zero button on the Continuity measurement screen. The zeroing can also be skipped by pressing the Skip button.
5. After the Zero Offset has been measured choose to Cancel or Accept Offset. Once the Zero Offset has been accepted this is the Offset for the remainder of the EVSE inspection.

Figure 4. Zeroing the Test Leads

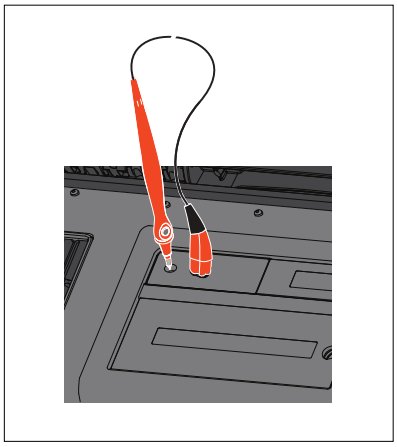

원문: Fluke FEV500 사용설명서 · 제조사 원문 자료입니다. 사양은 제조사 사정에 따라 변경될 수 있습니다.

Performing Continuity Test

For each accessible conductive part, an individual Continuity (R_{LO}) Test is required, see Figure 5. Information on the parts to be tested can be found in the documentation for the charging station. Accessible conductive parts are for example equipotential bonding rails or metal parts of the housing, such as screws, sheet metal, and cable glands.

Figure 5. Performing Continuity Test

To perform Continuity Test:

1. Remove the probe tip from the SENSE ZERO ADJ socket and place probe tip on the EVSE test point you wish to measure.
2. Press the button on the remote probe for 7 s to measure and save the Continuity measurement.
3. Repeat the measurement for each test point. Modify the name of test point by selecting the **...** on the Continuity page of the Product.

원문: Fluke FEV500 사용설명서 · 제조사 원문 자료입니다. 사양은 제조사 사정에 따라 변경될 수 있습니다.

Insulation Resistance

Insulation Resistance measurement determines the resistance R_{ISO} between DC+ to PE and DC- to PE by applying a high voltage source. This measurement is used to detect potential insulation faults that could cause intermittent interruptions in the charging of electric vehicles.

IEC 62196-1 clause 21 requires an insulation resistance of ≥5 MΩ. The insulation resistance measurement is also influenced by the internal resistance of the station's internal IMD (insulation monitoring device), which is connected in parallel to the measurement and results in reduced measurement resistances. Therefore, the pass/fail criteria in the Product for the insulation resistance measurement is reduced to 500 kΩ.

Note

Insulation Resistance measurement may cause shutdown of EVSE depending on EVSE specifications.

Load Test

The Load Test is performed by the Product during an energy transfer phase of the charging station. The applied voltages by the charging station between DC+ and PE and DC- and PE must remain within a certain range for the duration of the test. If the check fails, an error shutdown is performed, and all tests are aborted.

⚠ Caution

The heat generated during the load test is dissipated to the outside by the internal fans. To do this, the cover of the Product must not be closed. The next test can only be carried out after sufficient cooling time.

IMD Test

A charging station maintains electrical safety by permanently monitoring the insulation resistance between each DC line to the protective conductor with an IMD (insulation monitoring device). In the event of an error, the IMD of the charging station will deliver the insulation error information and switch off the DC outputs.

The IMD test of the Product verifies that the IMD of the charging station correctly performs an error shutdown. See Product Data Sheet for reference to standards.

The IMD test consists of two parts: a "No Trip" test using a high-resistance test resistor between a DC line and PE that should not trigger the IMD, and a "Trip" test using a lower-resistance test resistor designed to reliably trigger the IMD.

Note

Not all EVSE's contain an IMD. If EVSE does not contain an IMD, "No Trip" is displayed as passed and the "Trip Test" fails with a warning message.

원문: Fluke FEV500 사용설명서 · 제조사 원문 자료입니다. 사양은 제조사 사정에 따라 변경될 수 있습니다.

Residual Voltage Test

For safety reasons, the charging plug is released after the charging process, when the residual voltage between the DC+ and DC- lines fall below a value of 60 V dc. Voltage should drop below 60 V within 1 s. See Product Data Sheet for reference to standards. The Residual Voltage test is measured in combination with the IMD test but will be displayed on a separate screen.

Test Results

Table 7 shows an overview of the test results.

Table 7. Test Results

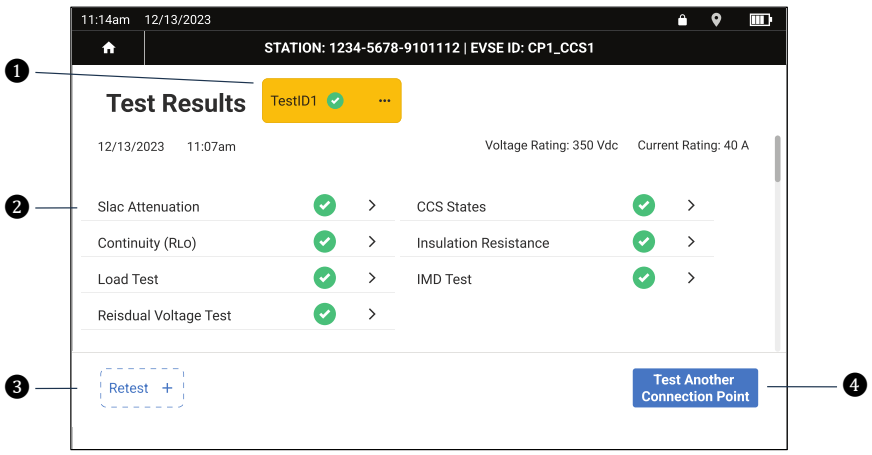

Item	Description	Function
1	Individual test ID name	View repeated test results for the selected connection point
2	Test Results	Overview of the tests performed and their results Select a measurement to view its details; scroll to access additional results.
3	Retest +	Retests the selected connection point
4	Test another connection point	Starts the test procedures for another connection point

원문: Fluke FEV500 사용설명서 · 제조사 원문 자료입니다. 사양은 제조사 사정에 따라 변경될 수 있습니다.

Shutdowns

In the event of a malfunction or power loss, it may be necessary to manually disconnect the plug from the Product. The options for releasing the connector are:

- Using Stop button
- Using manual release mechanism, see Figure 6

Figure 6. Manual Release Mechanism

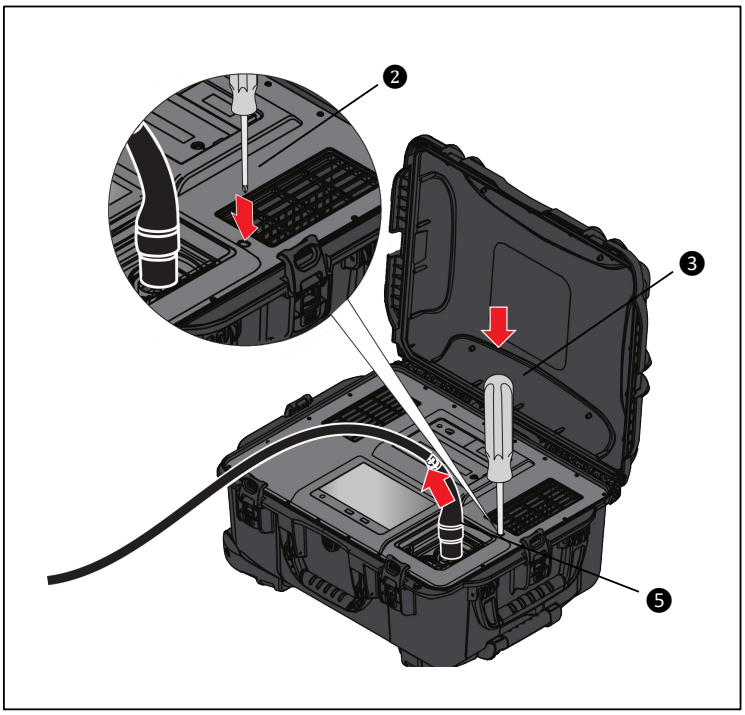

To disconnect the plug from the Product by hand, you need to use a tool such as a flathead screwdriver with a length of approximately 70 mm (2.8 in) and a diameter of less than 8 mm (0.31 in).

Follow these steps:

1. Remove the cover from the threaded hole located between the vent and the connector.
2. Insert the tool into the hole.
3. Apply gentle pressure to the tool to release the locking mechanism.
4. Remove the tool.
5. Disconnect the CCS plug.
6. Reattach the cover by pressing it into the hole until it securely locks into the thread.

원문: Fluke FEV500 사용설명서 · 제조사 원문 자료입니다. 사양은 제조사 사정에 따라 변경될 수 있습니다.

Settings

Table 8 is a list of the options available in the setting menu. When the Product is turned off and back on, the Product uses the last settings saved.

Table 8. Setting Menu (Exemplary Screen)

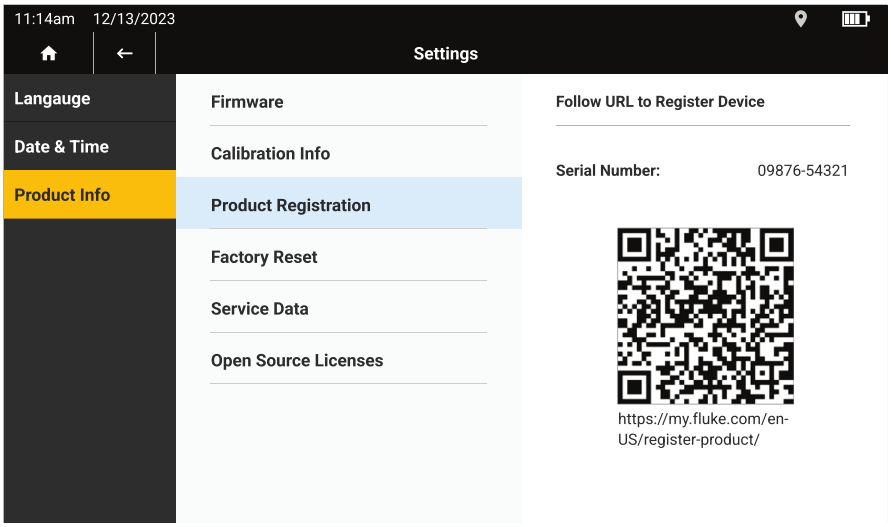

Option	Description
Language	Selects a language to be used for the user interface.
Date & Time	Selects the preferred time zone, date format, and time format.
Product Info	Shows Product information.
Firmware	• Enables the installation of new firmware from a USB-C flash drive, see Firmware Update.
Calibration Info	• Displays information to the calibration.
Product Registration	• Offers a link to the Product registration.
Factory Reset	• Enables the device to be reset to factory defaults.
Service Data	• Allows to save service data on a USB-C flash drive.
Open Source Licenses	• Provides information on open-source licenses.

원문: Fluke FEV500 사용설명서 · 제조사 원문 자료입니다. 사양은 제조사 사정에 따라 변경될 수 있습니다.

Time Synchronization

For accurate time synchronization, the Product uses satellite signals received via its integrated GPS module. Due to the extremely low signal strength of GPS satellites, it is recommended to operate the Product in an outdoor location with a clear view of the sky to ensure reliable reception.

Upon startup, the GPS receiver begins acquiring satellite signals. This process typically takes approximately 1 min, depending on satellite visibility. Once a sufficient number of satellites are identified, the receiver synchronizes the system time.

The GPS icon in the status bar turns green when the receiver provides a stable and reliable time signal.

원문: Fluke FEV500 사용설명서 · 제조사 원문 자료입니다. 사양은 제조사 사정에 따라 변경될 수 있습니다.

Maintenance

Periodically wipe the case with a damp cloth and mild detergent. Do not use abrasives or solvents. Dirt or moisture in the terminals can affect readings.

⚠⚠ Warning

To prevent possible electrical shock, fire, or personal injury:

- **Do not open the case. You cannot repair or replace parts in the case.**
- **Remove the input signals before you clean the Product.**
- **Have an approved technician repair the Product.**

Cleaning

Clean the case and display with a soft cloth dampened with water and a mild soap solution. Do not use solvents, isopropyl alcohol, or abrasive cleansers. To clean the ports, use a pressurized can of air or a dry nitrogen-ion gun, if available, to blow the particulates from the ports.

Firmware Update

To update the firmware, place the firmware file in the folder FEV500 on your USB-C flash drive. Insert the flash drive into the Product, see Figure 7. Next, navigate to the Settings menu, choose Product Info, select Firmware, and press Scan for Available Firmware. The Product uses the most recent firmware version available on the USB-C flash drive, which may be newer, the same, or older than the currently installed version. The Product may restart several times during the firmware update.

For the latest firmware update, see https://www.fluke.com/en-gb/support/software-downloads

Figure 7. Plug the USB-C Stick into the Socket

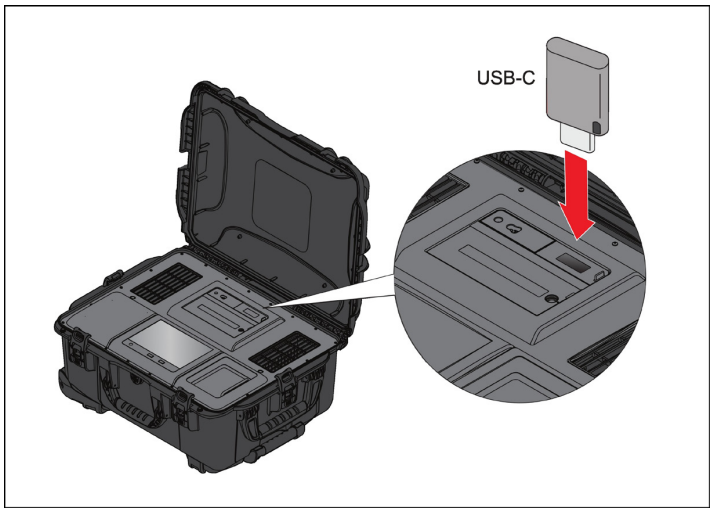

원문: Fluke FEV500 사용설명서 · 제조사 원문 자료입니다. 사양은 제조사 사정에 따라 변경될 수 있습니다.

Service Data

For problems with the Product that our support team cannot resolve, we might ask you to copy the service data. This can be accessed in the Settings menu. This requires a removable USB flash drive with at least 2 GB of free memory. The data will take several minutes to copy. Our support team will provide specific instructions on what to do with this data so our engineers can evaluate the data and get to the root of the problem.

Disposal

Dispose of the Product in a professional and environmentally sound manner:

- Delete personal data on the Product before disposal.
- Remove batteries that are not integrated into the electrical system before disposal and dispose of batteries separately.

원문: Fluke FEV500 사용설명서 · 제조사 원문 자료입니다. 사양은 제조사 사정에 따라 변경될 수 있습니다.