ThermoView® TV30 Series

Thermal Imager Camera

Users Manual

5340877, English, Rev. 1.0, May 2023
© 2023 Fluke Process Instruments. All rights reserved. Printed in Germany. Specifications subject to change without notice.
All product names are trademarks of their respective companies.

원문: Fluke Process Instruments TV30 매뉴얼 · 제조사 원문 자료입니다. 사양은 제조사 사정에 따라 변경될 수 있습니다.

Warranty

The manufacturer warrants this instrument to be free from defects in material and workmanship under normal use and service for the period of two years from date of purchase. This warranty extends only to the original purchaser. This warranty shall not apply to fuses, batteries or any product which has been subject to misuse, neglect, accident, or abnormal conditions of operation.

In the event of failure of a product covered by this warranty, the manufacturer will repair the instrument when it is returned by the purchaser, freight prepaid, to an authorized Service Facility within the applicable warranty period, provided manufacturer's examination discloses to its satisfaction that the product was defective. The manufacturer may, at its option, replace the product in lieu of repair. With regard to any covered product returned within the applicable warranty period, repairs or replacement will be made without charge and with return freight paid by the manufacturer, unless the failure was caused by misuse, neglect, accident, or abnormal conditions of operation or storage, in which case repairs will be billed at a reasonable cost. In such a case, an estimate will be submitted before work is started, if requested.

The foregoing warranty is in lieu of all other warranties, expressed or implied, including but not limited to any implied warranty of merchantability, fitness, or adequacy for any particular purpose or use. The manufacturer shall not be liable for any special, incidental or consequential damages, whether in contract, tort, or otherwise.

Disclaimer for Export Control Classification

These products are controlled under ECCN 6A003 and an export license is needed for certain destinations. Please see RS1 controls for licensing requirements.

This manual is available in different languages. In case of differences between the language versions, the English manual is binding.

원문: Fluke Process Instruments TV30 매뉴얼 · 제조사 원문 자료입니다. 사양은 제조사 사정에 따라 변경될 수 있습니다.

Table of Contents

Chapter **Page**

WARRANTY **2**

TABLE OF CONTENTS **3**

LIST OF TABLES **6**

LIST OF FIGURES **7**

COMPLIANCE STATEMENT **9**

SAFETY INFORMATION **10**

CONTACTS **13**

1 DESCRIPTION **14**

1.1 Available Models 16
1.2 System Architecture 17

2 TECHNICAL DATA **18**

2.1 Measurement Specification 18
2.2 Optical Specifications 19
2.2.1 Standard Lens 19
2.2.2 Wide Angle Lens 20
2.2.3 Tele Lens 20
2.3 Electrical Specifications 21
2.4 Communications 22
2.5 Environmental Specifications 22
2.6 Dimensions 23
2.7 Scope of Delivery 23

3 BASICS **24**

3.1 Measurement of Infrared Temperature 24
3.2 Emissivity of Target Object 24

4 ENVIRONMENT **25**

4.1 Ambient Temperature 25
4.2 Atmospheric Quality 25
4.3 Protection 25
4.4 Electrical Interference 25

5 INSTALLATION **26**

5.1 Positioning 26
5.2 Distance to Object 26
5.3 Focusing 26
5.4 Mounting 26

원문: Fluke Process Instruments TV30 매뉴얼 · 제조사 원문 자료입니다. 사양은 제조사 사정에 따라 변경될 수 있습니다.

5.5 Powering 27
5.5.1 Power over External Supply 27
5.5.2 Power over Ethernet 28
5.6 Networking 28
5.6.1 Ethernet Connector 28
5.7 Connecting 29
5.7.1 12-Pin Connector 29
5.7.2 Digital Inputs 30
5.7.3 Digital Outputs 30
6 Operation 32
6.1 Getting Started 32
6.2 LED Status Indicator 32
6.3 Shutter 33
7 Web Server 34
7.1 Home Page 34
7.2 Camera Pages 35
7.2.1 <Camera> <Values> 35
7.2.2 <Camera> <Conditions> 38
7.2.3 <Camera> <Configuration> 41
7.3 Settings Pages 43
7.3.1 <Settings> <User Management> 43
7.3.2 <Settings> <Networking> 44
7.3.2.1 Obtain IP Address via DHCP / Auto IP 45
7.3.2.2 Use a Static IP Address 45
7.3.2.3 HTTPS Security Certificate 45
7.3.3 <Settings> <Localization> 46
7.3.4 <Settings> <Device Management> 47
7.4 I/O Pages 48
7.4.1 <I/O> <Internal> 48
7.4.2 <I/O> <External> 49
7.4.3 <I/O> <MQTT> 51
7.4.4 <I/O> <OPC UA> 53
8 Accessories 56
8.1 Electrical Accessories 56
8.1.1 Ethernet PoE Cable (A-CB-xx-M12-W08-xx) 57
8.1.2 12-Wire Cable, High Temp (A-CB-HT-M16-W12-xx) 58
8.1.3 12-Wire Cable, Low Temp (A-CB-LT-M16-W12-xx) 60
8.1.4 Terminal Block (A-TV30-TB) 62
8.1.5 Ethernet Cable (A-CB-LT-RJ45-xx) 63
8.1.6 Fiber Optic Cable (A-CB-FO-xxx) 64
8.1.7 PoE Injector (A-TV-POE1) 65

원문: Fluke Process Instruments TV30 매뉴얼 · 제조사 원문 자료입니다. 사양은 제조사 사정에 따라 변경될 수 있습니다.

8.1.8 PoE Injector Industrial (A-TV-POE2) 66
8.1.9 Power Supply DIN Rail (A-PS-DIN-24V) 67
8.1.10 Fiber Optic to Ethernet Converter (A-CON-FO-RJ45) 68
8.1.11 Ethernet Switch (A-CON-SW) 69
8.1.12 I/O Modules 70
8.2 Mechanical Accessories 71
8.2.1 Mounting Base (A-TV30-MB) 72
8.2.2 Air Purge Collar (A-TV30-AP) 74
8.2.3 Water Cooling Enclosure (A-TV30-AP-WC) 76
8.2.3.1 Assembling 78
8.2.4 Outdoor Enclosure (A-TV-ENCVW) 80
8.2.4.1 Specification 80
8.2.4.2 Installation 81
8.2.5 Swivel Bracket (A-BR-S) 85
8.2.6 Protective Windows (S-TV30-PW) 87

9 MAINTENANCE 88
9.1 Fail-Safe Operation 88
9.2 Troubleshooting 89
9.3 Cleaning the Window 90
9.4 Re-Calibration 90

10 APPENDIX 91
10.1 Field of View Calculator 91
10.2 Avoidance of Condensation 92
10.3 Determination of Emissivity 93
10.4 Typical Emissivity Values 93

원문: Fluke Process Instruments TV30 매뉴얼 · 제조사 원문 자료입니다. 사양은 제조사 사정에 따라 변경될 수 있습니다.

List of Tables

Table **Page**

Table 5-1: Pin Assignment for DIN Connector 30
Table 7-2: OPC UA Items 54
Table 8-3: Available Ethernet PoE Cables 57
Table 8-4: Cable Specification 58
Table 8-5: Color Assignment to DIN Connector 58
Table 8-6: Cable Specification 60
Table 8-7: Color Assignment to DIN Connector 60
Table 8-8: Ethernet Cables – Available Lengths 63
Table 9-9: Troubleshooting 89
Table 10-10: Minimum device temperatures [°C/°F] 92

원문: Fluke Process Instruments TV30 매뉴얼 · 제조사 원문 자료입니다. 사양은 제조사 사정에 따라 변경될 수 있습니다.

List of Figures

Figure **Page**

Figure 1-1: Front and Rear View of TV30 Infrared Cameras 15
Figure 1-2: Available Models 16
Figure 1-3: Principal System Architecture for TV30 SA Camera 17
Figure 2-1: Dimensions of ThermoView TV30 23
Figure 5-1: Field of View for the TV30 Camera 26
Figure 5-2: Principal Cabling of Power Supply and Ethernet 27
Figure 5-3: Principal Cabling of Power Supply and Ethernet 28
Figure 5-4: Connecting the Ethernet M12 Cable to the Camera 29
Figure 5-5: DIN Connector Pin Layout (pin side on camera) 29
Figure 5-6: Wiring the Digital Input (Example) 30
Figure 5-7: Digital Output using Pull-Up 31
Figure 5-8: Digital Output using Open-Drain 31
Figure 6-1: LED Status Indicator 32
Figure 7-1: Home 34
Figure 7-2: Values 35
Figure 7-3: Values Selection 36
Figure 7-4: Calculated Value 37
Figure 7-5: Conditions 38
Figure 7-6: Measurement Condition 39
Figure 7-7: Combination Condition 40
Figure 7-8: Configuration 41
Figure 7-9: Shutter Settings 43
Figure 7-10: User Management 43
Figure 7-11: Networking 44
Figure 7-12: Serial Number and Device Address 45
Figure 7-13: Networking 46
Figure 7-14: Localization 46
Figure 7-15: Device Management 47
Figure 7-16: Internal I/O 48
Figure 7-17: WAGO Module 49
Figure 7-18: Principle of MQTT Network Protocol 51
Figure 7-19: MQTT 51
Figure 7-20: Principle of OPC UA Network 53
Figure 7-21: OPC UA 53
Figure 8-1: Exemplary Ethernet PoE LT Cable 57
Figure 8-2: Pin Assignment (Front View) 57
Figure 8-3: 12-Wire Cable, High Temp Version 58
Figure 8-4: 12-Wire Cable, Low Temp Version 60
Figure 8-5: Terminal Block with Wire Color Assignment 62
Figure 8-6: Ethernet Cable 63
Figure 8-7: PoE Injector for Office Environments 65
Figure 8-8: Industrial Power Supply 67
Figure 8-9: Mounting Base 72
Figure 8-10: Mounting Base Dimensions 72
Figure 8-11: Assembling the Mounting Base 73
Figure 8-12: Camera with Mounting Base 73
Figure 8-13: Air Purge Collar 74
Figure 8-14: Assembling the Air Purge Collar 74
Figure 8-15: Camera with Air Purge Collar and Mounting Base 75
Figure 8-16: Water Cooling Enclosure with Air Purge 76
Figure 8-17: Enclosure Connections 76

원문: Fluke Process Instruments TV30 매뉴얼 · 제조사 원문 자료입니다. 사양은 제조사 사정에 따라 변경될 수 있습니다.

Figure 8-18: Enclosure Dimensions....77
Figure 8-19: Outdoor Enclosure....80
Figure 8-20: Dimensions....81
Figure 8-21: Swivel Bracket with Mount Beam....85
Figure 8-22: Mounting Base to be fixed to the Mount Beam of Swivel Bracket....85
Figure 8-23: Camera with Swivel Bracket....86
Figure 8-24: Protective Window....87
Figure 10-1: Field of View Calculator for the Camera....91

원문: Fluke Process Instruments TV30 매뉴얼 · 제조사 원문 자료입니다. 사양은 제조사 사정에 따라 변경될 수 있습니다.

Compliance Statement

The device complies with the requirements of the European Directives:

EC – Directive 2014/30/EU – EMC

EC – Directive 2011/65/EU – RoHS Compliance amended by Directive (EU) 2015/863

EC – Directive Nr. 1907/2006 – REACH amended by Directive (EU) 2020/2096

EN 61326-1:2013	Electrical measurement, control and laboratory devices - Electromagnetic susceptibility (EMC)
EN IEC 63000:2018	Technical documentation for the evaluation of electrical products with respect to restriction of hazardous substances (RoHS)

Conforms to UK Conformity (UKCA).

Electromagnetic Compatibility (KCC). Applies to use in Korea only. Class A Equipment (Industrial Broadcasting & Communication Equipment)
This product meets requirements for industrial (Class A) electromagnetic wave equipment and the seller or user should take notice of it. This equipment is intended for use in business environments and is not to be used in homes.

Federal Communications Commission (FCC)
CFR 47, Part 15 Subpart B Class A

Safety Information

This document contains important information, which should be kept at all times with the instrument during its operational life. Other users of this instrument should be given these instructions with the instrument. Eventual updates to this information must be added to the original document. The instrument can only be operated by trained personnel in accordance with these instructions and local safety regulations.

Acceptable Operation
This instrument is intended only for the measurement of temperature. The instrument is appropriate for continuous use. The instrument operates reliably in demanding conditions, such as in high environmental temperatures, as long as the documented technical specifications for all instrument components are adhered to. Compliance with the operating instructions is necessary to ensure the expected results.

Unacceptable Operation
The instrument should not be used for medical diagnosis.

Replacement Parts and Accessories
Use only original parts and accessories approved by the manufacturer. The use of other products can compromise the operation safety and functionality of the instrument.

Exemplary Product Labeling

원문: Fluke Process Instruments TV30 매뉴얼 · 제조사 원문 자료입니다. 사양은 제조사 사정에 따라 변경될 수 있습니다.

Safety Symbol	Description
	Consult user documentation.
	Warning. Risk of danger.
	Warning. Hazardous voltage. Risk of electric shock.
	Earth (ground) terminal
	Protective conductor terminal
	This product complies with the WEEE Directive marking requirements. The affixed label indicates that you must not discard this electrical/electronic product in domestic household waste. Product Category: With reference to the equipment types in the WEEE Directive Annex I, this product is classed as category 9 "Monitoring and Control Instrumentation" product. Do not dispose of this product as unsorted municipal waste.
IP67	International Ingress Protection Marking
40	Conforms to China RoHS

원문: Fluke Process Instruments TV30 매뉴얼 · 제조사 원문 자료입니다. 사양은 제조사 사정에 따라 변경될 수 있습니다.

Warning

To prevent possible electrical shock, fire, or personal injury and for safe operation of the Product:

- Read all safety information before you use the Product.
- Carefully read all instructions.
- Do not alter the Product and use only as specified, or the protection supplied by the Product can be compromised.
- Do not use the Product if it operates incorrectly.
- Do not use the Product if it is altered or damaged.
- Do not put metal objects into connectors.
- Use only specified replacement parts.
- See emissivity information for actual temperatures. Reflective objects result in lower than actual temperature measurements. These objects pose a burn hazard.
- Have an approved technician repair the Product.

- Do not use the Product around explosive gases, vapor, or in damp or wet environments.
- Do not apply more than the rated voltage between the terminals or each terminal and earth ground.
- Incorrect wiring can damage the Product and void the warranty. Before applying power, make sure all connections are correct and secure!
- To prevent possible electrical shock, fire, or personal injury make sure that the Product is grounded before use.
- The metallic enclosure of the Product is not necessarily earthed by installation. At least one of the following safety measures must be met to minimize the danger of electrostatic charges:
    - Earth grounding of the cable shield
    - Installing the Product's metallic enclosure on an earth grounded mounting bracket or on any other grounded bases
    - Protect the operator from electrostatic discharge

Caution

- Storage and/or continual operation of the Imager in extreme ambient temperature conditions can result in temporary interruption of operation. If this occurs, let the Imager stabilize (cool down or warm up) before you resume operation.

Contacts

Fluke Process Instruments

America
Everett, WA USA
Tel: +1 800 227 8074 (USA and Canada, only)
+1 425 446 6300
solutions@flukeprocessinstruments.com

EMEA
Berlin, Germany
Tel: +49 30 478 0080
info@flukeprocessinstruments.de

China
Beijing, China
Tel: +86 10 6438 4691
info@flukeprocessinstruments.cn

Technical Support

USA & Canada	+1 425 446 6300
Europe	+49 30478008444
Latin America	+1 831 458 3900
Australia & New Zealand	+1 831 458 3900
Asia	
Singapure	+65 67995578
Japan	+81 3 6714 3114
India	+65 67995578
China	+86 1064384691

techsupport@flukeprocessinstruments.com

www.flukeprocessinstruments.com

원문: Fluke Process Instruments TV30 매뉴얼 · 제조사 원문 자료입니다. 사양은 제조사 사정에 따라 변경될 수 있습니다.

1 Description

The TV30 cameras define a new class of high-performance multi-product thermal imager, providing the models with a full complement of accessories with an IP67 environmental rating that can operate in the harshest environments.

For industrial applications requiring a standalone sensor, the rugged TV30 SA models offer advanced on-board analytics capabilities including integrated and scalable I/O. The integrated I/O is standard with every SA camera and provides a simple, easy to install solution for factory automation and process applications. For added flexibility, the imager can interface directly to external I/O modules for more demanding applications. For even simpler and more direct communications with factory automation systems, the TV30 SA models offer fieldbus flexibility including OPC UA and MQTT communications.

Key features and benefits:

- Wide temperature range: -10 to 1300°C (14 to 2372°F)
- 320 x 240 and 640 x 480 infrared resolution
- 9 or 60 Hz models available
- Rugged housing, IP67 rated
- Remote motorized focus
- Multiple lens options available
- Stand-alone camera with on-board analytics including alarms, condition monitoring, and AOI calculations
- LAN/Ethernet with PoE for communication provides access to Web Server
- High ambient temperatures with cooling enclosure
- Full complement of accessories including air purge and outdoor enclosure

원문: Fluke Process Instruments TV30 매뉴얼 · 제조사 원문 자료입니다. 사양은 제조사 사정에 따라 변경될 수 있습니다.

Figure 1-1: Front and Rear View of TV30 Infrared Cameras

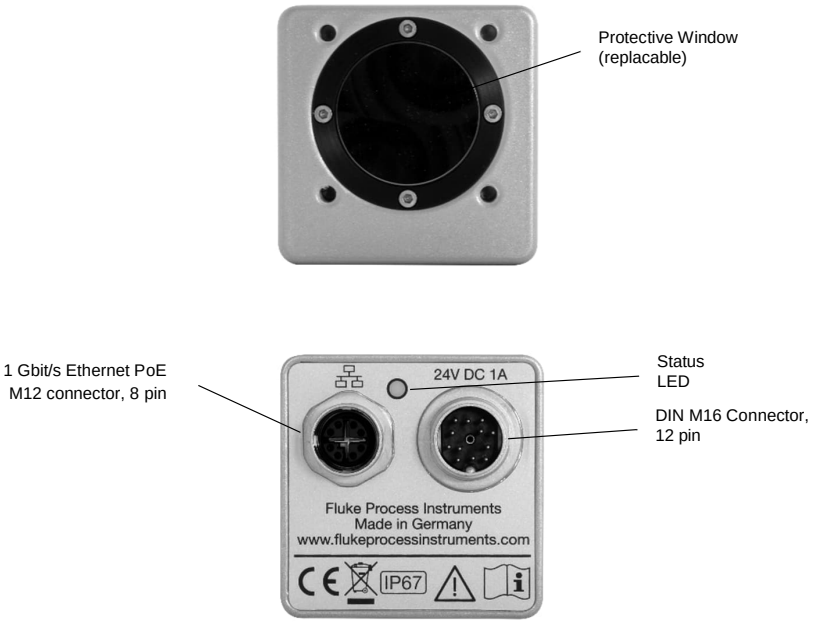

원문: Fluke Process Instruments TV30 매뉴얼 · 제조사 원문 자료입니다. 사양은 제조사 사정에 따라 변경될 수 있습니다.

1.1 Available Models

The following TV30 model variants are available.

Figure 1-2: Available Models

Model	Temp Range	IR Resolution	Lens	Interface	Remark
TV33 SA	-10 to 1300°C (14 to 2372°F)	320 x 240	30° x 22° (Standard) 48° x 36° (Wide) 22° x 16° (Tele)	MQTT OPC UA I/O Modules	operates as stand-alone device built-in http web server for real time view and configuration
TV36 SA	-10 to 1300°C (14 to 2372°F)	640 x 480	30° x 22° (Standard) 48° x 36° (Wide) 22° x 16° (Tele)	MQTT OPC UA I/O Modules	operates as stand-alone device built-in http web server for real time view and configuration

TV3	**X**	**–**	**XX**	**–**	**X**	**–**	**X**	**–**	**XX**
Series	Model		Type		Temp Range		Lens		Frame Rate
	3 - 320x240 pixel **6** - 640x480 pixel		**SA** - stand alone		**L** -10 to 1300°C (14 to 2372°F)		**S** - Standard **W** - Wide **T** - Tele		**60** - 60 Hz **09** - 9 Hz

Example: TV33–SA–L–S–60

원문: Fluke Process Instruments TV30 매뉴얼 · 제조사 원문 자료입니다. 사양은 제조사 사정에 따라 변경될 수 있습니다.

1.2 System Architecture

Figure 1-3: Principal System Architecture for TV30 SA Camera

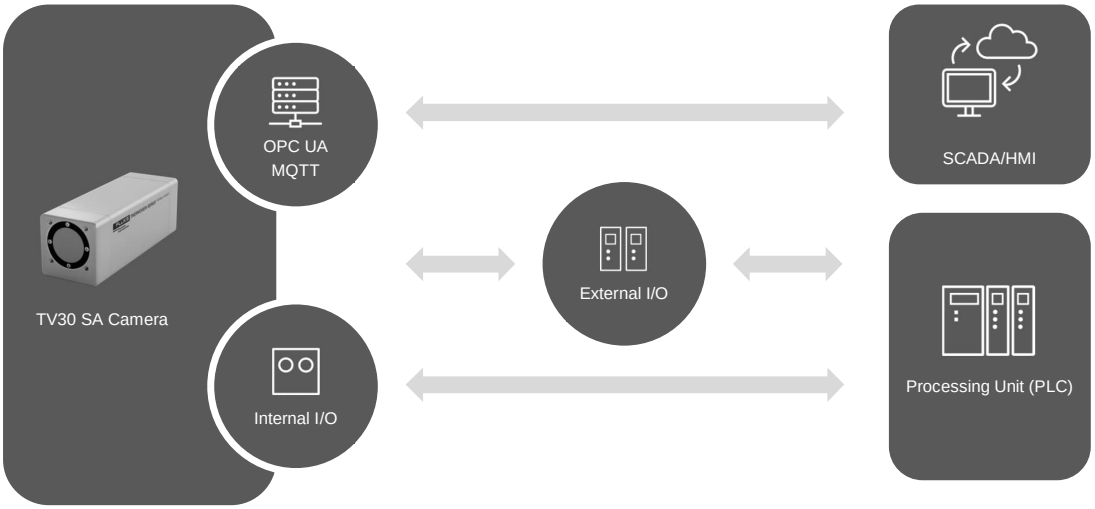

원문: Fluke Process Instruments TV30 매뉴얼 · 제조사 원문 자료입니다. 사양은 제조사 사정에 따라 변경될 수 있습니다.

2 Technical Data

2.1 Measurement Specification

Temperature Range	-10 to 1300°C (14 to 2372°F) indication starting at -20°C (-4°F)
Sub range 1:	-10 to 100°C (14 to 212°F)
Sub range 2:	20 to 250°C (68 to 482°F)
Sub range 3:	200 to 1300°C (392 to 2372°F)
	Auto-range scaling for TV30 SA models
Spectral Response	8 to 14 µm
Detector	uncooled focal plane array (micro bolometer)
Resolution	
TVx3	320 x 240 pixels (76,800 pixels), 24 µm pitch
TVx6	640 x 480 pixels (307,200 pixels), 12 µm pitch
Frame Rate	
TV30 SA	9 Hz – for internal acquisition and processing, 9 Hz refresh rate for web server or 60 Hz – for internal acquisition and processing, 15 Hz refresh rate for web server
Thermal Time Constant[1]	12 ms
Accuracy[2]	± 2°C (4°F) or ± 2% of reading (whichever is greater)

Note
To maintain the accuracy specification, it is recommended that the instrument be calibrated annually.

Temperature Coefficient	0.2°C / K or 0.2% / K (whichever is greater) to be added on top of accuracy specification for every 1 K ambient temperature delta from 25°C (73°F)
Thermal Sensitivity[3] (NETD)	
all models	120 mK (60 Hz), 80 mK (30 Hz, frame averaging, theoretical)
Emissivity Correction	0.10 to 1.00

[1] at 63%
[2] at ambient temperature 25°C (77°F), emissivity = 1.0 and calibration geometry
[3] at internal temperature 25°C (77°F) and sub range 1, emissivity = 1.0 and calibration geometry

원문: Fluke Process Instruments TV30 매뉴얼 · 제조사 원문 자료입니다. 사양은 제조사 사정에 따라 변경될 수 있습니다.

2.2 Optical Specifications

The following optical specification is based on the theoretical calculated spot size derived on the pitch of the camera detector array and the lens focal length. The Instantaneous Field of View (IFOV) specifies the size of the image of an individual detector element in the object plane assuming ideal imaging optics. Typically, for accurate temperature measurements, the target area needs to be larger than that determined by the calculated theoretical IFOV. That target area is stated by the Measurement Field of View (MFOV), which corresponds to an area of 3 x 3 pixels.

2.2.1 Standard Lens

Field of View (FOV) 30° x 22° (horizontal x vertical)
Focus Range 220 mm to ∞ (8.7 in to ∞)

TV33
IFOV 1.6 mrad
MFOV 4.9 mrad

TV36
IFOV 0.8 mrad
MFOV 2.5 mrad

Table 2-1: Exemplary Values for Standard Lens

Measuring distance	Thermal image (H x V)	Model	IFOV (1 pixel)	MFOV (3 x 3 pixel)
0.22 m (0.72 ft)	0.118 x 0.086 m (0.4 x 0.3 ft)	TV33	0.4 mm (14.2 mil)	1.1 mm (42.5 mil)
		TV36	0.2 mm (7.1 mil)	0.5 mm (21.3 mil)
0.5 m (1.6 ft)	0.268 x 0.194 m (0.9 x 0.6 ft)	TV33	0.8 mm (31.4 mil)	2.5 mm (94.3 mil)
		TV36	0.4 mm (15.7 mil)	1.2 mm (47.1 mil)
1.0 m (3.2 ft)	0.536 x 0.389 m (1.7 x 1.2 ft)	TV33	1.6 mm (62.8 mil)	4.9 mm (188.5 mil)
		TV36	0.8 mm (31.4 mil)	2.5 mm (94.3 mil)
5.0 m (16 ft)	2.679 x 1.944 m (8.6 x 6.2 ft)	TV33	8.2 mm (373.2 mil)	24.5 mm (1119.5 mil)
		TV36	4.1 mm (157.1 mil)	12.3 mm (471.4 mil)
10 m (33 ft)	5.359 x 3.888 m (17.7 x 12.8 ft)	TV33	16.4 mm (648.1 mil)	49.1 mm (1944.4 mil)
		TV36	8.2 mm (324.1 mil)	24.5 mm (972.2 mil)

원문: Fluke Process Instruments TV30 매뉴얼 · 제조사 원문 자료입니다. 사양은 제조사 사정에 따라 변경될 수 있습니다.

2.2.2 Wide Angle Lens

Field of View (FOV) 48° x 36° (horizontal x vertical)
Focus Range 100 mm to ∞ (3.9 in to ∞)

TV33
IFOV 2.6 mrad
MFOV 7.9 mrad

TV36
IFOV 1.3 mrad
MFOV 3.9 mrad

Table 2-2: Exemplary Values for Wide Angle Lens

Measuring distance	Thermal image (H x V)	Model	IFOV (1 pixel)	MFOV (3 x 3 pixel)
0.1 m (0.33 ft)	0.089 x 0.065 m (0.3 x 0.2 ft)	TV33	0.3 mm (10.3 mil)	0.8 mm (31 mil)
		TV36	0.1 mm (5.2 mil)	0.4 mm (15.6 mil)
0.5 m (1.6 ft)	0.445 x 0.325 m (1.4 x 1 ft)	TV33	1.3 mm (50.3 mil)	3.9 mm (150.8 mil)
		TV36	0.7 mm (25.1 mil)	2 mm (75.4 mil)
1.0 m (3.2 ft)	0.890 x 0.650 m (2.8 x 2.1 ft)	TV33	2.6 mm (100.6 mil)	7.9 mm (301.7 mil)
		TV36	1.3 mm (50.3 mil)	3.9 mm (150.8 mil)
5.0 m (16 ft)	4.452 x 3.249 m (14.2 x 10.4 ft)	TV33	13.1 mm (508.8 mil)	39.3 mm (1508.3 mil)
		TV36	6.5 mm (251.4 mil)	19.6 mm (754.2 mil)
10 m (33 ft)	8.905 x 6.498 m (29.4 x 21.4 ft)	TV33	26.2 mm (1037 mil)	78.5 mm (3111 mil)
		TV36	13.1 mm (518.5 mil)	39.3 mm (1555.5 mil)

2.2.3 Tele Lens

Field of View (FOV) 22° x 16° (horizontal x vertical)
Focus Range 190 mm to ∞ (7.5 in to ∞)

TV33
IFOV 1.2 mrad
MFOV 3.6 mrad

TV36
IFOV 0.6 mrad
MFOV 1.8 mrad

Table 2-3: Exemplary Values for Tele Lens

Measuring distance	Thermal image (H x V)	Model	IFOV (1 pixel)	MFOV (3 x 3 pixel)
0.19 m (0.63 ft)	0.074 x 0.053 m (0.2 x 0.2 ft)	TV33	0.2 mm (9.1 mil)	0.7 mm (27.2 mil)
		TV36	0.1 mm (4.5 mil)	0.3 mm (13.6 mil)
0.5 m (1.6 ft)	0.194 x 0.141 m (0.6 x 0.4 ft)	TV33	0.6 mm (23 mil)	1.8 mm (69.1 mil)
		TV36	0.3 mm (11.5 mil)	0.9 mm (34.6 mil)
1.0 m (3.2 ft)	0.389 x 0.281 m (1.2 x 0.9 ft)	TV33	1.2 mm (46.1 mil)	3.6 mm (138.3 mil)
		TV36	0.6 mm (23 mil)	1.8 mm (69.1 mil)
5.0 m (16 ft)	1.944 x 1.405 m (6.2 x 4.5 ft)	TV33	6 mm (230.4 mil)	18 mm (691.3 mil)
		TV36	3 mm (115.2 mil)	9 mm (345.7 mil)
10 m (33 ft)	3.888 x 2.811 m (12.8 x 9.3 ft)	TV33	12 mm (475.3 mil)	36 mm (1425.9 mil)
		TV36	6 mm (237.6 mil)	18 mm (712.9 mil)

원문: Fluke Process Instruments TV30 매뉴얼 · 제조사 원문 자료입니다. 사양은 제조사 사정에 따라 변경될 수 있습니다.

2.3 Electrical Specifications

Power	24 VDC, ± 20%, max 15 W (via M16 socket)
Residual ripple	≤ 500 mV (peak-to-peak)
Power over Ethernet	IEEE 802.3at, mode A or B, mixed DC & data
Ethernet	
Connection	M12 socket, 8 wires (full duplex) 10/100/1000 Mbit/s, 1000BASE-TX, Auto-Negotiation electrically isolated from power supply
LED	multi-color indicator, see section 6.2 LED Status Indicator, page 32
Input	
Digital	3x inputs high signal with 4.5 - 24 V, 4 mA low signal with < 2.0 V, 1 mA
Ground	common ground connection for all inputs electrically isolated to GND Power and housing ground (4500 V_{rms})
Output	
Digital	3x outputs Open-Drain max. VDC = + 24 V, 100 mA or Pull-up 0 V / 5 V, max. 7 mA
Ground	common ground connection for all outputs electrically isolated to GND Power and housing ground (2500 V_{rms})

원문: Fluke Process Instruments TV30 매뉴얼 · 제조사 원문 자료입니다. 사양은 제조사 사정에 따라 변경될 수 있습니다.

2.4 Communications

Protocols

TCP/IP version 4
mDNS (Multicast DNS/Bonjour)
HTTPS (Hypertext Transfer Protocol Secure)
SSDP (Simple Service Discovery Protocol)
NTP (Network Time Protocol)
MQTT
OPC UA (OPC Unified Architecture)

Addressing

static IP address (factory default)
DHCP
Auto IP (address range 169.254.0.0/16)
Multicast DNS (mDNS)

Defaults

IP address	192.168.42.132
Subnet mask	255.255.255.0
Gateway	192.168.42.1
Static IP address	enabled
DHCP / Auto IP	disabled
mDNS	enabled
MAC address	see sticker on housing

2.5 Environmental Specifications

Ingress Protection	IP67 (IEC 60529)
Operating temperature	-10 to 50°C (14 to 122°F), still air
Internal operating temp.	max. 70°C (158°F)
Storage temperature	-20 to 70°C (-4 to 158°F)
Humidity	10% to 95%, non-condensing
Shock resistance	IEC60068-2-27: 50 g, 6 ms, 3 axes
Vibration resistance	IEC60068-2-26: 3 g, 11 – 200 Hz, 3 axes
Warm up Period	10 min
Material	Aluminum
Weight	550 g (19.4 oz)

원문: Fluke Process Instruments TV30 매뉴얼 · 제조사 원문 자료입니다. 사양은 제조사 사정에 따라 변경될 수 있습니다.

2.6 Dimensions

Figure 2-1: Dimensions of ThermoView TV30

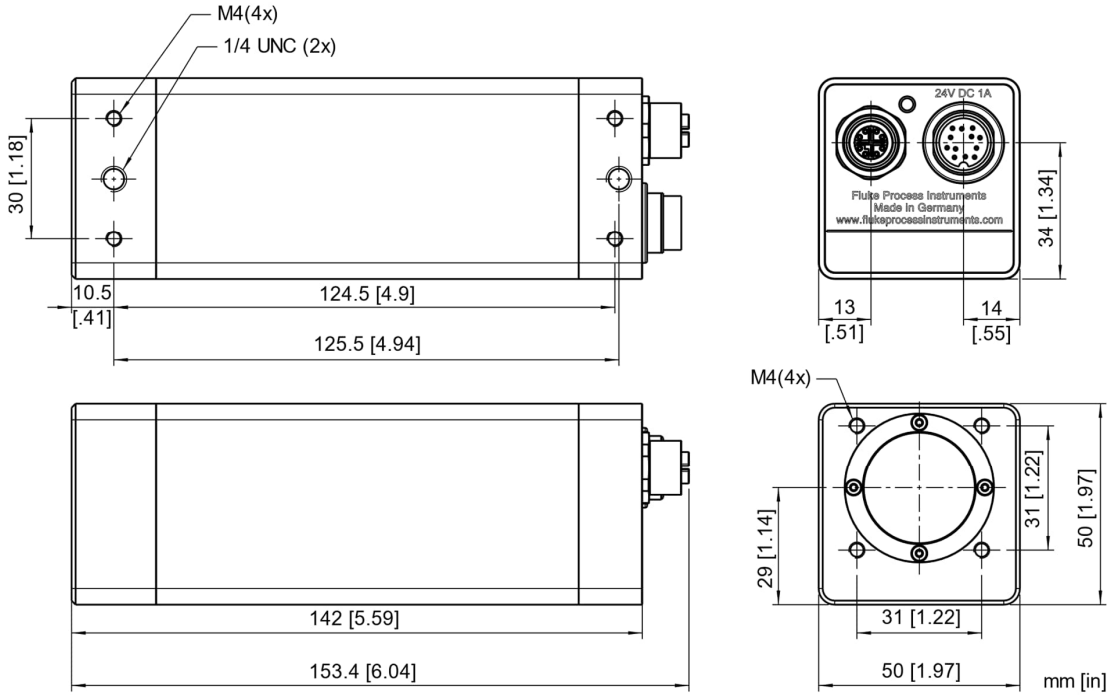

2.7 Scope of Delivery

The scope of standard delivery includes the following:

- ThermoView TV30 camera
- Printed version of Safety Data Sheet & Quickstart

The user manual is available as download on the following web site:
www.flukeprocessinstruments.com/en-us/downloads/product-manuals

원문: Fluke Process Instruments TV30 매뉴얼 · 제조사 원문 자료입니다. 사양은 제조사 사정에 따라 변경될 수 있습니다.

3 Basics

3.1 Measurement of Infrared Temperature

All surfaces emit infrared radiation. The intensity of this infrared radiation changes according to the temperature of the object. Depending on the material and surface properties, the emitted radiation lies in a wavelength spectrum of approximately 1 to 20 µm. The intensity of the infrared radiation (heat radiation) is dependent on the material. For many substances, this material-dependent constant is known. This constant is referred to as the emissivity value.

Infrared cameras are optical-electronic sensors. These sensors are sensitive to the emitted radiation. Infrared cameras consist of a lens, spectral filter, sensor array, and an electronic signal processing unit. The task of the spectral filter is to select the wavelength spectrum of interest. The sensor converts the infrared radiation into an electrical signal. The connected electronics processes this signal for further analysis. The intensity of the emitted infrared radiation is thereby used to determine the temperature of the target. Since the intensity of the infrared radiation is dependent on the material, the appropriate emissivity can be selected on the sensor.

The biggest advantage of the infrared camera is its capability for the contactless determination of target surface temperatures. Consequently, surface temperatures of moving or hard to reach objects can be easily measured.

3.2 Emissivity of Target Object

To determine the emissivity of the target object, see section 10.4 Typical Emissivity Values, page 93. If emissivity is low, measured results could be falsified by interfering infrared radiation from background objects (such as heating systems, flames, fireclay bricks, etc. located close beside or behind the target object). This type of problem can occur when measuring reflective surfaces and very thin materials, such as plastic film and glass.

This measurement error can be reduced to a minimum, if care is taken during installation and the camera is shielded from these reflecting radiation sources.

원문: Fluke Process Instruments TV30 매뉴얼 · 제조사 원문 자료입니다. 사양은 제조사 사정에 따라 변경될 수 있습니다.

4 Environment

4.1 Ambient Temperature

Without water cooling, the TV30 camera is designed for ambient operating temperatures between -10 to 50°C (14 to 122°F). With water cooling equipment, it can be used in environments at higher temperatures.

By forcing water circulation, it is possible to maintain cooled internal housing temperatures. It helps to verify the flow capacity needed and cooling water temperature before proceeding with the installation. It is also necessary to verify the environmental temperature and install the housing at the correct distance from the heating source.

Note that too cold water can cause condensation, which can lead to damage in the device, see section 10.2 Avoidance of Condensation, page 92.

4.2 Atmospheric Quality

If the lens gets dirty, infrared energy will be blocked and the instrument will not measure accurately. It is good practice to always keep the lens clean. The air purge collar accessory helps keep contaminants from building up on the lens, see section 8.2.2 Air Purge Collar (A-TV30-AP), page 74. If you use air purging, make sure a filtered air supply with clean, dry air at the correct air pressure is installed before proceeding with the installation.

4.3 Protection

The TV30 camera complies with the international protection standard IP67.

Note that effectiveness against splashing under IP67 is possible only if terminal caps are in place and all external connectors are connected and comply to IP67 too. To retain the given IP67 protection class, please inspect periodically all seals of the waterproof connectors and end caps.

4.4 Electrical Interference

To minimize electrical or electromagnetic interference or noise, please be aware of the following:

- Mount the instrument as far away as possible from potential sources of electrical interference, such as motorized equipment, which can produce large step load changes.
- Use shielded wire for all input and output connections.
- For additional protection, use conduit for the external connections. Solid conduit is better than flexible conduit in high-noise environments.
- To avoid ground loops, make sure that only ONE POINT is earth grounded, either at the instrument or at the power supply.

Note

When installing the TV30 camera, check for any high-intensity discharge lamps or heaters that may be in the field of view (either background or reflected on a shiny target)! Reflected heat sources can cause a sensor to give erroneous readings.

원문: Fluke Process Instruments TV30 매뉴얼 · 제조사 원문 자료입니다. 사양은 제조사 사정에 따라 변경될 수 있습니다.

5 Installation

Risk of Personal Injury

When this instrument is being used in a critical process that could cause property damage and personal injury, the user should provide a redundant device or system that will initiate a safe process shutdown in the event that this instrument should fail.

5.1 Positioning

Sensor location depends on the application. Before deciding on a location, you need to be aware of the ambient temperature of the location, the atmospheric quality of the location, and the possible electromagnetic interference in that location. If you plan to use air purging, you need to have an air connection available. Wiring and conduit runs must be considered, including computer wiring and connections, if used.

5.2 Distance to Object

The camera provides different lens models to accommodate a wide range of applications. Each individual lens provides different thermal images (Field of View) and minimum detectable pixel sizes (Instantaneous Field of View). The optical diagram below shows the principal graphical representation for measuring distance over the field of view. The manufacturer provides a tool for calculating image sizes, see section 10.1 Field of View Calculator, page 91.

Figure 5-1: Field of View for the TV30 Camera

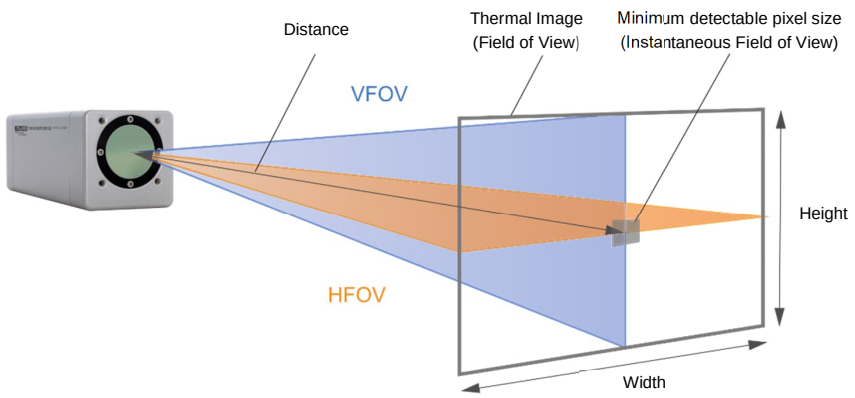

5.3 Focusing

After the camera has been mounted, it is important to make sure that the optimum focus has been established for the given mounting distance. It is important to focus the camera correctly to obtain the sharpest image of the target you wish to view. The motorized focus of the TV30 camera can be set via the built-in web server application.

If the installation distance changes later, it must be ensured that the focus distance is adjusted accordingly.

5.4 Mounting

The camera installation requires the most planning effort. The camera needs to be accurately mounted in relationship to the target. Adjustments to align the camera with the target may have to be designed into the camera

mounting to provide the required alignment accuracy. Avoiding or removing physical mounting limitations and obstructions in the camera's optical path, may also be required.

5.5 Powering

5.5.1 Power over External Supply

In case the camera is not supplied with power via Ethernet PoE, power can also be supplied using the 12-wire cable. Follow the steps below:

- Connect the 12-wire connector to the camera
- Tighten the outer nut of the female connector
- Wire the open pig tail ends to the terminal of the external power supply. Take care about the right polarity. For power, connect the **black** wire to Ground (-) and the **red** wire to +VDC.

Note
The cable shield can be used to connect it to earth ground!

Note
The external power supply should be 24 VDC in a range of ± 20%!

Figure 5-2: Principal Cabling of Power Supply and Ethernet

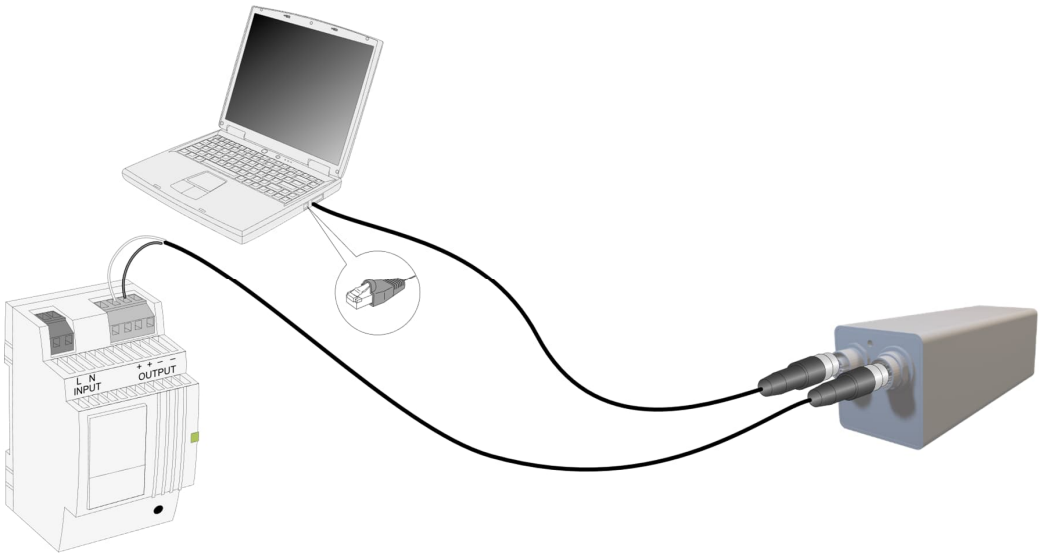

12-wire cables offered by the manufacturer can be found as electrical accessories, see section 8.1.2 12-Wire Cable, High Temp (A-CB-HT-M16-W12-xx), page 58, and 8.1.3 12-Wire Cable, Low Temp (A-CB-LT-M16-W12-xx), page 60.

A power supply offered by the manufacturer can be found as electrical accessories, see section 8.1.9 Power Supply DIN Rail (A-PS-DIN-24V), page 67.

원문: Fluke Process Instruments TV30 매뉴얼 · 제조사 원문 자료입니다. 사양은 제조사 사정에 따라 변경될 수 있습니다.

5.5.2 Power over Ethernet

The camera is supplied with power via the PoE (Power over Ethernet) following the IEEE 802.3at standard. PoE allows a single cable to provide both data connection and electric power to the sensor. The following figure shows exemplarily the connection to a computer or a non-PoE switch.

Figure 5-3: Principal Cabling of Power Supply and Ethernet

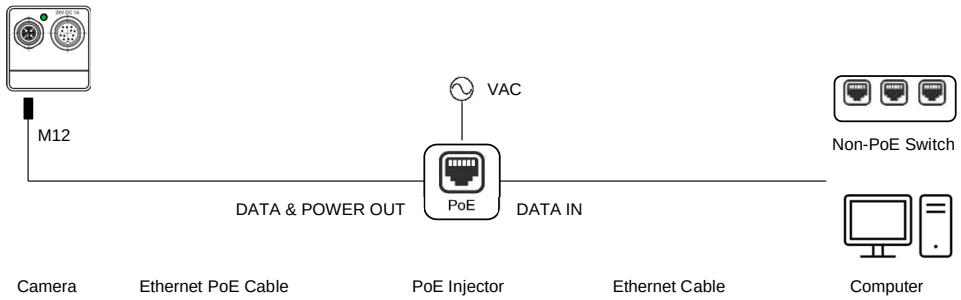

A PoE injector offered by the manufacturer can be found as electrical accessories, see section 8.1.7 PoE Injector (A-TV-POE1), page 65.

5.6 Networking

To configure the camera, connect the device directly to a PC or Laptop. To display temperature information and to setup the imager, the TV30 camera is equipped with an onboard web server, see section 7 Web Server, page 34.

The number of cameras in a network is only limited by the network performance (required frames per second fps). This means the need to consider the speed capability for transmitting the data and the performance of the master (e.g., a PLC) for processing all data. For example, it would be possible to network multiple cameras at a reduced frame rate of 1 fps for each.

Since Ethernet ports on a computer are (almost) never PoE capable, you will require a suitable PoE injector.

The network connection can be made in two ways:

- Connect the camera directly to a suitable PoE capable switch that is connected to the master device (e.g. your PC/Laptop)
- Connect the camera via a suitable PoE injector to a non-PoE capable switch that is connected to the master device (e.g. your PC/Laptop)

The following methods are available for assigning an IP address to the camera:

- Static IP address (camera's factory default)
- DHCP
- Auto IP
- mDNS

For further information, see section 7.3.2 <Settings> <Networking>, page 44.

5.6.1 Ethernet Connector

To connect the Ethernet M12 cable, follow the steps below:

- Remove the rear metal sealed connector cap for the M12 connector at the rear side of the camera body.
- Attach the male M12 cable plug (2) straight into the female terminal (1) by turning the outer mounting thread (3) in clockwise direction.
- Attach the RJ45 connector at the other end of the cable to the related device, like Ethernet switch, Ethernet PoE switch, computer, or fiber optic converter.

Figure 5-4: Connecting the Ethernet M12 Cable to the Camera

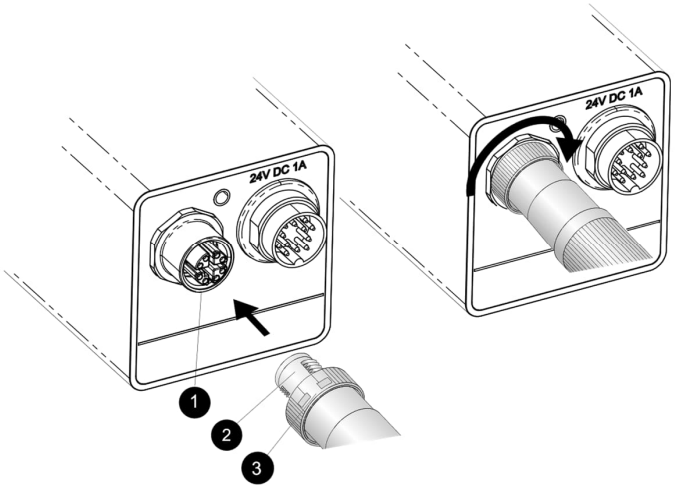

Ethernet cables offered by the manufacturer can be found as electrical accessories, see section 8.1.1 Ethernet PoE Cable (A-CB-xx-M12-W08-xx), page 57.

For dedicated PoE injectors are offered by the manufacturer, see section 8.1.7 PoE Injector (A-TV-POE1), page 65, and 8.1.8 PoE Injector Industrial (A-TV-POE2), page 66.

5.7 Connecting

5.7.1 12-Pin Connector

The camera is equipped with a 12-pin connector. Via this, the camera provides access to the digital inputs and outputs and the power supply in case the device is not supplied via Ethernet PoE.

Figure 5-5: DIN Connector Pin Layout (pin side on camera)

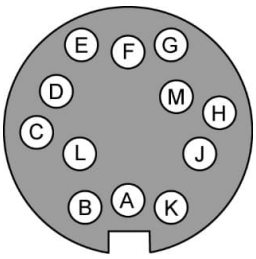

원문: Fluke Process Instruments TV30 매뉴얼 · 제조사 원문 자료입니다. 사양은 제조사 사정에 따라 변경될 수 있습니다.

Table 5-1: Pin Assignment for DIN Connector

Connector Pin	TV30 SA	
M	+ 24 VDC	
L	GND Power	
D	Input 1	
F	Input 2	
B	Input 3	
C	GND Input	
J	Output 1	
H	Output 2	
G	Output 3	
K	GND Output	
A	n.a.	
E	Shield	

5.7.2 Digital Inputs

The TV30 SA camera provides 3 digital inputs which can be used as switch to initiate different tasks, see section 7.4.1 <I/O> <Internal>, page 48.

A high signal requires voltages of 4.5 - 24 V. A low signal is detected for voltages below 2 V.

Figure 5-6: Wiring the Digital Input (Example)

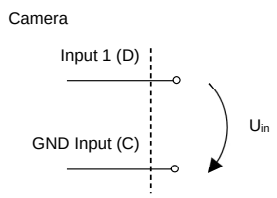

Note
The digital inputs are galvanically isolated from GND power and housing ground but not from each other (same ground for all inputs).

5.7.3 Digital Outputs

The TV30 SA camera provides 3 digital outputs which can be used to indicate different tasks, see section 7.4.1 <I/O> <Internal>, page 48.

The signal output can be done in a specific mode. The desired mode can be set via the user and always applies to all outputs. The following modes are available:

- Pull-Up – the pull-up resistor is provided internally. The logical high level is fixed to +5 VDC.
- Open-Drain – requires the provision of an external pull-up resistor and a voltage supply. The logical high level is determined by the external voltage supply and not limited to +5 VDC.

Figure 5-7: Digital Output using Pull-Up

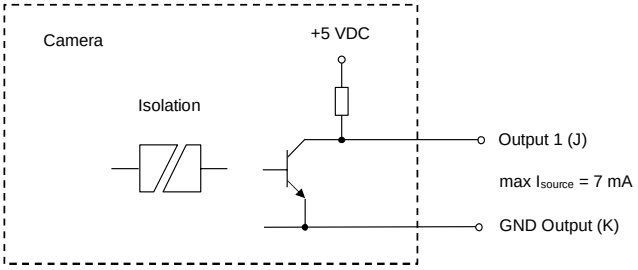

Figure 5-8: Digital Output using Open-Drain

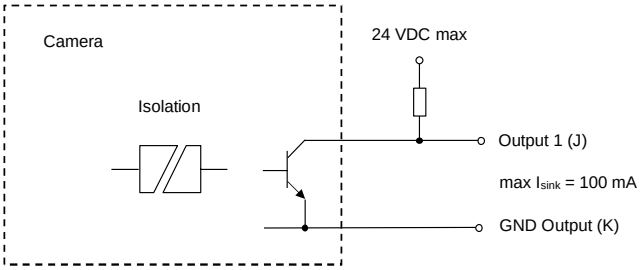

Note
The digital outputs are galvanically isolated from GND power and housing ground but not from each other (same ground for all outputs).

Note
To improve the signal quality and reducing the distortion caused due to line reflections, the line on the receiver side can be terminated with a Schottky diode to limit possible over- and undershoots.

원문: Fluke Process Instruments TV30 매뉴얼 · 제조사 원문 자료입니다. 사양은 제조사 사정에 따라 변경될 수 있습니다.

6 Operation

6.1 Getting Started

Find below the first basic steps to work with the camera:

1. **Powering**
   Supply power to the camera either via Power over Ethernet (PoE) or directly via the 12-wire connector on the back of the housing, see section 5.5 Powering, page 27.
2. **Green LED**
   After applying voltage, the camera is in the warm-up phase, the status indicator on the back of the camera housing is red. After a few seconds, the LED must turn to solid green. A blinking or other colors indicate an error, see section 6.2 LED Status Indicator, page 32.
3. **Networking**
   To establish the communication, you need to know the IP address of the camera. In the factory default setting, the camera comes in the static IP address mode and the address preset to **192.168.42.132**
4. **Communicating**
   Open a standard web browser on a computer. Type the camera's IP address in the address line of the browser. After the communication has been successfully established, the home page of the camera's internal website appears with the login information. The following credentials are given with factory default.
   Username: **admin**
   Password: **admin**
5. **Configuring**
   For an object area that is to be analyzed in particular, you can generate an AOI value following a specific measurement function (Min, Max, Avg), see section 7.2.1 <Camera> <Values>, page 35.

6.2 LED Status Indicator

The TV30 camera has a built-in multi-color LED in the rear panel, which indicates the current health and alarm status.

Figure 6-1: LED Status Indicator

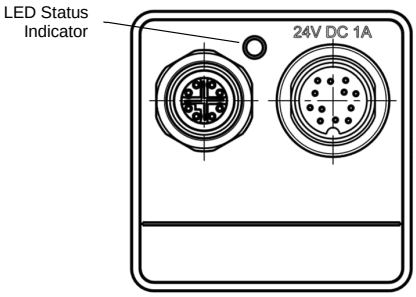

The LED patterns are:

1. Blinking yellow – booting and warming-up
2. Solid green – no errors, IP address obtained, and Ethernet cable connected
3. Blinking red – various errors
4. Blinking green – flash memory being updated
5. Solid blue – shutter closed
6. Solid red – over ambient temperature

원문: Fluke Process Instruments TV30 매뉴얼 · 제조사 원문 자료입니다. 사양은 제조사 사정에 따라 변경될 수 있습니다.

Please note that the camera displays these patterns in a priority order, higher numbered events mask lower numbered events. So, for example, the camera is connected to Ethernet (solid green) but have an over-temperature condition. In that case, the LED displays a solid red until the over-temp condition is cleared, then the LED would display solid green.

6.3 Shutter

The camera is equipped with an internal lens shutter. The shutter closes automatically required for a reference recalibration to improve camera performance. It is not a substitute for a factory blackbody calibration. With the shutter closed, no temperature measurements are taking place. For more information, see section 7.2.3 <Camera> <Configuration>, page 41.

원문: Fluke Process Instruments TV30 매뉴얼 · 제조사 원문 자료입니다. 사양은 제조사 사정에 따라 변경될 수 있습니다.

7 Web Server

Several information of the camera is available and will be displayed using a standard web browser. Furthermore, several settings can be initiated and transferred to the imager. It is possible to display or set the device IP address, to modify the focus of the infrared camera or to upload a new firmware.

7.1 Home Page

Figure 7-1: Home

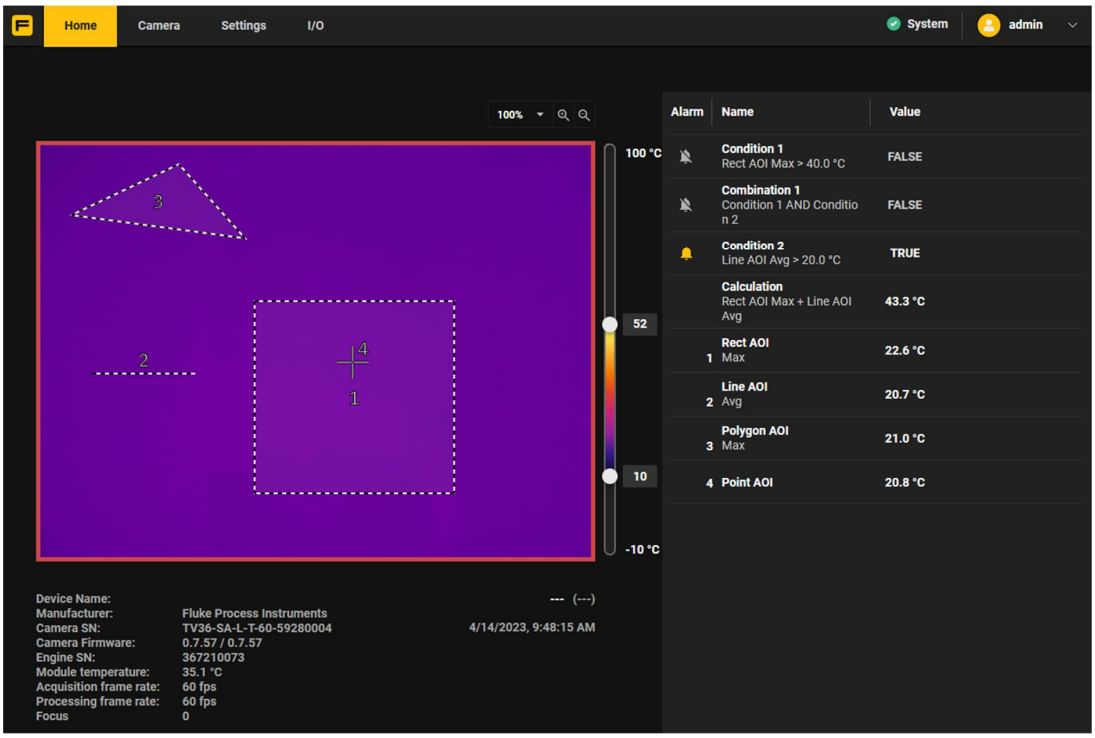

The Home page summarizes all relevant information at runtime at a glance.

The current thermal image is shown as well as a list of all defined conditions, AOI's (area of interest) and their current results. A red frame around the thermal image indicates an alarm condition.

Information regarding important camera data is shown in the lower left corner such as manufacturer, serial number, firmware revision number, internal module temperature, frame rate, and others.

The Home page is for display purposes only. It is the only page that it visible for a viewer user. Configurations must be made in advance by an administrator or developer under the Camera page.

원문: Fluke Process Instruments TV30 매뉴얼 · 제조사 원문 자료입니다. 사양은 제조사 사정에 따라 변경될 수 있습니다.

7.2 Camera Pages

7.2.1 <Camera> <Values>

Figure 7-2: Values

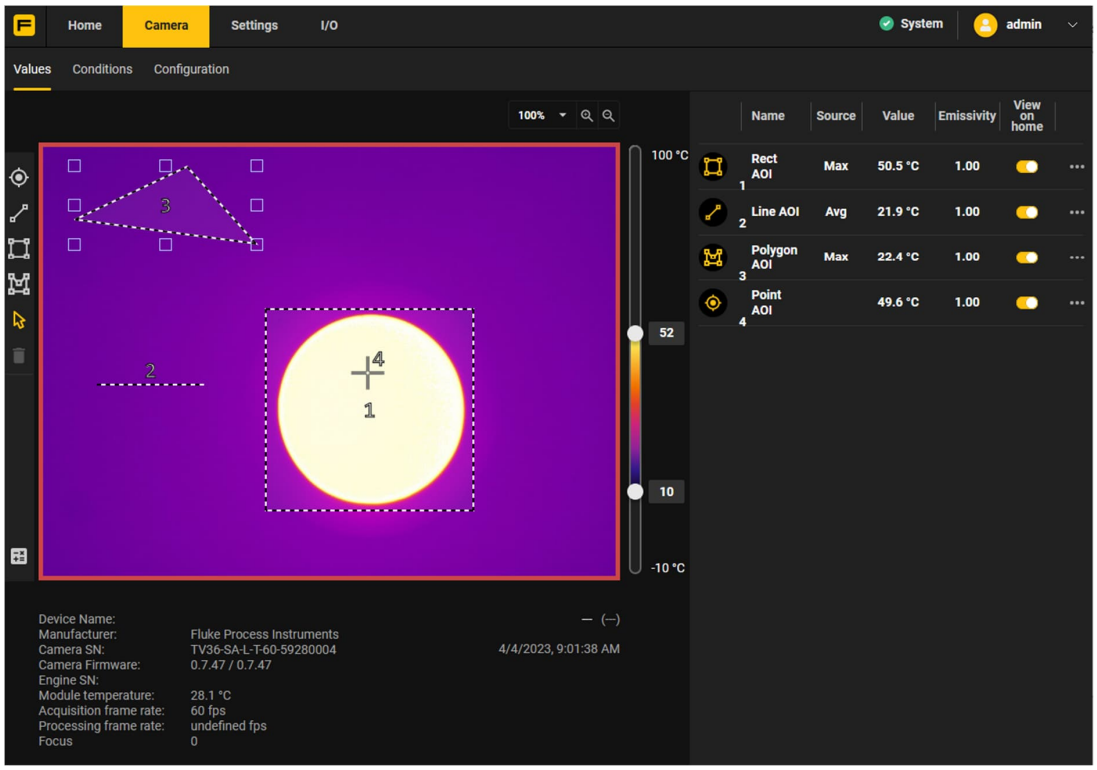

The camera uses analysis objects to present thermal information contained in an infrared image called AOI's (area of interest). An AOI can be built using one of the tools on the left side of the page:

- Points (spots)
- Lines
- Rectangles
- Polygons

An AOI is involved in the temperature calculation for all pixels which belong to the AOI area. Every AOI can have its own emissivity and selectable math sources to calculate an AOI result. An AOI result is displayed as Value under the corresponding column.

More than one mathematical source can be activated simultaneously for an AOI. In the overview list, an AOI with multiple mathematical sources is listed in multiple lines, but under the same name and the identical numerical index.

Selecting View on Home will show the AOI values on the Home page so that during runtime the values are visible for viewer users as well.

Clicking on the three dots at the end of the line opens the properties dialog for the desired AOI.

원문: Fluke Process Instruments TV30 매뉴얼 · 제조사 원문 자료입니다. 사양은 제조사 사정에 따라 변경될 수 있습니다.

Figure 7-3: Values Selection

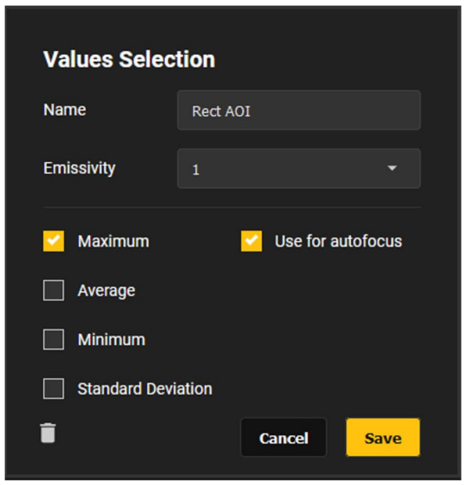

Name	describes the AOI via a name
Emissivity	defines the desired emissivity value specifically assigned to the AOI In case of overlapping pixels of several AOIs, the emissivity value of the last generated AOI is applied for these pixels.
Maximum	calculates the maximum for all pixels belonging to the AOI
Average	calculates the average for all pixels belonging to the AOI
Minimum	calculates the minimum for all pixels belonging to the AOI
Standard Deviation	calculates the standard deviation for all pixels belonging to the AOI
Focus Area	the focus of the camera is aligned with the location of that AOI when Autofocus Type <AOI> is selected under the Configuration page. This function is exclusive for one AOI meaning no 2nd AOI can have this function.
🗑	deletes the AOI.

Note
The number of calculations for values is limited to 32. This limit is reached for example via 32 AOI's with one mathematical value each (max, avg, min, std.) or 16 AOI's with 2 mathematical values each.

Clicking on the math symbol icon on the left side of the page opens the dialog for the calculated value.

Figure 7-4: Calculated Value

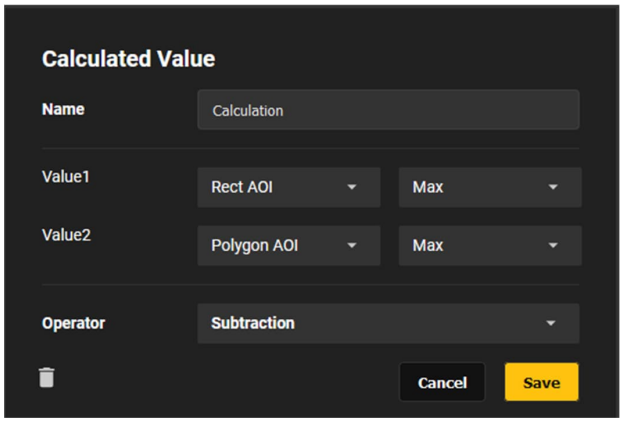

Name	describes the Calculated Value via a name
Value 1	defines the first operator for the calculation (e.g. Rect AOI)
Value 2	defines the second operator for the calculation (e.g. Polygon AOI)
Operator	Defines the math function for the calculation of value 1 with value 2: Subtraction or Delta (absolute substraction)
🗑	deletes the calculation.
Example	*The calculated value is the subtraction of Rect AOI and Polygon AOI*

원문: Fluke Process Instruments TV30 매뉴얼 · 제조사 원문 자료입니다. 사양은 제조사 사정에 따라 변경될 수 있습니다.

7.2.2 <Camera> <Conditions>

Figure 7-5: Conditions

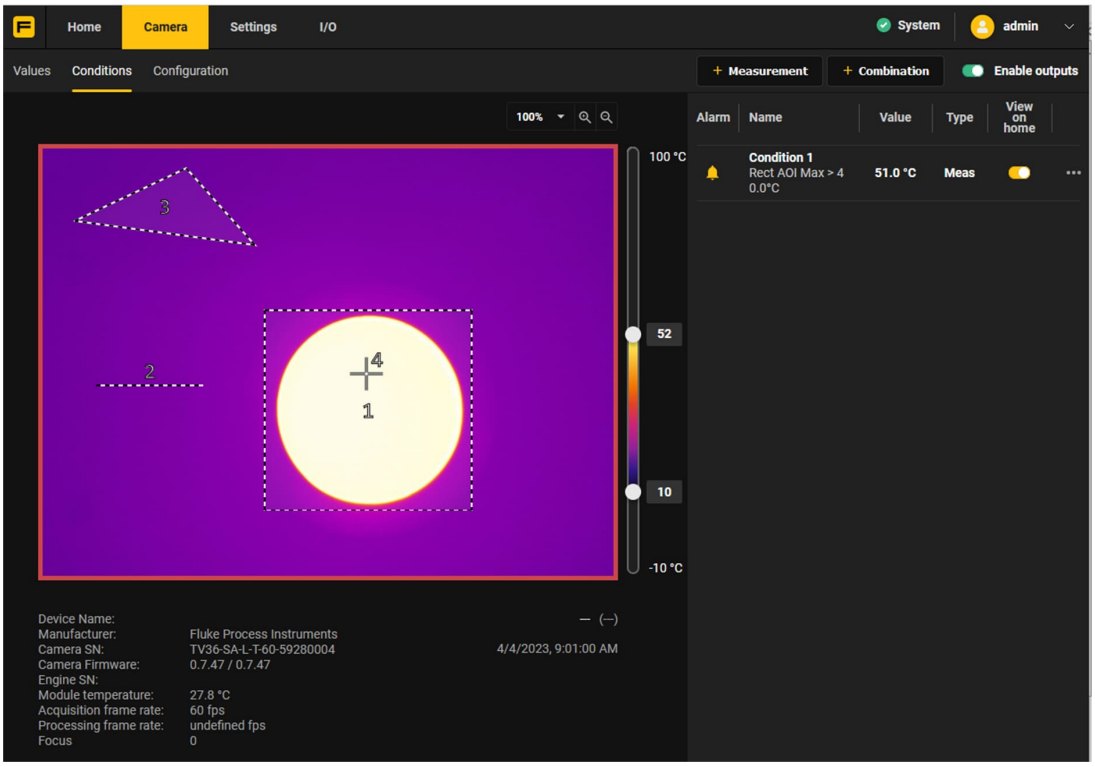

Condition is a state that must exists to activate a specific action.

Most of the process control logic is defined by conditions. Conditions are universal, they can be used in different circumstances: alarm conditions, conditions that output temperature values and so on. The following conditions are available:

- **Measurement**
  Conditions that use temperature measurements made on acquired infrared images
- **Combination**
  Combination of two conditions using logical operations

원문: Fluke Process Instruments TV30 매뉴얼 · 제조사 원문 자료입니다. 사양은 제조사 사정에 따라 변경될 수 있습니다.

Figure 7-6: Measurement Condition

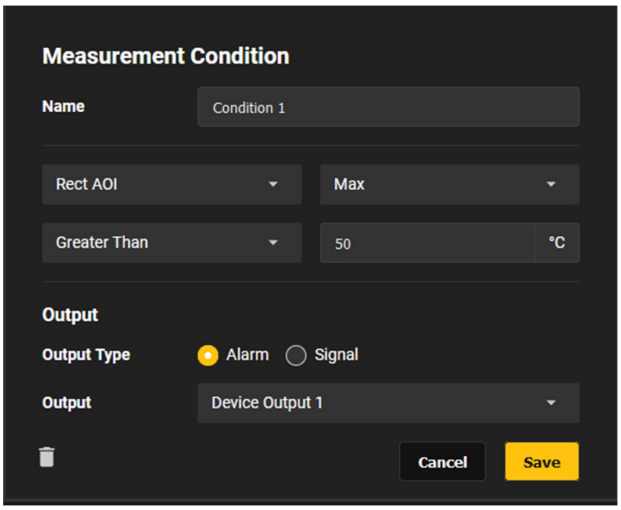

Name	defines the name of the condition
Value	The value can be provided from an AOI, a constant temperature value, or the internal device temperature.
Operator	Defines the comparison operation between the value and a fixed temperature. The logical operator is selectable between Greater Than or Less Than
Output	
Output Type	Alarm: outputs a digital value 0/1 when the condition is true. The system goes into the alarm state. Signal: outputs a digital value 0/1 when the condition is true. The system does not go into the alarm state.
Output	defines the desired output channel
🗑	deletes the condition.
Example	*Condition will be become true if maximum temperature of Rect AOI is greater than 50°C then activate an alarm on the internal output 1 of the camera.*

원문: Fluke Process Instruments TV30 매뉴얼 · 제조사 원문 자료입니다. 사양은 제조사 사정에 따라 변경될 수 있습니다.

Figure 7-7: Combination Condition

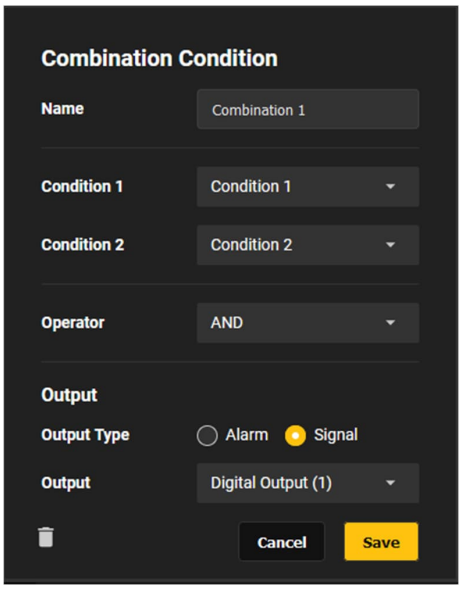

Name	defines the name of the combination
Condition 1	refers to the status of a predefined condition
Condition 2	refers to the status of a predefined condition
Operator	links condition 1 and condition 2 with the logical operator AND or OR
Output	
Output Type	Alarm: outputs a digital value 0/1 when the combination is true. The system goes into the alarm state. Signal: outputs a digital value 0/1 when the combination is true. The system does not go into alarm.
Output	defines the desired output channel
🗑	deletes the combination
Example	*Combination will be become true if condition 1 AND condition 2 are true then activate an alarm on the internal digital output 1 of the camera*

원문: Fluke Process Instruments TV30 매뉴얼 · 제조사 원문 자료입니다. 사양은 제조사 사정에 따라 변경될 수 있습니다.

7.2.3 <Camera> <Configuration>

Figure 7-8: Configuration

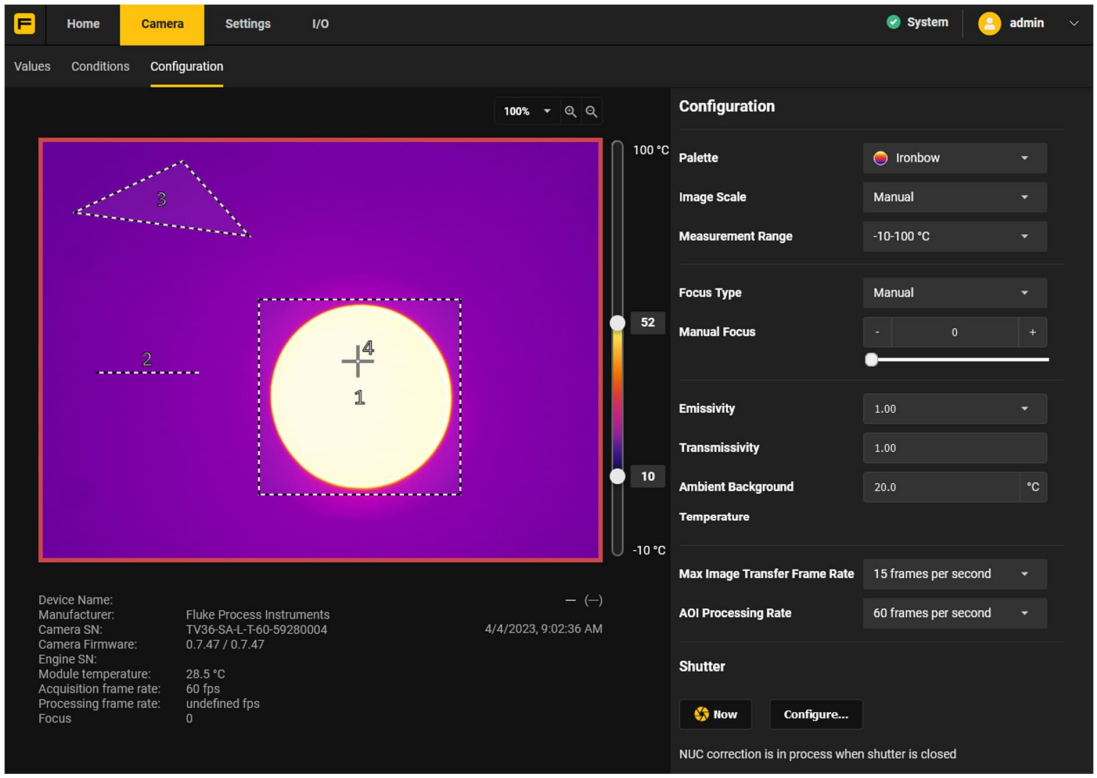

Palette and Measurement Range

In infrared images color of every pixel depends on its temperature. The TV30 camera has means to adjust this dependency to make visual appearance of the image better and to intensify important details. To set relation between colors and temperature you need to select color palette and define temperature range.

Palette	Selects one of the predefined color palettes. Pixels with temperatures below the lower range limit are shown with the bottom palette color. Pixels with temperatures above the upper range limit are shown with the top palette color. Pixels with temperatures in between have corresponding intermediate palette colors.
Image Scale	<Auto> the camera calculates the temperature range automatically to make all temperatures present on the image. <Manual> sets the temperature range limits manually by using the sliders just to the right of the thermal image. A manual setting is useful when not all temperatures are of interest, but the image needs a dedicated sub-range.
Measurement Range	Switches between the measurement sub-ranges of the camera

원문: Fluke Process Instruments TV30 매뉴얼 · 제조사 원문 자료입니다. 사양은 제조사 사정에 따라 변경될 수 있습니다.

Focus

The camera is equipped with a motorized focus. The focus setting is controlled by Autofocus Type.

Autofocus Type	<AOI> focus setting is applied to an exclusive AOI <Full Image> focus setting is applied to the whole infrared image <Manual> focus setting is controlled manually
Manual Focus	Allows to drive motorized focus position by hand if Autofocus Type is set to <Manual>. Displayed focus position number has no physical meaning.

Measurement Calculation

Emissivity	changes the global emissivity. The global emissivity is used to correct the temperature reading of the target. The target may read lower than its true temperature, due to the target emissivity being less than 1.
Transmissivity	there could be something in the optical path, such as a window that absorbs a percentage of the infrared radiation before it gets to the camera. The transmission value is an adequate correction factor to compensate that effect.
Ambient Background Temperature	compensates the ambient background temperature of the surrounding area that might be in the field of view. When the target's emissivity is less than 1, the background temperature can interfere with measurement accuracy. The error is reduced by accurately setting the background temperature. Sometimes it is not possible to completely reduce background induced errors because there could be various background objects of different temperatures reflecting off the target. The best way to minimize these errors is to shield the target as best as possible from stray radiation paths.

Frame Rate

Max Image Transfer Frame Rate	The rate at which image data will be updated on the webserver. Rate can be reduced to save bandwidth.
AOI Processing Rate	changes the processing frame rate for all AOI's to the desired speed.

Shutter

The camera needs to run non-uniformity correction (NUC) procedure from time to time to maintain accurate temperature measurements. For performing this, the camera is equipped with an internal lens shutter. When it is the time to run NUC, shutter closes the detector's field of view and NUC coefficients are recalculated which may take several seconds. When the shutter is closed, the camera does not measure temperatures of the scene and the measurement device is on hold. It is necessary to ensure that NUC is not blocking the camera use when temperature measurement is running, especially when object is in view for a short period of time.

Now	Immediately activates the shutter.
Configure…	Opens a dialog box for the shutter settings.

원문: Fluke Process Instruments TV30 매뉴얼 · 제조사 원문 자료입니다. 사양은 제조사 사정에 따라 변경될 수 있습니다.

TS-TL-FPI-053

we measure, we calibrate, we validate.
㈜테솔 · www.tessol.com TS-TL-FPI-053 42 / 95
KOLAS 국제공인교정기관 · ISO/IEC 17025

Figure 7-9: Shutter Settings

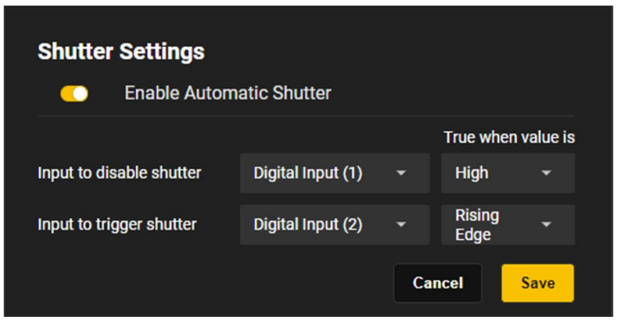

Enable Automatic Shutter	enables/disables the automatic shutter
Input to disable shutter	links to an internal input of the camera or to a Wago input
Input to activate shutter	links to an internal input of the camera or to a Wago input
True when value is	“high” or “low” or “rising edge” or “falling edge”
Example	*Shutter is disabled when value on digital input 1 is equal to “high”.* *Shutter is triggered when value on digital input 2 shows a rising edge.*

7.3 Settings Pages

7.3.1 <Settings> <User Management>

Figure 7-10: User Management

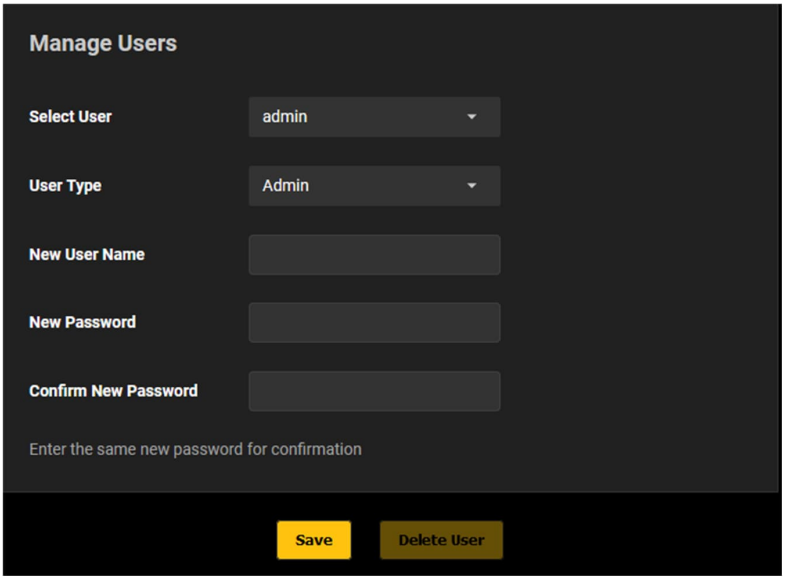

원문: Fluke Process Instruments TV30 매뉴얼 · 제조사 원문 자료입니다. 사양은 제조사 사정에 따라 변경될 수 있습니다.

Select User	Switches between predefined users. <New User> adds a profile for a new user.
User Type	<Admin> - providing full privileges <Developer> - providing access to Home and Camera page <Viewer> - providing viewing access to Home page

7.3.2 <Settings> <Networking>

The IP address of the camera is not free of choice. It must be unique in the network, meaning that no other device in the network may run at the same IP address. The following sections describe the various procedures for assigning a unique IP address to the camera.

Note
Make sure that the devices that can communicate with the camera (e.g. your PC/Laptop) need to be connected to the same network, either via a wired connection or a wireless access point.

Figure 7-11: Networking

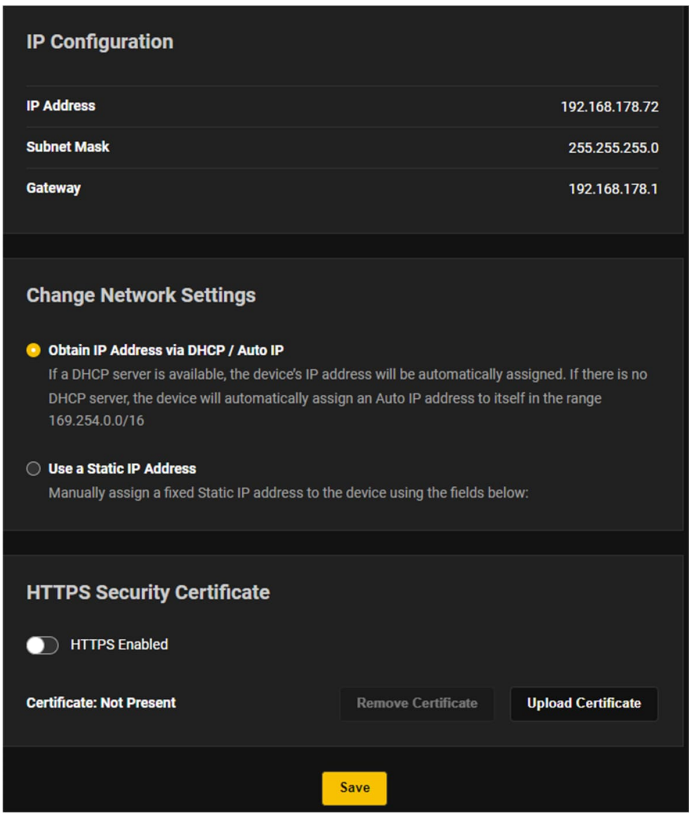

7.3.2.1 Obtain IP Address via DHCP / Auto IP

Using DHCP

In DHCP mode, connect the infrared camera to a network which has a DHCP server available. Typically, the router of your network runs a DHCP server, but this can also run in a server computer. Contact your network administrator for more information about your network setup.

The DHCP server will automatically provide an available IP address to the camera in the address range that the network administer has configured.

Using Auto IP

If there is no DHCP server in the network, the camera switches into the Auto IP mode and automatically assigns an Auto IP address in the range 169.254.0.0/16

Using mDNS

With DHCP enabled, the camera also provides Multicast DNS (mDNS). Using mDNS, the user can determine which specific IP address was assigned to the camera via DHCP. Follow the steps below to use mDNS.

1. Note the serial number of the device to be found on the product label sticking on the housing.
2. On your computer, open a standard web browser such as Edge, Firefox, Chrome, or Safari.
3. Enter the following address in the address bar of the browser:
   http://xxxxxxxx.local
   whereby xxxxxxxx represents the noted serial number of the device.
4. The assigned IP address can now be read out.

Figure 7-12: Serial Number and Device Address

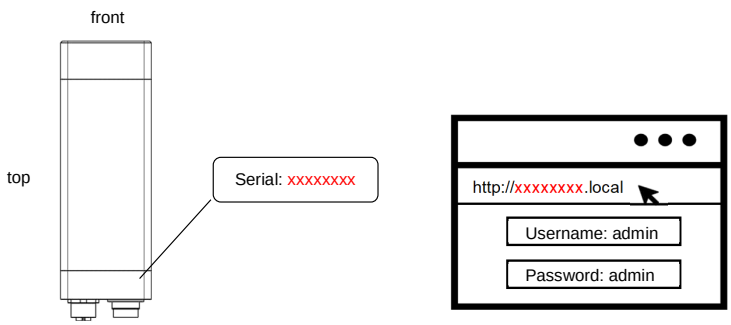

7.3.2.2 Use a Static IP Address

In Static IP Address mode, connect the infrared camera to any network (with or without DHCP server). A manually determined, fixed IP address can be assigned to the TV30 imager via the dashboard.

Note

Manually setting a static IP Address wrongly can lead to the device becoming unreachable. Make sure you configure the network adapter of the device correctly or ask your network administrator for help.

7.3.2.3 HTTPS Security Certificate

The user can upload a public key and security certificate. Without a public key and security certificate the user will get a security warning in the browser.

원문: Fluke Process Instruments TV30 매뉴얼 · 제조사 원문 자료입니다. 사양은 제조사 사정에 따라 변경될 수 있습니다.

Figure 7-13: Networking

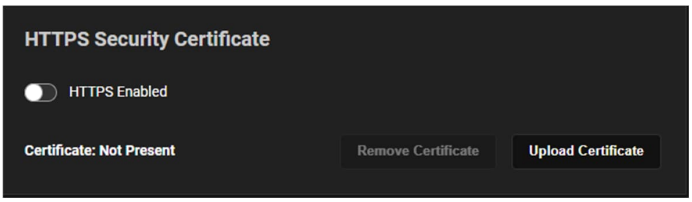

7.3.3 <Settings> <Localization>

Figure 7-14: Localization

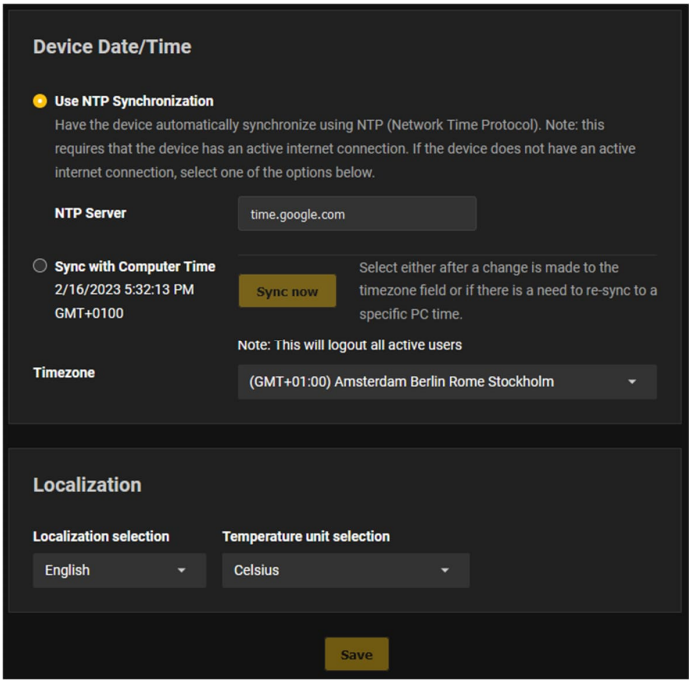

Device Date/Time

Use NTP Synchronization	NTP is the default time synchronization method. It uses the router/modem in the network or the Google NTP server *time.google.com*
Sync with Computer Time	You can also synchronize the camera with the computer time. Use <Sync now> to achieve this.
Time zone	Sets the desired time zone

Localization

Localization selection	Selects the desired language for the user interface. Available languages are: English, Spanish, German, French, Simplified Chinese
Temperature unit selection	Swaps between Celsius and Fahrenheit

7.3.4 <Settings> <Device Management>

Figure 7-15: Device Management

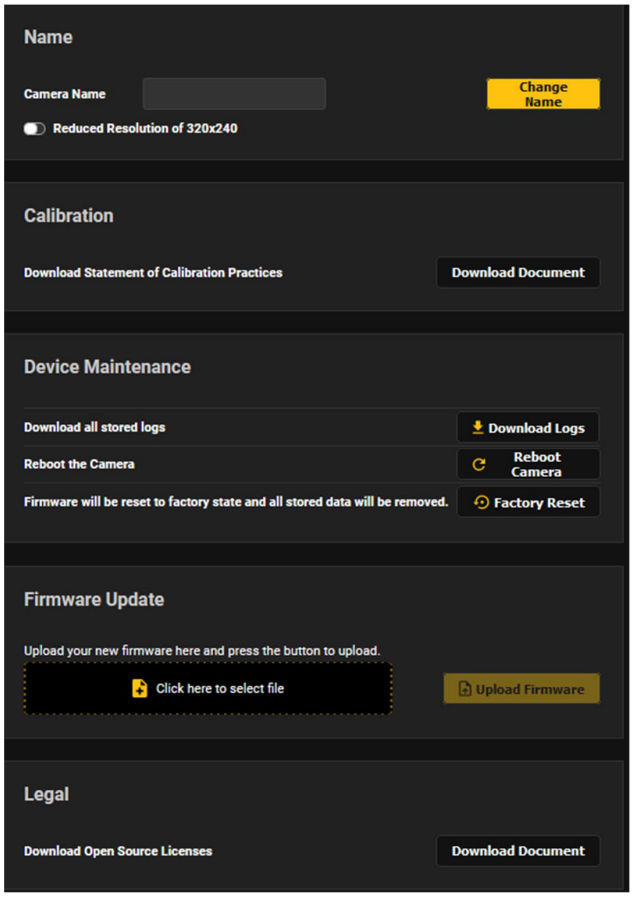

Name

Camera Name	Specifies a name for the camera.
Reduced Resolution …	Switches to the camera to a lower resolution. This could be helpful to reduce data traffic in a network.

Calibration

Download Statement of Calibration Practices	Downloads the statement calibration practices for the camera as a pdf file.

Device Maintenance

Download all stored logs	Downloads the data of all logs that are stored on the device. The log files contain diagnostic information that can be shared with technical support on request.
Reboot the Camera	Gives the device a reboot.

원문: Fluke Process Instruments TV30 매뉴얼 · 제조사 원문 자료입니다. 사양은 제조사 사정에 따라 변경될 수 있습니다.

Firmware will be reset …	Your firmware will be reset to factory state and all stored data will be removed/reverted.
Firmware Update	
Firmware Update	allows to install a new firmware version to the device. Contact the TechSupport team for getting latest firmware file available. 1. The button <Click here to select a file> allows to select the desired firmware file from the file selection dialog box. Click <Open>. 2. With clicking on <Upload Firmware>, the file will be uploaded to the device. The progress bar indicates the progress of the upload. 3. Then, the device will install the new firmware. This can take several minutes. While installing, the LED indicator on the rear panel of the device turns pink. 4. When the firmware update is complete, the website for the log-in reappears and the LED indicator of the camera turns from Blinking yellow (warm-up phase) to green (ready for operation).
Legal	
Download Open Source Licenses	Downloads open source licenses as text document.

7.4 I/O Pages

7.4.1 <I/O> <Internal>

Figure 7-16: Internal I/O

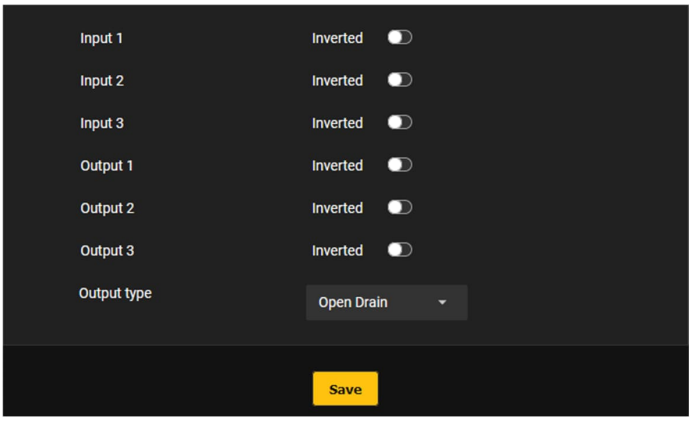

Input 1 Input 2 Input 3	Selects the logic for an input to normal or inverted.
Output 1 Output 2 Output 3	Selects the logic for an output to normal or inverted.
Output type	Toggles the output type between “Open Drain” and “Pull up”. For more details, see section 5.7.3 Digital Outputs, page 30.

원문: Fluke Process Instruments TV30 매뉴얼 · 제조사 원문 자료입니다. 사양은 제조사 사정에 따라 변경될 수 있습니다.

7.4.2 <I/O> <External>

Figure 7-17: WAGO Module

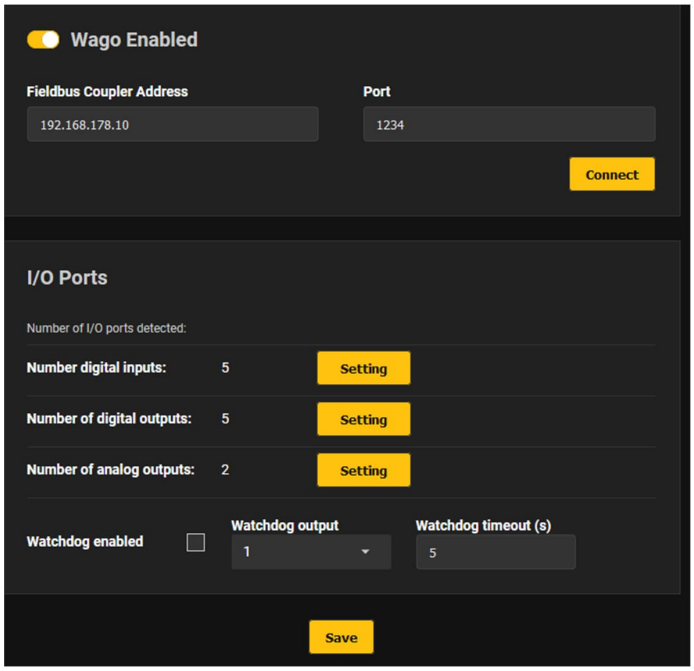

Wago Enabled	Enables the support of the camera for the Wago IO modules.
Fieldbus Coupler Address	Specifies the IP network address and the port for the fieldbus coupler. The fieldbus coupler is used to manage the WAGO IO modules, the Wago modules itself do not have individual IP addresses.
Connect	Establishes the communication between camera and Wago IO modules.
I/O Ports	
Number digital inputs	Shows the number of detected digital inputs. Pressing the Setting button opens the following dialog:

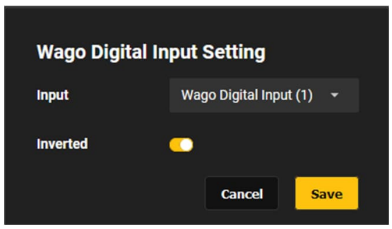

Input: selects the desired digital input

Inverted: inverts the digital data at the digital output so that 0 becomes 1 or 1 becomes 0.

원문: Fluke Process Instruments TV30 매뉴얼 · 제조사 원문 자료입니다. 사양은 제조사 사정에 따라 변경될 수 있습니다.

Number of digital outputs

Shows the number of detected digital outputs.

Pressing the Setting button opens the following dialog:

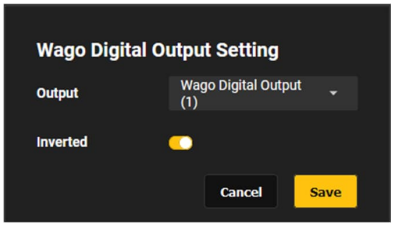

Output: selects the desired digital output

Inverted: inverts the digital data at the digital output so that 0 becomes 1 or 1 becomes 0.

Number of analog outputs

Shows the number of detected analog outputs.

Pressing the Setting button opens the following dialog:

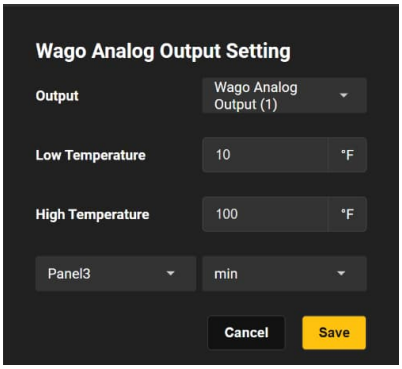

Output: selects the desired analog output.

Low Temperature: scales the analog bottom range (e.g. 4 mA) to the temperature bottom range of the camera

High Temperature: scales the analog top range (e.g. 20 mA) to the temperature top range of the camera

The output current follows value of the selectable AOI.

Watchdog enabled

In case the camera stops working (crashes, hangs, network problems), Wago modules can detect that there is no communication anymore and the Wago fieldbus coupler starts the watchdog function.

Watchdog output

Switches the selected output when the watchdog becomes active.

The output becomes active when the watchdog is active. If the connection is lost (e.g., interrupted network connection), the output is deactivated.

Watchdog timeout (s)

Defines the time after which the watchdog becomes active.

Note

For more detailed information on the WAGO modules, see the comprehensive "I/O Module System" manual!

원문: Fluke Process Instruments TV30 매뉴얼 · 제조사 원문 자료입니다. 사양은 제조사 사정에 따라 변경될 수 있습니다.

7.4.3 <I/O> <MQTT>

MQTT is a communication protocol in a server-client architecture. After the connection is established, the TV30 camera as a publisher (MQTT client) sends messages to the broker (MQTT server). A message always consists of the message content and a topic. A topic is used to classify this message in relation to other messages. The subscriber (MQTT client) can now request this topic, whereupon the broker forwards the received message to the subscriber. Subscribed topics can be used to change selected camera settings.

TV30 MQTT messages are sent with the quality of service “At most once”. That means the message is sent once and may not arrive if the connection is interrupted.

Figure 7-18: Principle of MQTT Network Protocol

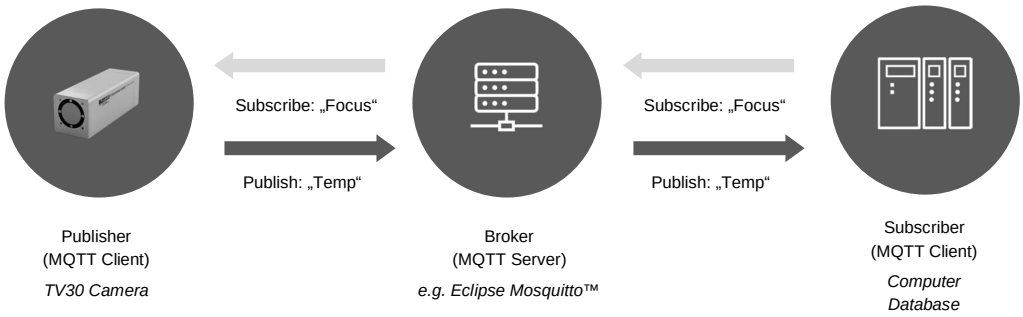

Figure 7-19: MQTT

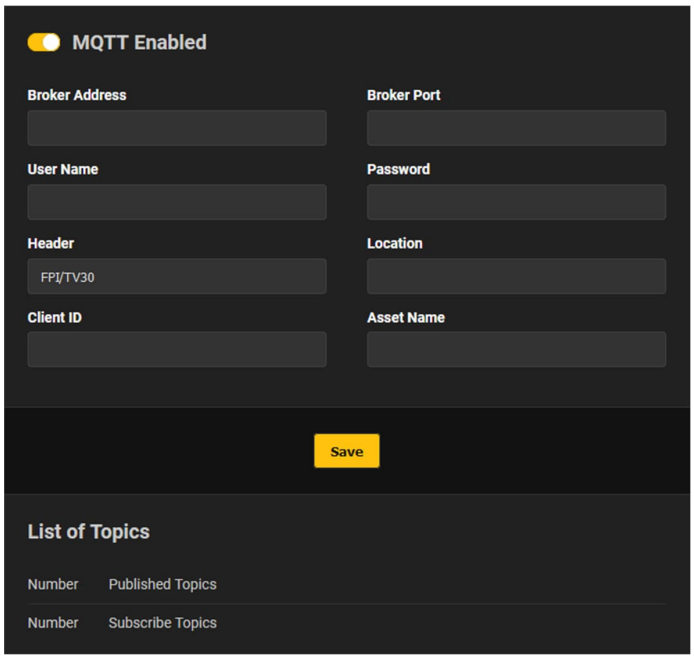

원문: Fluke Process Instruments TV30 매뉴얼 · 제조사 원문 자료입니다. 사양은 제조사 사정에 따라 변경될 수 있습니다.

MQTT Enabled	Enables the TV30 camera as publisher (MQTT client).
Broker Address	Enter the IP address of the MQTT broker to which the TV30 camera should connect as publisher.
Broker Port	Enter the communication port of the desired MQTT broker.
User Name	Provide the username for the TV30 camera authentication on the MQTT broker.
Password	Provide the password for the TV30 camera authentication on the MQTT broker.
Header	Designates the start of the topic string, e.g. FPI/TV30
Location	Optional: Provide a name for the location where the asset is being observed by the camera. When the broker is used to communicate with different devices, this can be used to filter on different locations. Sub-locations can be indicated using '/' between location and sub-location.
Client ID	The client identifier identifies the TV30 camera that connects to the MQTT broker. The ID must be unique per client and broker.
Asset Name	Optional: Provide a name for the asset that is being observed by the camera. When the broker is used to communicate with different devices, this can be used by the to filter on different assets per location.
List of Topics	Shows the list of published topics that can be used by the broker to process and a list of subscribed topics that can be used to change camera settings.

원문: Fluke Process Instruments TV30 매뉴얼 · 제조사 원문 자료입니다. 사양은 제조사 사정에 따라 변경될 수 있습니다.

we measure, we calibrate, we validate.
KOLAS 국제공인교정기관 · ISO/IEC 17025

7.4.4 <I/O> <OPC UA>

OPC UA (OPC Unified Architecture) is a standard for platform-independent data exchange for the industrial communication.

Figure 7-20: Principle of OPC UA Network

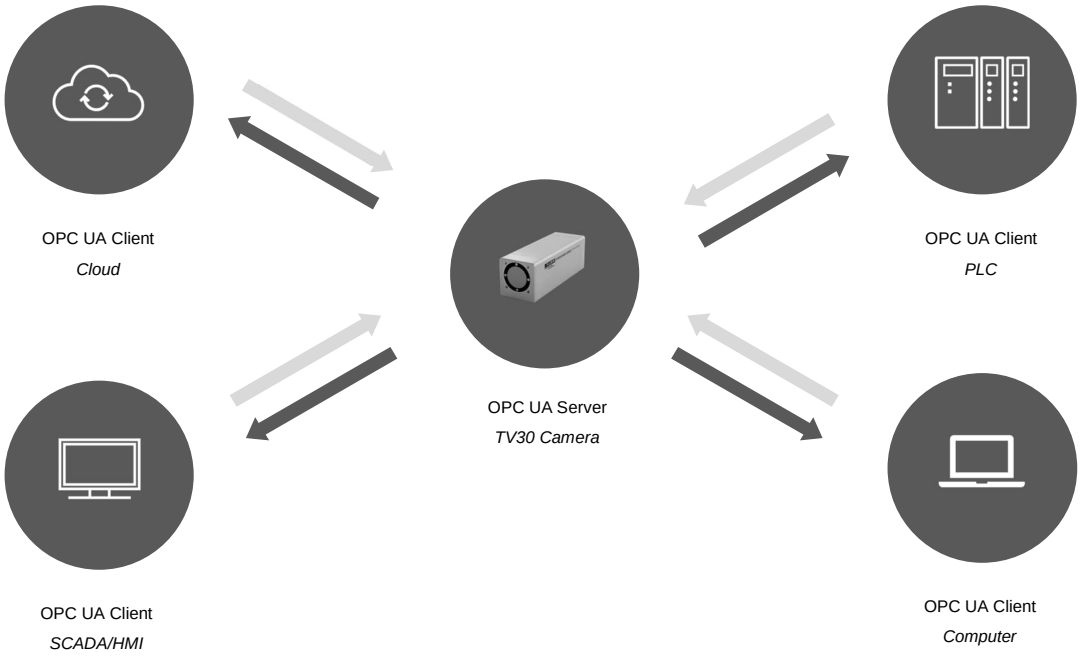

Figure 7-21: OPC UA

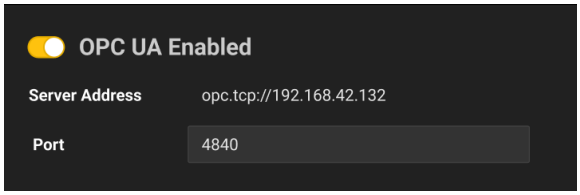

OPC UA Enabled	Enables the OPC UA server on the camera. The OPC UA server does not require any configuration.
Server Address	<Server Address> here for use with an OPC UA client. Server address can be copied but not edited. It follows the structure opc.tcp://<ip address>. Server address can be used by an OPC UA Client to communicate with the camera that acts as a OPC UA Server.
Port	Provides the port number for OPC UA clients which is typically 4840.

원문: Fluke Process Instruments TV30 매뉴얼 · 제조사 원문 자료입니다. 사양은 제조사 사정에 따라 변경될 수 있습니다.

Table 7-2: OPC UA Items

Device	Item	Access	Format	Comments
ThermoView-<name>		read		Device name. If the user does not assign a name to the camera, the serial number is used for <name>. *Example: ThermoView-59280004*
	emissivity	read/write	double	Global emissivity in the standard range 0.01 … 1
	transmissivity	read/write	double	Transmissivity in the standard range 0.01 … 1
	backgroundTemperature	read/write	double	Temperature for background temperature compensation; value within the device temperature range.
	temperatureUnit	read	string	Temperature unit
	internalTemperature	read	double	Internal device temperature
	<area of interest n>			Name of AOI
	emissivity	read/write	double	Emissivity of AOI in the standard range 0.01 … 1
	<calculation n>			Calculated value of the AOI for the selected math function (maximum, minimum, average, standard deviation)
	value	read	single	Calculated value for the AOI
	<calculation>	read	single	Result of the calculation where the AOI is involved
	<condition>	read	single	Result of the condition where the AOI is involved
	conditions			Listing of conditions and combinations
	<condition n> <combination n>	read	single	Result of the condition or combination
	calculations			
	<calculation>	read	single	Result of the calculation
	Measurement Range			
	automatic	read/write	Boolean	Automatic mode for the temperature sub-range False = off True = on
	gainMode	read	UInt32	Current temperature sub-range
	Temperature range			
	bottomRange	read	double	Bottom of temperature range
	topRange	read	double	Top of temperature range
	shutter			
	trigger	read/write	UInt32	Controls the shutter 0 = off 1 = initiates a shutter operation
	autoShutter	read/write	UInt32	Sets the automatic shutter mode 0 = off 1 = on
	focus			
	mode	read/write	UInt32	Sets the focus mode. 0 = Keeps current focus value 1 = When switching on, the device moves to the predefined position 2 = Autofocus mode. Focus initiated by autoFocusRequest = 1
	position	read/write	UInt32	Sets focus position in the range from 0 … 100
	autoFocusRequest	read/write	Int32	Starts an autofocus search once. 0 = off 1 = on
	serialNo	read	string	Serial number of the camera

원문: Fluke Process Instruments TV30 매뉴얼 · 제조사 원문 자료입니다. 사양은 제조사 사정에 따라 변경될 수 있습니다.

Device	Item	Access	Format	Comments
	deviceStatus	read	UInt32	Error status of the camera 0 = no error Bit 0: Cali param/mats error Bit 1: Mfg param error Bit 2: Parameter store error Bit 3: Engine I2C error Bit 4: Engine video open error Bit 5: Engine video data error Bit 6: Focus motor error Bit 7: HW Inputs error Bit 8: HW Outputs error Bit 9: HW LED error Bit 10: Shutter init done error Bit 11: Sensor init done error Bit 12: Sensor init error Bit 13: Sensor init in progress Bit 14: Engine status fatal Bit 15: Fieldbus error Bit 16: Init Phase Bit 20: Low free mem. warning Bit 21: High CPU load warning Bit 22: Internal temp. warning Bit 23: CPU temp. warning Bit 24: Shutter temp. warning Bit 25: Emergency Shutter
	firmwareVersion	read	string	Firmware version for the camera
	model	read	string	Designator for the camera's model, e.g. TV36-SA-L-T-60

원문: Fluke Process Instruments TV30 매뉴얼 · 제조사 원문 자료입니다. 사양은 제조사 사정에 따라 변경될 수 있습니다.

8 Accessories

A full range of accessories for various applications and industrial environments are available. Accessories include items, that may be ordered at any time and added on-site.

8.1 Electrical Accessories

The following electrical accessories are available:

- Ethernet PoE Cable (A-CB-xx-M12-W08-xx)
- 12-Wire Cable, High Temp (A-CB-HT-M16-W12-xx)
- 12-Wire Cable, Low Temp (A-CB-LT-M16-W12-xx)
- Terminal Block (A-TV30-TB)
- Ethernet Cable (A-CB-LT-RJ45-xx)
- Fiber Optic Cable (A-CB-FO-xxx)
- PoE Injector (A-TV-POE1)
- PoE Injector Industrial (A-TV-POE2)
- Power Supply DIN Rail (A-PS-DIN-24V)
- Fiber Optic to Ethernet Converter (A-CON-FO-RJ45)
- Ethernet Switch (A-CON-SW)
- I/O Modules

원문: Fluke Process Instruments TV30 매뉴얼 · 제조사 원문 자료입니다. 사양은 제조사 사정에 따라 변경될 수 있습니다.

TS-TL-FPI-053

we measure, we calibrate, we validate.
KOLAS 국제공인교정기관 · ISO/IEC 17025
㈜테솔 · www.tessol.com TS-TL-FPI-053 56 / 95

8.1.1 Ethernet PoE Cable (A-CB-xx-M12-W08-xx)

The Ethernet PoE cable comes with an eight-pin male M12 connector, assigned to the cameras rear eight-socket female M12 connector. The corresponding end of the Ethernet PoE cable is equipped with a general RJ45 snap-in connector. The cable is about 7 mm (0.3 in) in outer diameter.

The LT version of the cable withstands ambient temperatures up to 80°C (176°F), the HT version withstands ambient temperatures up to 165°C (329°F).

In case of using PoE (Power over Ethernet) to supply the imager with power, the needed power is injected over the existing data wires.

For information about installation, see section 5.6.1 Ethernet Connector, page 28.

Figure 8-1: Exemplary Ethernet PoE LT Cable

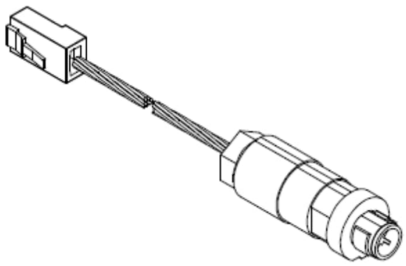

Figure 8-2: Pin Assignment (Front View)

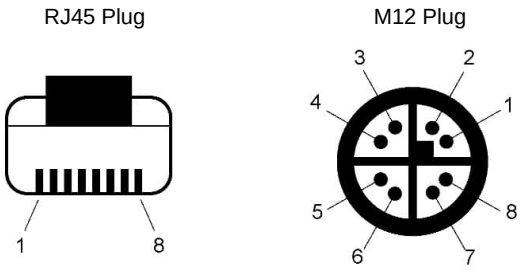

Table 8-3: Available Ethernet PoE Cables

P/N	Length	Ambient Temperature
A-CB-LT-M12-W08-07	7.5 m (25 ft)	80°C (176°F)
A-CB-LT-M12-W08-25	25 m (82 ft)	80°C (176°F)
A-CB-LT-M12-W08-50	50 m (164 ft)	80°C (176°F)
A-CB-HT-M12-W08-07	7.5 m (25 ft)	165°C (329°F)
A-CB-HT-M12-W08-10	10 m (33 ft)	165°C (329°F)

원문: Fluke Process Instruments TV30 매뉴얼 · 제조사 원문 자료입니다. 사양은 제조사 사정에 따라 변경될 수 있습니다.

8.1.2 12-Wire Cable, High Temp (A-CB-HT-M16-W12-xx)

Use the High Temp 12-wire cable for the camera to support power supply and all inputs and outputs. The cable described below is a shielded 12-conductor cable, made of two twisted pairs plus 8 separate wires, all as tinned copper braid. The cable is equipped with a M16 DIN connector on one side and wire sleeves at the counter side. The outer diameter of the cable is 7 mm (0.28 in).

The cable withstands ambient temperatures up to 200°C (392°F) and is Teflon coated. Teflon coated temperature cables have good to excellent resistance to oxidation, heat, weather, sun, ozone, flame, water, acid, alkalis, and alcohol, but poor resistance to gasoline, kerosene, and degreaser solvents.

Figure 8-3: 12-Wire Cable, High Temp Version

Table 8-4: Cable Specification

P/N	Ambient Temperature	Length
A-CB-HT-M16-W12-04	-80 to 200°C (-112°F to 392°F)	4 m (13 ft)
A-CB-HT-M16-W12-08	-80 to 200°C (-112°F to 392°F)	8 m (26 ft)
A-CB-HT-M16-W12-15	-80 to 200°C (-112°F to 392°F)	15 m (49 ft)
A-CB-HT-M16-W12-30	-80 to 200°C (-112°F to 392°F)	30 m (98 ft)
A-CB-HT-M16-W12-60	-80 to 200°C (-112°F to 392°F)	60 m (197 ft)

Color	Number	Cross Section	Shield
black/red	2 wires	0.33 mm² (AWG 22)	none
black/white	1 twisted pair	0.22 mm² (AWG 24)	yes
purple/gray	1 twisted pair	0.22 mm² (AWG 24)	yes
green/brown/blue/orange/yellow/clear	6 wires	0.22 mm² (AWG 24)	none

Table 8-5: Color Assignment to DIN Connector

Color	Connector Pin	Description
Red	M	+ 24 VDC
Black	L	GND Power
Purple	D	Input 1
Yellow	F	Input 2
White	B	Input 3
Gray	C	GND Input
Green	J	Output 1
Blue	H	Output 2
Orange	G	Output 3
Brown	K	GND Output
Black	A	NC
Clear	E	Shield

원문: Fluke Process Instruments TV30 매뉴얼 · 제조사 원문 자료입니다. 사양은 제조사 사정에 따라 변경될 수 있습니다.

Risk of Personal Injury

Teflon develops poisonous gasses when it is exposed to flames!

Note
An ordered cable does not include a terminal block!

Note
If you cut the cable to shorten it, notice that both sets of twisted-pair wires have drain wires inside their insulation. These drain wires (and the white wire that is not part of the twisted pair) must be connected to the terminal labeled CLEAR.

Note
If you purchase your own cable, use wire with the same specifications as herein mentioned.

원문: Fluke Process Instruments TV30 매뉴얼 · 제조사 원문 자료입니다. 사양은 제조사 사정에 따라 변경될 수 있습니다.

8.1.3 12-Wire Cable, Low Temp (A-CB-LT-M16-W12-xx)

Use the Low Temp 12-wire cable for the sensor to support power supply, all inputs, outputs, and the RS485 interface. The cable described below is a shielded 12-conductor cable, made of two twisted pairs plus 8 separate wires, all as tinned copper braid. The cable is equipped with a M16 DIN connector on one side and wire sleeves at the counter side. The outer diameter of the cable is 7.2 mm (0.28 in).

The cable withstands ambient temperatures up to 105°C (221°F) and is PUR (Polyurethane PUR- 11Y, Halogen free, Silicone free) coated. PUR coated cables are flexible and have good to excellent resistance to against oil, bases, and acids.

Figure 8-4: 12-Wire Cable, Low Temp Version

Table 8-6: Cable Specification

P/N	Ambient Temperature	Length
A-CB-LT-M16-W12-04	-40 to 105°C (-40 to 221°F)	4 m (13 ft)
A-CB-LT-M16-W12-08	-40 to 105°C (-40 to 221°F)	8 m (26 ft)
A-CB-LT-M16-W12-15	-40 to 105°C (-40 to 221°F)	15 m (49 ft)
A-CB-LT-M16-W12-30	-40 to 105°C (-40 to 221°F)	30 m (98 ft)
A-CB-LT-M16-W12-60	-40 to 105°C (-40 to 221°F)	60 m (197 ft)

Color	Number	Cross Section	Shield
black/red	2 wires	0.33 mm² (AWG 22)	none
black/white	1 twisted pair	0.22 mm² (AWG 24)	yes
purple/gray	1 twisted pair	0.22 mm² (AWG 24)	yes
green/brown/blue/orange/yellow/clear	6 wires	0.22 mm² (AWG 24)	none

Table 8-7: Color Assignment to DIN Connector

Color	Connector Pin	Description
Red	M	+ 24 VDC
Black	L	GND Power
Purple	D	Input 1
Yellow	F	Input 2
White	B	Input 3
Gray	C	GND Input
Green	J	Output 1
Blue	H	Output 2
Orange	G	Output 3
Brown	K	GND Output
Black	A	NC
Clear	E	Shield

원문: Fluke Process Instruments TV30 매뉴얼 · 제조사 원문 자료입니다. 사양은 제조사 사정에 따라 변경될 수 있습니다.

Risk of Personal Injury

Polyurethane may cause allergy and possibly cancer!

Note
An ordered cable does not include a terminal block!

Note
If you cut the cable to shorten it, notice that both sets of twisted-pair wires have drain wires inside their insulation. These drain wires (and the white wire that is not part of the twisted pair) must be connected to the terminal labeled CLEAR.

Note
If you purchase your own cable, use wire with the same specifications as herein mentioned.

원문: Fluke Process Instruments TV30 매뉴얼 · 제조사 원문 자료입니다. 사양은 제조사 사정에 따라 변경될 수 있습니다.

8.1.4 Terminal Block (A-TV30-TB)

The terminal block accessory is for the connection of the sensor to the customer's industrial environment. It lists all different conductor colors on one side and the related signal names on the other side.

Figure 8-5: Terminal Block with Wire Color Assignment

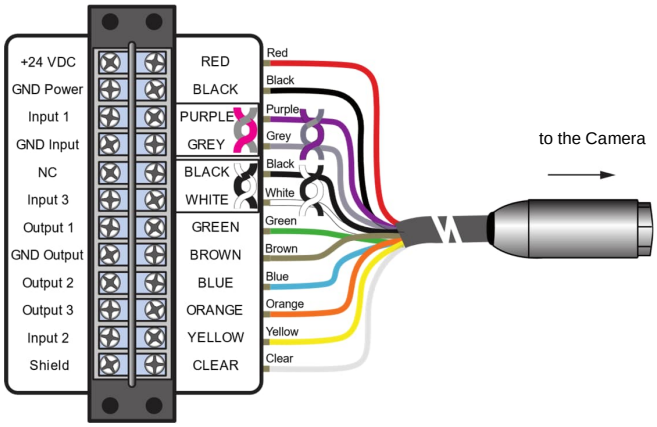

원문: Fluke Process Instruments TV30 매뉴얼 · 제조사 원문 자료입니다. 사양은 제조사 사정에 따라 변경될 수 있습니다.

8.1.5 Ethernet Cable (A-CB-LT-RJ45-xx)

The Ethernet cable comes with RJ45 connectors on both ends.

Figure 8-6: Ethernet Cable

Table 8-8: Ethernet Cables – Available Lengths

P/N	Length
A-CB-LT-RJ45-03	0.3 m (1 ft)
A-CB-LT-RJ45-25	25 m (82 ft)

원문: Fluke Process Instruments TV30 매뉴얼 · 제조사 원문 자료입니다. 사양은 제조사 사정에 따라 변경될 수 있습니다.

8.1.6 Fiber Optic Cable (A-CB-FO-xxx)

Use fiber optic communication for Ethernet cable runs beyond 90 m (295 ft). The cables are available in the following lengths:

- 150 m (492 ft), part number A-CB-FO-150
- 300 m (984 ft), part number A-CB-FO-300

Specification

Connector	SC
Application	outdoor
Armoring	armoring plus PE protective sheath
Cable type	multimode (graded index)
Fiber core	50 µm
Cladding	125 µm

원문: Fluke Process Instruments TV30 매뉴얼 · 제조사 원문 자료입니다. 사양은 제조사 사정에 따라 변경될 수 있습니다.

8.1.7 PoE Injector (A-TV-POE1)

The PoE Injector (A-TV-POE1) is intended to use in office environments.

With PoE (Power over Ethernet), the injector transfers both data and electrical power to Ethernet-enabled devices using a standard CAT5 cable. The injector injects up to 30 W for the attached device(s). It operates at an ambient temperature up to 55ºC (131°F).

Figure 8-7: PoE Injector for Office Environments

[1]

Specification:

- Single-port Gigabit PoE Midspan, 802.3at compliant with 2-event classification
- Backwards compatible with IEEE802.3af
- 30 W output power from ambient -20 to +40ºC (-4 to 104°F), 25 W output at +55ºC (131°F)
- 1000 Base-T compatible
- Safe & reliable power over existing Ethernet infrastructure
- Automatic detection and protection of non-standard devices
- Plug-and-play installation
- AC Input Voltage 100 to 240 VAC (50 to 60 Hz)
- Indicator: AC power (yellow), Channel power (green)

[1] Copyright Microsemi®

원문: Fluke Process Instruments TV30 매뉴얼 · 제조사 원문 자료입니다. 사양은 제조사 사정에 따라 변경될 수 있습니다.

8.1.8 PoE Injector Industrial (A-TV-POE2)

The PoE Injector Industrial (A-TV-POE2) is intended to use in industrial environments.

With PoE (Power over Ethernet), the injector transfers both data and electrical power to Ethernet-enabled devices using a standard CAT5 cable. The injector injects up to 30 W for the attached device(s). It operates in a wide temperature range between up to 75°C (167°F). The injector is DIN-rail or wall mountable.

Communications

Standard	IEEE 802.3, 802.3u, 802.3x, 802.3af/at, 802.3ab
LAN	10/100/1000Base-T (X)
Transmission Distance	max. 100 m (328 ft)
Transmission Speed	up to 1000 Mbps

Interface

Connectors	PoE OUT: RJ45, DATA IN: RJ45 6-pin removable screw terminal

Power

Power Consumption	max. 33.36 W @ 24 VDC (Full load PoE)
Power Input	24 to 48 VDC, redundant dual power inputs
Power Output	30 W @ 55 VDC

Environment

Operating Temperature	-40 to 75°C (-40 to 167°F)
Storage Temperature	-40 to 85°C (-40 to 185°F)
Operating Humidity	5 to 95% (non-condensing)
Storage Humidity	0 to 95% (non-condensing)

원문: Fluke Process Instruments TV30 매뉴얼 · 제조사 원문 자료입니다. 사양은 제조사 사정에 따라 변경될 수 있습니다.

8.1.9 Power Supply DIN Rail (A-PS-DIN-24V)

The DIN-rail mount industrial power supply delivers isolated dc power and provides short circuit and overload protection.

Risk of Personal Injury

To prevent electrical shocks, the power supply must be used in protected environments (cabinets)!

Technical data:

Protection class	prepared for class II equipment
Environmental protection	IP20
Operating temperature range	-25°C to 55°C (-13°F to 131°F)
AC Input	100 – 240 VAC 44/66 Hz
DC Output	24 VDC / 1.3 A
Cross sections	input/output 0.08 to 2.5 mm² (AWG 28 to 12)

Figure 8-8: Industrial Power Supply

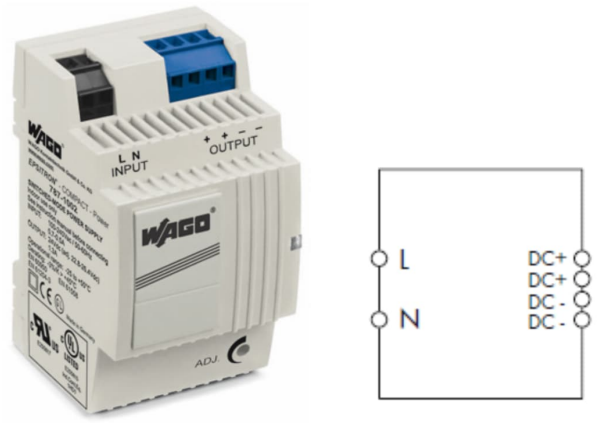

[1]

[1] Copyright Wago®

8.1.10 Fiber Optic to Ethernet Converter (A-CON-FO-RJ45)

The Fiber Optic Converter (A-CON-FO-RJ45) is an industrial Ethernet switch with 6 RJ45 GBit Ethernet ports and 2 multi-mode GBit fiber optic ports. The converter is DIN-rail or wall mountable.

Communications	
Standard	IEEE 802.3, 802.3u, 802.3ab, 802.3x, IEEE 802.3z
LAN	10/100/1000Base-T (X), 1000Base-SX or 1000Base-LX
Transmission Distance	Ethernet: max. 100 m (328 ft) Multi-mode: up to 550 m (1804 ft)
Transmission Speed	up to 1000 Mbps
Optical Fiber	
Multi-mode	wavelength: 850 nm
	parameters: 50/125 µm, 62.5/125 µm
Interface	
Connectors	6 x RJ45 ports, 2 x SC type fiber optic
	6-pin removable screw terminal (power & relay)
Power	
Power Consumption	7 W
Power Input	12 to 48 VDC, 24 VAC (18 to 30 VAC), redundant dual inputs
Environment	
Operating Temperature	-40 to 75°C (-40 to 167°F)
Storage Temperature	-40 to 85°C (-40 to 185°F)
Operating Humidity	10 to 95% (non-condensing)
Storage Humidity	10 to 95% (non-condensing)

원문: Fluke Process Instruments TV30 매뉴얼 · 제조사 원문 자료입니다. 사양은 제조사 사정에 따라 변경될 수 있습니다.

8.1.11 Ethernet Switch (A-CON-SW)

The Ethernet Switch (A-CON-SW) has 4 x 10/100/1000BASE-T Ethernet ports with PoE+ functionality and 2 x SFP sockets. It works within a wide operating temperature range. This switch can provide 30 W output per PoE port. The switch is DIN-rail or wall mountable.

Communications	
Standard	IEEE 802.3, 802.3u, 802.3x, 802.3af/at, 802.3ab, 802.3z
LAN	10/100/1000BASE-T 1000BASE-SX/LX/LHX/XD/ZX/EZX
Transmission Distance	Ethernet: max. 100 m (328 ft) SFP: up to 110 km (depends on SFP)
Transmission Speed	Copper: 10/100/1000 Mbps, Auto-Negotiation Gigabit Fiber: Up to 1000 Mbps
Interface	
Connectors	4x ports, 10/100/1000T(X), RJ-45 2x ports, SFP: Gigabit Base
Power	
Power Consumption	5.5 W @ 48 VDC (Ethernet only)
Power Input	48 VDC (44 VDC to 57 VDC), redundant dual inputs
Fault Output	1 Relay Output
Environment	
Operating Temperature	-40 to 75°C (-40 to 167°F)
Storage Temperature	-40 to 85°C (-40 to 185°F)
Operating Humidity	5 to 95% (non-condensing)

원문: Fluke Process Instruments TV30 매뉴얼 · 제조사 원문 자료입니다. 사양은 제조사 사정에 따라 변경될 수 있습니다.

8.1.12 I/O Modules

The following I/O modules are available for the TV30 imager:

- Basic Kit (A-IO-BASICKIT), contains:
  Fieldbus Coupler 750-362, Supply Module 750-602, End Module 750-600
- Digital Input Module 750-1406, 16 channels (A-IO-16DI)
- Digital Output Module 750-1504, 16 channels (A-IO-16DO)
- Analog Current Output Module 750-563, preset to 4 – 20 mA, 2 channels (A-IO-2AOC-4)
- Relay Output Module 750-517, change over, 2 channels (A-IO-2R-CO)
- Passive Isolator 857-452 (A-IO-2A-ISO)

I/O accessories need to be configured and installed by the user. The powering of the camera requires the power supply A-PS-DIN-24V unless customer supplies power to camera separately.

For more detailed information, see the manual „I/O Module System for Infrared and Sonic Measurement Systems".

원문: Fluke Process Instruments TV30 매뉴얼 · 제조사 원문 자료입니다. 사양은 제조사 사정에 따라 변경될 수 있습니다.

8.2 Mechanical Accessories

The following mechanical accessories are available:

- Mounting Base (A-TV30-MB)
- Air Purge Collar (A-TV30-AP)
- Water Cooling Enclosure (A-TV30-AP-WC)
- Outdoor Enclosure (A-TV-ENCVW)
- Swivel Bracket (A-BR-S)
- Protective Windows (S-TV30-PW)

원문: Fluke Process Instruments TV30 매뉴얼 · 제조사 원문 자료입니다. 사양은 제조사 사정에 따라 변경될 수 있습니다.

8.2.1 Mounting Base (A-TV30-MB)

The mounting base is to adapt the imager in an easy way to any kind of fixture. For the fixture to tripods or swivel brackets, the mounting base provides two standard ¼-20 UNC holes.

Figure 8-9: Mounting Base

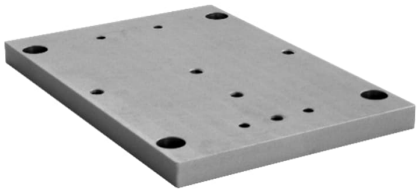

Figure 8-10: Mounting Base Dimensions

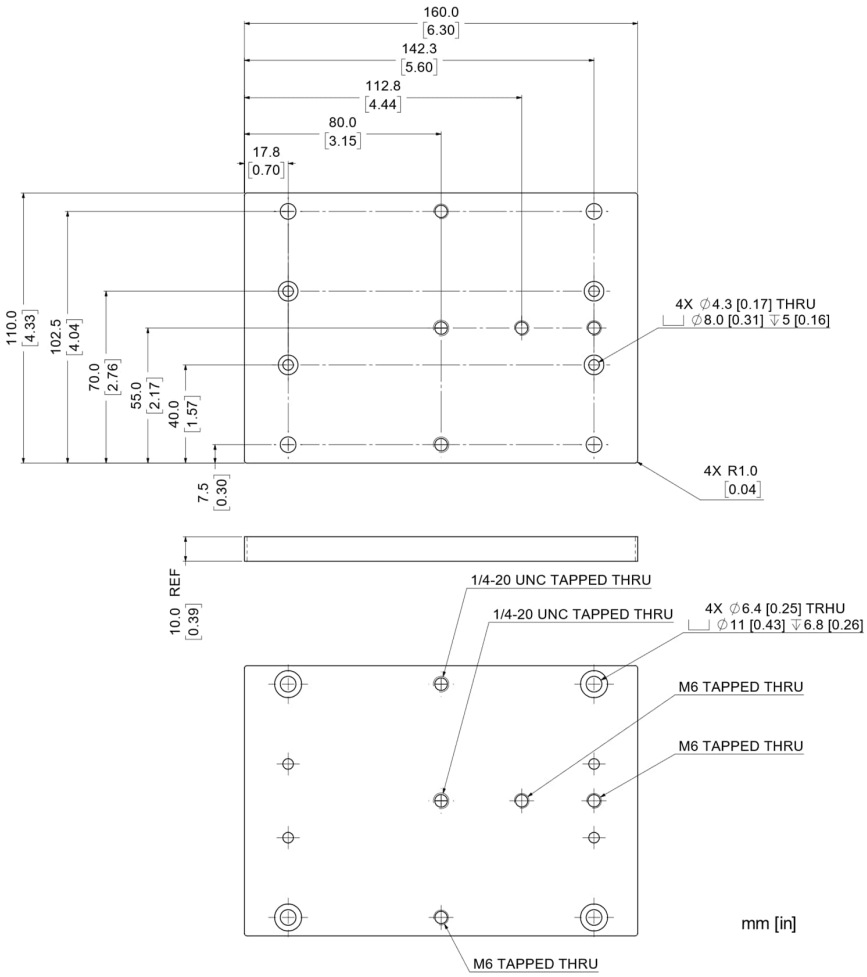

원문: Fluke Process Instruments TV30 매뉴얼 · 제조사 원문 자료입니다. 사양은 제조사 사정에 따라 변경될 수 있습니다.

Figure 8-11: Assembling the Mounting Base

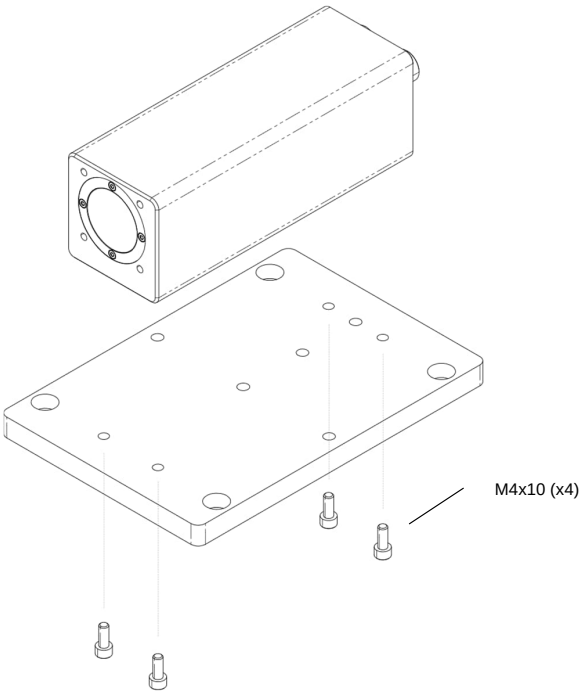

Figure 8-12: Camera with Mounting Base

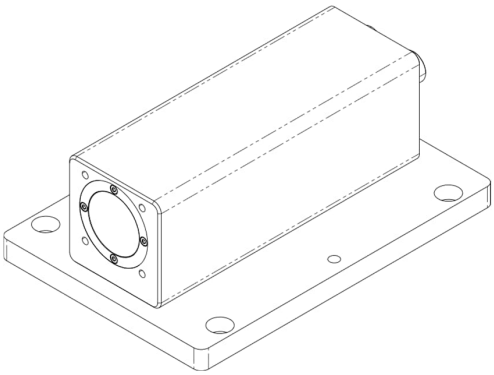

원문: Fluke Process Instruments TV30 매뉴얼 · 제조사 원문 자료입니다. 사양은 제조사 사정에 따라 변경될 수 있습니다.

8.2.2 Air Purge Collar (A-TV30-AP)

The air purge collar is used to keep dust, moisture, airborne particles, and vapors away from the lens. Air flows into the 1/8" NPT fitting and out the front aperture. Clean filtered (or "instrument") air is recommended to avoid contaminants from settling on the lens. Do not use chilled air below 10°C (50°F).

Air flow rate	30 to 60 l / min (8 to 16 gallon / minute)
Air pressure	max. 5 bar (72.5 psi)
Air quality	recommended according to ISO8573-1: class 2 or better for solid particulate class 4 or better for water class 2 or better for oil

Figure 8-13: Air Purge Collar

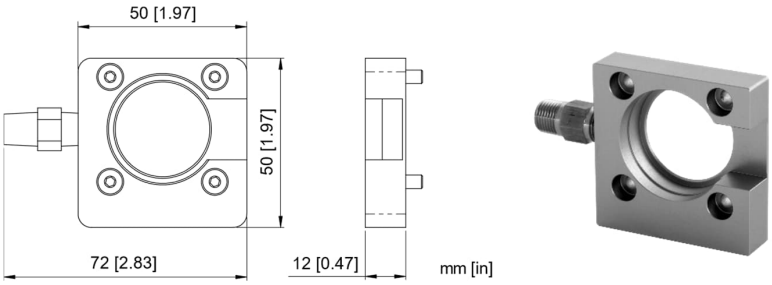

To install the air purge collar, secure the air purge collar on the camera with the screws as shown in the figure below.

Figure 8-14: Assembling the Air Purge Collar

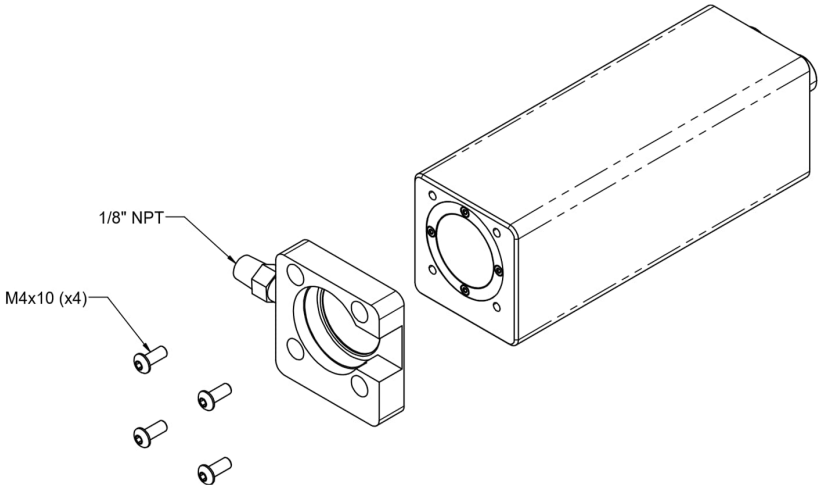

Figure 8-15: Camera with Air Purge Collar and Mounting Base

원문: Fluke Process Instruments TV30 매뉴얼 · 제조사 원문 자료입니다. 사양은 제조사 사정에 따라 변경될 수 있습니다.

8.2.3 Water Cooling Enclosure (A-TV30-AP-WC)

The water cooling enclosure allows the camera to be used in high ambient temperatures with water cooling. Water is supplied at the inlet IN, circulates in the housing walls, cools the unit, and exits at the outlet OUT. The connections are given via 1/8” NPT fittings.

Max. ambient temperature	180°C (356°F) at a flow rate of 2 l / min (0.5 gallon / minute) and a water inlet temperature of 20°C (68°F) Chilled water below 10°C (50°F) is not recommended.

The water cooling enclosure comes with an air purge collar. The air purge should be always used to keep the lens dry.

Air flow rate	30 to 60 l / min (8 to 16 gallon / minute)
Air pressure	max. 5 bar (72.5 psi)
Air quality	recommended according to ISO8573-1: class 2 or better for solid particulate class 4 or better for water class 2 or better for oil

Figure 8-16: Water Cooling Enclosure with Air Purge

Figure 8-17: Enclosure Connections

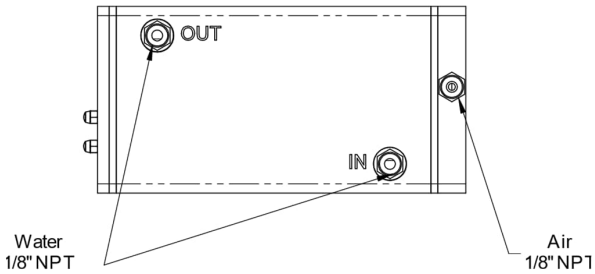

Figure 8-18: Enclosure Dimensions

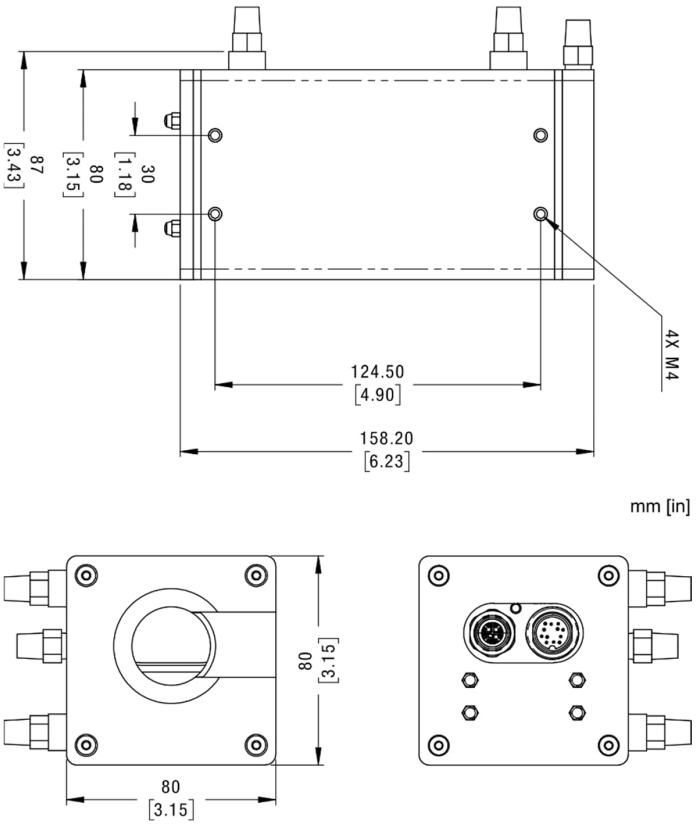

원문: Fluke Process Instruments TV30 매뉴얼 · 제조사 원문 자료입니다. 사양은 제조사 사정에 따라 변경될 수 있습니다.

8.2.3.1 Assembling

Remove the M4x6 screws (x4) to detach the back plate.

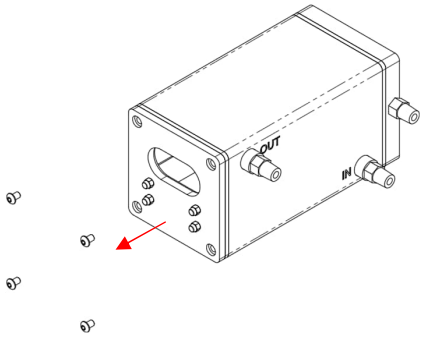

Remove the back plate. The tray attached to the back plate does not need to be taken apart.

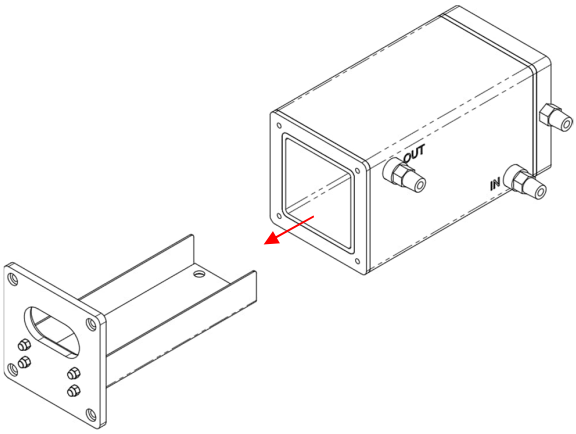

Insert the imager in the tray and secure it with the screws M4x10 (x4) from below.

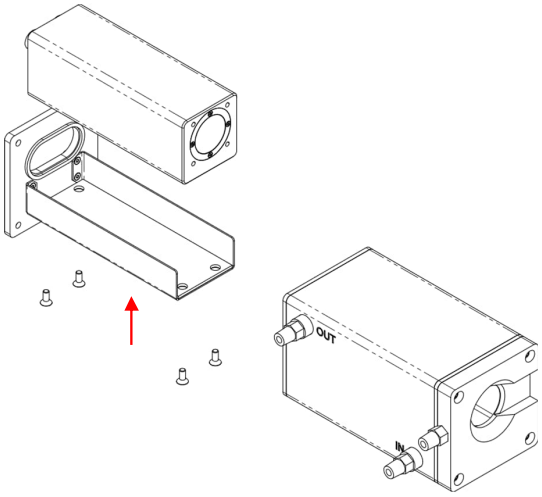

원문: Fluke Process Instruments TV30 매뉴얼 · 제조사 원문 자료입니다. 사양은 제조사 사정에 따라 변경될 수 있습니다.

Slide the assembled into the enclosure.

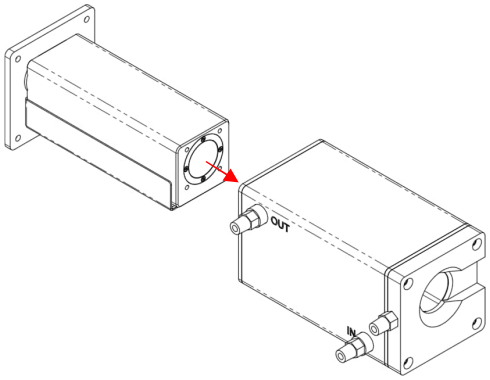

Use the M4x6 screws (x4) to close the enclosure.

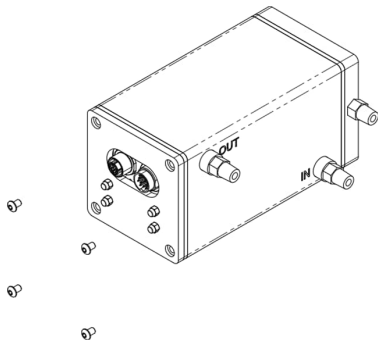

If required, the water cooling enclosure can also be combined with the mounting base with screws M4x10 (x4), see section 8.2.1 Mounting Base (A-TV30-MB), page 72.

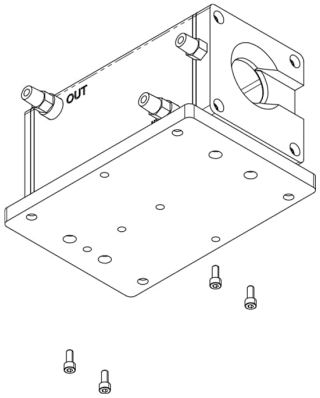

원문: Fluke Process Instruments TV30 매뉴얼 · 제조사 원문 자료입니다. 사양은 제조사 사정에 따라 변경될 수 있습니다.

8.2.4 Outdoor Enclosure (A-TV-ENCVW)

In case, the thermal imager must be mounted in outdoor environments, an outdoor enclosure ensures weatherproofed installations. It provides a high protection rate, a sunshield, and a temperature-controlled heater for cooler environments.

Figure 8-19: Outdoor Enclosure[1]

8.2.4.1 Specification

Scope of delivery

- Enclosure with sunshield and Germanium window
- Double thermostat control heater
- Spacer plate for TV30 camera
- Cable glands

Environment

Rating	IP66/IP67 EN60529 with cable glands
Ambient temperature	-30 to 50°C (-22 to 122°F)

Electrical

Double heater	115 / 230 VAC, 80 W

Mechanical

Construction	Aluminum
Weight	4.1 kg (9 lb), without thermal camera
Cable entry	M16x1.5

[1] Photo © 2009, Videotec S.p.A.

원문: Fluke Process Instruments TV30 매뉴얼 · 제조사 원문 자료입니다. 사양은 제조사 사정에 따라 변경될 수 있습니다.

Figure 8-20: Dimensions

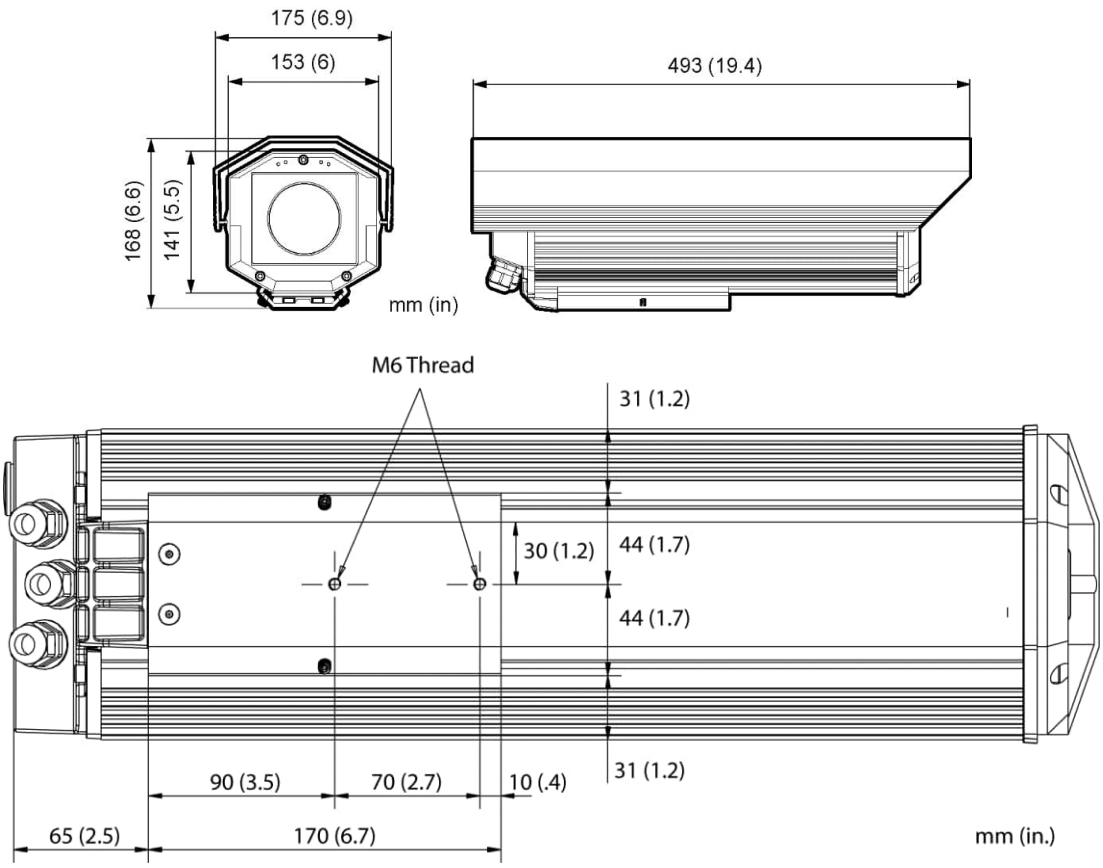

8.2.4.2 Installation

Note
To avoid erroneous readings, ensure that the transmission of 0.87 for the built-in protective window (Germanium) must be set in the thermal imager!

Note
For installation / commissioning of the internal heating element be referred to the enclosed instructions of the manufacturer.

When delivered, the housing cover is not yet in its final position.

원문: Fluke Process Instruments TV30 매뉴얼 · 제조사 원문 자료입니다. 사양은 제조사 사정에 따라 변경될 수 있습니다.

Push the housing cover upwards until the key on the housing cover snaps into the slot of the housing body.

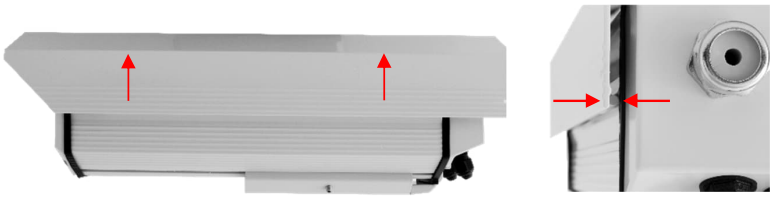

Remove the three hexagon socket screws on the back of the housing. Remove the rear lid with its inner sliding carriage.

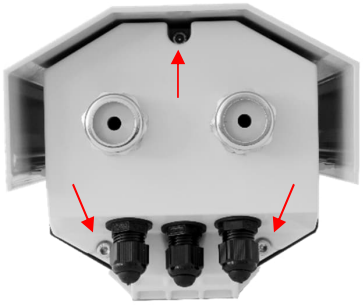

Attach the camera to the spacer plate using the provided screws.

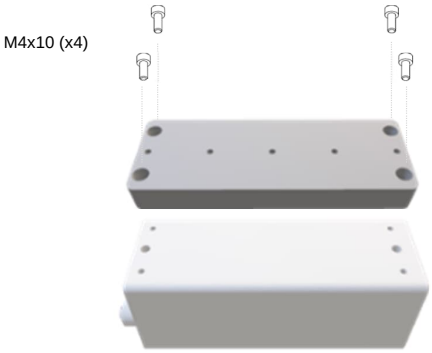

Secure the camera with inner ring and pan head screw to the rail. Use the delivered hex wrench.

Note the given distance between the camera front and the rail.

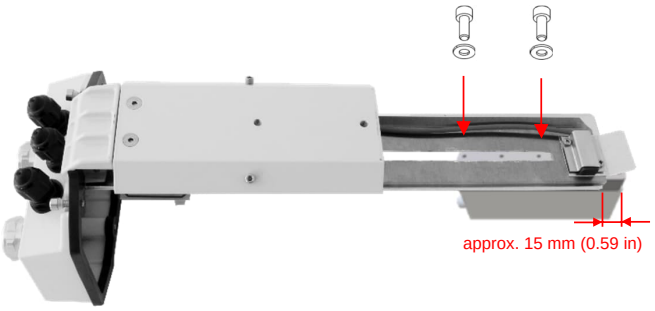

원문: Fluke Process Instruments TV30 매뉴얼 · 제조사 원문 자료입니다. 사양은 제조사 사정에 따라 변경될 수 있습니다.

Mount the sealing inner and the end cap to each cable.

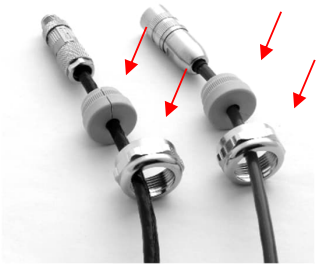

Pass all cables through the enclosure cable glands. Plug the connectors to the camera. Tight the end caps.

Installation with PoE requires only one cable. Close the unused cable gland with the enclosed sealing body.

Move the sliding carriage into the inner of the housing. Consider the rail system.

Connect the protective inductor on the labelled tag in the inner of the housing inner side.

원문: Fluke Process Instruments TV30 매뉴얼 · 제조사 원문 자료입니다. 사양은 제조사 사정에 따라 변경될 수 있습니다.

Remount the rear lid onto the enclosure.

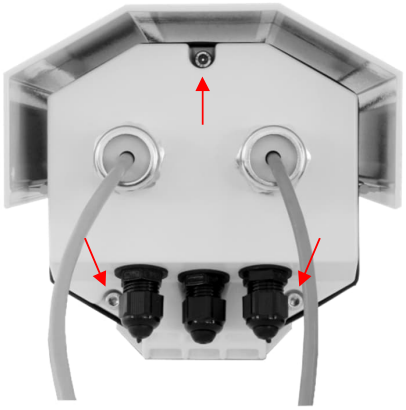

원문: Fluke Process Instruments TV30 매뉴얼 · 제조사 원문 자료입니다. 사양은 제조사 사정에 따라 변경될 수 있습니다.

8.2.5 Swivel Bracket (A-BR-S)

The swivel bracket is to mount the camera in a moveable position, to correct in an easy way the pitch and yaw orientation. For a correct imager orientation, you can pitch (0° – 90°) and swivel (0° - 360°) the imager sighting axis. The base has a single control knob and a split-ball lock, to hold the specific head mount firmly in place.

Specification:

Circle diameter for three countersunk bolts	109.5 mm (4.3 in)
Countersunk bolts	6.3 mm (1/4") flat-head screws (not included)
Height with head mount beam	120 mm (4.7 in)
Weight with head mount beam	1.07 kg (2.4 lb)

Figure 8-21: Swivel Bracket with Mount Beam

The mounting base A-TV-MB is required for the use of the swivel bracket. For this, the camera must first be fixed on the mounting base as shown in Figure 8-11. Then the assembled can be attached on the mount beam of the swivel bracket as shown below.

Figure 8-22: Mounting Base to be fixed to the Mount Beam of Swivel Bracket

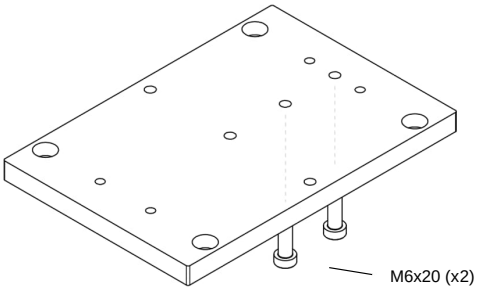

원문: Fluke Process Instruments TV30 매뉴얼 · 제조사 원문 자료입니다. 사양은 제조사 사정에 따라 변경될 수 있습니다.

Figure 8-23: Camera with Swivel Bracket

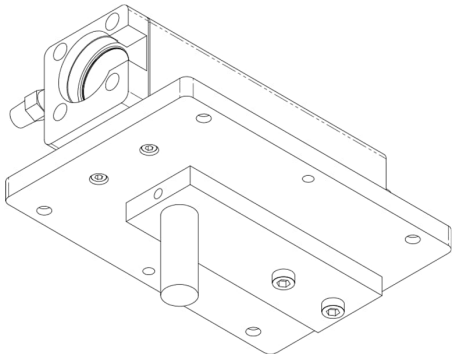

원문: Fluke Process Instruments TV30 매뉴얼 · 제조사 원문 자료입니다. 사양은 제조사 사정에 따라 변경될 수 있습니다.

8.2.6 Protective Windows (S-TV30-PW)

The protective window protects the camera's inner parts against dust and other contamination. The window is integrated directly into the front end of the camera. It is available as spare part.

Figure 8-24: Protective Window

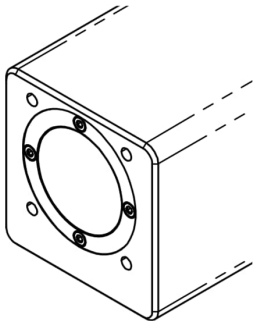

원문: Fluke Process Instruments TV30 매뉴얼 · 제조사 원문 자료입니다. 사양은 제조사 사정에 따라 변경될 수 있습니다.

9 Maintenance

Our sales representatives and customer service staff are always at your disposal for questions regarding applications, calibration, repair, and solutions to specific problems. Please contact your local sales representative if you need assistance. In many cases, problems can be solved over the telephone. If you need to return equipment for servicing, calibration or repair, please contact our Service Department before shipping. Phone numbers are listed at the beginning of this document.

9.1 Fail-Safe Operation

In cooperation with I/O capabilities , the camera provides a fail-safe system. That system is designed to alert the operator and provide a safe output in case of certain system failures.

The following system failures cause a fail-safe operation:

- Power supply is lost or out of range
- Internal temperature of the camera is out of range
- Firmware has crashed

When an error or failure does occur, all internal outputs of the camera adjust to a tristate level. A tristate level means that the output signal is neither logically 0 nor 1, but high impedance. Such a signal makes the camera behave as if its output is temporarily disconnected from the surrounding circuits.

Warning

The Fail-Safe circuit should never be relied on exclusively to protect critical processes. Other safety devices should also be used to supplement this function!

For automatic fail-safe monitoring, the user can make the following implementation:

- Electrically consider an Open-Drain implementation for the internal digital outputs of the camera, see section 5.7.3 Digital Outputs, page 30
- Define a measurement condition that is always false and assign one internal digital output to that measurement condition, see section 7.2.2 <Camera> <Conditions>, page 38.
  Note: The considered output must be exclusive, that means no other condition can switch this output.
- Make sure that the considered output is non-inverted. Switch the output type to <Open Drain>, see section 7.4.1 <I/O> <Internal>, page 48.
- The considered output is now always on low signal as long as no fail-safe occurs. In case of a fail-safe the output goes to tri-state and the Open Drain implementation provides a high signal. This behavior can be permanently monitored by an external control system to indicate a fail-safe condition.

원문: Fluke Process Instruments TV30 매뉴얼 · 제조사 원문 자료입니다. 사양은 제조사 사정에 따라 변경될 수 있습니다.

9.2 Troubleshooting

Table 9-9: Troubleshooting

Symptom	Probable cause	Remedy
Power does not turn on.	Power switch is not on.	Turn on the Power Switch.
	AC adapter is not connected.	Connect AC adapter.
Measuring temperature is in error. (out of the specifications)	Wrong emissivity is set	Set correct emissivity.
	Ambient reflection calibration is not made	Execute ambient reflection calibration
	Focus is not met	Adjust focus correctly.
Noise problem	High voltage source is nearby.	Take a distance from the high voltage source.
	Connectors or cable touches to any noise source.	Turn off the power and take a distance from the noise source.

원문: Fluke Process Instruments TV30 매뉴얼 · 제조사 원문 자료입니다. 사양은 제조사 사정에 따라 변경될 수 있습니다.

9.3 Cleaning the Window

Always keep the window clean. Care should be taken when cleaning the window. To clean the window, do the following:

1. Lightly blow off loose particles with “canned” air (used for cleaning computer equipment) or a small squeeze bellows (used for cleaning camera lenses).
2. Gently brush off any remaining particles with a soft camel hair brush or a soft lens tissue (available from camera supply stores).
3. Clean remaining “dirt” using a cotton swab or soft lens tissue dampened in distilled water. Do not scratch the surface.

For fingerprints or other grease, use any of the following:

- Denatured alcohol
- Ethanol
- Kodak lens cleaner

Apply one of the above to the window. Wipe gently with a soft, clean cloth until you see colors on the surface, then allow to air dry. Do not wipe the surface dry, as this may scratch the surface.

If silicones (used in hand creams) get on the window, gently wipe the surface with Hexane. Allow to air dry.

Note
Do not use any ammonia or any cleaners containing ammonia to clean the lens. This may result in permanent damage to the window’s surface!

9.4 Re-Calibration

A re-calibration is performed to determine and set the parameters affecting an instrument's performance in order to ensure its designed accuracy within prescribed limits. Re-calibrations must be performed at regular intervals depending on the specific operating conditions of the sensor.

Note
For onsite calibration, users are recommended to contact the Technical Support team to get further assistance on required calibration geometries and references.

원문: Fluke Process Instruments TV30 매뉴얼 · 제조사 원문 자료입니다. 사양은 제조사 사정에 따라 변경될 수 있습니다.

10 Appendix

10.1 Field of View Calculator

It is important that the TV30 camera is mounted at a distance from the target, sufficient to be able to “see” the entire area of interest. For this reason, the manufacturer provides a field of view calculating software called “Spot Size Calculator”, which allows the calculation of the thermal image size (Field of View FOV) and the pixel size (Instantaneous Field of View IFOV) for a given lens, based on a specific camera mounting distance.

Figure 10-1: Field of View Calculator for the Camera

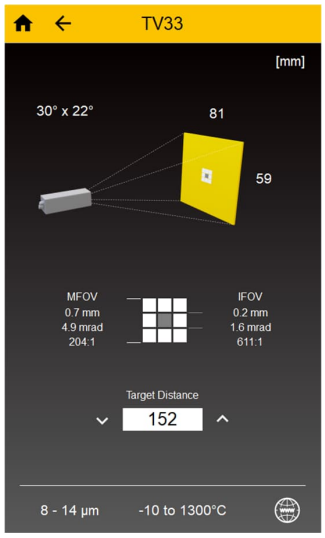

The “Spot Size Calculator” tool is available via the following stores and locations:

As app for Windows 10 based desktop computers, see Windows Store		Download from Windows Store
As app for Android mobiles, see Google Play Store		GET IT ON Google Play
As App for the iOS mobiles (iPhone and iPad), see App Store		Download on the App Store
As html5 web page, see https://www.flukeprocessinstruments.com/SpotSizeCalculator/index.html		

원문: Fluke Process Instruments TV30 매뉴얼 · 제조사 원문 자료입니다. 사양은 제조사 사정에 따라 변경될 수 있습니다.

10.2 Avoidance of Condensation

If environmental conditions make water cooling necessary, it is strictly recommended to check whether condensation will be a real problem or not. Water-cooling also causes a cooling of the air in the inner part of the sensor, thereby decreasing the capability of the air to hold water. The relative humidity increases and can reach 100% very quickly. In case of a further cooling, the surplus water vapor will condense out as water. The water will condense on the lenses and the electronics, resulting in possible damage to the sensor. Condensation can even happen on an IP67 sealed housing.

Note
There is no warranty repair possible in case of condensation within the housing!

To avoid condensation, the temperature of the cooling media and the flow rate must be selected to ensure a minimum device temperature. The minimum sensor temperature depends on the ambient temperature and the relative humidity. Please consider the following table.

Table 10-10: Minimum device temperatures [°C/°F]

Relative Humidity [%]

Ambient Temperature [°C/°F]	10	15	20	25	30	35	40	45	50	55	60	65	70	75	80	85	90	95	100
0/ 32	0/ 32	0/ 32	0/ 32	0/ 32	0/ 32	0/ 32	0/ 32	0/ 32	0/ 32	0/ 32	0/ 32	0/ 32	0/ 32	0/ 32	0/ 32	0/ 32	0/ 32	0/ 32	0/ 32
5/ 41	0/ 32	0/ 32	0/ 32	0/ 32	0/ 32	0/ 32	0/ 32	0/ 32	0/ 32	0/ 32	0/ 32	0/ 32	0/ 32	0/ 32	0/ 32	0/ 32	0/ 32	0/ 32	5/ 41
10/ 50	0/ 32	0/ 32	0/ 32	0/ 32	0/ 32	0/ 32	0/ 32	0/ 32	0/ 32	0/ 32	0/ 32	0/ 32	0/ 32	5/ 41	5/ 41	5/ 41	5/ 41	5/ 41	10/ 50
15/ 59	0/ 32	0/ 32	0/ 32	0/ 32	0/ 32	0/ 32	0/ 32	0/ 32	0/ 32	5/ 41	5/ 41	5/ 41	5/ 41	10/ 50	10/ 50	10/ 50	10/ 50	10/ 50	15/ 59
20/ 68	0/ 32	0/ 32	0/ 32	0/ 32	0/ 32	0/ 32	5/ 41	5/ 41	5/ 41	10/ 50	10/ 50	10/ 50	10/ 50	15/ 59	15/ 59	15/ 59	15/ 59	15/ 59	20/ 68
25/ 77	0/ 32	0/ 32	0/ 32	0/ 32	5/ 41	5/ 41	10/ 50	10/ 50	10/ 50	10/ 50	15/ 59	15/ 59	15/ 59	20/ 68	20/ 68	20/ 68	20/ 68	20/ 68	25/ 77
30/ 86	0/ 32	0/ 32	0/ 32	5/ 41	5/ 41	10/ 50	10/ 50	15/ 59	15/ 59	15/ 59	20/ 68	20/ 68	20/ 68	20/ 68	25/ 77	25/ 77	25/ 77	25/ 77	30/ 86
35/ 95	0/ 32	0/ 32	5/ 41	10/ 50	10/ 50	15/ 59	15/ 59	20/ 68	20/ 68	20/ 68	25/ 77	25/ 77	25/ 77	25/ 77	30/ 86	30/ 86	30/ 86	30/ 86	35/ 95
40/ 104	0/ 32	5/ 41	10/ 50	10/ 50	15/ 59	20/ 68	20/ 68	20/ 68	25/ 77	25/ 77	25/ 77	30/ 86	30/ 86	30/ 86	35/ 95	35/ 95	35/ 95	35/ 95	40/ 104
45/ 113	0/ 32	10/ 50	15/ 59	15/ 59	20/ 68	25/ 77	25/ 77	25/ 77	30/ 86	30/ 86	35/ 95	35/ 95	35/ 95	35/ 95	40/ 104	40/ 104	40/ 104	40/ 104	45/ 113
50/ 122	5/ 41	10/ 50	15/ 59	20/ 68	25/ 77	25/ 77	**30/ 86**	30/ 86	35/ 95	35/ 95	35/ 95	40/ 104	40/ 104	40/ 104	45/ 113	45/ 113	45/ 113	45/ 113	50/ 122
60/ 140	15/ 59	20/ 68	25/ 77	30/ 86	30/ 86	35/ 95	40/ 104	40/ 104	40/ 104	45/ 113	45/ 113	50/ 122	50/ 122	50/ 122	50/ 122	50/ 122	50/ 122	50/ 122	60/ 140
70/ 158	20/ 68	25/ 77	35/ 95	35/ 95	40/ 104	45/ 113	45/ 113	50/ 122	50/ 122	50/ 122	50/ 122	50/ 122	60/ 140	60/ 140	60/ 140	60/ 140	60/ 140	60/ 140	
80/ 176	25/ 77	35/ 95	40/ 104	45/ 113	50/ 122	50/ 122	50/ 122	60/ 140	60/ 140	60/ 140	60/ 140	60/ 140							
90/ 194	35/ 95	40/ 104	50/ 122	50/ 122	50/ 122	60/ 140	60/ 140	60/ 140											
100/ 212	40/ 104	50/ 122	50/ 122	60/ 140	60/ 140														

Example:

Ambient temperature = 50°C, Relative humidity = 40 % → Minimum device temperature = 30°C
The use of lower temperatures is at your own risk!

원문: Fluke Process Instruments TV30 매뉴얼 · 제조사 원문 자료입니다. 사양은 제조사 사정에 따라 변경될 수 있습니다.

10.3 Determination of Emissivity

Emissivity is a measure of an object's ability to absorb and emit infrared energy. It can have a value between 0 and 1.0. For example, a mirror has an emissivity of < 0.1, while the so-called *blackbody* reaches an emissivity value of 1.0. If a higher than actual emissivity value is set, the output will read low, provided the target temperature is above its ambient temperature. For example, if you have set 0.95 and the actual emissivity is 0.9, the temperature reading will be lower than the true temperature.

An object's emissivity can be determined by one of the following methods:

- Determine the actual temperature of the material using an RTD (PT100), a thermocouple, or any other suitable contact temperature method. Next, measure the object's temperature and adjust emissivity setting until the correct temperature value is reached. This is the correct emissivity for the measured material.
- For relatively low temperatures (up to 260°C / 500°F) place a plastic sticker on the object to be measured. This sticker should be large enough to cover the target spot. Next, measure the sticker's temperature using an emissivity setting of 0.95. Finally, measure the temperature of an adjacent area on the object and adjust the emissivity setting until the same temperature is reached. This is the correct emissivity for the measured material.
- If possible, apply flat black paint to a portion of the surface of the object. The emissivity of the paint is 0.95. Next, measure the temperature of the painted area using an emissivity setting of 0.95. Finally, measure the temperature of an adjacent area on the object and adjust the emissivity until the same temperature is reached. This is the correct emissivity for the measured material.

10.4 Typical Emissivity Values

The following table provides a brief reference guide for determining emissivity and can be used when one of the above methods is not practical. Emissivity values shown in the table are only approximate, since several parameters may affect the emissivity of a material. These include the following:

- Temperature
- Angle of measurement
- Geometry (plane, concave, convex)
- Thickness
- Surface quality (polished, rough, oxidized, sandblasted)
- Spectral range of measurement
- Transmission (e.g. thin films plastics)

To optimize surface temperature measurements, consider the following guidelines:

- Determine the object's emissivity using the instrument, which is also to be used for temperature measurements.
- Avoid reflections by shielding the object from surrounding temperature sources.
- For higher temperature objects, use instruments with the shortest wavelength possible.
- For translucent materials such as plastic foils or glass, ensure that the background is uniform and lower in temperature than the object.
- Mount the instrument perpendicular to the surface, if possible. In all cases, do not exceed angles more than 30° from incidence.

원문: Fluke Process Instruments TV30 매뉴얼 · 제조사 원문 자료입니다. 사양은 제조사 사정에 따라 변경될 수 있습니다.

Table 10-1: Typical Emissivity Values for Metals

Material	8 – 14 µm
Aluminum	
Unoxidized	0.02-0.1
Oxidized	0.2-0.4
Alloy A3003, Oxidized	0.3
Roughened	0.1-0.3
Polished	0.02-0.1
Brass	
Polished	0.01-0.05
Burnished	0.3
Oxidized	0.5
Chromium	0.02-0.2
Oxidized	
Copper	
Polished	0.03
Roughened	0.05-0.1
Oxidized	0.4-0.8
Gold	0.01-0.1
Haynes	
Alloy	0.3-0.8
Inconel	
Oxidized	0.7-0.95
Sandblasted	0.3-0.6
polished	0.15
Iron	
Oxidized	0.5-0.9
Unoxidized	0.05-0.2
Rusted	0.5-0.7
Molten	
Iron, Cast	
Oxidized	0.6-0.95
Unoxidized	0.2
Molten	0.2-0.3
Iron, Wrought	
Dull	0.9
Lead	
Polished	0.05-0.1
Rough	0.4
Oxidized	0.2-0.6
Magnesium	0.02-0.1
Mercury	0.05-0.15
Molybdenum	
Oxidized	0.2-0.6
Unoxidized	0.1

원문: Fluke Process Instruments TV30 매뉴얼 · 제조사 원문 자료입니다. 사양은 제조사 사정에 따라 변경될 수 있습니다.

Material	8 – 14 µm
Monel (Ni-Cu)	0.1-0.14
Oxidized	0.7-0.9
Nickel	
Oxidized	0.2-0.5
Electrolytic	0.05-0.15
Platinum	
Black	0.9
Silver	0.02
Steel	
Cold-Rolled	0.7-0.9
Ground Sheet	0.4-0.6
Polished Sheet	0.1
Molten	
Oxidized	0.7-0.9
Stainless	0.1-0.8
Tin (Unoxidized)	0.05
Titanium	
Polished	0.05-0.2
Oxidized	0.5-0.6
Tungsten	0.03
Polished	0.03-0.1
Zinc	
Oxidized	0.1
Polished	0.02

Table 10-2: Typical Emissivity Values for Non-Metals

Material	8 – 14 µm
Asbestos	0.95
Asphalt	0.95
Basalt	0.7
Carbon	
Unoxidized	0.8-0.9
Graphite	0.7-0.8
Carborundum	0.9
Ceramic	0.95
Clay	0.95
Coke	0.95-1.00
Concrete	0.95
Cloth	0.95
Glass	
Plate	0.85
“Gob”	
Gravel	0.95
Gypsum	0.8-0.95
Ice	0.98
Limestone	0.98
Paint (non-al.)	0.9-0.95
Paper (any color)	0.95
Plastic, opaque at 500 µm thickness (20 mils)	0.95
Rubber	0.95
Sand	0.9
Snow	0.9
Soil	0.9-0.98
Water	0.93
Wood, Natural	0.9-0.95

원문: Fluke Process Instruments TV30 매뉴얼 · 제조사 원문 자료입니다. 사양은 제조사 사정에 따라 변경될 수 있습니다.