R3510

REED INSTRUMENTS

Long Stem pH Meter

WARRANTY 1 YEAR WARRANTY

Instruction Manual

REED Instruments
1-877-849-2127 | info@reedinstruments.com | www.reedinstruments.com

원문: REED Instruments R3510 매뉴얼 · 제조사 원문 자료입니다. 사양은 제조사 사정에 따라 변경될 수 있습니다.

Table of Contents

Introduction 3
Product Quality 3
Safety 4
Features 5
Included 5
Specifications 6
Instrument Description 7
Display Description 8
Operating Instructions 9-12
Power ON/OFF 9
Electrode Preparation and Usage Instructions 9
Testing with the pH Meter 10
Auto Power Off 9-10
pH Calibration Procedure 11-12
Troubleshooting Tips 13
Power On but No Display 13
Slow Response 13
Display Shows "- - -" and ATC Indicator 13
pH Value Fluctuates Rapidly 13
Battery Replacement 14
Applications 15
Accessories and Replacement Parts 15
Product Care 16
Product Warranty 17
Product Disposal and Recycling 17
Product Support 17

REED Instruments
1-877-849-2127 | info@reedinstruments.com | www.reedinstruments.com

원문: REED Instruments R3510 매뉴얼 · 제조사 원문 자료입니다. 사양은 제조사 사정에 따라 변경될 수 있습니다.

Introduction

Thank you for purchasing your REED R3510 Long Stem pH Meter. Please read the following instructions carefully before using your instrument. By following the steps outlined in this manual your meter will provide years of reliable service.

Product Quality

This product has been manufactured in an ISO9001 facility and has been calibrated during the manufacturing process to meet stated product specifications. If a certificate of calibration is required please contact the nearest authorized REED distributor or authorized Service Center. Please note an additional fee for this service will apply.

REED Instruments
1-877-849-2127 | info@reedinstruments.com | www.reedinstruments.com

원문: REED Instruments R3510 매뉴얼 · 제조사 원문 자료입니다. 사양은 제조사 사정에 따라 변경될 수 있습니다.

Safety

Never attempt to repair or modify your instrument. Dismantling your product, other than for the purpose of replacing batteries, may cause damage that will not be covered under the manufacturer's warranty. Servicing should only be provided by an authorized service center.

⚠ WARNING ⚠

- Remove and immediately recycle or dispose of used batteries according to local regulations and keep away from children. Do NOT dispose of batteries in household trash or incinerate.
- Even used batteries may cause severe injury or death.
- Call a local poison control center for treatment information.
- Identification of compatible battery type: (2) CR2032
- Nominal battery voltage: 3V.
- Non-rechargeable batteries are not to be recharged.
- Do not force discharge, recharge, disassemble, heat above 140°F (60°C) or incinerate. Doing so may result in injury due to venting, leakage or explosion resulting in chemical burns.
- Ensure the batteries are installed correctly according to polarity (+ and -).
- Do not mix old and new batteries, different brands or types of batteries, such as alkaline, carbon-zinc, or rechargeable batteries.
- Remove and immediately recycle or dispose of batteries from equipment not used for an extended period of time according to local regulations.
- Always completely secure the battery compartment. If the battery compartment does not close securely, stop using the product, remove the batteries, and keep them away from children.

REED Instruments
1-877-849-2127 | info@reedinstruments.com | www.reedinstruments.com

원문: REED Instruments R3510 매뉴얼 · 제조사 원문 자료입니다. 사양은 제조사 사정에 따라 변경될 수 있습니다.

Features

- Large, clear LCD display
- Long 4.7" (119.4 mm) pH probe
- Easy one-touch auto-calibration
- Data hold function
- Waterproof housing
- Protective cap keeps sensor moistened
- Low battery indicator and auto shut off

Included

- pH Meter
- Electrode Storage Bottle
- Batteries

REED Instruments
1-877-849-2127 | info@reedinstruments.com | www.reedinstruments.com

원문: REED Instruments R3510 매뉴얼 · 제조사 원문 자료입니다. 사양은 제조사 사정에 따라 변경될 수 있습니다.

Specifications

pH

Measuring Range:	0.00 to 14.00 pH
Accuracy:	±0.2 pH
Resolution:	0.01 pH

Probe Specifications

Reference:	Single, Ag/AgCl
Junction:	Ceramic
Electrolyte:	Gel, 3.3M KCl
Tip Shape:	Round
Probe Diameter:	0.5" (12mm)
Probe Length:	5.11" (130mm)

General Specifications

pH Calibration:	Yes (3-point)
Display:	LCD
Data Hold:	Yes
LCD Size:	1.14 x 0.89" (29 x 22.5mm)
Auto Shut-Off:	Yes (after approximately 20 minutes / Off)
Low Battery Indicator:	Yes
Power Supply:	2 x CR2032 Batteries
Battery Life:	100 hours of continuous use
Product Certifications:	CE, IP54
Operating Temperature:	32 to 122°F (0 to 50°C)
Operating Humidity Range:	10 to 80%
Storage Temperature:	14 to 122°F (-10 to 50°C)
Storage Humidity Range:	10 to 80%
Dimensions:	3.7 x 1.4 x 0.79" (94 x 36 x 20mm)
Weight:	4.05oz (115g)

REED Instruments
1-877-849-2127 | info@reedinstruments.com | www.reedinstruments.com

원문: REED Instruments R3510 매뉴얼 · 제조사 원문 자료입니다. 사양은 제조사 사정에 따라 변경될 수 있습니다.

Instrument Description

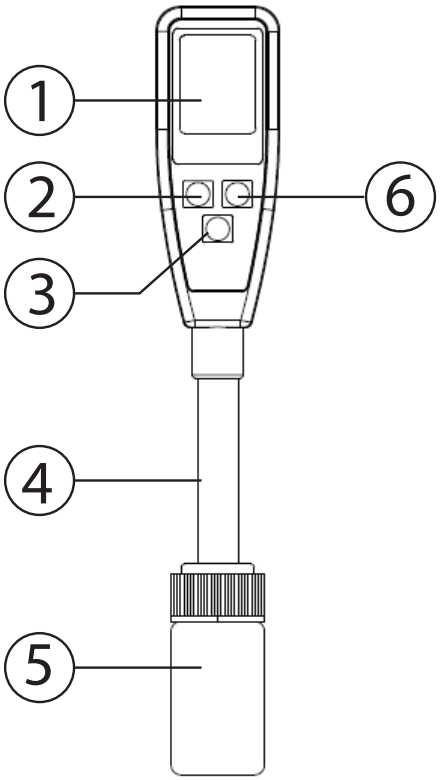

1. LCD Display
2. HOLD Button
3. POWER Button
4. Electrode
5. Electrode Storage Bottle
6. CAL Button

원문: REED Instruments R3510 매뉴얼 · 제조사 원문 자료입니다. 사양은 제조사 사정에 따라 변경될 수 있습니다.

Display Description

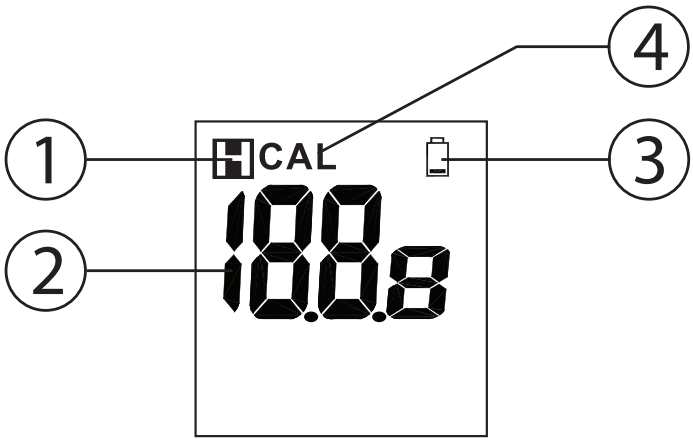

1. Hold Status Indicator
2. pH Measurement Value
3. Battery Status Indicator
4. Calibration Mode Indicator

REED Instruments
1-877-849-2127 | info@reedinstruments.com | www.reedinstruments.com

원문: REED Instruments R3510 매뉴얼 · 제조사 원문 자료입니다. 사양은 제조사 사정에 따라 변경될 수 있습니다.

Operating Instructions

Before use, soak the glass bulb in distilled water for a minimum of 30 minutes. In order to obtain the most accurate results possible, a pH meter should be calibrated at least once a day.

Power ON/OFF

Turn the meter on or off by pressing the "Power" button.

Electrode Preparation and Usage Instructions

Remove the electrode storage bottle by rotating it counterclockwise. Once loosened, pull the bottle off completely to expose the electrode.

Note: It's normal to find white crystals on the cap or electrode assembly.

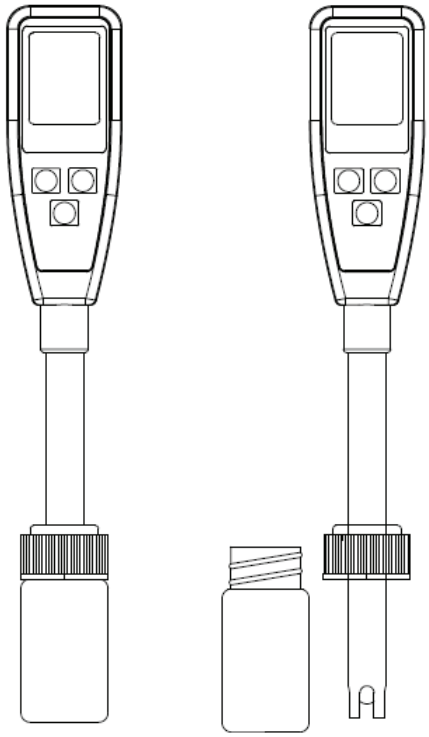

Important: For pH meters, always ensure the storage bottle is filled with storage buffer solution. This keeps the electrode wet and in optimal condition for storage.

REED Instruments
1-877-849-2127 | info@reedinstruments.com | www.reedinstruments.com

원문: REED Instruments R3510 매뉴얼 · 제조사 원문 자료입니다. 사양은 제조사 사정에 따라 변경될 수 있습니다.

Testing with the pH Meter

1. Dip the exposed electrode into the test solution. Press the "Power" button to turn on the meter. Gently stir the solution to achieve a stable reading.
2. While in measurement mode, a small dot "•" will flash on the display, indicating the meter is actively taking readings.

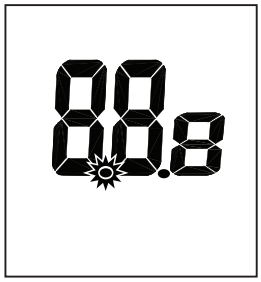

3. To freeze the current reading, press the HOLD button. The "Hold" icon will appear on the screen, and the small dot will stop flashing.

4. Press the HOLD button again to exit the hold mode.
5. Once finished, clean the electrode, replace the storage bottle, and store the meter in an environment between 0–50°C.

Auto Power Off

To preserve battery life, the meter is programmed to turn off after approximately 20 minutes of inactivity.

To disable the auto power-off function:

1. Before turning on the device, press and hold the ⏻ and HOLD buttons simultaneously.
2. Keep holding the buttons until the letter "n" appears on the screen.

Once "n" is displayed, release the keys to exit and return to normal operation.

continued…

REED Instruments
1-877-849-2127 | info@reedinstruments.com | www.reedinstruments.com

원문: REED Instruments R3510 매뉴얼 · 제조사 원문 자료입니다. 사양은 제조사 사정에 따라 변경될 수 있습니다.

Note: Disabling sleep mode will reset after every power-off, so this process must be repeated each time the device is powered on.

pH Calibration Procedure

To obtain the most accurate results possible, a pH meter should be calibrated at least once a day.

If the pH meter is stored for an extended period of time, prior to calibration, condition your electrode in pH 4 buffer solution or distilled water for a minimum of 1 hour.

1. Ensure the pH meter is turned on and ready for use.
2. Immerse the electrode into a buffer solution (choose from pH 4, 7, or 10).
3. Start with the pH 7 buffer solution, as this is typically calibrated first for accuracy. Follow with pH 4 or pH 10 to complete the calibration process.
4. Press the CAL button to enter the pH calibration mode.
5. The "CAL" icon will briefly appear on the screen, and the pH value of the buffer (4, 7, or 10) will be displayed.

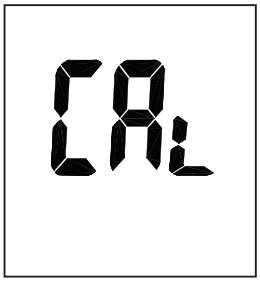

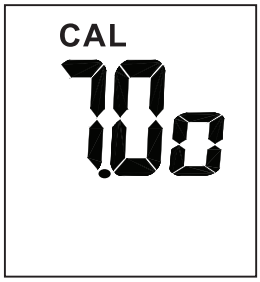

Note: If there is an issue (e.g., incorrect buffer, damaged probe, or inability to detect the correct voltage range), the meter will exit calibration mode automatically after 10 seconds. The message "End" will briefly appear on the screen before returning to normal operation.

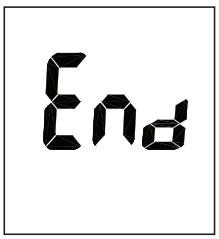

continued…

REED Instruments
1-877-849-2127 | info@reedinstruments.com | www.reedinstruments.com

원문: REED Instruments R3510 매뉴얼 · 제조사 원문 자료입니다. 사양은 제조사 사정에 따라 변경될 수 있습니다.

Acceptable Voltage Ranges:

pH 4.00: 97mV to 250mV

pH 7.00: -60mV to 60mV

pH 10.00: -250mV to -97mV

6. If the probe correctly recognizes the buffer solution, the corresponding pH value (4, 7, or 10) will appear on the display within 2 seconds.
7. If your buffer solution has a slightly different pH (e.g., 7.01), press the HOLD button to adjust the value.

The adjustable calibration Point Range are as follows:

For pH 4.0: The adjustable range is 3.50 to 4.50.

For pH 7.0: The adjustable range is 6.50 to 7.50.

For pH 10.0: The adjustable range is 9.50 to 10.50.

8. Once the electrode provides a stable reading and no buttons are pressed, the meter will automatically save the calibration value and exit calibration mode.

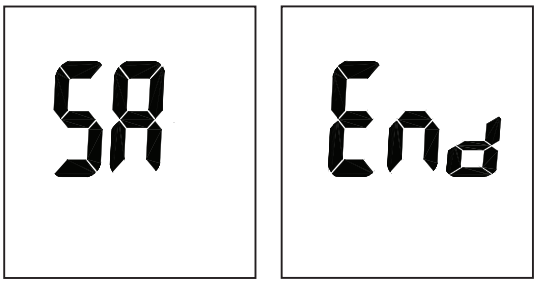

9. Rinse the probe with de-ionized water or a suitable rinse solution (e.g., tap water) after each measurement to extend the life of the meter and ensure accurate readings.
10. Repeat the above steps for all three buffer solutions (pH 4, 7, and 10) to ensure accurate 3-point calibration.

REED Instruments
1-877-849-2127 | info@reedinstruments.com | www.reedinstruments.com

원문: REED Instruments R3510 매뉴얼 · 제조사 원문 자료입니다. 사양은 제조사 사정에 따라 변경될 수 있습니다.

Troubleshooting Tips

Power On but No Display

1. Verify that the batteries are correctly inserted, making proper contact with the terminals, and are in the correct polarity.
2. If the issue persists, replace the old batteries with new ones and try again.
3. Remove the batteries for at least one minute, then reinsert them and power on the device.

Slow Response

To improve response time:

1. Clean the probe by immersing the electrode in tap water for 10–15 minutes.
2. After soaking, rinse the probe thoroughly with distilled water.
3. Alternatively, you can use a general-purpose electrode cleaner for more effective cleaning.

Display Shows "- - -" and ATC Indicator

This indicates that the pH reading is out of range. The solution being tested may be either too acidic or too alkaline for the device to measure.

pH Value Fluctuates Rapidly

Rapid fluctuations are normal if the electrode is exposed to air. Ensure the electrode is properly immersed in the solution to get stable readings.

REED Instruments
1-877-849-2127 | info@reedinstruments.com | www.reedinstruments.com

원문: REED Instruments R3510 매뉴얼 · 제조사 원문 자료입니다. 사양은 제조사 사정에 따라 변경될 수 있습니다.

Battery Replacement

The batteries must be replaced when the low battery icon appears on the LCD.

1. Ensure the meter is turned off before proceeding.
2. Using a coin, loosen the battery cover by turning it clockwise. Important: Do not remove or misplace the black O-ring.
3. Replace the old batteries with two new CR2032 button cells.

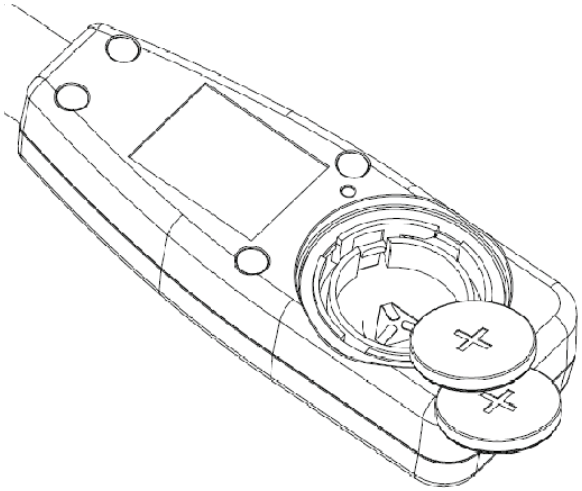

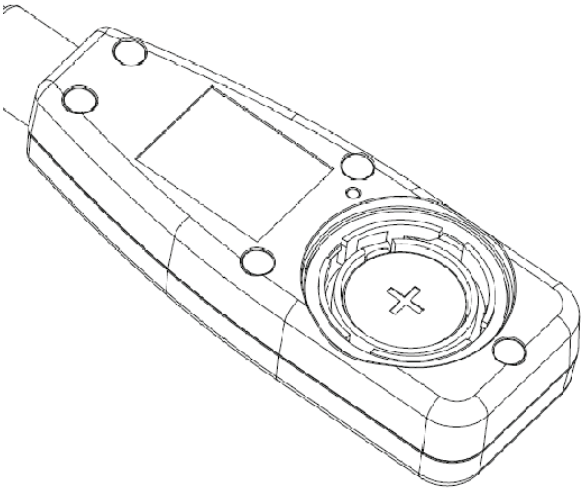

4. Confirm the batteries are securely in place with the correct polarity.
5. Secure the battery cover back into place and tighten it by turning it counterclockwise until it locks.

⚠ WARNING **INGESTION HAZARD • DEATH** or serious injury can occur • A swallowed button cell or coin battery can cause **Internal Chemical Burns** in as little as **2 hours** • Keep new and used batteries **OUT OF REACH OF CHILDREN • Seek immediate medical attention** if a battery is suspected to be swallowed or inserted inside any part of the body • For treatment information call: 1-800-498-8666.

Note: After replacing the batteries, it is necessary to re-calibrate the meter for accurate readings.
If you do not intend to use the instrument for a month or longer, remove the batteries to avoid damage caused by leakage. Do not leave batteries in unused instruments.

REED Instruments
1-877-849-2127 | info@reedinstruments.com | www.reedinstruments.com

원문: REED Instruments R3510 매뉴얼 · 제조사 원문 자료입니다. 사양은 제조사 사정에 따라 변경될 수 있습니다.

Applications

- Water Conditioning
- General purpose pH measurement
- Aquariums
- Wastewater monitoring
- Beverage Production

Accessories and Replacement Parts

- **R1404** Buffer Solution, 4.01 pH
- **R1407** Buffer Solution, 7.00 pH
- **R1410** Buffer Solution, 10.00 pH
- **R1420** Electrode Storage Solution
- **R1425** Electrode Cleaning Solution
- **CA-52A** Soft Carrying Case

Don't see your part listed here? For a complete list of all accessories and replacement parts visit your product page on www.REEDInstruments.com.

REED Instruments
1-877-849-2127 | info@reedinstruments.com | www.reedinstruments.com

원문: REED Instruments R3510 매뉴얼 · 제조사 원문 자료입니다. 사양은 제조사 사정에 따라 변경될 수 있습니다.

Product Care

To keep your instrument in good working order we recommend the following:

- Store your product in a clean, dry place.
- Change the battery as needed.
- If your instrument isn't being used for a period of one month or longer please remove the battery.
- Clean your product and accessories with biodegradable cleaner. Do not spray the cleaner directly on the instrument. Use on external parts only.
- Before first use or after storage, you may notice white KCl crystals forming outside your electrode. This will not interfere with measurements. Simply rinse the electrode.
- Always keep the pH glass bulb wet by using the cap to protect and store the electrode.
- Always rinse the pH electrode in de-ionized water or rinse solution before next use.
- Never touch or rub the glass bulb.
- Make sure the electrode is clean. Between measurements, rinse the electrode with de-ionized water. If the electrode has been exposed to a solvent immiscible with water, clean it with a solvent miscible with water e.g. ethanol or acetone and rinse carefully with water.
- Store the electrode carefully using storage solution (If not available use pH4 solution).

REED Instruments
1-877-849-2127 | info@reedinstruments.com | www.reedinstruments.com

원문: REED Instruments R3510 매뉴얼 · 제조사 원문 자료입니다. 사양은 제조사 사정에 따라 변경될 수 있습니다.

Product Warranty

REED Instruments guarantees this instrument to be free of defects in material or workmanship for a period of one (1) year from date of shipment. During the warranty period, REED Instruments will repair or replace, at no charge, products or parts of a product that proves to be defective because of improper material or workmanship, under normal use and maintenance. REED Instruments total liability is limited to repair or replacement of the product. REED Instruments shall not be liable for damages to goods, property, or persons due to improper use or through attempts to utilize the instrument under conditions which exceed the designed capabilities. In order to begin the warranty service process, please contact us by phone at 1-877-849-2127 or by email at info@reedinstruments.com to discuss the claim and determine the appropriate steps to process the warranty.

Product Disposal and Recycling

	Please follow local laws and regulations when disposing or recycling your instrument. Your product contains electronic components and must be disposed of separately from standard waste products.

Product Support

If you have any questions on your product, please contact your authorized REED distributor or REED Instruments Customer Service by phone at 1-877-849-2127 or by email at info@reedinstruments.com.

Please visit **www.REEDInstruments.com** for the most up-to-date manuals, datasheets, product guides and software.

Product specifications subject to change without notice.
All rights reserved. Any unauthorized copying or reproduction of this manual is strictly prohibited without prior written permission from REED Instruments.

REED Instruments
1-877-849-2127 | info@reedinstruments.com | www.reedinstruments.com

원문: REED Instruments R3510 매뉴얼 · 제조사 원문 자료입니다. 사양은 제조사 사정에 따라 변경될 수 있습니다.

REED INSTRUMENTS

TEST & MEASURE WITH CONFIDENCE

CHECK OUT OUR LATEST PRODUCTS!

REED Instruments

1-877-849-2127 | info@reedinstruments.com | www.reedinstruments.com

원문: REED Instruments R3510 매뉴얼 · 제조사 원문 자료입니다. 사양은 제조사 사정에 따라 변경될 수 있습니다.