Product Folder | Sample & Buy | Technical Documents | Tools & Software | Support & Community | Reference Design

TEXAS INSTRUMENTS

INA193, INA194, INA195
INA196, INA197, INA198

SBOS307G – MAY 2004 – REVISED JANUARY 2015

INA19x Current Shunt Monitor −16 V to +80 V Common-Mode Range

1 Features

- Wide Common-Mode Voltage: −16 V to +80 V
- Low Error: 3.0% Over Temp (maximum)
- Bandwidth: Up to 500 kHz
- Three Transfer Functions Available: 20 V/V, 50 V/V, and 100 V/V
- Quiescent Current: 900 µA (maximum)
- Complete Current Sense Solution

2 Applications

- Welding Equipment
- Notebook Computers
- Cell Phones
- Telecom Equipment
- Automotive
- Power Management
- Battery Chargers

3 Description

The INA193−INA198 family of current shunt monitors with voltage output can sense drops across shunts at common-mode voltages from −16 V to +80 V, independent of the INA19x supply voltage. They are available with three output voltage scales: 20 V/V, 50 V/V, and 100 V/V. The 500 kHz bandwidth simplifies use in current control loops. The INA193−INA195 devices provide identical functions but alternative pin configurations to the INA196−INA198 devices, respectively.

The INA193−INA198 devices operate from a single 2.7-V to 18-V supply, drawing a maximum of 900 µA of supply current. They are specified over the extended operating temperature range (−40°C to +125°C), and are offered in a space-saving SOT-23 package.

Device Information(1)

PART NUMBER	PACKAGE	BODY SIZE (NOM)
INA193	SOT-23 (5)	2.90 mm × 1.60 mm
INA194		
INA195		
INA196		
INA197		
INA198		

(1) For all available packages, see the orderable addendum at the end of the datasheet.

Simplified Schematic

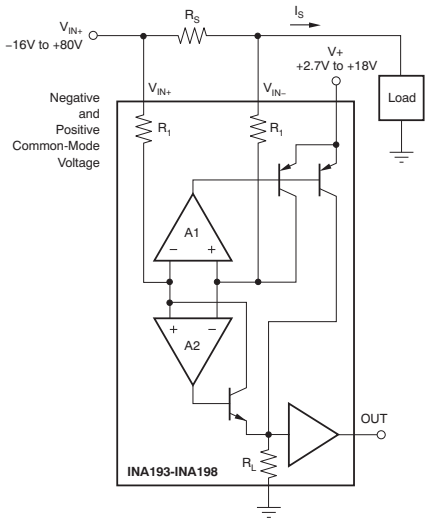

An IMPORTANT NOTICE at the end of this data sheet addresses availability, warranty, changes, use in safety-critical applications, intellectual property matters and other important disclaimers. PRODUCTION DATA.

원문: ina196.pdf (media.ncd.io) · 제조사 원문 자료입니다. 사양은 제조사 사정에 따라 변경될 수 있습니다.

Table of Contents

1 **Features** ... 1
2 **Applications** ... 1
3 **Description** ... 1
4 **Revision History** ... 2
5 **Device Comparison Table** ... 3
6 **Pin Configuration and Functions** ... 3
7 **Specifications** ... 4
7.1 Absolute Maximum Ratings ... 4
7.2 ESD Ratings ... 4
7.3 Recommended Operating Conditions ... 4
7.4 Thermal Information ... 4
7.5 Electrical Characteristics ... 5
7.6 Typical Characteristics ... 7
8 **Detailed Description** ... 11
8.1 Overview ... 11
8.2 Functional Block Diagram ... 11
8.3 Feature Description ... 12
8.4 Device Functional Modes ... 16
9 **Application and Implementation** ... 22
9.1 Application Information ... 22
9.2 Typical Application ... 22
10 **Power Supply Recommendations** ... 23
11 **Layout** ... 24
11.1 Layout Guidelines ... 24
11.2 Layout Example ... 24
12 **Device and Documentation Support** ... 25
12.1 Related Links ... 25
12.2 Trademarks ... 25
12.3 Electrostatic Discharge Caution ... 25
12.4 Glossary ... 25
13 **Mechanical, Packaging, and Orderable Information** ... 25

4 Revision History

NOTE: Page numbers for previous revisions may differ from page numbers in the current version.

Changes from Revision F (February 2010) to Revision G	Page
• Added *ESD Ratings* table, *Feature Description* section, *Device Functional Modes*, *Application and Implementation* section, *Power Supply Recommendations* section, *Layout* section, *Device and Documentation Support* section, and *Mechanical, Packaging, and Orderable Information* section	4

Changes from Revision E (August 2006) to Revision F	Page
• Updated document format to current standards	1
• Added test conditions to Output, *Total Output Error* parameter in Electrical Characteristics: V_S = +12V	5

Copyright © 2004–2015, Texas Instruments Incorporated

원문: ina196.pdf (media.ncd.io) · 제조사 원문 자료입니다. 사양은 제조사 사정에 따라 변경될 수 있습니다.

TESSOL Technical Library
TS-TL-NCD-029
we measure, we calibrate, we validate.
㈜테솔 · www.tessol.com TS-TL-NCD-029 2 / 32
KOLAS 국제공인교정기관 · ISO/IEC 17025

5 Device Comparison Table

PART NUMBER	GAIN	PINOUT(1)
INA193	20 V/V	Pinout #1
INA194	50 V/V	Pinout #1
INA195	100 V/V	Pinout #1
INA196	20 V/V	Pinout #2
INA197	50 V/V	Pinout #2
INA198	100 V/V	Pinout #2

(1) See *Pin Configuration and Functions* for Pinout #1 and Pinout #2.

6 Pin Configuration and Functions

DBV Package
5-Pin SOT-23
INA193, INA194, INA195 Top View

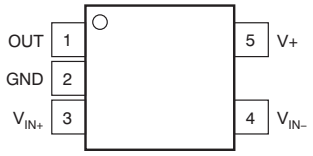

Pinout #1

DBV Package
5-Pin SOT-23
INA196, INA197, INA198 Top View

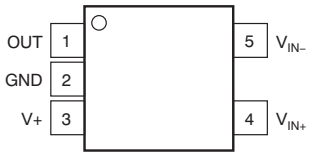

Pinout #2

Pin Functions

PIN			TYPE	DESCRIPTION
NAME	INA193, INA194, INA195	INA196, INA197, INA198		
	DBV	DBV		
GND	2	2	GND	Ground
OUT	1	1	O	Output voltage
V+	5	3	Analog	Power supply, 2.7 V to 18 V
V_{IN+}	3	4	I	Connect to supply side of shunt resistor
V_{IN-}	4	5	I	Connect to load side of shunt resistor

Copyright © 2004–2015, Texas Instruments Incorporated

원문: ina196.pdf (media.ncd.io) · 제조사 원문 자료입니다. 사양은 제조사 사정에 따라 변경될 수 있습니다.

7 Specifications

7.1 Absolute Maximum Ratings

over operating free-air temperature range (unless otherwise noted) (1)

	MIN	MAX	UNIT
Supply Voltage		18	V
Analog Inputs, V_{IN+}, V_{IN-}	–18	18	V
Differential (V_{IN+}) – (V_{IN-})	–18	18	V
Common-Mode (2)	–16	80	V
Analog Output, Out (2)	GND – 0.3	(V+) + 0.3	V
Input Current Into Any Pin (2)		5	mA
Operating Temperature	–55	150	°C
Junction Temperature		150	°C
Storage temperature, T_{stg}	–65	150	°C

(1) Stresses beyond those listed under *Absolute Maximum Ratings* may cause permanent damage to the device. These are stress ratings only, which do not imply functional operation of the device at these or any other conditions beyond those indicated under *Recommended Operating Conditions*. Exposure to absolute-maximum-rated conditions for extended periods may affect device reliability.
(2) Input voltage at any pin may exceed the voltage shown if the current at that pin is limited to 5mA.

7.2 ESD Ratings

			VALUE	UNIT
$V_{(ESD)}$	Electrostatic discharge	Human body model (HBM), per ANSI/ESDA/JEDEC JS-001, all pins (1)	±4000	V
		Charged device model (CDM), per JEDEC specification JESD22-C101, all pins (2)	±1000	

(1) JEDEC document JEP155 states that 500-V HBM allows safe manufacturing with a standard ESD control process.
(2) JEDEC document JEP157 states that 250-V CDM allows safe manufacturing with a standard ESD control process.

7.3 Recommended Operating Conditions

over operating free-air temperature range (unless otherwise noted)

		MIN	NOM	MAX	UNIT
V_{CM}	Common-mode input voltage		12		V
V+	Operating supply voltage		12		V
T_A	Operating free-air temperature	-40		125	ºC

7.4 Thermal Information

THERMAL METRIC (1)		INA19x DBV 5 PINS	UNIT
$R_{\theta JA}$	Junction-to-ambient thermal resistance	221.7	°C/W
$R_{\theta JC(top)}$	Junction-to-case (top) thermal resistance	144.7	
$R_{\theta JB}$	Junction-to-board thermal resistance	49.7	
ψ_{JT}	Junction-to-top characterization parameter	26.1	
ψ_{JB}	Junction-to-board characterization parameter	49.0	

(1) For more information about traditional and new thermal metrics, see the *IC Package Thermal Metrics* application report, SPRA953.

Copyright © 2004–2015, Texas Instruments Incorporated

원문: ina196.pdf (media.ncd.io) · 제조사 원문 자료입니다. 사양은 제조사 사정에 따라 변경될 수 있습니다.

TESSOL Technical Library
TS-TL-NCD-029
we measure, we calibrate, we validate.
㈜테솔 · www.tessol.com TS-TL-NCD-029 4 / 32
KOLAS 국제공인교정기관 · ISO/IEC 17025

7.5 Electrical Characteristics

All specifications at T_A = 25°C, V_S = 12 V, V_{IN+} = 12 V, and V_{SENSE} = 100 mV, unless otherwise noted.

PARAMETER		TEST CONDITIONS		TA = 25°C MIN	TA = 25°C TYP	TA = 25°C MAX	T_A = −40°C to +125°C MIN	T_A = −40°C to +125°C TYP	T_A = −40°C to +125°C MAX	UNIT
INPUT										
V_{SENSE}	Full-Scale Input Voltage	$V_{SENSE} = V_{IN+} - V_{IN-}$			0.15	(V_S – 0.2)/Gain	–16			V
V_{CM}	Common-Mode Input Range					80	–16			V
CMR	Common-Mode Rejection	V_{IN+} = −16 V to 80 V		80	94					dB
	Common-Mode Rejection, Over Temperature	V_{IN+} = 12 V to 80 V					100	120		dB
V_{OS}	Offset Voltage, RTI				±0.5	2				mV
	Offset Voltage, RTI Over Temperature							0.5	3	mV
dV_{OS}/dT	Offset Voltage, RTI vs Temperature							2.5		μV/°C
PSR	Offset Voltage, RTI vs Power Supply	V_S = 2.7 V to 18 V, V_{IN+} = 18 V						5	100	μV/V
I_B	Input Bias Current, V_{IN-} pin							±8	±16	μA
OUTPUT (V_{SENSE} ≥ 20mV)										
G	Gain	INA193, INA196			20					V/V
		INA194, INA197			50					V/V
		INA195, INA198			100					V/V
	Gain Error	V_{SENSE} = 20 mV to 100 mV, T_A = 25°C			±0.2%	±1%				
	Gain Error Over Temperature	V_{SENSE} = 20 mV to 100 mV							±2	
	Total Output Error(1)	V_{SENSE} = 100 mV			±0.75%	±2.2%				
	Total Output Error Over Temperature							±1%	±3%	
	Nonlinearity Error	V_{SENSE} = 20 mV to 100 mV			±0.002%	±0.1%				
R_O	Output Impedance				1.5					Ω
	Maximum Capacitive Load	No Sustained Oscillation			10					nF
	Output(2)	All Devices	−16 V ≤ V_{CM} < 0 V, V_{SENSE} < 20 mV		300					mV
			V_S < V_{CM} ≤ 80 V, V_{SENSE} < 20 mV		300					
		INA193, INA196	0 V ≤ V_{CM} ≤ V_S, V_S = 5 V, V_{SENSE} < 20 mV			0.4				V
		INA194, INA197				1				V
		INA195, INA198				2				V
VOLTAGE OUTPUT(3) (R_L = 100 kΩ to GND)										
	Swing to V+ Power-Supply Rail							(V+) – 0.1	(V+) – 0.2	V
	Swing to GND(4)							(V_{GND}) + 3	(V_{GND}) + 50	mV
FREQUENCY RESPONSE										
BW	Bandwidth	INA193, INA196	C_{LOAD} = 5 pF		500					kHz
		INA194, INA197			300					kHz
		INA195, INA198			200					kHz

(1) Total output error includes effects of gain error and V_{OS}.
(2) For details on this region of operation, see the *Accuracy Variations as a Result of V_{SENSE} and Common-Mode Voltage* section.
(3) See Typical Characteristic curve *Output Swing vs Output Current*, Figure 7.
(4) Specified by design.

Copyright © 2004–2015, Texas Instruments Incorporated

원문: ina196.pdf (media.ncd.io) · 제조사 원문 자료입니다. 사양은 제조사 사정에 따라 변경될 수 있습니다.

Electrical Characteristics (continued)

All specifications at T_A = 25°C, V_S = 12 V, V_{IN+} = 12 V, and V_{SENSE} = 100 mV, unless otherwise noted.

PARAMETER		TEST CONDITIONS	TA = 25°C			T_A = −40°C to +125°C			UNIT
			MIN	TYP	MAX	MIN	TYP	MAX	
	Phase Margin	C_{LOAD} < 10 nF		40					
SR	Slew Rate			1					V/µs
t_S	Settling Time (1%)	V_{SENSE} = 10 mV to 100 mV_{PP}, C_{LOAD} = 5 pF		2					µs
NOISE, RTI									
	Voltage Noise Density			40					nV/√Hz
POWER SUPPLY									
V_S	Operating Range					2.7		18	V
I_Q	Quiescent Current	V_{OUT} = 2 V		700	900				µA
	Quiescent Current Over Temperature	V_{SENSE} = 0 mV					370	950	µA
TEMPERATURE RANGE									
	Specified Temperature Range		–40		125				°C
	Operating Temperature Range		–55		150				°C
	Storage Temperature Range		–65		150				°C
θ_{JA}	Thermal Resistance, SOT23			200					°C/W

Copyright © 2004–2015, Texas Instruments Incorporated

원문: ina196.pdf (media.ncd.io) · 제조사 원문 자료입니다. 사양은 제조사 사정에 따라 변경될 수 있습니다.

we measure, we calibrate, we validate.
㈜테솔 · www.tessol.com TS-TL-NCD-029 6 / 32
KOLAS 국제공인교정기관 · ISO/IEC 17025

TS-TL-NCD-029

7.6 Typical Characteristics

All specifications at T_A = 25°C, V_S = 12 V, and V_{IN+} = 12 V, and V_{SENSE} = 100 mV, unless otherwise noted.

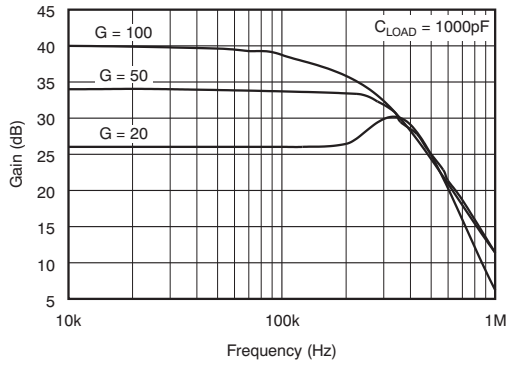

Figure 1. Gain vs Frequency

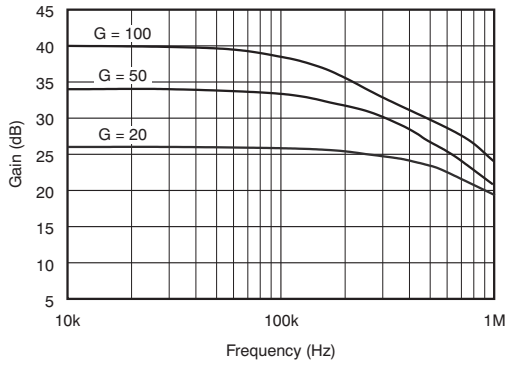

Figure 2. Gain vs Frequency

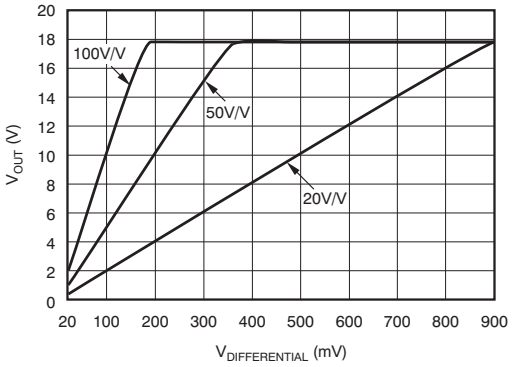

Figure 3. Gain Plot

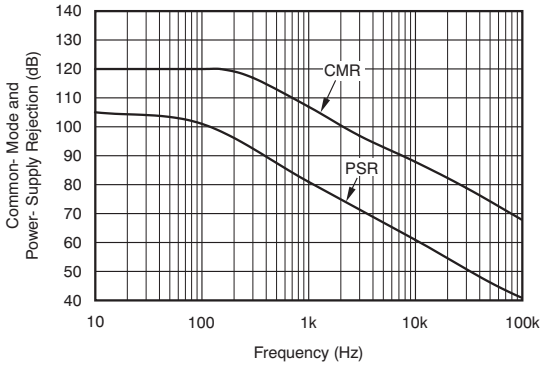

Figure 4. Common-Mode and Power-Supply Rejection vs Frequency

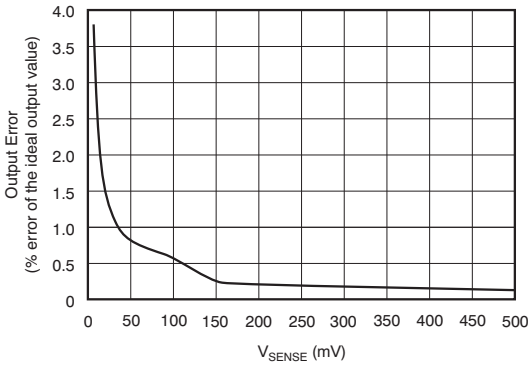

Figure 5. Output Error vs V_{SENSE}

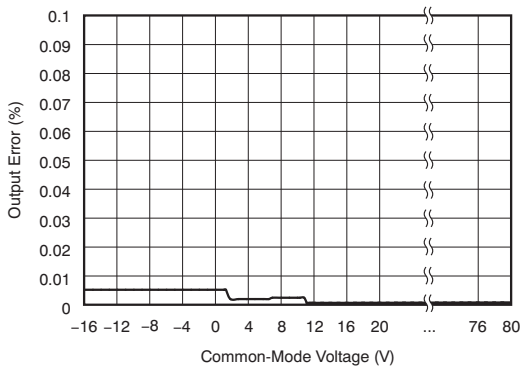

Figure 6. Output Error vs Common-Mode Voltage

원문: ina196.pdf (media.ncd.io) · 제조사 원문 자료입니다. 사양은 제조사 사정에 따라 변경될 수 있습니다.

Typical Characteristics (continued)

All specifications at T_A = 25°C, V_S = 12 V, and V_{IN+} = 12 V, and V_{SENSE} = 100 mV, unless otherwise noted.

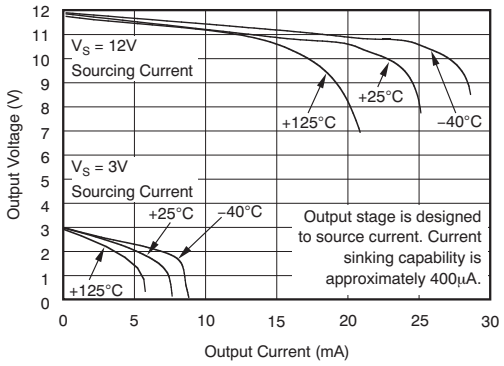

Figure 7. Positive Output Voltage Swing vs Output Current

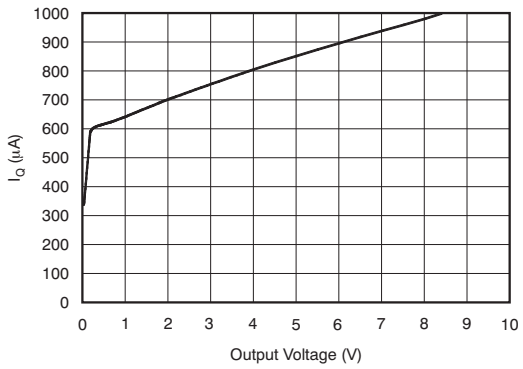

Figure 8. Quiescent Current vs Output Voltage

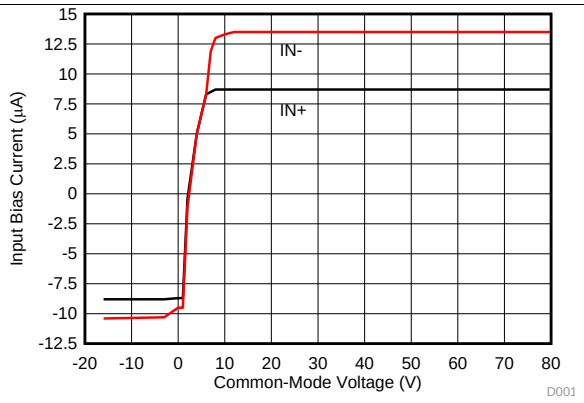

Figure 9. Input Bias Current vs Common Mode Voltage Vs=5 V

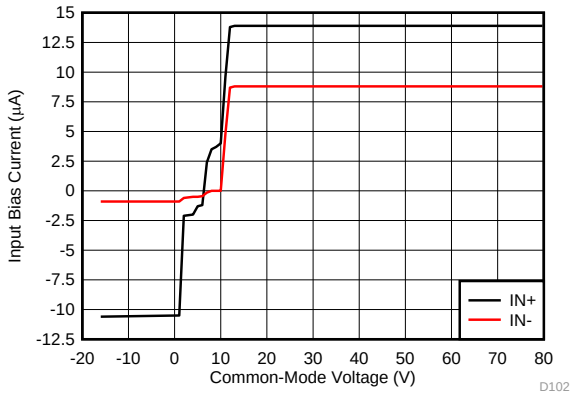

Figure 10. Input Bias Current vs Common Mode Voltage Vs=12 V

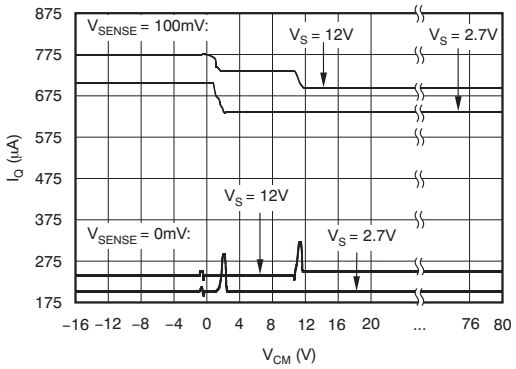

Figure 11. Quiescent Current vs Common-Mode Voltage

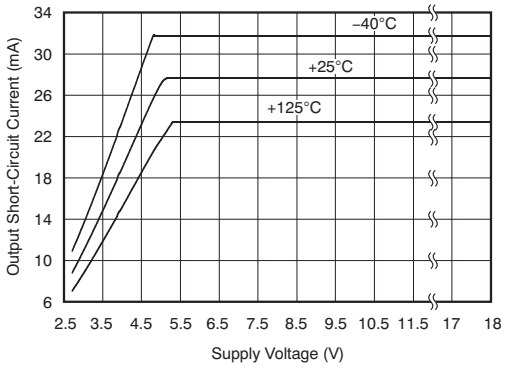

Figure 12. Output Short-Circuit Current vs Supply Voltage

Copyright © 2004–2015, Texas Instruments Incorporated

원문: ina196.pdf (media.ncd.io) · 제조사 원문 자료입니다. 사양은 제조사 사정에 따라 변경될 수 있습니다.

TESSOL Technical Library
TS-TL-NCD-029
we measure, we calibrate, we validate.
㈜테솔 · www.tessol.com TS-TL-NCD-029 8 / 32
KOLAS 국제공인교정기관 · ISO/IEC 17025

Typical Characteristics (continued)

All specifications at T_A = 25°C, V_S = 12 V, and V_{IN+} = 12 V, and V_{SENSE} = 100 mV, unless otherwise noted.

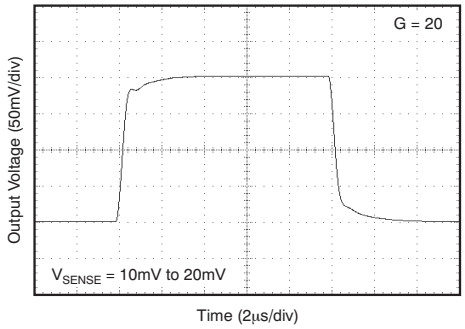

Figure 13. Step Response

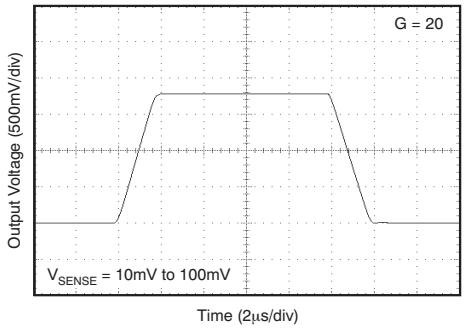

Figure 14. Step Response

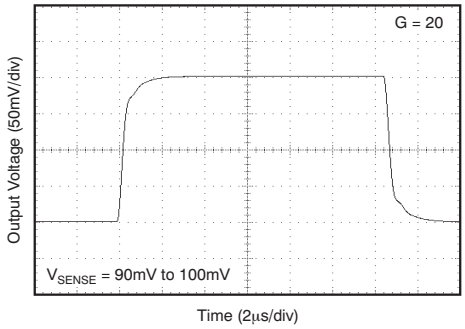

Figure 15. Step Response

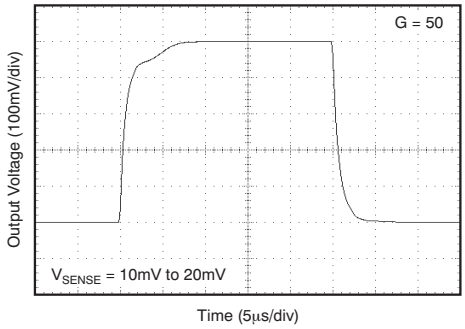

Figure 16. Step Response

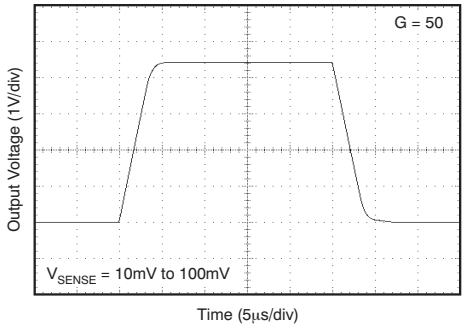

Figure 17. Step Response

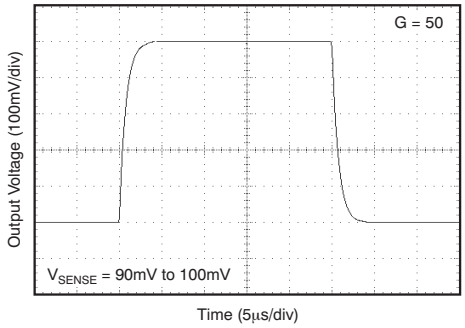

Figure 18. Step Response

원문: ina196.pdf (media.ncd.io) · 제조사 원문 자료입니다. 사양은 제조사 사정에 따라 변경될 수 있습니다.

Typical Characteristics (continued)

All specifications at T_A = 25°C, V_S = 12 V, and V_{IN+} = 12 V, and V_{SENSE} = 100 mV, unless otherwise noted.

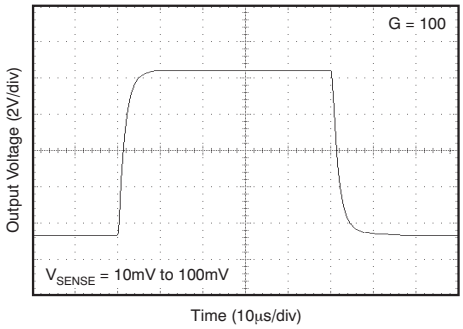

Figure 19. Step Response

Copyright © 2004–2015, Texas Instruments Incorporated

원문: ina196.pdf (media.ncd.io) · 제조사 원문 자료입니다. 사양은 제조사 사정에 따라 변경될 수 있습니다.

TESSOL Technical Library
TS-TL-NCD-029
we measure, we calibrate, we validate.
㈜테솔 · www.tessol.com TS-TL-NCD-029 10 / 32
KOLAS 국제공인교정기관 · ISO/IEC 17025

8 Detailed Description

8.1 Overview

The INA193−INA198 family of current shunt monitors with voltage output can sense drops across shunts at common-mode voltages from −16 V to +80 V, independent of the INA19x supply voltage. They are available with three output voltage scales: 20 V/V, 50 V/V, and 100 V/V. The 500-kHz bandwidth simplifies use in current control loops. The INA193−INA195 devices provide identical functions but alternative pin configurations to the INA196−INA198, respectively.

The INA193−INA198 devices operate from a single +2.7-V to +18-V supply, drawing a maximum of 900 µA of supply current. They are specified over the extended operating temperature range (−40°C to +125°C), and are offered in a space-saving SOT-23 package.

8.2 Functional Block Diagram

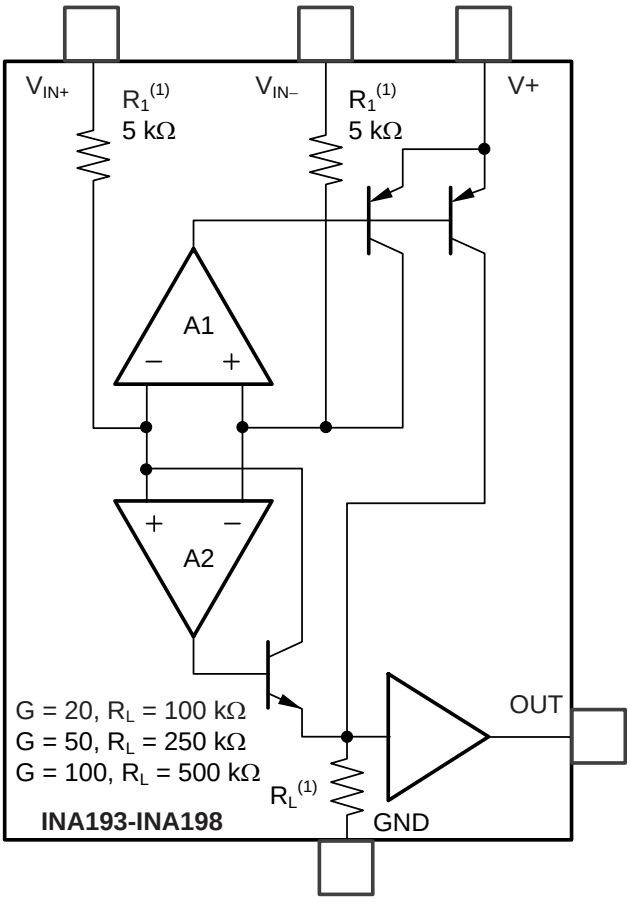

원문: ina196.pdf (media.ncd.io) · 제조사 원문 자료입니다. 사양은 제조사 사정에 따라 변경될 수 있습니다.

we measure, we calibrate, we validate.
㈜테솔 · www.tessol.com TS-TL-NCD-029 11 / 32
KOLAS 국제공인교정기관 · ISO/IEC 17025

TS-TL-NCD-029

8.3 Feature Description

8.3.1 Basic Connection

Figure 20 shows the basic connection of the INA193-INA198. To minimize any resistance in series with the shunt resistance, connect the input pins, V_{IN+} and V_{IN-}, as closely as possible to the shunt resistor.

Power-supply bypass capacitors are required for stability. Applications with noisy or high impedance power supplies may require additional decoupling capacitors to reject power-supply noise. Connect bypass capacitors close to the device pins.

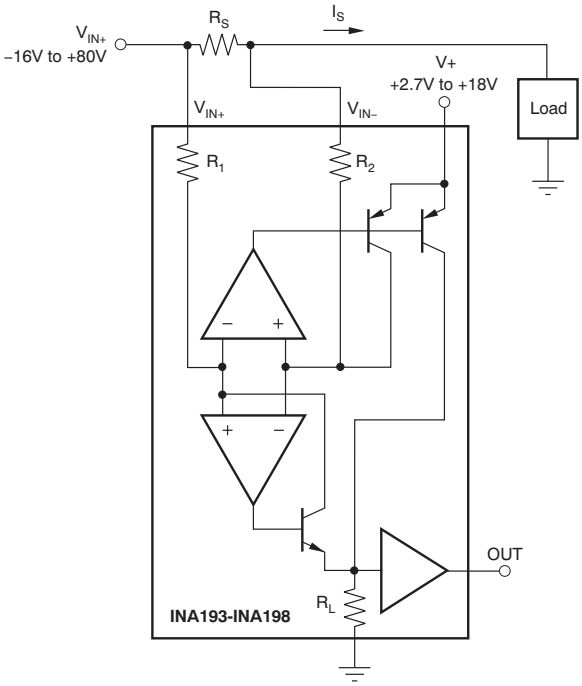

Figure 20. INA193-INA198 Basic Connection

8.3.2 Selecting R_S

The value chosen for the shunt resistor, R_S, depends on the application and is a compromise between small-signal accuracy and maximum permissible voltage loss in the measurement line. High values of R_S provide better accuracy at lower currents by minimizing the effects of offset, while low values of R_S minimize voltage loss in the supply line. For most applications, best performance is attained with an R_S value that provides a full-scale shunt voltage range of 50 mV to 100 mV. Maximum input voltage for accurate measurements is 500 mV.

8.3.3 Inside the INA193-INA198

The INA193-INA198 devices use a new, unique internal circuit topology that provides common-mode range extending from −16 to 80 V while operating from a single power supply. The common-mode rejection in a classic instrumentation amplifier approach is limited by the requirement for accurate resistor matching. By converting the induced input voltage to a current, the INA193-INA198 devices provide common-mode rejection that is no longer a function of closely matched resistor values, providing the enhanced performance necessary for such a wide common-mode range. A simplified diagram (shown in Figure 21) shows the basic circuit function. When the common-mode voltage is positive, amplifier A2 is active.

Copyright © 2004–2015, Texas Instruments Incorporated

원문: ina196.pdf (media.ncd.io) · 제조사 원문 자료입니다. 사양은 제조사 사정에 따라 변경될 수 있습니다.

TESSOL Technical Library
TS-TL-NCD-029
we measure, we calibrate, we validate.
㈜테솔 · www.tessol.com TS-TL-NCD-029 12 / 32
KOLAS 국제공인교정기관 · ISO/IEC 17025

Feature Description (continued)

The differential input voltage, $(V_{IN+}) - (V_{IN-})$ applied across R_S, is converted to a current through a resistor. This current is converted back to a voltage through R_L, and then amplified by the output buffer amplifier. When the common-mode voltage is negative, amplifier A1 is active. The differential input voltage, $(V_{IN+}) - (V_{IN-})$ applied across R_S, is converted to a current through a resistor. This current is sourced from a precision current mirror whose output is directed into R_L converting the signal back into a voltage and amplified by the output buffer amplifier. Patent-pending circuit architecture ensures smooth device operation, even during the transition period where both amplifiers A1 and A2 are active.

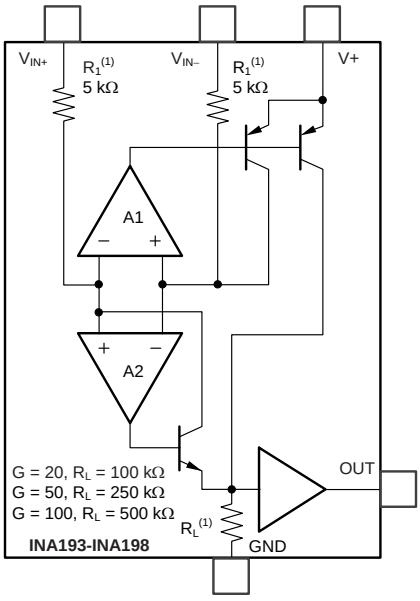

(1) Nominal resistor values are shown. ±15% variation is possible. Resistor ratios are matched to ±1%.

Figure 21. INA193-INA198 Simplified Circuit Diagram

원문: ina196.pdf (media.ncd.io) · 제조사 원문 자료입니다. 사양은 제조사 사정에 따라 변경될 수 있습니다.

we measure, we calibrate, we validate.
KOLAS 국제공인교정기관 · ISO/IEC 17025
㈜테솔 · www.tessol.com TS-TL-NCD-029 13 / 32

TS-TL-NCD-029

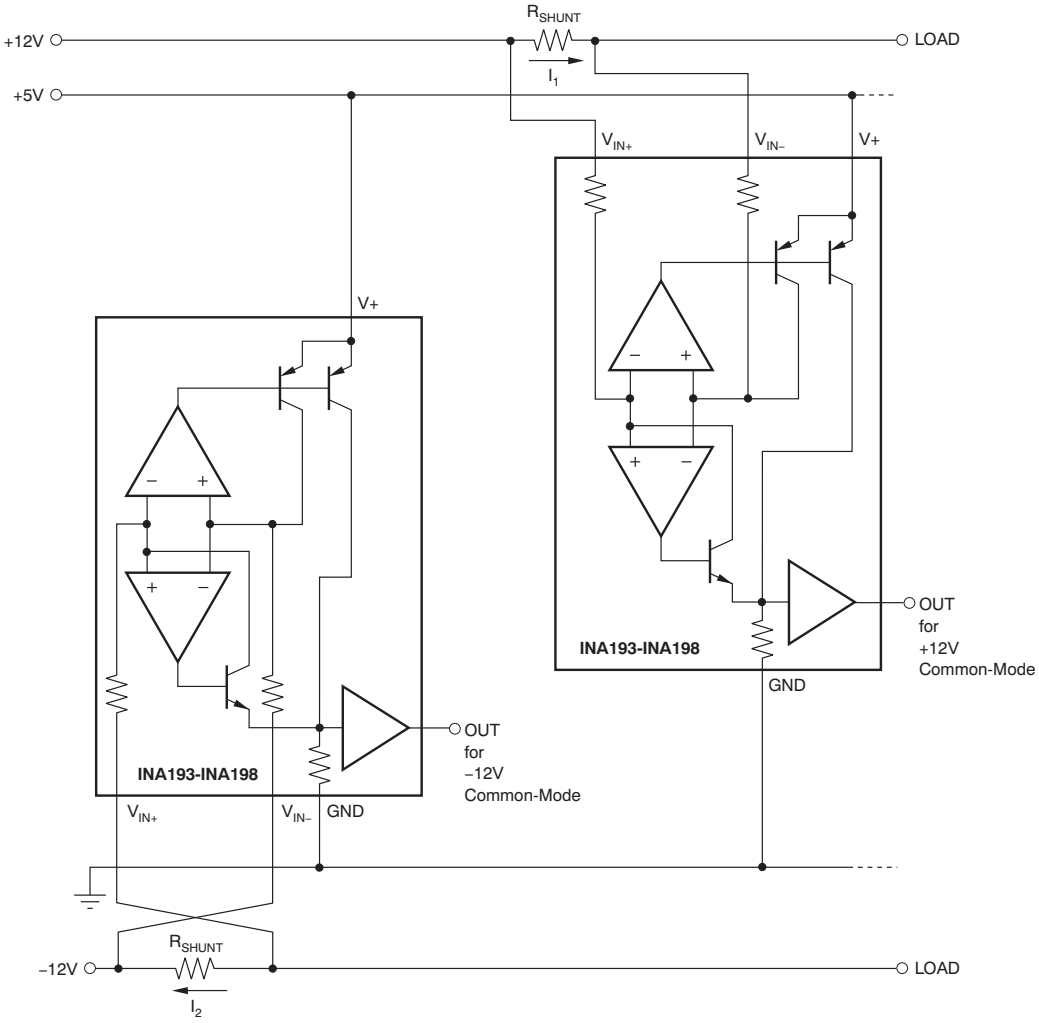

Figure 22. Monitor Bipolar Output Power-Supply Current

Copyright © 2004–2015, Texas Instruments Incorporated

원문: ina196.pdf (media.ncd.io) · 제조사 원문 자료입니다. 사양은 제조사 사정에 따라 변경될 수 있습니다.

TESSOL Technical Library
TS-TL-NCD-029
we measure, we calibrate, we validate.
㈜테솔 · www.tessol.com TS-TL-NCD-029 14 / 32
KOLAS 국제공인교정기관 · ISO/IEC 17025

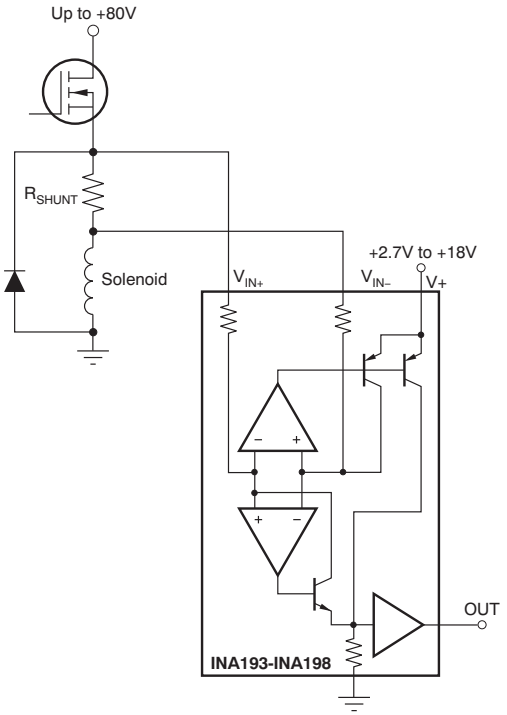

Figure 23. Inductive Current Monitor Including Flyback

원문: ina196.pdf (media.ncd.io) · 제조사 원문 자료입니다. 사양은 제조사 사정에 따라 변경될 수 있습니다.

we measure, we calibrate, we validate.
KOLAS 국제공인교정기관 · ISO/IEC 17025
㈜테솔 · www.tessol.com TS-TL-NCD-029 15 / 32

TS-TL-NCD-029

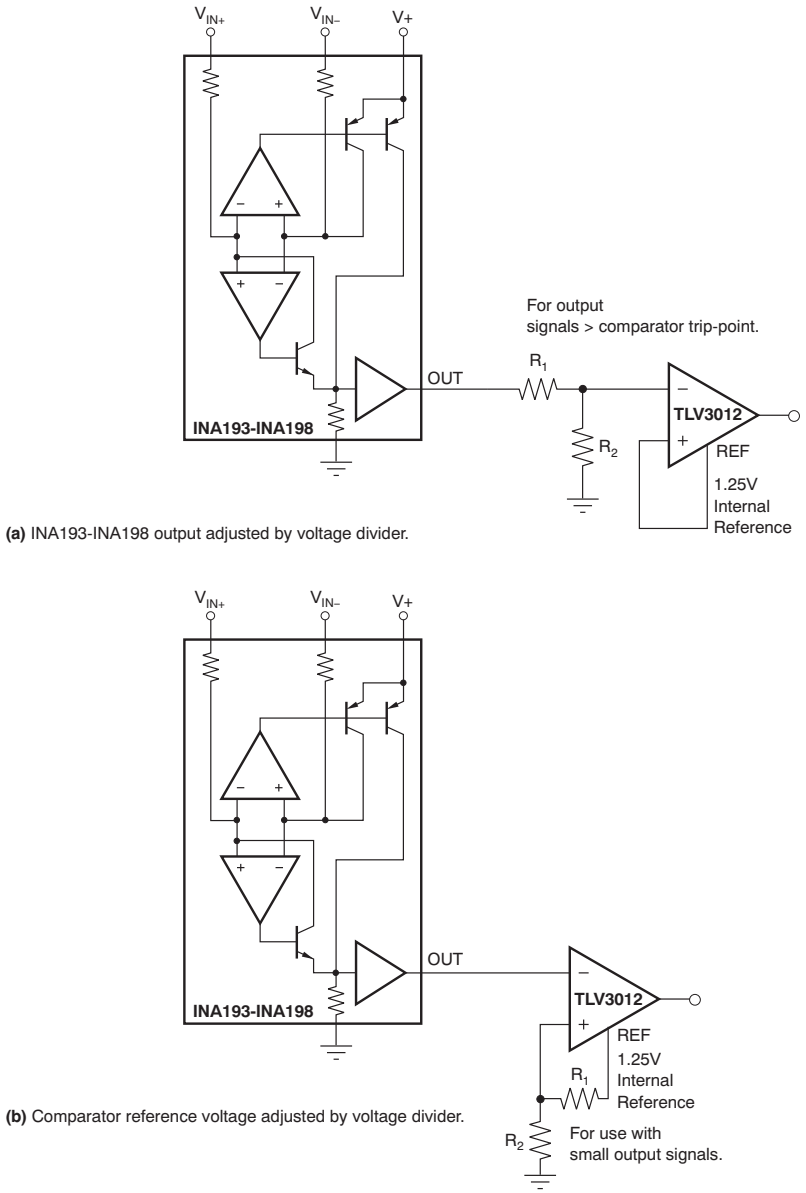

Figure 24. INA193-INA198 with Comparator

8.4 Device Functional Modes

8.4.1 Input Filtering

An obvious and straightforward location for filtering is at the output of the INA193-INA198 devices; however, this location negates the advantage of the low output impedance of the internal buffer. The only other option for filtering is at the input pins of the INA193-INA198 devices, which is complicated by the internal 5-kΩ + 30% input impedance; this is illustrated in Figure 25. Using the lowest possible resistor values minimizes both the initial shift in gain and effects of tolerance. The effect on initial gain is given by Equation 1:

Copyright © 2004–2015, Texas Instruments Incorporated

원문: ina196.pdf (media.ncd.io) · 제조사 원문 자료입니다. 사양은 제조사 사정에 따라 변경될 수 있습니다.

TESSOL Technical Library
TS-TL-NCD-029
we measure, we calibrate, we validate.
㈜테솔 · www.tessol.com TS-TL-NCD-029 16 / 32
KOLAS 국제공인교정기관 · ISO/IEC 17025

Device Functional Modes (continued)

$$\text{GainError\%} = 100 - \left(\frac{5k\Omega}{5k\Omega + R_{FILT}}\right) \times 100 \quad (1)$$

Total effect on gain error can be calculated by replacing the 5-kΩ term with 5 kΩ − 30%, (or 3.5 kΩ) or 5 kΩ + 30% (or 6.5 kΩ). The tolerance extremes of R_{FILT} can also be inserted into the equation. If a pair of 100-Ω 1% resistors are used on the inputs, the initial gain error will be approximately 2%. Worst-case tolerance conditions will always occur at the lower excursion of the internal 5-kΩ resistor (3.5 kΩ), and the higher excursion of R_{FILT} − 3% in this case.

Note that the specified accuracy of the INA193-INA198 devices must then be combined in addition to these tolerances. While this discussion treated accuracy worst-case conditions by combining the extremes of the resistor values, it is appropriate to use geometric mean or root sum square calculations to total the effects of accuracy variations.

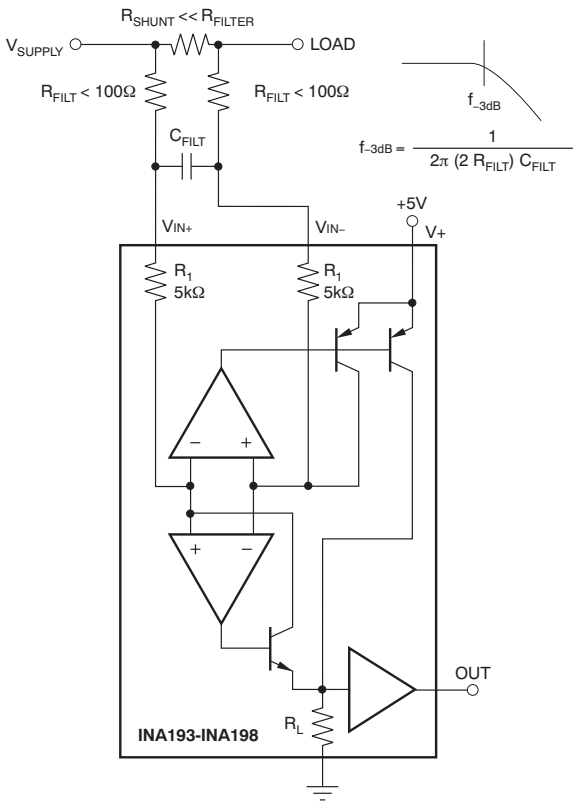

Figure 25. Input Filter (Gain Error − 1.5% To −2.2%)

8.4.2 Accuracy Variations as a Result of V_{SENSE} and Common-Mode Voltage

The accuracy of the INA193−INA198 current shunt monitors is a function of two main variables: V_{SENSE} (V_{IN+} − V_{IN-}) and common-mode voltage, V_{CM}, relative to the supply voltage, V_S. V_{CM} is expressed as (V_{IN+} + V_{IN-})/2; however, in practice, V_{CM} is seen as the voltage at V_{IN+} because the voltage drop across V_{SENSE} is usually small.

This section addresses the accuracy of these specific operating regions:

Normal Case 1: $V_{SENSE} \geq 20mV$, $V_{CM} \geq V_S$
Normal Case 2: $V_{SENSE} \geq 20mV$, $V_{CM} < V_S$
Low V_{SENSE} Case 1: $V_{SENSE} < 20mV$, $-16V \leq V_{CM} < 0$
Low V_{SENSE} Case 2: $V_{SENSE} < 20mV$, $0V \leq V_{CM} \leq V_S$

원문: ina196.pdf (media.ncd.io) · 제조사 원문 자료입니다. 사양은 제조사 사정에 따라 변경될 수 있습니다.

Device Functional Modes (continued)

Low V_{SENSE} Case 3: V_{SENSE} < 20mV, V_S < V_{CM} ≤ 80V

8.4.2.1 Normal Case 1: V_{SENSE} ≥ 20mv, V_{CM} ≥ V_S

This region of operation provides the highest accuracy. Here, the input offset voltage is characterized and measured using a two-step method. First, the gain is determined by Equation 2.

$$G = \frac{V_{OUT1} - V_{OUT2}}{100mV - 20mV}$$

where:

V_{OUT1} = Output Voltage with V_{SENSE} = 100mV
V_{OUT2} = Output Voltage with V_{SENSE} = 20mV (2)

Then the offset voltage is measured at V_{SENSE} = 100mV and referred to the input (RTI) of the current shunt monitor, as shown in Equation 3.

$$V_{OS}RTI\ (Referred\text{-}To\text{-}Input) = \left(\frac{V_{OUT1}}{G}\right) - 100mV \quad (3)$$

In the *Typical Characteristics*, the *Output Error vs Common-Mode Voltage* curve (Figure 6) shows the highest accuracy for this region of operation. In this plot, V_S = 12 V; for V_{CM} ≥ 12 V, the output error is at its minimum. This case is also used to create the V_{SENSE} ≥ 20-mV output specifications in the *Electrical Characteristics* table.

8.4.2.2 Normal Case 2: V_{SENSE} ≥ 20mv, V_{CM} < V_S

This region of operation has slightly less accuracy than Normal Case 1 as a result of the common-mode operating area in which the part functions, as seen in the *Output Error vs Common-Mode Voltage* curve (Figure 6). As noted, for this graph V_S = 12 V; for V_{CM} < 12 V, the Output Error increases as V_{CM} becomes less than 12 V, with a typical maximum error of 0.005% at the most negative V_{CM} = −16V.

Copyright © 2004–2015, Texas Instruments Incorporated

원문: ina196.pdf (media.ncd.io) · 제조사 원문 자료입니다. 사양은 제조사 사정에 따라 변경될 수 있습니다.

TESSOL Technical Library
TS-TL-NCD-029
we measure, we calibrate, we validate.
㈜테솔 · www.tessol.com TS-TL-NCD-029 18 / 32
KOLAS 국제공인교정기관 · ISO/IEC 17025

Device Functional Modes (continued)

8.4.2.3 Low V_{SENSE} Case 1: V_{SENSE} < 20mV, −16v ≤ V_{CM} < 0; and Low V_{SENSE} Case 3: V_{SENSE} < 20mV, V_S < V_{CM} ≤ 80V

Although the INA193−INA198 family of devices are not designed for accurate operation in either of these regions, some applications are exposed to these conditions; for example, when monitoring power supplies that are switched on and off while V_S is still applied to the INA193−INA198 devices. It is important to know what the behavior of the devices will be in these regions.

As V_{SENSE} approaches 0 mV, in these V_{CM} regions, the device output accuracy degrades. A larger-than-normal offset can appear at the current shunt monitor output with a typical maximum value of V_{OUT} = 300 mV for V_{SENSE} = 0 mV. As V_{SENSE} approaches 20 mV, V_{OUT} returns to the expected output value with accuracy as specified in the *Electrical Characteristics*. Figure 26 illustrates this effect using the INA195 and INA198 devices (Gain = 100).

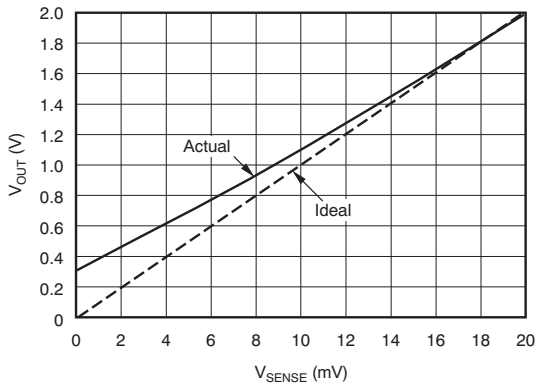

Figure 26. Example for Low V_{SENSE} Cases 1 and 3 (INA195, INA198: Gain = 100)

8.4.2.4 Low V_{SENSE} Case 2: V_{SENSE} < 20 mV, 0 V ≤ V_{CM} ≤ V_S

This region of operation is the least accurate for the INA193−INA198 family of devices. To achieve the wide input common-mode voltage range, these devices use two op amp front ends in parallel. One op amp front end operates in the positive input common-mode voltage range, and the other in the negative input region. For this case, neither of these two internal amplifiers dominates and overall loop gain is very low. Within this region, V_{OUT} approaches voltages close to linear operation levels for Normal Case 2. This deviation from linear operation becomes greatest the closer V_{SENSE} approaches 0 V. Within this region, as V_{SENSE} approaches 20 mV, device operation is closer to that described by Normal Case 2. Figure 27 illustrates this behavior for the INA195 device. The V_{OUT} maximum peak for this case is tested by maintaining a constant V_S, setting V_{SENSE} = 0 mV and sweeping V_{CM} from 0 V to V_S. The exact V_{CM} at which V_{OUT} peaks during this test varies from part to part, but the V_{OUT} maximum peak is tested to be less than the specified V_{OUT} Tested Limit.

원문: ina196.pdf (media.ncd.io) · 제조사 원문 자료입니다. 사양은 제조사 사정에 따라 변경될 수 있습니다.

TS-TL-NCD-029

we measure, we calibrate, we validate.
㈜테솔 · www.tessol.com TS-TL-NCD-029 19 / 32
KOLAS 국제공인교정기관 · ISO/IEC 17025

Device Functional Modes (continued)

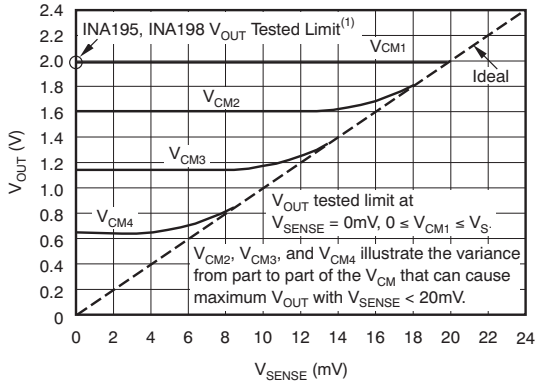

(1) INA193, INA196 V_{OUT} Tested Limit = 0.4V. INA194, INA197 V_{OUT} Tested Limit = 1V.

Figure 27. Example for Low V_{SENSE} Case 2 (INA195, INA198: Gain = 100)

8.4.3 Shutdown

Because the INA193-INA198 devices consume a quiescent current less than 1 mA, they can be powered by either the output of logic gates or by transistor switches to supply power. Use a totem-pole output buffer or gate that can provide sufficient drive along with 0.1-µF bypass capacitor, preferably ceramic with good high-frequency characteristics. This gate should have a supply voltage of 3 V or greater because the INA193-INA198 devices require a minimum supply greater than 2.7 V. In addition to eliminating quiescent current, this gate also turns off the 10-µA bias current present at each of the inputs. An example shutdown circuit is shown in Figure 28.

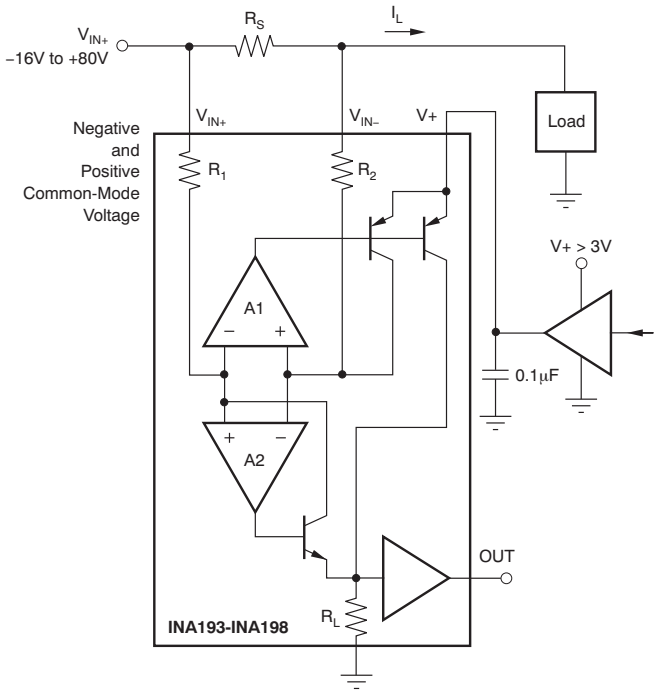

Figure 28. INA193-INA198 Example Shutdown Circuit

Copyright © 2004–2015, Texas Instruments Incorporated

원문: ina196.pdf (media.ncd.io) · 제조사 원문 자료입니다. 사양은 제조사 사정에 따라 변경될 수 있습니다.

TESSOL Technical Library
TS-TL-NCD-029
we measure, we calibrate, we validate.
㈜테솔 · www.tessol.com TS-TL-NCD-029 20 / 32
KOLAS 국제공인교정기관 · ISO/IEC 17025

Device Functional Modes (continued)

8.4.4 Transient Protection

The −16-V to +80-V common-mode range of the INA193-INA198 devices is ideal for withstanding automotive fault conditions ranging from 12-V battery reversal up to 80-V transients, since no additional protective components are needed up to those levels. In the event that the INA193-INA198 devices are exposed to transients on the inputs in excess of its ratings, then external transient absorption with semiconductor transient absorbers (zeners or Transzorbs) will be necessary. Use of MOVs or VDRs is not recommended except when they are used in addition to a semiconductor transient absorber. Select the transient absorber such that it will never allow the INA193-INA198 devices to be exposed to transients greater than +80 V (that is, allow for transient absorber tolerance, as well as additional voltage due to transient absorber dynamic impedance). Despite the use of internal zener-type ESD protection, the INA193-INA198 devices do not lend themselves to using external resistors in series with the inputs because the internal gain resistors can vary up to ±30%. (If gain accuracy is not important, then resistors can be added in series with the INA193-INA198 inputs with two equal resistors on each input.)

8.4.5 Output Voltage Range

The output of the INA193-INA198 devices are accurate within the output voltage swing range set by the power-supply pin, V+. This is best illustrated when using the INA195 or INA198 devices (which are both versions using a gain of 100), where a 100-mV full-scale input from the shunt resistor requires an output voltage swing of +10 V, and a power-supply voltage sufficient to achieve +10 V on the output.

Copyright © 2004–2015, Texas Instruments Incorporated

원문: ina196.pdf (media.ncd.io) · 제조사 원문 자료입니다. 사양은 제조사 사정에 따라 변경될 수 있습니다.

9 Application and Implementation

NOTE

Information in the following applications sections is not part of the TI component specification, and TI does not warrant its accuracy or completeness. TI's customers are responsible for determining suitability of components for their purposes. Customers should validate and test their design implementation to confirm system functionality.

9.1 Application Information

The INA193-INA198 devices measure the voltage developed across a current-sensing resistor when current passes through it. The ability to have shunt common-mode voltages from −16-V to +80-V drive and control the output signal with Vs offers multiple configurations, as discussed throughout this section.

9.2 Typical Application

The device is a unidirectional, current-sense amplifier capable of measuring currents through a resistive shunt with shunt common-mode voltages from −16 V to 80 V. Two devices can be configured for bidirectional monitoring and is common in applications that include charging and discharging operations where the current flow-through resistor can change directions.

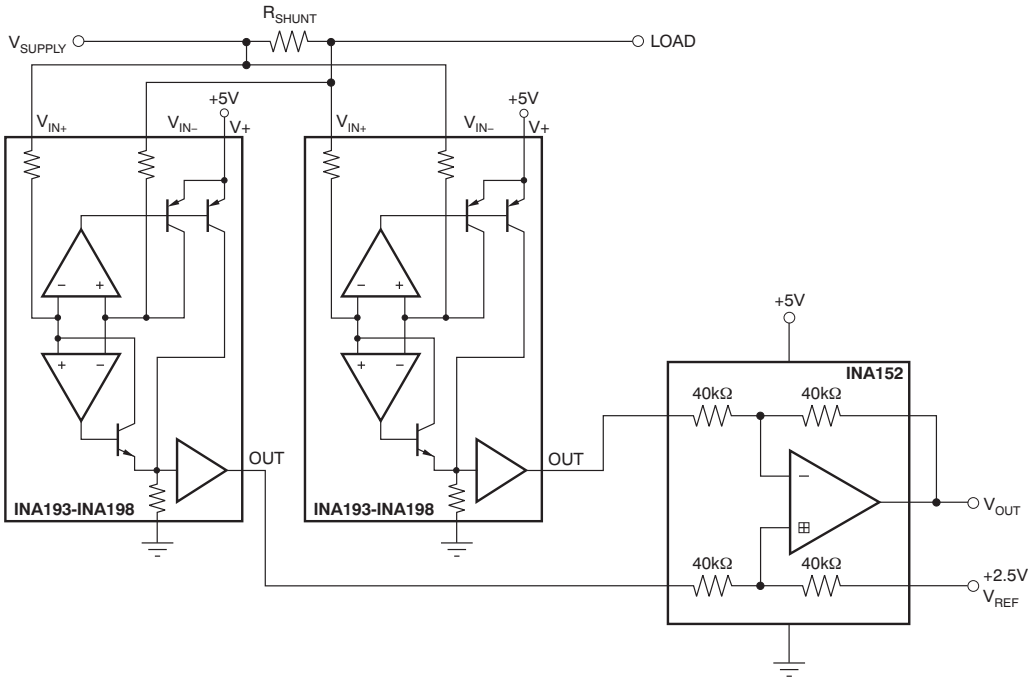

Figure 29. Bi-Directional Current Monitoring

9.2.1 Design Requirements

Vsupply is set to 12 V, Vref at 2.5 V and a 10-mΩ shunt. The accuracy of the current will typically be less than 0.5% for current greater than ±2 A. For current lower than ±2 A, the accuracy will vary; use the *Device Functional Modes* section for accuracy considerations.

Copyright © 2004–2015, Texas Instruments Incorporated

원문: ina196.pdf (media.ncd.io) · 제조사 원문 자료입니다. 사양은 제조사 사정에 따라 변경될 수 있습니다.

TESSOL Technical Library
TS-TL-NCD-029
we measure, we calibrate, we validate.
㈜테솔 · www.tessol.com TS-TL-NCD-029 22 / 32
KOLAS 국제공인교정기관 · ISO/IEC 17025

Typical Application (continued)

9.2.2 Detailed Design Procedure

The ability to measure this current flowing in both directions is enabled by adding a unity gain amplifier with a V_{REF}, as shown in Figure 29. The output then responds by increasing above VREF for positive differential signals (relative to the IN – pin) and responds by decreasing below VREF for negative differential signals. This reference voltage applied to the REF pin can be set anywhere between 0 V to V+. For bidirectional applications, VREF is typically set at mid- scale for equal signal range in both current directions. In some cases, however, VREF is set at a voltage other than mid-scale when the bidirectional current and corresponding output signal do not need to be symmetrical.

9.2.3 Application Curve

An example output response of a bidirectional configuration is shown in Figure 30. With the REF pin connected to a reference voltage, 2.5 V in this case, the output voltage is biased upwards by this reference level. The output rises above the reference voltage for positive differential input signals and falls below the reference voltage for negative differential input signals.

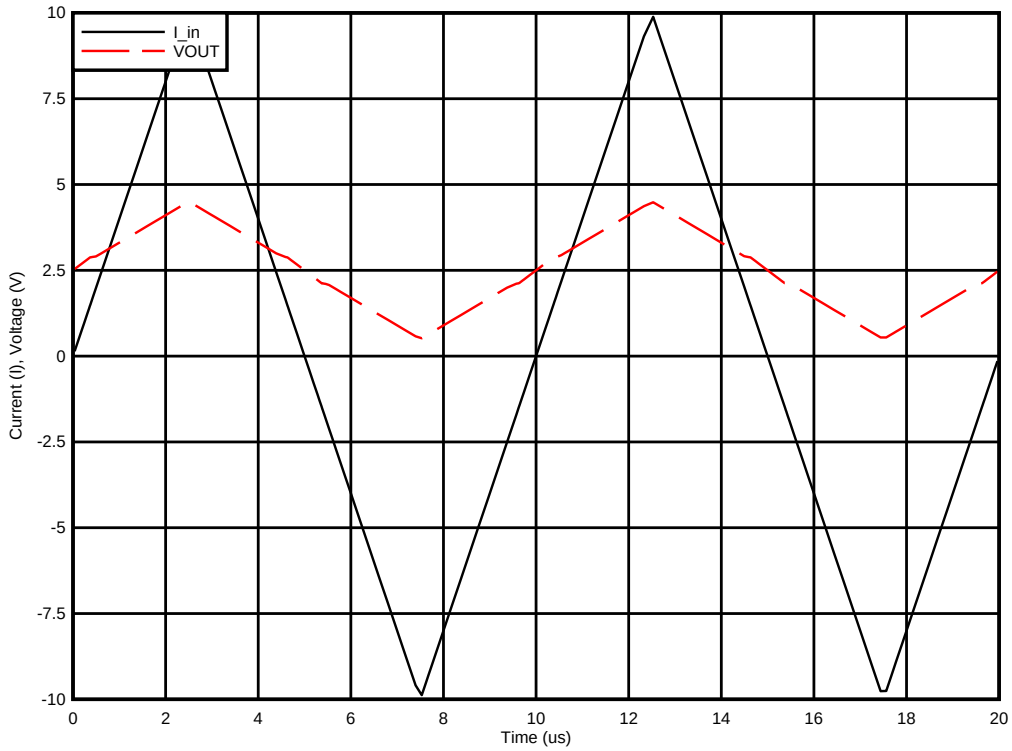

Figure 30. Output Voltage vs Shunt Input Current

10 Power Supply Recommendations

The input circuitry of the INA193-INA198 devices can accurately measure beyond its power-supply voltage, V+. For example, the V+ power supply can be 5 V, whereas the load power-supply voltage is up to 80 V. The output voltage range of the OUT terminal, however, is limited by the voltages on the power-supply pin.

원문: ina196.pdf (media.ncd.io) · 제조사 원문 자료입니다. 사양은 제조사 사정에 따라 변경될 수 있습니다.

TS-TL-NCD-029

we measure, we calibrate, we validate.
㈜테솔 · www.tessol.com TS-TL-NCD-029 23 / 32
KOLAS 국제공인교정기관 · ISO/IEC 17025

11 Layout

11.1 Layout Guidelines

11.1.1 RFI and EMI

Attention to good layout practices is always recommended. Keep traces short and, when possible, use a printed circuit board (PCB) ground plane with surface-mount components placed as close to the device pins as possible. Small ceramic capacitors placed directly across amplifier inputs can reduce RFI/EMI sensitivity. PCB layout should locate the amplifier as far away as possible from RFI sources. Sources can include other components in the same system as the amplifier itself, such as inductors (particularly switched inductors handling a lot of current and at high frequencies). RFI can generally be identified as a variation in offset voltage or DC signal levels with changes in the interfering RF signal. If the amplifier cannot be located away from sources of radiation, shielding may be needed. Twisting wire input leads makes them more resistant to RF fields. The difference in input pin location of the INA193-INA195 devices versus the INA196-INA198 devices may provide different EMI performance.

11.2 Layout Example

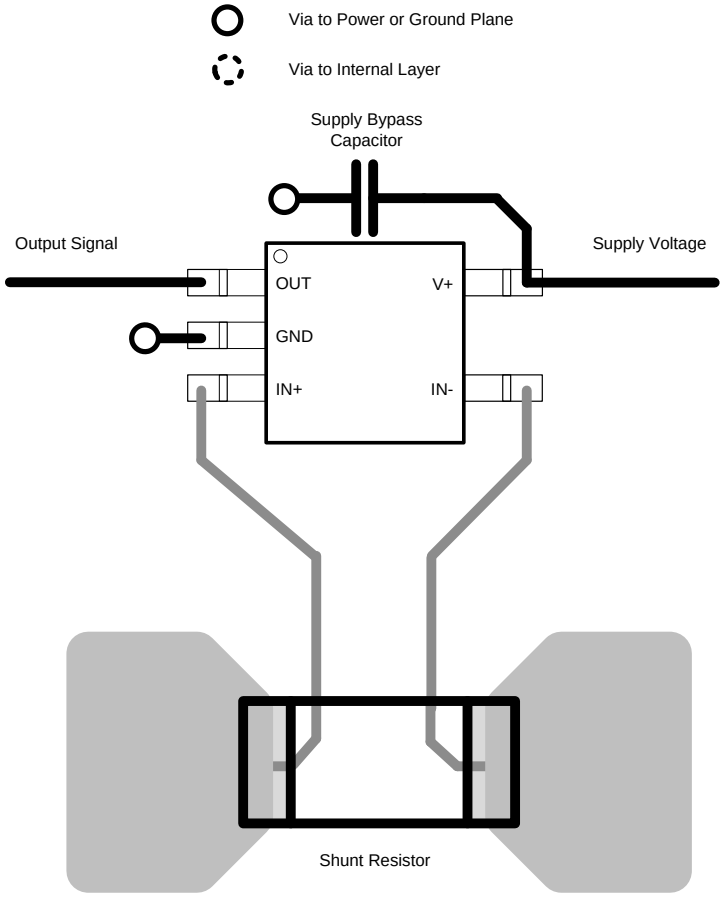

Figure 31. Recommended Layout

Copyright © 2004–2015, Texas Instruments Incorporated

원문: ina196.pdf (media.ncd.io) · 제조사 원문 자료입니다. 사양은 제조사 사정에 따라 변경될 수 있습니다.

TESSOL Technical Library
TS-TL-NCD-029
we measure, we calibrate, we validate.
㈜테솔 · www.tessol.com TS-TL-NCD-029 24 / 32
KOLAS 국제공인교정기관 · ISO/IEC 17025

12 Device and Documentation Support

12.1 Related Links

The table below lists quick access links. Categories include technical documents, support and community resources, tools and software, and quick access to sample or buy.

Table 1. Related Links

PARTS	PRODUCT FOLDER	SAMPLE & BUY	TECHNICAL DOCUMENTS	TOOLS & SOFTWARE	SUPPORT & COMMUNITY
INA193	Click here	Click here	Click here	Click here	Click here
INA194	Click here	Click here	Click here	Click here	Click here
INA195	Click here	Click here	Click here	Click here	Click here
INA196	Click here	Click here	Click here	Click here	Click here
INA197	Click here	Click here	Click here	Click here	Click here
INA198	Click here	Click here	Click here	Click here	Click here

12.2 Trademarks

All trademarks are the property of their respective owners.

12.3 Electrostatic Discharge Caution

These devices have limited built-in ESD protection. The leads should be shorted together or the device placed in conductive foam during storage or handling to prevent electrostatic damage to the MOS gates.

12.4 Glossary

SLYZ022 — *TI Glossary*.

This glossary lists and explains terms, acronyms, and definitions.

13 Mechanical, Packaging, and Orderable Information

The following pages include mechanical, packaging, and orderable information. This information is the most current data available for the designated devices. This data is subject to change without notice and revision of this document. For browser-based versions of this data sheet, refer to the left-hand navigation.

원문: ina196.pdf (media.ncd.io) · 제조사 원문 자료입니다. 사양은 제조사 사정에 따라 변경될 수 있습니다.

we measure, we calibrate, we validate.
KOLAS 국제공인교정기관 · ISO/IEC 17025

TEXAS INSTRUMENTS

www.ti.com

PACKAGE OPTION ADDENDUM

23-Mar-2016

PACKAGING INFORMATION

Orderable Device	Status (1)	Package Type	Package Drawing	Pins	Package Qty	Eco Plan (2)	Lead/Ball Finish (6)	MSL Peak Temp (3)	Op Temp (°C)	Device Marking (4/5)	Samples
INA193AIDBVR	ACTIVE	SOT-23	DBV	5	3000	Green (RoHS & no Sb/Br)	CU NIPDAU	Level-2-260C-1 YEAR	-40 to 125	BJJ	Samples
INA193AIDBVT	ACTIVE	SOT-23	DBV	5	250	Green (RoHS & no Sb/Br)	CU NIPDAU	Level-2-260C-1 YEAR	-40 to 125	BJJ	Samples
INA194AIDBVR	ACTIVE	SOT-23	DBV	5	3000	Green (RoHS & no Sb/Br)	CU NIPDAU	Level-2-260C-1 YEAR	-40 to 125	BJI	Samples
INA194AIDBVT	ACTIVE	SOT-23	DBV	5	250	Green (RoHS & no Sb/Br)	CU NIPDAU	Level-2-260C-1 YEAR	-40 to 125	BJI	Samples
INA195AIDBVR	ACTIVE	SOT-23	DBV	5	3000	Green (RoHS & no Sb/Br)	CU NIPDAU	Level-2-260C-1 YEAR	-40 to 125	BJK	Samples
INA195AIDBVT	ACTIVE	SOT-23	DBV	5	250	Green (RoHS & no Sb/Br)	CU NIPDAU	Level-2-260C-1 YEAR	-40 to 125	BJK	Samples
INA196AIDBVR	ACTIVE	SOT-23	DBV	5	3000	Green (RoHS & no Sb/Br)	CU NIPDAU	Level-2-260C-1 YEAR	-40 to 125	BJE	Samples
INA196AIDBVT	ACTIVE	SOT-23	DBV	5	250	Green (RoHS & no Sb/Br)	CU NIPDAU	Level-2-260C-1 YEAR	-40 to 125	BJE	Samples
INA197AIDBVR	ACTIVE	SOT-23	DBV	5	3000	Green (RoHS & no Sb/Br)	CU NIPDAU	Level-2-260C-1 YEAR	-40 to 125	BJH	Samples
INA197AIDBVT	ACTIVE	SOT-23	DBV	5	250	Green (RoHS & no Sb/Br)	CU NIPDAU	Level-2-260C-1 YEAR	-40 to 125	BJH	Samples
INA198AIDBVR	ACTIVE	SOT-23	DBV	5	3000	Green (RoHS & no Sb/Br)	CU NIPDAU	Level-2-260C-1 YEAR	-40 to 125	BJL	Samples
INA198AIDBVT	ACTIVE	SOT-23	DBV	5	250	Green (RoHS & no Sb/Br)	CU NIPDAU	Level-2-260C-1 YEAR	-40 to 125	BJL	Samples

(1) The marketing status values are defined as follows:
ACTIVE: Product device recommended for new designs.
LIFEBUY: TI has announced that the device will be discontinued, and a lifetime-buy period is in effect.
NRND: Not recommended for new designs. Device is in production to support existing customers, but TI does not recommend using this part in a new design.
PREVIEW: Device has been announced but is not in production. Samples may or may not be available.
OBSOLETE: TI has discontinued the production of the device.

(2) Eco Plan - The planned eco-friendly classification: Pb-Free (RoHS), Pb-Free (RoHS Exempt), or Green (RoHS & no Sb/Br) - please check http://www.ti.com/productcontent for the latest availability information and additional product content details.
TBD: The Pb-Free/Green conversion plan has not been defined.

원문: ina196.pdf (media.ncd.io) · 제조사 원문 자료입니다. 사양은 제조사 사정에 따라 변경될 수 있습니다.

TEXAS INSTRUMENTS

www.ti.com

PACKAGE OPTION ADDENDUM

23-Mar-2016

Pb-Free (RoHS): TI's terms "Lead-Free" or "Pb-Free" mean semiconductor products that are compatible with the current RoHS requirements for all 6 substances, including the requirement that lead not exceed 0.1% by weight in homogeneous materials. Where designed to be soldered at high temperatures, TI Pb-Free products are suitable for use in specified lead-free processes.
Pb-Free (RoHS Exempt): This component has a RoHS exemption for either 1) lead-based flip-chip solder bumps used between the die and package, or 2) lead-based die adhesive used between the die and leadframe. The component is otherwise considered Pb-Free (RoHS compatible) as defined above.
Green (RoHS & no Sb/Br): TI defines "Green" to mean Pb-Free (RoHS compatible), and free of Bromine (Br) and Antimony (Sb) based flame retardants (Br or Sb do not exceed 0.1% by weight in homogeneous material)

(3) MSL, Peak Temp. - The Moisture Sensitivity Level rating according to the JEDEC industry standard classifications, and peak solder temperature.

(4) There may be additional marking, which relates to the logo, the lot trace code information, or the environmental category on the device.

(5) Multiple Device Markings will be inside parentheses. Only one Device Marking contained in parentheses and separated by a "~" will appear on a device. If a line is indented then it is a continuation of the previous line and the two combined represent the entire Device Marking for that device.

(6) Lead/Ball Finish - Orderable Devices may have multiple material finish options. Finish options are separated by a vertical ruled line. Lead/Ball Finish values may wrap to two lines if the finish value exceeds the maximum column width.

Important Information and Disclaimer: The information provided on this page represents TI's knowledge and belief as of the date that it is provided. TI bases its knowledge and belief on information provided by third parties, and makes no representation or warranty as to the accuracy of such information. Efforts are underway to better integrate information from third parties. TI has taken and continues to take reasonable steps to provide representative and accurate information but may not have conducted destructive testing or chemical analysis on incoming materials and chemicals. TI and TI suppliers consider certain information to be proprietary, and thus CAS numbers and other limited information may not be available for release.

In no event shall TI's liability arising out of such information exceed the total purchase price of the TI part(s) at issue in this document sold by TI to Customer on an annual basis.

원문: ina196.pdf (media.ncd.io) · 제조사 원문 자료입니다. 사양은 제조사 사정에 따라 변경될 수 있습니다.

PACKAGE MATERIALS INFORMATION

www.ti.com 5-Feb-2016

TAPE AND REEL INFORMATION

REEL DIMENSIONS

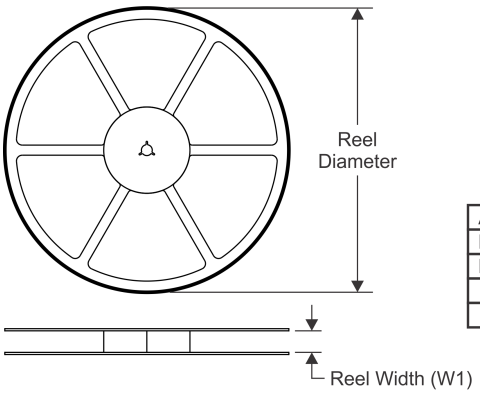

TAPE DIMENSIONS

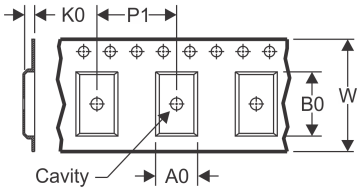

A0	Dimension designed to accommodate the component width
B0	Dimension designed to accommodate the component length
K0	Dimension designed to accommodate the component thickness
W	Overall width of the carrier tape
P1	Pitch between successive cavity centers

QUADRANT ASSIGNMENTS FOR PIN 1 ORIENTATION IN TAPE

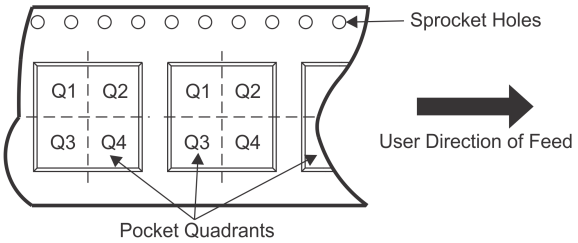

*All dimensions are nominal

Device	Package Type	Package Drawing	Pins	SPQ	Reel Diameter (mm)	Reel Width W1 (mm)	A0 (mm)	B0 (mm)	K0 (mm)	P1 (mm)	W (mm)	Pin1 Quadrant
INA193AIDBVR	SOT-23	DBV	5	3000	178.0	9.0	3.23	3.17	1.37	4.0	8.0	Q3
INA193AIDBVT	SOT-23	DBV	5	250	178.0	9.0	3.3	3.2	1.4	4.0	8.0	Q3
INA194AIDBVR	SOT-23	DBV	5	3000	178.0	9.0	3.23	3.17	1.37	4.0	8.0	Q3
INA194AIDBVT	SOT-23	DBV	5	250	178.0	9.0	3.3	3.2	1.4	4.0	8.0	Q3
INA195AIDBVR	SOT-23	DBV	5	3000	178.0	9.0	3.3	3.2	1.4	4.0	8.0	Q3
INA195AIDBVT	SOT-23	DBV	5	250	178.0	9.0	3.3	3.2	1.4	4.0	8.0	Q3
INA196AIDBVR	SOT-23	DBV	5	3000	178.0	9.0	3.3	3.2	1.4	4.0	8.0	Q3
INA196AIDBVT	SOT-23	DBV	5	250	178.0	9.0	3.3	3.2	1.4	4.0	8.0	Q3
INA197AIDBVR	SOT-23	DBV	5	3000	178.0	9.0	3.3	3.2	1.4	4.0	8.0	Q3
INA197AIDBVT	SOT-23	DBV	5	250	178.0	9.0	3.3	3.2	1.4	4.0	8.0	Q3
INA198AIDBVR	SOT-23	DBV	5	3000	178.0	9.0	3.3	3.2	1.4	4.0	8.0	Q3
INA198AIDBVT	SOT-23	DBV	5	250	178.0	9.0	3.23	3.17	1.37	4.0	8.0	Q3

원문: ina196.pdf (media.ncd.io) · 제조사 원문 자료입니다. 사양은 제조사 사정에 따라 변경될 수 있습니다.

PACKAGE MATERIALS INFORMATION

www.ti.com 5-Feb-2016

TAPE AND REEL BOX DIMENSIONS

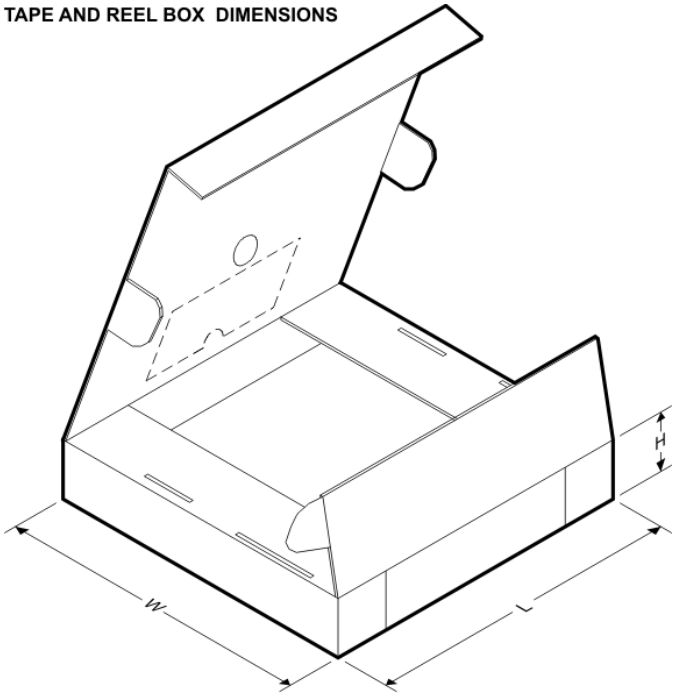

*All dimensions are nominal

Device	Package Type	Package Drawing	Pins	SPQ	Length (mm)	Width (mm)	Height (mm)
INA193AIDBVR	SOT-23	DBV	5	3000	180.0	180.0	18.0
INA193AIDBVT	SOT-23	DBV	5	250	180.0	180.0	18.0
INA194AIDBVR	SOT-23	DBV	5	3000	180.0	180.0	18.0
INA194AIDBVT	SOT-23	DBV	5	250	180.0	180.0	18.0
INA195AIDBVR	SOT-23	DBV	5	3000	180.0	180.0	18.0
INA195AIDBVT	SOT-23	DBV	5	250	180.0	180.0	18.0
INA196AIDBVR	SOT-23	DBV	5	3000	180.0	180.0	18.0
INA196AIDBVT	SOT-23	DBV	5	250	180.0	180.0	18.0
INA197AIDBVR	SOT-23	DBV	5	3000	180.0	180.0	18.0
INA197AIDBVT	SOT-23	DBV	5	250	180.0	180.0	18.0
INA198AIDBVR	SOT-23	DBV	5	3000	180.0	180.0	18.0
INA198AIDBVT	SOT-23	DBV	5	250	180.0	180.0	18.0

원문: ina196.pdf (media.ncd.io) · 제조사 원문 자료입니다. 사양은 제조사 사정에 따라 변경될 수 있습니다.

MECHANICAL DATA

DBV (R-PDSO-G5) PLASTIC SMALL-OUTLINE PACKAGE

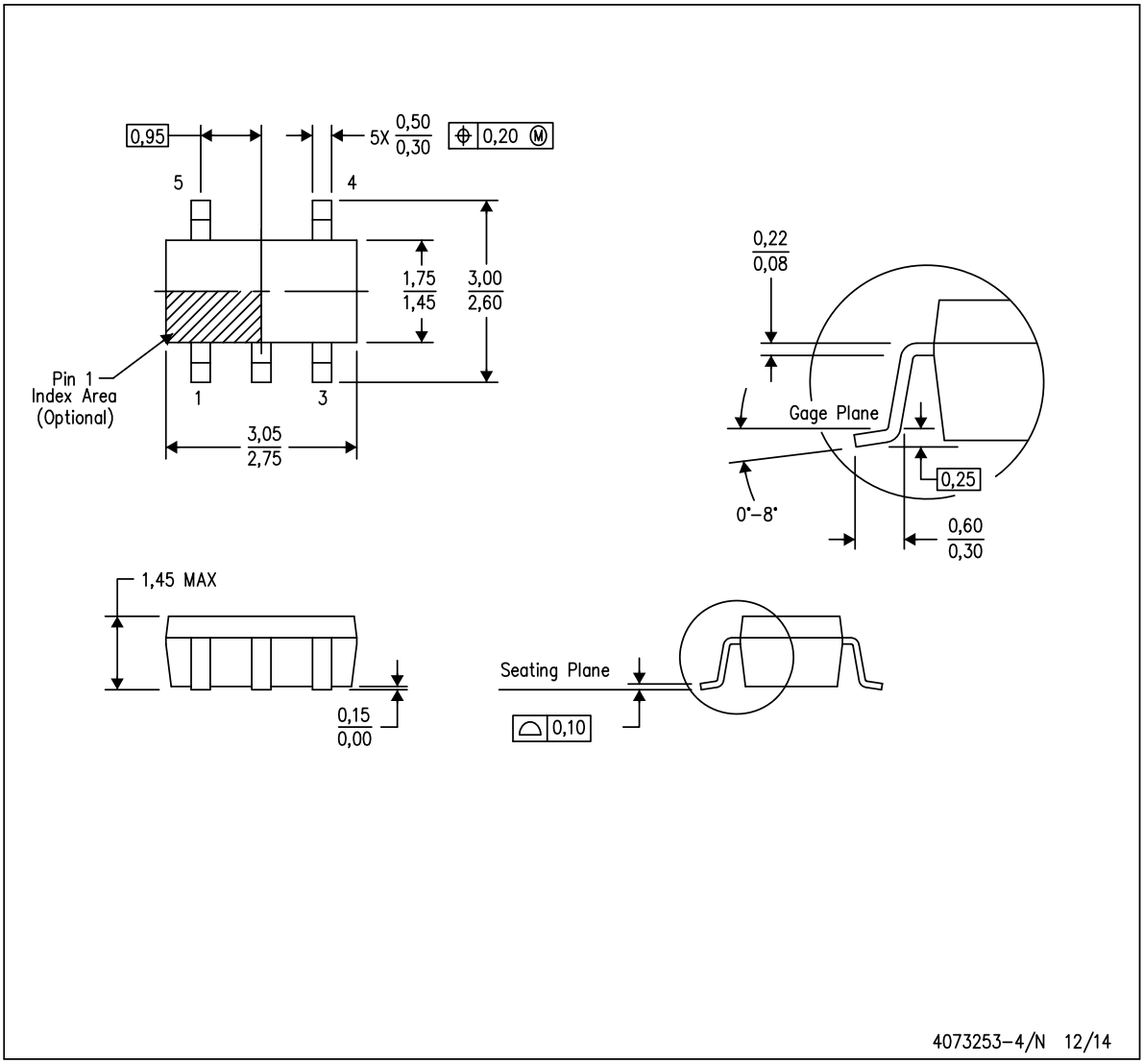

NOTES:
A. All linear dimensions are in millimeters.
B. This drawing is subject to change without notice.
C. Body dimensions do not include mold flash or protrusion. Mold flash and protrusion shall not exceed 0.15 per side.
D. Falls within JEDEC MO-178 Variation AA.

TEXAS INSTRUMENTS
www.ti.com

원문: ina196.pdf (media.ncd.io) · 제조사 원문 자료입니다. 사양은 제조사 사정에 따라 변경될 수 있습니다.

LAND PATTERN DATA

DBV (R-PDSO-G5) PLASTIC SMALL OUTLINE

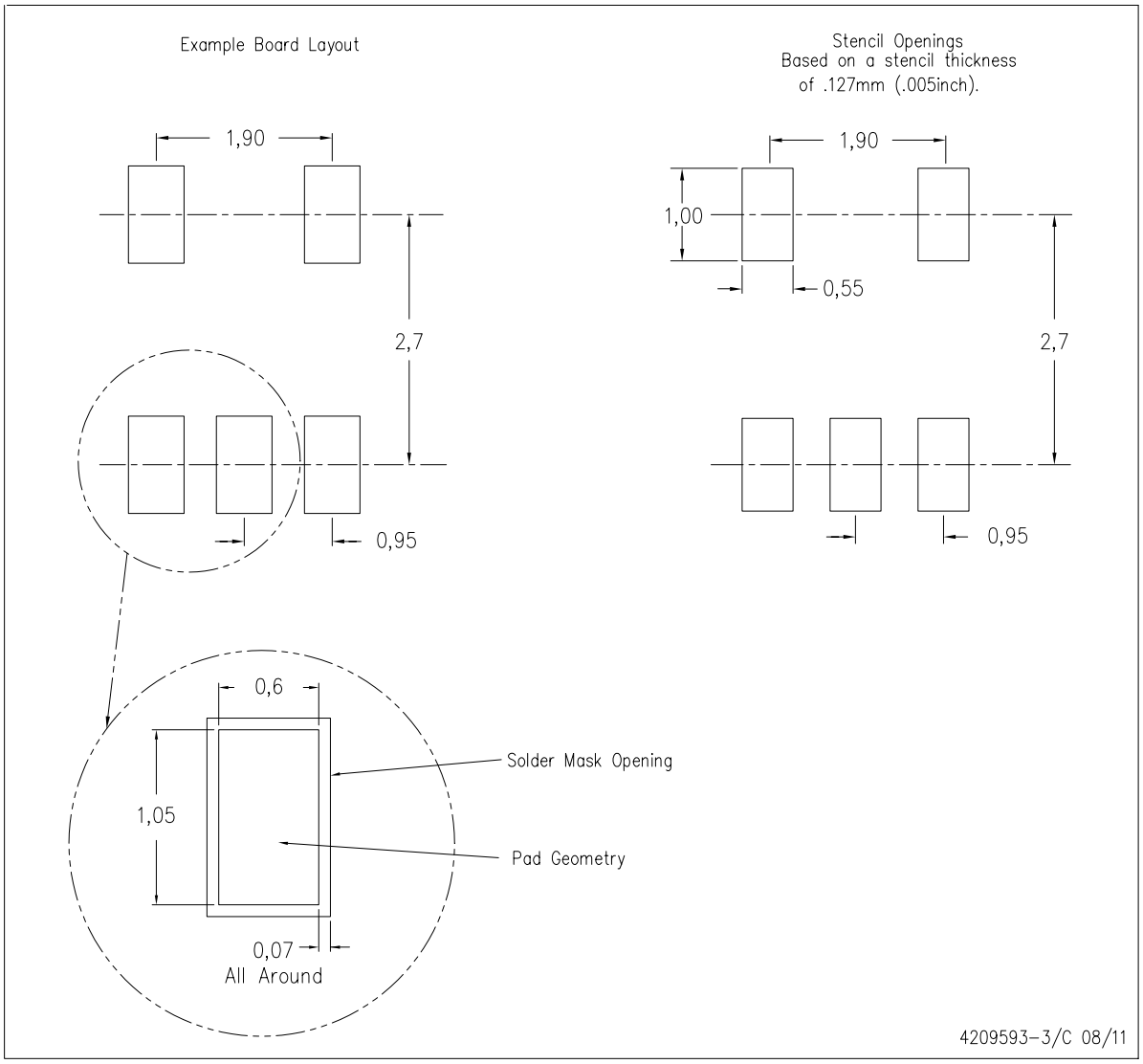

NOTES:
A. All linear dimensions are in millimeters.
B. This drawing is subject to change without notice.
C. Customers should place a note on the circuit board fabrication drawing not to alter the center solder mask defined pad.
D. Publication IPC-7351 is recommended for alternate designs.
E. Laser cutting apertures with trapezoidal walls and also rounding corners will offer better paste release. Customers should contact their board assembly site for stencil design recommendations. Example stencil design based on a 50% volumetric metal load solder paste. Refer to IPC-7525 for other stencil recommendations.

TEXAS INSTRUMENTS
www.ti.com

원문: ina196.pdf (media.ncd.io) · 제조사 원문 자료입니다. 사양은 제조사 사정에 따라 변경될 수 있습니다.

IMPORTANT NOTICE

Texas Instruments Incorporated and its subsidiaries (TI) reserve the right to make corrections, enhancements, improvements and other changes to its semiconductor products and services per JESD46, latest issue, and to discontinue any product or service per JESD48, latest issue. Buyers should obtain the latest relevant information before placing orders and should verify that such information is current and complete. All semiconductor products (also referred to herein as “components”) are sold subject to TI’s terms and conditions of sale supplied at the time of order acknowledgment.

TI warrants performance of its components to the specifications applicable at the time of sale, in accordance with the warranty in TI’s terms and conditions of sale of semiconductor products. Testing and other quality control techniques are used to the extent TI deems necessary to support this warranty. Except where mandated by applicable law, testing of all parameters of each component is not necessarily performed.

TI assumes no liability for applications assistance or the design of Buyers’ products. Buyers are responsible for their products and applications using TI components. To minimize the risks associated with Buyers’ products and applications, Buyers should provide adequate design and operating safeguards.

TI does not warrant or represent that any license, either express or implied, is granted under any patent right, copyright, mask work right, or other intellectual property right relating to any combination, machine, or process in which TI components or services are used. Information published by TI regarding third-party products or services does not constitute a license to use such products or services or a warranty or endorsement thereof. Use of such information may require a license from a third party under the patents or other intellectual property of the third party, or a license from TI under the patents or other intellectual property of TI.

Reproduction of significant portions of TI information in TI data books or data sheets is permissible only if reproduction is without alteration and is accompanied by all associated warranties, conditions, limitations, and notices. TI is not responsible or liable for such altered documentation. Information of third parties may be subject to additional restrictions.

Resale of TI components or services with statements different from or beyond the parameters stated by TI for that component or service voids all express and any implied warranties for the associated TI component or service and is an unfair and deceptive business practice. TI is not responsible or liable for any such statements.

Buyer acknowledges and agrees that it is solely responsible for compliance with all legal, regulatory and safety-related requirements concerning its products, and any use of TI components in its applications, notwithstanding any applications-related information or support that may be provided by TI. Buyer represents and agrees that it has all the necessary expertise to create and implement safeguards which anticipate dangerous consequences of failures, monitor failures and their consequences, lessen the likelihood of failures that might cause harm and take appropriate remedial actions. Buyer will fully indemnify TI and its representatives against any damages arising out of the use of any TI components in safety-critical applications.

In some cases, TI components may be promoted specifically to facilitate safety-related applications. With such components, TI’s goal is to help enable customers to design and create their own end-product solutions that meet applicable functional safety standards and requirements. Nonetheless, such components are subject to these terms.

No TI components are authorized for use in FDA Class III (or similar life-critical medical equipment) unless authorized officers of the parties have executed a special agreement specifically governing such use.

Only those TI components which TI has specifically designated as military grade or “enhanced plastic” are designed and intended for use in military/aerospace applications or environments. Buyer acknowledges and agrees that any military or aerospace use of TI components which have ***not*** been so designated is solely at the Buyer's risk, and that Buyer is solely responsible for compliance with all legal and regulatory requirements in connection with such use.

TI has specifically designated certain components as meeting ISO/TS16949 requirements, mainly for automotive use. In any case of use of non-designated products, TI will not be responsible for any failure to meet ISO/TS16949.

Products		**Applications**	
Audio	www.ti.com/audio	Automotive and Transportation	www.ti.com/automotive
Amplifiers	amplifier.ti.com	Communications and Telecom	www.ti.com/communications
Data Converters	dataconverter.ti.com	Computers and Peripherals	www.ti.com/computers
DLP® Products	www.dlp.com	Consumer Electronics	www.ti.com/consumer-apps
DSP	dsp.ti.com	Energy and Lighting	www.ti.com/energy
Clocks and Timers	www.ti.com/clocks	Industrial	www.ti.com/industrial
Interface	interface.ti.com	Medical	www.ti.com/medical
Logic	logic.ti.com	Security	www.ti.com/security
Power Mgmt	power.ti.com	Space, Avionics and Defense	www.ti.com/space-avionics-defense
Microcontrollers	microcontroller.ti.com	Video and Imaging	www.ti.com/video
RFID	www.ti-rfid.com		
OMAP Applications Processors	www.ti.com/omap	**TI E2E Community**	e2e.ti.com
Wireless Connectivity	www.ti.com/wirelessconnectivity		

Mailing Address: Texas Instruments, Post Office Box 655303, Dallas, Texas 75265
Copyright © 2016, Texas Instruments Incorporated

원문: ina196.pdf (media.ncd.io) · 제조사 원문 자료입니다. 사양은 제조사 사정에 따라 변경될 수 있습니다.