crydom DataSheet PCB Mount

# PF Series

- SIP SSR
- Ratings to 25A (forced air) @ 480 VAC
- SCR output for heavy industrial loads
- AC or DC control
- Zero-crossing (resistive loads) or random-fire (inductive loads) output

## PRODUCT SELECTION

| Control Voltage | 25A | 25A | 25A |
|---|---|---|---|
| 3-15 VDC | PF240D25 | | |
| 4-15 VDC | | PF380D25 | PF480D25 |
| 15-32 VDC | PFE240D25 | PFE380D25 | PFE480D25 |
| 18-36 VAC | PFE240A25 | | |
| 90-140 VAC | PF240A25 | | |

## AVAILABLE OPTIONS

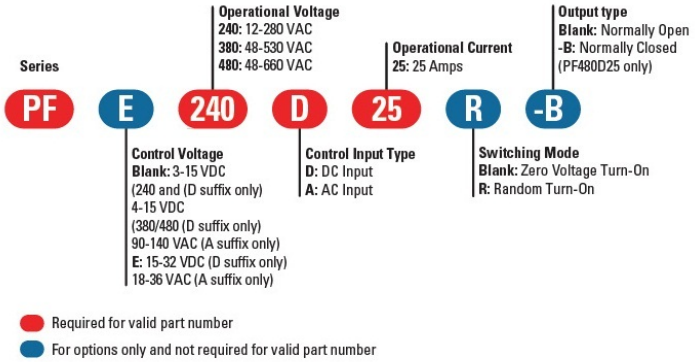


## OUTPUT SPECIFICATIONS (1)

| Description | PF240 | PF380 | PF480 |
|---|---|---|---|
| Operating Voltage (47-63Hz) [Vrms] | 12-280 | 48-530 | 48-660 |
| Transient Overvoltage [Vpk] | 600 | 1200 | 1200 |
| Maximum Off-State Leakage Current @ Rated Voltage [mArms] | 0.1 | 0.1 | 0.1 |
| Minimum Off-State dv/dt @ Maximum Rated Voltage [V/µsec] (2) | 500 | 500 | 500 |
| Maximum Load Current (Convection Air) [Arms] (3) | 10 | 10 | 10 |
| Maximum Load Current (Forced Air) [Arms] (3) | 25 | 25 | 25 |
| Minimum Load Current [Arms] | 0.06 | 0.06 | 0.06 |
| Maximum Surge Current (16.6ms) [Apk] | 250 | 250 | 250 |
| Maximum On-State Voltage Drop @ Rated Current [Vpk] | 1.6 | 1.6 | 1.6 |
| Maximum $I^2t$ for fusing (8.3 msec) [$A^2$ sec] | 260 | 260 | 260 |
| Minimum Power Factor (with Maximum Load) | 0.5 | 0.5 | 0.5 |

Do not forget to visit us at: www.crydom.com

Copyright © 2012 Crydom Inc. Specifications subject to change without notice.

A brand of CST CUSTOM SENSORS & TECHNOLOGIES

원문: PF 데이터 시트 .pdf (media.ncd.io) · 제조사 원문 자료입니다. 사양은 제조사 사정에 따라 변경될 수 있습니다.

crydom DataSheet PCB Mount

## INPUT SPECIFICATIONS (1)

| Description | PF240D25 | PF380D/480D | PFExxxD25 | PF240A25 | PFE240A25 |
|---|---|---|---|---|---|
| Control Voltage Range | 3-15 VDC | 4-15 VDC | 15-32 VDC | 90-140 VAC | 18-36 VAC |
| Maximum Turn On Voltage | 3.0 VDC | 4.0 VDC | 15.0 VDC | 90.0 Vrms | 18.0 Vrms |
| Minimum Turn-Off Voltage | 1.0 VDC | 1.0 VDC | 1.0 VDC | 10.0 Vrms | 2.0 Vrms |
| Typical Input Current @ Nominal Voltage | 15 mAdc | 15 mAdc | 15 mAdc | 10 mAdc | 10 mAdc |
| Nominal Input Impedance | 300 Ohm | 240 Ohm | 1500 Ohm | 14.1 k Ohm | 2.1 k Ohm |
| Maximum Turn-On Time [msec] (4) | 1/2 Cycle | 1/2 Cycle | 1/2 Cycle | 10 | 10 |
| Maximum Turn-Off Time [msec] | 1/2 Cycle | 1/2 Cycle | 1/2 Cycle | 40 | 40 |

## GENERAL SPECIFICATIONS

| Description | Parameters |
|---|---|
| Dielectric Strength, Input/Output/Base (50/60Hz) | 4000 Vrms |
| Minimum Insulation Resistance (@ 500 VDC) | $10^{9}$ Ohm |
| Maximum Capacitance, Input/Output | 8 pF |
| Ambient Operating Temperature Range | -30 to 80˚C |
| Ambient Storage Temperature Range | -30 to 125˚C |
| Weight (typical) | 1.02 oz. (29g) |
| Encapsulation | Thermally Conductive Epoxy |

**GENERAL NOTES**

1) All parameters at 25°C unless otherwise specified.
2) Off-State dv/dt test method per EIA/NARM standard RS-443,13.11.1
3) Heatsink temperature 85°C Maximum for 25A forced air cooling.
4) Turn-On Time for Random Turn-On versions 0.1 msec (DC Control Models)

## WIRING DIAGRAM

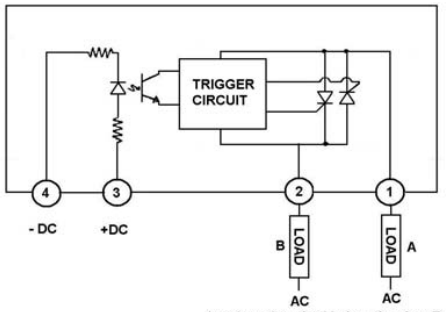

Load can be wired in location A or B

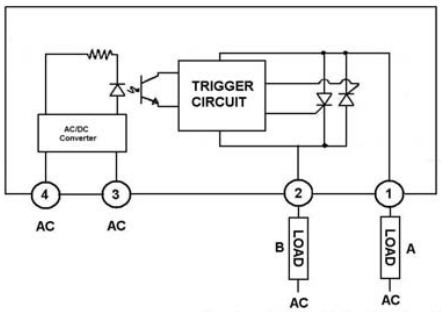

Load can be wired in location A or B

Do not forget to visit us at: www.crydom.com
Copyright © 2012 Crydom Inc. Specifications subject to change without notice.
A brand of CST

원문: PF 데이터 시트 .pdf (media.ncd.io) · 제조사 원문 자료입니다. 사양은 제조사 사정에 따라 변경될 수 있습니다.

crydom DataSheet PCB Mount

## MECHANICAL SPECIFICATIONS

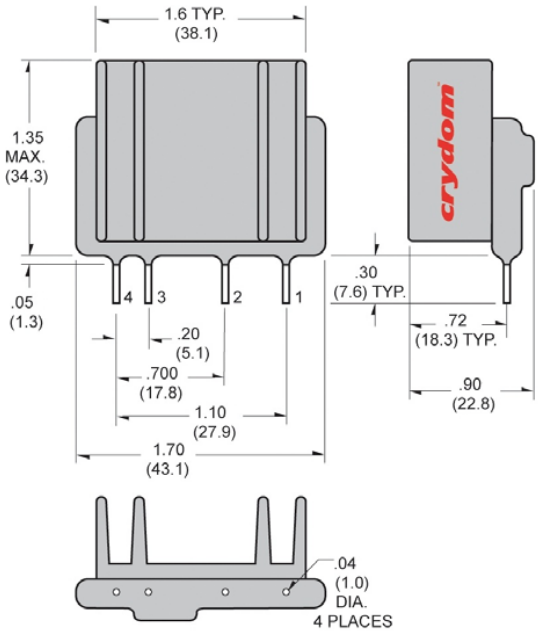


All dimensions are in inches (millimeters)

## THERMAL DERATE INFORMATION

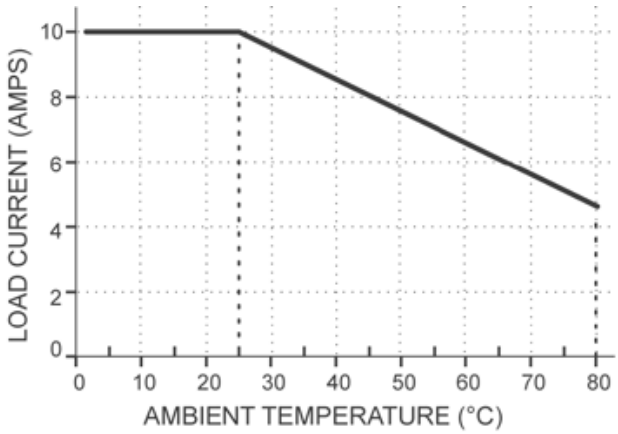


Fig.1 Convection Cooling

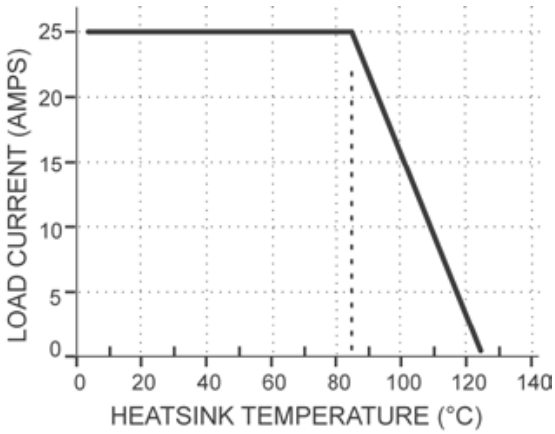


Fig.2 Forced Air Cooling

## AGENCY APPROVALS

E116950 70938 (240 V, 380V, DC Control Only)

Rev. 071614

Do not forget to visit us at: www.crydom.com

Copyright © 2012 Crydom Inc. Specifications subject to change without notice.

A brand of CST

원문: PF 데이터 시트 .pdf (media.ncd.io) · 제조사 원문 자료입니다. 사양은 제조사 사정에 따라 변경될 수 있습니다.

crydom DataSheet **PCB Mount**

## ⚠ DANGER / PELIGRO / DANGER /GEFAHR / PERICOLO / PERIGO

| | | | | | |
|---|---|---|---|---|---|
| **HAZARD OF ELECTRIC SHOCK, EXPLOSION, OR ARC FLASH.**<br>• Disconnect all power before installing or working with this equipment.<br>• Verify all connections and replace all covers before turning on power.<br>**Failure to follow these instructions will result in death or serious injury.** | **RIESGO DE DESCARGA ELECTRICA O EXPLOSION.**<br>• Desconectar todos los suministros de energia a este equipo antes de trabajar con este equipo.<br>• Verificar todas las conexiones y colocar todas las tapas antes de energizer el equipo.<br>**El incumplimiento de estas instrucciones puede provocar la muerte o lesiones serias.** | **RISQUE DE DESCHARGE ELECTRIQUE OU EXPLOSION**<br>• Eteindre toutes les sources d'énergie de cet appareil avant de travailler dessus de cet appareil<br>• Vérifier tous connections, et remettre tous couverts en olace avant de mettre sous<br>**De non-suivi de ces instructions provoquera la mort ou des lésions sérieuses sérieuses.** | **GEFAHR EINES ELEKTRISCHE N SCHLAGES ODER EINER EXPLOSION.**<br>• Stellen Sie jeglichen Strom ab, der dieses Gerät versorgt, bevor Sie an dem Gerät Arbeiten durchführen<br>• Vor der Inbetriebnahme alle Anschlüsse überprüfen und alle Gehäuseteile montieren.<br>**Unterlassung dieser Anweisungen können zum Tode oder zu schweren Verletzungen führen.** | **RISCHIO DI SCOSSA ELETTRICA O DELL'ESPLOSI ONE.**<br>• Spenga tutta l'alimentazion e che fornisce questa apparecchiatu ra prima del lavorare a questa apparecchiatu ra<br>• Verificare tutti i collegamenti e sostituire tutte le coperture prima della rotazione sull'alimentazi one<br>**L'omissione di seguire queste istruz ioni provocherà la morte o di lesioni serie** | **RISCO DE DESCARGA ELÉTTRICA OU EXPLOSÃO**<br>• Desconectar o equipamento de toda á energia antes de instalar ou trabalhar com este equipamen to<br>• Verificar todas as conexões e recolocar todas as tampas antes de religar o equipamento<br>**O não cumprimento destas instruções pode levar á morte ou lesões sérias.** |

## ⚠ WARNING / AVERTISSEMENT / WARNUNG /ADVERTENCIA / AVVERTENZA / AVISO

| | | |
|---|---|---|
| **RISK OF MATERIAL DAMAGE AND HOT ENCLOSURE**<br>• The product's side panels may be hot, allow the product to cool before touching.<br>• Follow proper mounting instructions including torque values.<br>• Do not allow liquids or foreign objects to enter this product.<br>**Failure to follow these instructions can result in serious injury, or equipment damage.** | **RISQUE DE DOMMAGE MATERIEL ET DE SURCHAUFFE DU BOITIER**<br>• Les panneaux latéraux du produit peuvent être chauds. Laisser le produit refroidir avant de le toucher.<br>• Respecter les consignes de montage, et notamment les couples de serrage.<br>• Ne pas laisser pénétrer de liquide ni de corps étrangers à l'intérieur du produit.<br>**Le non-respect de cette directive peut entraîner, des lésions corporelles graves ou des dommages matériels.** | **GEFAHR VON MATERIALSCHÄDEN UND GEHÄUSEERHITZUNG**<br>• Die Seitenwände können heiß sein. Lassen Sie das Produkt abkühlen, bevor Sie es berühren.<br>• Beachten Sie die Montageanweisungen,<br>• Führen Sie keine Flüssigkeiten oder Fremdkörper in das Produkt ein.<br>**Die Nichtbeachtung dieser Anweisung kann Körperverletzung oder Materialschäden zur Folge haben.** |
| **RIESGO DE DAÑOS MATERIALES Y DE SOBRECALENTAMIENTO DE LA UNIDAD**<br>• Los paneles laterales del producto pueden estar calientes. Esperar que el producto se enfríe antes de tocarlo.<br>• Respetar las instrucciones de montaje, y en particular los pares de apretado.<br>• No dejar que penetren líquidos o cuerpos extraños en el producto.<br>**Si no se respetan estas precauciones pueden producirse graves lesiones, daños materiales.** | **RISCHIO DI DANNI MATERIALI E D'INVOLUCRO CALDO**<br>• I pannelli laterali dell'apparecchio possono scottare; lasciar quindi raffreddare il prodotto prima di toccarlo.<br>• Seguire le istruzioni di montaggio corrette.<br>• Non far entrare liquidi o oggetti estranei in questo apparecchio.<br>**La mancata osservanza di questa precauzione può causare gravi rischi per l'incolumità personale o danni alle apparecchiature.** | **RISCO DE DANO MATERIAL E DE AQUECIMENTO**<br>• Os painéis laterais do produto podem estar quentes; dê tempo ao produto para arrefecer antes de lhe tocar.<br>• Siga devidamente as instruções de montagem.<br>• Não permita a entrada de líquidos e de objectos estranhos no produto.<br>**A não observância destas precauções pode provocar a morte, ferimentos graves ou danos materiais.** |

Do not forget to visit us at: **www.crydom.com**

Copyright © 2012 Crydom Inc. Specifications subject to change without notice.

A brand of CST CUSTOM SENSORS & TECHNOLOGIES

원문: PF 데이터 시트 .pdf (media.ncd.io) · 제조사 원문 자료입니다. 사양은 제조사 사정에 따라 변경될 수 있습니다.

crydom DataSheet PCB Mount

## ANNEX - ENVIROMENTAL INFORMATION

**The environmental information disclosed in this annex including the EIP Pollution logo are in compliance with People's Republic of China Electronic Industry Standard SJ/T11364 – 2006, Marking for Control of Pollution Caused by Electronic Information Products.**

| Part Name | Toxic or hazardous Substance and Elements | | | | | |
|---|---|---|---|---|---|---|
| | Lead (Pb) | Mercury (Hg) | Cadmium (Cd) | Hexavalent Chromium (Cr (VI)) | Polybrominated biphenyls (PBB) | Polybrominated diphenyl ethers (PBDE) |
| Semiconductor die | X | O | O | O | O | O |
| Solder | X | O | O | O | O | O |

此附件所标示的包括电子信息产品污染图标的环保信息
符合中华人民共和国电子行业标准 **SJ/T11364 - 2006,**
电子信息产品污染控制标识要求

| 部件名称 | 有毒有害物质或元素 | | | | | |
|---|---|---|---|---|---|---|
| | 铅 (Pb) | 汞 (Hg) | 镉 (Cd) | 六价铬 (Cr (VI)) | 多溴联苯 (PBB) | 多溴二苯醚 (PBDE) |
| 半导体芯片 | X | O | O | O | O | O |
| 焊接点 | X | O | O | O | O | O |


Copyright © 2012 Crydom Inc. Specifications subject to change without notice.

원문: PF 데이터 시트 .pdf (media.ncd.io) · 제조사 원문 자료입니다. 사양은 제조사 사정에 따라 변경될 수 있습니다.