Honeywell

Honeywell HumidIcon™ Digital Humidity/Temperature Sensors

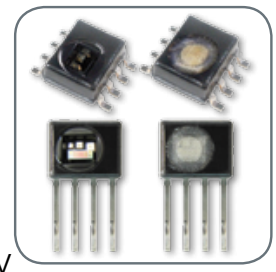

HIH7000 Series

±3.0 %RH Accuracy | ±0.5 °C Temperature Accuracy

Datasheet

원문: HIH7130.pdf (media.ncd.io) · 제조사 원문 자료입니다. 사양은 제조사 사정에 따라 변경될 수 있습니다.

Honeywell HumidIcon™ Digital Humidity/Temperature Sensors

Honeywell HumidIcon™ Digital Humidity/Temperature Sensors, HIH7000 Series, are digital output-type relative humidity (RH) and temperature sensors combined in the same package. These sensors provide an accuracy level of **±3.0 %RH** and a temperature accuracy level of **±0.5 °C**.

- Industry-leading long-term stability
- Industry-leading reliability
- Lowest total cost solution
- True temperature-compensated digital I²C or SPI output
- Energy efficiency
- Ultra-small package size and options
- Other accuracies available: ±1.7 %RH (HIH9000 Series), ±2.0 %RH (HIH8000 Series), ±4.0 %RH (HIH6100 Series), and ±4.5 %RH (HIH6000 Series)

What makes our sensors better?

- One sensor does the work of two!
- ±3.0 %RH accuracy (humidity performance)
- ±0.5 °C accuracy (temperature performance)
- -40 °C to 100 °C [-40 °F to 212 °F] operating temperature range

The series consists of packaging variations, offering customers the ability to choose housing style (SIP 4-Pin or SOIC-8 SMD), filter (hydrophobic filter or no filter), output (I²C or SPI), and packaging (tape and boxed, tape and reel, or samples on tape).

HIH7000 Series Housing, Filter, Output, and Packaging Comparison

Series*	Output type	Supply voltage	Housing style	Filter	Accuracy	Output	Packaging
HIH7120-021-xxxx	digital	2.3 Vdc to 5.5 Vdc	SIP 4-pin	without filter, non-condensing	±3.0 %RH	I²C	100 to 249 units on tape and boxed, 250 units or more on tape and reel; or 5 sample pieces on tape
HIH7121-021-xxxx			SIP 4-pin	with filter, condensation resistant		I²C	
HIH7130-021-xxxx			SOIC-8 SMD	without filter, non-condensing		I²C	1000 pieces on tape and reel; or 5 sample pieces on tape
HIH7130-000-xxxx			SOIC-8 SMD	without filter, non-condensing		SPI	
HIH7131-021-xxxx			SOIC-8 SMD	with filter, condensation resistant		I²C	1000 pieces on tape and reel; or 5 sample pieces on tape
HIH7131-000-xxxx			SOIC-8 SMD	with filter, condensation resistant		SPI	

* See order guide on page 11 for complete catalog listings.

INDUSTRY-LEADING RELIABILITY • ACCURACY • PACKAGING • LONG-TERM STABILITY

원문: HIH7130.pdf (media.ncd.io) · 제조사 원문 자료입니다. 사양은 제조사 사정에 따라 변경될 수 있습니다.

Features and Benefits

INDUSTRY-LEADING LONG-TERM STABILITY* (1.2 %RH OVER FIVE YEARS)

Competitive humidity sensors require a 12 hour at 75 %RH rehydration process (which requires special equipment chambers) to correct reflow temperature offset. Honeywell's sensor also experiences an offset after reflow; however, it only requires a five-hour rehydration under ambient conditions (>50 %RH). Honeywell's industry-leading long-term stability:

- Minimizes system performance issues.
- Helps **support system uptime** by eliminating the need to service or replace the sensor during its application life.
- **Eliminates the need to regularly recalibrate** the sensor in the application, which can be inconvenient and costly.

INDUSTRY-LEADING RELIABILITY (MTTF 9,312,507 HR)*

Thermoset-polymer capacitive sensing element's multilayer construction provides **resistance to most application hazards** such as condensation, dust, dirt, oils, and common environmental chemicals, which help provide industry-leading reliability.

Offers customers the lowest total cost solution.

LOWEST TOTAL COST SOLUTION*

Honeywell's HumidIcon HIH7000 Series delivers the lowest total cost solution due to the sensor's **industry-leading combined humidity/temperature sensor.**

One sensor does the work of two!

COMBINED HUMIDITY AND TEMPERATURE SENSOR

Allows the RH measurement to be temperature compensated, and provides a second, standalone temperature sensor output; allows the user to **purchase one sensor instead of two.**

ENERGY EFFICIENT*

- *Low supply voltage:* Can operate down to 2.3 Vdc, which allows use in **low energy and wireless-compatible applications** to enhance energy savings and prolong system battery life.
- *Low power consumption:* The sensor goes into **sleep mode** when not taking a measurement within the application, consuming only 1 µA of power versus 650 µA in full operation in a battery operated system; sleep mode helps maximize battery life, reduces power supply size, and reduces the application's overall weight.

*Competitive Differentiator

원문: HIH7130.pdf (media.ncd.io) · 제조사 원문 자료입니다. 사양은 제조사 사정에 따라 변경될 수 있습니다.

Features and Benefits

HIGH RESOLUTION

High 14-bit humidity sensor resolution and 14-bit temperature sensor resolution within the application help the user's system **detect the smallest relative humidity or temperature change.**

Free up PCB space. Reduce costs.

TRUE, TEMPERATURE-COMPENSATED DIGITAL I²C OR SPI OUTPUT*

Typically allows the customer to remove the components associated with signal conditioning from the PCB to **free up space** and **reduce costs** associated with those components (e.g., acquisition, inventory, assembly). True, temperature-compensated digital I²C or SPI output often eliminates problems that could occur from having multiple signal conditioning components across the PCB, as well as simplifies integration to the microprocessor, eliminating the need for customer-implemented, complex signal conditioning.

Choose options to best fit the application.

HOUSING STYLE

SOIC-8 SMD (Surface Mount Device) or SIP 4 Pin; ultra-small size allows for flexibility of use within the application, **occupies less space** on the PCB, and typically **simplifies placement** on crowded PCBs or in small devices; industry standard design simplifies design-in.

FILTER

Available with hydrophobic filter and condensation-resistance, allowing for **use in many condensing environments**, or without hydrophobic filter, non-condensing.

TAPE AND REEL

Allows for use in high volume, automated pick-and-place manufacturing, **eliminating lead misalignment** to the PCB and helping the customer to **reduce manufacturing costs.**

WIDE OPERATING TEMPERATURE RANGE

-40 °C to 100 °C [-40 °F to 212 °F] allows for use in many applications.

OPTIONAL ONE OR TWO %RH LEVEL ALARM OUTPUTS

Provides the ability to monitor whether the RH level has exceeded or fallen below predetermined and critical levels within the application.

MULTI-FUNCTION ASIC

Delivers flexibility within the application by lowering or eliminating the risk and cost of OEM calibration.

ROHS AND WEEE COMPLIANT, HALOGEN FREE

*Competitive Differentiator

원문: HIH7130.pdf (media.ncd.io) · 제조사 원문 자료입니다. 사양은 제조사 사정에 따라 변경될 수 있습니다.

Potential Applications

INDUSTRIAL

HVAC/R

May be used to provide precise RH and temperature measurement in air conditioning/air movement systems, enthalpy sensing, thermostats, humidifiers/dehumidifiers, and humidistats to maintain occupant comfort and ideal storage humidity/temperature while achieving low energy consumption, supporting system accuracy and warranty requirements, maximizing system uptime, and improving overall system quality.

AIR COMPRESSORS

May be used to provide precise RH measurement in compressed air lines, allowing the system to remove any condensation; dry compressed air is critical for customer process control measurement.

WEATHER STATIONS

May be used to provide precise RH and temperature measurement in ground-based and airborne weather stations, allowing real time and highly accurate monitoring/reporting of actual weather conditions.

TELECOM CABINETS

May be used to provide precise RH and temperature measurement in the telecom cabinet HVAC system; maintaining proper temperature and humidity levels in the cabinet provides maximum system uptime and performance.

INDUSTRIAL INCUBATORS/MICROENVIRONMENTS

May be used to provide optimal temperature and RH levels to support critical processes and experiments, enhancing process efficiency with desired climate conditions.

GRAIN DRYING SYSTEMS

May be used in cable-mounted grain drying management systems to measure the moisture content and temperature level inside the grain silos to help the grains remain dry.

MEDICAL

RESPIRATORY THERAPY

May be used to provide precise RH and temperature measurement in sleep apnea machines and ventilators, enhancing patient comfort, safety and treatment effectiveness with warm and humidified air.

INCUBATORS/MICROENVIRONMENTS

May be used to provide optimal temperature and RH levels to support critical processes and experiments, enhancing process efficiency with desired climate conditions.

원문: HIH7130.pdf (media.ncd.io) · 제조사 원문 자료입니다. 사양은 제조사 사정에 따라 변경될 수 있습니다.

HIH7000 Series ±3.0 %RH Accuracy | ±0.5 °C Temperature Accuracy

Table 1. Environmental Specifications

Characteristic	Condition	Min.	Typ.	Max.	Unit
Operating temperature range	powered	-40 [-40]	–	100 [212]	°C [°F]
Operating humidity range	powered	0	–	100	%RH
Storage temperature range	unpowered	-40 [-40]	–	125 [257]	°C [°F]
Storage humidity range	–	30	–	50	%RH
Soldering temperature: manual automated	 4 s reflow peak 30 s reflow peak	 – –	 – –	 350 [662] 260 [500]	°C [°F]
ESD	MIL-STD 883H, Method 3015.7	–	–	±4	kV
Latch-up immunity	–	–	–	±100	mA
Shock	MIL-STD 202G, Method 213D, Test Condition C, half-sine, 6 ms ±3 perpendicular axis, 3 shock pulses per axis	–	–	100	g
Vibration	MIL-STD 202G, Method 204D, Test Condition D, 10 Hz to 2000 Hz	–	–	20	g
Light sensitivity	exposed to 50 lumens yellow light; exhibited no change in output				
Reliability (MTTF)	9,312,507 hr				

Table 2. Humidity Performance Specifications

Characteristic	Condition	Min.	Typ.	Max.	Unit
Supply voltage range	V_{DD}	2.3	3.3	5.5	Vdc
Compensated humidity range[1]	5 °C to 50 °C [41 °F to 122 °F]	20	–	80	%RH
Compensated temp. range[1]	–	5 [41]	–	50 [122]	°C [°F]
Resolution	14 bit ADC resolution	–	–	0.04	%RH
Accuracy[2]	25 °C [77 °F] rising RH	–	±3.0	–	%RH
Response time	airflow minimum 20 l/min	–	6	8	s
Operating range	non-condensing	0	–	100	%RH
Long term stability	50 %RH for 5 years	–	±0.05	±1.2	%RH
Impact of soldering	IPC/EIA/JEDEC J-STD-020D, peak temp. of 260 °C [500 °F]	–	–	±2.5	%RH

Notes:

[1] Conversion Formulas:

14 bit ADC output for humidity to %RH:

$$\text{Humidity (\%RH)} = \frac{\text{Humidity_14_bit_ADC_output}}{2^{14} - 2} \times 100$$

14 bit ADC output for temperature conversion to °C:

$$\text{Temperature (C°)} = \frac{\text{Temperature_14_bit_ADC_output}}{2^{14} - 2} \times 165 - 40$$

[2] Accuracy is specified at the typical supply voltage of 3.3 Vdc and at 25 °C [77 °F]. It is the maximum deviation from the ideal transfer function of relative humidity measured over the compensated humidity range of 20 %RH to 80 %RH.

원문: HIH7130.pdf (media.ncd.io) · 제조사 원문 자료입니다. 사양은 제조사 사정에 따라 변경될 수 있습니다.

Honeywell HumidIcon™ Digital Humidity/Temperature Sensors

Table 3. Temperature Performance Specifications

Characteristic	Condition	Min.	Typ.	Max.	Unit
Supply voltage variation	2.3 Vdc to 5.5 Vdc	–	0.5	1.0	°C
Compensated temp. range	–	5 [41]	–	50 [122]	°C [°F]
Resolution	14 bit ADC resolution	–	–	0.025	°C
Accuracy	5 °C to 50 °C [41 °F to 122 °F]	–	±0.5	–	°C
Response time	1/e slow moving air	5	–	30	s
Long term stability	25 °C for 5 years	–	–	±0.05	°C/yr
Impact of soldering	IPC/EIA/JEDEC J-STD-020D, peak temp. of 260 °C [500 °F]	–	–	±0.1	°C

Table 4. Current Consumption

Characteristic	V_{DD}	Abbr.	Condition	Typ.	Max.	Unit
Sleep current	3.3	I_{SLEEP}	–	0.6	1	µA
Supply current:						
I²C	3.3	I_{DD}	14 bit fastest update, no sleep	0.65	1	mA
SPI	3.3	I_{DD}	14 bit fastest update, no sleep	0.75	1	mA

Table 5. Input and Output Characteristics

Characteristic	Abbr.	Condition	Min.	Typ.	Max.	Unit
Supply voltage	V_{DD}	–	2.3	3.3	5.5	Vdc
Low level output voltage	V_{OL}	I_{OL} = 2.8 mA min.	–	–	20 %	V_{DD}
High level output voltage	V_{OH}	I_{OH} = -2.8 mA min.	80 %	–	–	V_{DD}
Low level input voltage	V_{IL}	–	–	–	20 %	V_{DD}
High level input voltage	V_{IH}	–	80 %	–	–	V_{DD}
Pull-up resistor:						
I²C	R_P	–	–	2.2	–	kOhm
SPI (for SS only)	R_{SS}	–	–	10	–	kOhm

Table 6. Measurement Timing

Characteristic	Abbr.	Condition	Min.	Typ.	Max.	Unit
Start-up time (power-on to data ready)	T_{STA}	14 bit TH and 14 bit humidity resolution	–	50	60	ms
Update rate	application dependent: measurements are taken only when the application requests them					

원문: HIH7130.pdf (media.ncd.io) · 제조사 원문 자료입니다. 사양은 제조사 사정에 따라 변경될 수 있습니다.

we measure, we calibrate, we validate.
KOLAS 국제공인교정기관 · ISO/IEC 17025

HIH7000 Series ±3.0 %RH Accuracy | ±0.5 °C Temperature Accuracy

Figure 1. I²C Timing Diagram

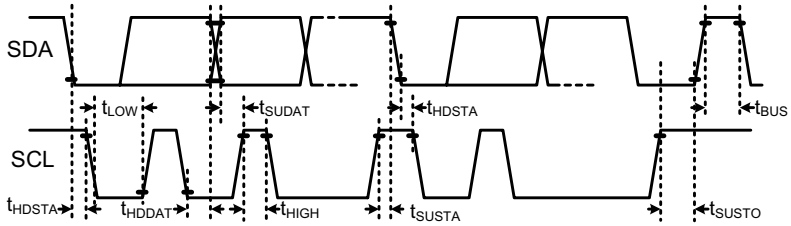

Characteristic	Abbr.	Min.	Typ.	Max.	Unit
SCL clock frequency	F_{SCL}	100	–	400	kHz
Start condition hold time relative to SCL edge	t_{HDSTA}	0.1	–	–	µs
Minimum SCL clock low width[1]	t_{LOW}	0.6	–	–	µs
Minimum SCL clock high width[1]	t_{HIGH}	0.6	–	–	µs
Start condition setup time relative to SCL edge	t_{SUSTA}	0.1	–	–	µs
Data hold time on SDA relative to SCL edge	t_{HDDAT}	0	–	0.5	µs
Data setup time on SDA relative to SCL edge	t_{SUDAT}	0.1	–	–	µs
Stop condition setup time on SCL	t_{SUSTO}	0.1	–	–	µs
Bus free time between stop and start condition	t_{BUS}	1	–	–	µs

Note:
[1] Combined low and high widths must equal or exceed minimum SCL period.

Figure 2. SPI Timing Diagram

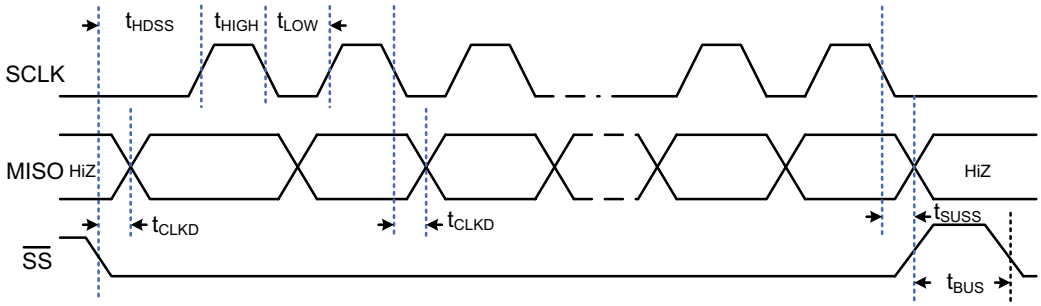

Characteristic	Abbr.	Min.	Typ.	Max.	Unit
SCLK clock frequency	f_{SCL}	50	–	800	kHz
SS drop to first clock edge	t_{HDSS}	2.5	–	–	µs
Minimum SCLK clock low width[1]	t_{LOW}	0.6	–	–	µs
Minimum SCLK clock high width[1]	t_{HIGH}	0.6	–	–	µs
Clock edge to data transition	t_{CLKD}	0	–	0.5	µs
Rise of SS relative to last clock edge	t_{SUSS}	0.1	–	–	µs
Bus free time between rise and fall of SS	t_{BUS}	2	–	–	µs

Note:
[1] Combined low and high widths must equal or exceed minimum SCLK period.

원문: HIH7130.pdf (media.ncd.io) · 제조사 원문 자료입니다. 사양은 제조사 사정에 따라 변경될 수 있습니다.

Honeywell HumidIcon™ Digital Humidity/Temperature Sensors

Figure 3. SOIC-8 SMD Typical Application Circuits

I²C

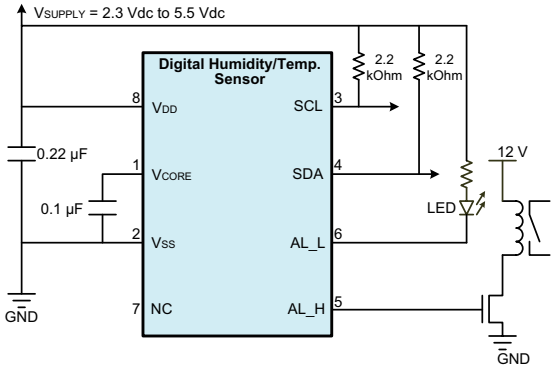

SPI

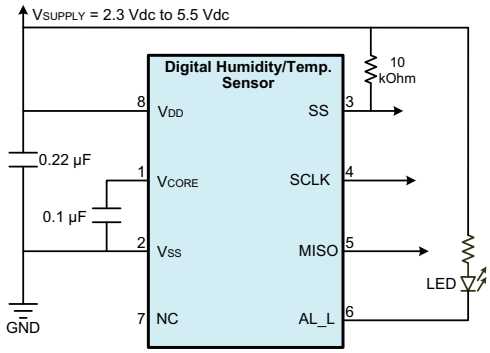

Figure 4. SOIC-8 SMD Mounting Dimensions, PCB Landing Pattern and Pinout [For reference only: mm/[in].)

Mounting

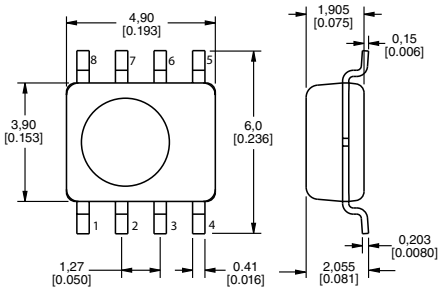

Landing Pattern

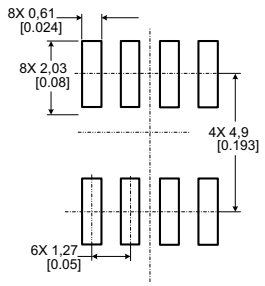

Pinout for I²C Versions

Pin	ASIC Pad	Description
1	V_{CORE}	connect via 0.1 µF to ground
2	V_{SS}	supply ground
3	SCL	I²C clock
4	SDA	I²C data
5[1]	AL_H	alarm output high
6[1]	AL_L	alarm output low
7	NC	not connected externally
8	V_{DD}	supply voltage, connect via 0.22 µF to ground

[1] Do not connect Pin(s) 5 and/or 6 if the built-in alarm feature is not desired.

Pinout for SPI Versions

Pin	ASIC Pad	Description
1	V_{CORE}	connect via 0.1 µF to ground
2	V_{SS}	supply ground
3	SS	slave select (Input)
4	SCLK	serial clock
5	MISO	master-in-slave-out
6[1]	AL_L	alarm output low
7	NC	not connected externally
8	V_{DD}	supply voltage, connect via 0.22 µF to ground

[1] Do not connect Pin 6 if the built-in alarm feature is not desired.

Tape and Reel

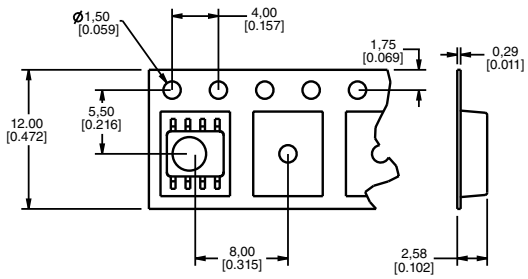

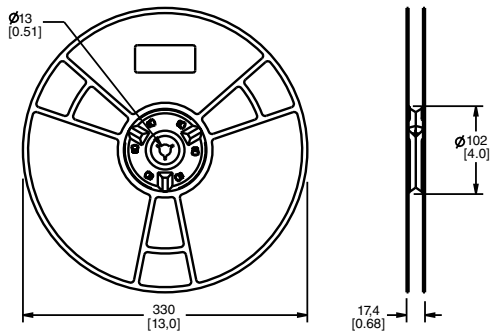

원문: HIH7130.pdf (media.ncd.io) · 제조사 원문 자료입니다. 사양은 제조사 사정에 따라 변경될 수 있습니다.

HIH7000 Series ±3.0 %RH Accuracy | ±0.5 °C Temperature Accuracy

Figure 5. SIP 4 Pin Typical Application Circuit

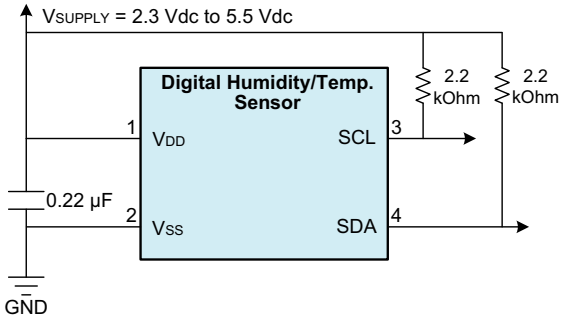

Figure 6. SIP 4 Pin Mounting Dimensions, PCB Landing Pattern and Pinout [For reference only: mm/[in].)

Mounting

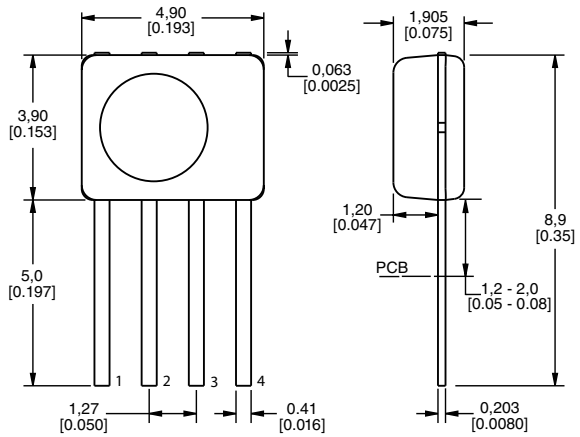

Landing Pattern

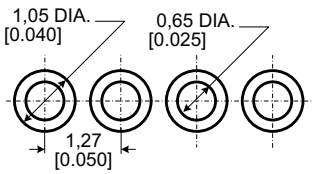

Pin	ASIC Pad	Description
1	V_{DD}	connect via 0.22 µF to ground
2	V_{SS}	supply ground
3	SCL	I²C clock
4	SDA	I²C data

Tape and Reel[1]

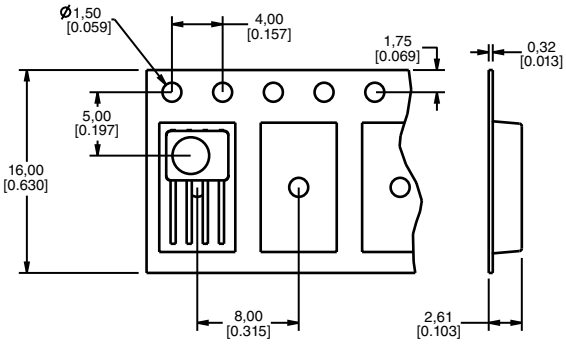

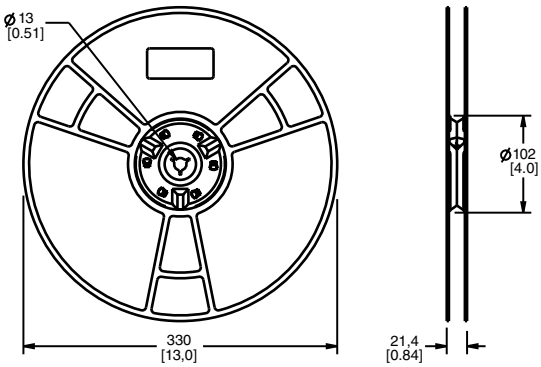

[1] For orders of 250 to 1000 units

원문: HIH7130.pdf (media.ncd.io) · 제조사 원문 자료입니다. 사양은 제조사 사정에 따라 변경될 수 있습니다.

Honeywell HumidIcon™ Digital Humidity/Temperature Sensors

Order Guide

Catalog Listing	Description
HIH7120-021-001[1]	Honeywell HumidIcon™ Digital Humidity/Temperature Sensors: HIH7000 Series, I²C, ±3.0 %RH accuracy, SIP 4 Pin, without filter, non-condensing, 100 units on tape
HIH7120-021-001S	Honeywell HumidIcon™ Digital Humidity/Temperature Sensors: HIH7000 Series, I²C, ±3.0 %RH accuracy, SIP 4 Pin, without filter, non-condensing, five units on tape (sample)
HIH7121-021-001[1]	Honeywell HumidIcon™ Digital Humidity/Temperature Sensors: HIH7000 Series, I²C, ±3.0 %RH accuracy, SIP 4 Pin, with filter, condensation-resistant, 100 units on tape
HIH7121-021-001S	Honeywell HumidIcon™ Digital Humidity/Temperature Sensors: HIH7000 Series, I²C, ±3.0 %RH accuracy, SIP 4 Pin, with filter, condensation-resistant, five units on tape (sample)
HIH7130-000-001	Honeywell HumidIcon™ Digital Humidity/Temperature Sensors: HIH7000 Series, SPI, ±3.0 %RH accuracy, SOIC-8 SMD, without filter, non-condensing, 1000 units on tape and reel
HIH7130-000-001S	Honeywell HumidIcon™ Digital Humidity/Temperature Sensors: HIH7000 Series, SPI, ±3.0 %RH accuracy SOIC-8 SMD, without filter, non-condensing, five units on tape (sample)
HIH7130-021-001	Honeywell HumidIcon™ Digital Humidity/Temperature Sensors: HIH7000 Series, I²C, ±3.0 %RH accuracy, SOIC-8 SMD, without filter, non-condensing, 1000 units on tape and reel
HIH7130-021-001S	Honeywell HumidIcon™ Digital Humidity/Temperature Sensors: HIH7000 Series, I²C, ±3.0 %RH accuracy, SOIC-8 SMD, without filter, non-condensing, five units on tape (sample)
HIH7131-000-001	Honeywell HumidIcon™ Digital Humidity/Temperature Sensors: HIH7000 Series, SPI, ±3.0 %RH accuracy, SOIC-8 SMD, with filter, condensation-resistant, 1000 units on tape and reel
HIH7131-000-001S	Honeywell HumidIcon™ Digital Humidity/Temperature Sensors: HIH7000 Series, SPI, ±3.0 %RH accuracy, SOIC-8 SMD, with filter, condensation-resistant, five units on tape (sample)
HIH7131-021-001	Honeywell HumidIcon™ Digital Humidity/Temperature Sensors: HIH7000 Series, I²C, ±3.0 %RH accuracy, SOIC-8 SMD, with filter, condensation-resistant, 1000 units on tape and reel
HIH7131-021-001S	Honeywell HumidIcon™ Digital Humidity/Temperature Sensors: HIH7000 Series, I²C, ±3.0 %RH accuracy, SOIC-8 SMD, with filter, condensation-resistant, five units on tape (sample)

[1] Orders of 250 units or more are packaged on tape and reel.

원문: HIH7130.pdf (media.ncd.io) · 제조사 원문 자료입니다. 사양은 제조사 사정에 따라 변경될 수 있습니다.

HIH7000 Series ±3.0 %RH Accuracy | ±0.5 °C Temperature Accuracy

NOTICE: SENSOR REHYDRATION

- Exposure to elevated temperatures, such as those experienced during solder reflow, may dry out the sensing element. It is recommended that the sensor be allowed time to rehydrate after soldering or other high temperature/dry exposures.
- Exposure to these conditions will not permanently damage the sensor. It will generally return to its factory-calibrated value after rehydration.
- If rehydration is not performed, the sensor may read a slight offset that slowly disappears over time as the sensor becomes exposed to ambient conditions. Conversely, extended exposure to condensing and high humidity environments (>90 %RH) may cause a revisable shift in readings which will generally return to normal after the sensor has been allowed to dry off.

To rehydrate the sensor, expose it to room temperature under ambient conditions (>50 %RH) for a minimum of five hours.

⚠ WARNING

PERSONAL INJURY

DO NOT USE these products as safety or emergency stop devices or in any other application where failure of the product could result in personal injury.

Failure to comply with these instructions could result in death or serious injury.

⚠ WARNING

MISUSE OF DOCUMENTATION

- The information presented in this product sheet is for reference only. Do not use this document as a product installation guide.
- Complete installation, operation, and maintenance information is provided in the instructions supplied with each product.

Failure to comply with these instructions could result in death or serious injury.

원문: HIH7130.pdf (media.ncd.io) · 제조사 원문 자료입니다. 사양은 제조사 사정에 따라 변경될 수 있습니다.

ADDITIONAL INFORMATION

The following associated literature is available on the Web:

- Product installation instructions
- Product application note
- Application sheets:
  - Humidity Sensor Performance Characteristics
  - Humidity Sensor Theory and Behavior
  - Humidity Sensor Moisture and Psychrometrics
  - Humidity Sensor Chemical Resistivity
  - Thermoset Polymer-Based Capacitive Sensors
- Technical Notes:
  - I^2C Communication with the Honeywell HumidIcon™ Digital Humidity/Temperature Sensors
  - SPI Communication with the Honeywell HumidIcon™ Digital Humidity/Temperature Sensors
  - Using Alarms on the Honeywell HumidIcon™ Digital Humidity/Temperature Sensors
  - Entering and Using Command Mode on the Honeywell HumidIcon™ Digital Humidity/Temperature Sensors

WARRANTY/REMEDY

Honeywell warrants goods of its manufacture as being free of defective materials and faulty workmanship. Honeywell's standard product warranty applies unless agreed to otherwise by Honeywell in writing; please refer to your order acknowledgement or consult your local sales office for specific warranty details. If warranted goods are returned to Honeywell during the period of coverage, Honeywell will repair or replace, at its option, without charge those items it finds defective. **The foregoing is buyer's sole remedy and is in lieu of all other warranties, expressed or implied, including those of merchantability and fitness for a particular purpose. In no event shall Honeywell be liable for consequential, special, or indirect damages.**

While we provide application assistance personally, through our literature and the Honeywell website, it is up to the customer to determine the suitability of the product in the application.

Specifications may change without notice. The information we supply is believed to be accurate and reliable as of this printing. However, we assume no responsibility for its use.

Find out more

Honeywell serves its customers through a worldwide network of sales offices, representatives and distributors. For application assistance, current specifications, pricing or name of the nearest Authorized Distributor, contact your local sales office.

To learn more about Honeywell's sensing and control products, call **+1-815-235-6847 or 1-800-537-6945**, visit **sensing.honeywell.com,** or e-mail inquiries to **info.sc@honeywell.com**

Sensing and Control
Honeywell
1985 Douglas Drive North
Golden Valley, MN 55422
honeywell.com

Honeywell

009074-7-EN
May 2015
Copyright © 2015 Honeywell International Inc. All rights reserved.

원문: HIH7130.pdf (media.ncd.io) · 제조사 원문 자료입니다. 사양은 제조사 사정에 따라 변경될 수 있습니다.