HOPERF ELECTRONIC

DataSheet **HP203B**

PRECISION BAROMETER AND ALTIMETER SENSOR

Features

- Supply voltage: 1.8V to 3.6V
- Pressure range: 300mbar~1200mbar
- Programmable events and interrupt controls
- Fully data compensated
- Direct Reading, compensated:
  -Pressure: 20-bit measurement (Pascals)
  -Altitude: 20-bit measurement (Meters)
  -Temperature: 20-bit measurement (Degrees Celsius)
- Altitude Resolution down to 0.1 meter
- Standby current: <0.1μA
- Operation temperature: -40 to +85℃
- High-speed I²C digital output interface
- Size: 3.8 ×3.6 ×1.2 mm

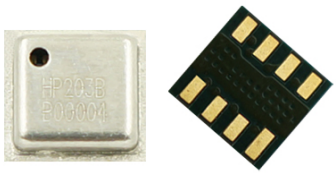

3.8 ×3.6 ×1.2 mm

Applications

- Mobile altimeter / barometer
- Smart phones / tablets
- Industrial pressure and temperature sensor system
- Adventure and sports watches
- Weather station equipment
- Indoor navigation and map assist
- Data loggers for pressure, temperature and altitude
- GPS enhancement for emergency services

Descriptions

The HP203B employs a MEMS pressure sensor with an I²C interface to provide accurate temperature, pressure or altitude data. The sensor pressure and temperature outputs are digitized by a high resolution 24-bit ADC. The altitude value is calculated by a specific patented algorithm according to the pressure and temperature data. Data compensation is integrated internally to save the effort of the external host MCU system. Easy command-based data acquisition interface and programmable interrupt control is available. Typical active supply current is 5.3μA per measurement-second while the ADC output is filtered and decimated by 256. Pressure output can be resolved with output in fractions of a Pascal, and altitude can be resolved in 0.1 meter. Package is surface mount with a stainless steel cap and is RoHS compliant.

원문: HP203B_DataSheet_EN_V2.0.pdf (media.ncd.io) · 제조사 원문 자료입니다. 사양은 제조사 사정에 따라 변경될 수 있습니다.

HOPERF ELECTRONIC

DataSheet **HP203B**

1. Block Diagram

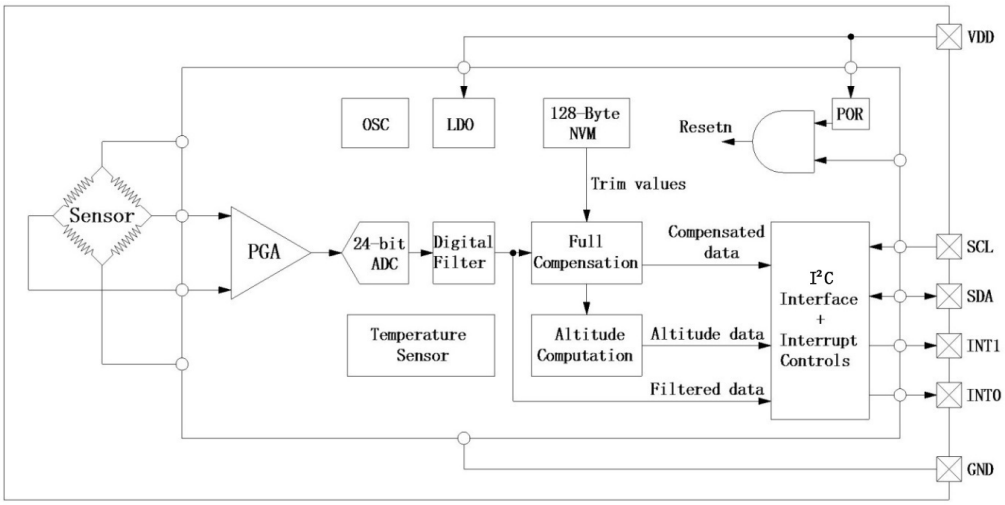

Figure 1: Functional block diagram

2. Mechanical and Electrical Specifications

2.1 Pressure and Temperature Characteristics

Table1: Pressure Output Characteristics @ VDD = 3.0V, T = 25℃ unless otherwise noted

Parameter	Symbol	Conditions	Min	Typ.	Max	Unit
Pressure Measurement Range	P_{FS}		300		1200	mbar
Pressure Absolute Accuracy		700 to 1100 mbar From 0℃ to 50℃	-1.5		+1.5	mbar
		700 to 1100 mbar From -20℃ to 70℃	-3		+3	mbar
Pressure Relative Accuracy		700 to 1100 mbar at 25℃		±0.5		mbar
		700 to 1100 mbar From 0℃ to 50℃		±1.5		
Max Error with Power Supply		Power supply from 1.8V to 3.6V	-2.5		+2.5	mbar
Pressure/Altitude Resolution		Pressure Mode		0.01		mbar
		Altimeter Mode		10		cm
Board Mount Drift		After solder reflow		±0.5		mbar
Long Term Drift		After a period of 1 year		±1.5		mbar
Reflow soldering impact		IPC/JEDEC J-STD-020C		+0.5		mbar

원문: HP203B_DataSheet_EN_V2.0.pdf (media.ncd.io) · 제조사 원문 자료입니다. 사양은 제조사 사정에 따라 변경될 수 있습니다.

Table2: Temperature Output Characteristics @ VDD = 3.0V, T = 25°C unless otherwise note

Parameter	Symbol	Conditions	Min	Typ	Max	Unit
Operation Temperature Range	T_{OP}		-40		85	℃
Temperature Absolute Accuracy		25℃		±0.3	±0.5	℃
		-10℃ to +70℃		±0.6	±1.0	℃
		-40℃ to + 85℃		±1.0	±3.0	℃
Max Error with Power		Power supply from 1.8V to 3.6V			±0.5	℃
Temperature Resolution of Output Data				0.01		℃

2.2 Electrical Characteristics

Table3: DC Characteristics @V_{DD}=3 V, T=25℃ unless otherwise note

Parameter	Symbol	Conditions		Min	Typ.	Max	Unit
Operation Supply Voltage	V_{DD}			1.8	3.0	3.6	V
Operation Temperature	T_{OP}			-40		85	℃
Average Operation Current (Pressure Measurement under One Conversion per Second)	I_{DDAVP}	OSR*	4096		91.8		μA
			2048		45.9		
			1024		22.9		
			512		11.4		
			256		5.7		
			128		2.9		
Average Operation Current (Temperature measurement under One Conversion per Second)	I_{DDAVT}	OSR*	4096		75.4		μA
			2048		37.7		
			1024		18.8		
			512		9.4		
			256		4.7		
			128		2.4		
Conversion Time of Pressure or Temperature	t_{CONV}	OSR*	4096		65.6	78.7	ms
			2048		32.8	39.4	
			1024		16.4	19.7	
			512		8.2	9.8	
			256		4.1	4.9	
			128		2.1	2.5	
Peak Current	I_{PEAK}	During conversion			1.3		mA
Standby Supply Current	I_{DDSTB}	At 25℃				0.1	μA
Serial Data Clock Frequency	f_{SCLK}	I^2C protocol, pull-up resistor of 10k			100	400	kHz
Digital Input High Voltage	V_{IH}			0.8			V_{DD}
Digital Input Low Voltage	V_{IL}					0.2	V_{DD}
Digital Output High Voltage	V_{OH}	I_O = 0.5 mA		0.9			V_{DD}
Digital Output Low Voltage	V_{OL}	I_O = 0.5 mA				0.1	V_{DD}
Input Capacitance	C_{IN}					4.7	uF

원문: HP203B_DataSheet_EN_V2.0.pdf (media.ncd.io) · 제조사 원문 자료입니다. 사양은 제조사 사정에 따라 변경될 수 있습니다.

*OSR stands for over sampling rate

2.3 Absolute Maximum Rating

Table 4

Parameter	Symbol	Conditions	Min	Max	Unit
Overpressure	P_{MAX}			3	bar
Supply Voltage	V_{DD}		-0.3	3.6	V
Interface Voltage	V_{IF}		-0.3	V_{DD}+0.3	V
Storage Temperature Range	T_{STG}		-50	150	℃
Maximum Soldering Temperature	T_{MS}	40 second maximum		250	℃
ESD Rating		Human body model	-2	+2	kV
Latch-up Current		At 85℃	-100	100	mA

Stresses above those listed as 'absolute maximum ratings' may cause permanent damage to the device. This is a stress rating only and functional operation of the device under these conditions is not implied. Exposure to maximum rating conditions for extended periods may affect device reliability.

3. Function Descriptions

3.1 General Description

The HP203B is a high precision barometer and altimeter that measures the pressure and the temperature by an internal 24-bit ADC and compensates them by a patented algorithm. The fully-compensated values can be read out via the I²C interface by external MCU. The uncompensated values can also be read out in case the user wants to perform their own data compensation. The devices can also compute the value of altitude according to the measured pressure and temperature. Furthermore, the device allows the user to setup the temperature, pressure and altitude threshold values for various events. Once the device detects that a certain event has happened, a corresponding interrupt will be generated and sent to the external MCU. Also, multiple useful interrupt options are available to be used by the user.

3.2 Factory Calibration

Every device is individually factory calibrated for sensitivity and offset for both of the temperature and pressure measurements. The trim values are stored in the on-chip 128-Byte Non-Volatile Memory (NVM). In normal situation, further calibrations are not necessary to be done by the user.

3.3 Automatic power on initialization

Once the device detects a valid VDD is externally supplied, an internal Power-On-Reset (POR) is generated and the device will automatically enter the power-up initialization sequence. After that the device will enter the sleep state. Normally the entire power-up sequence consumes about 400 us.

The user can scan a DEV_RDY bit in the INT_SRC register in order to know whether the device has finished its power-up sequence. This bit appears to 1 when the sequence is done. The device stays in the sleep state unless it receives a proper command from the external MCU. This will help to achieve minimum power consumptions.

원문: HP203B_DataSheet_EN_V2.0.pdf (media.ncd.io) · 제조사 원문 자료입니다. 사양은 제조사 사정에 따라 변경될 수 있습니다.

3.4 Sensor Output Conversion

For each pressure measurement, the temperature is always being measured prior to pressure measurement automatically, while the temperature measurement can be done individually. The conversion results are stored into the embedded memories that retain their contents when the device is in the sleep state.
The conversion time depends on the value of the OSR parameter sent to the device within the ADC_CVT command. Six options of the OSR can be chosen, range from 128, 256 … to 4096. The below table shows the conversion time according to the different values of OSR:

Table 5: Conversion Time VS OSR

OSR	Conversion Time (ms)	
	Temperature	Temperature and Pressure (or Ititude)
128	2.1	4.1
256	4.1	8.2
512	8.2	16.4
1024	16.4	32.8
2048	32.8	65.6
4096	65.6	131.1

The higher OSR will normally achieve higher measuring precision, but consume more time and power.
The conversion results can be compensated or uncompensated. The user can enable/disable the compensation by setting the PARA register before performing the conversions.

3.5 Altitude Computation

The device can compute the altitude according to the measured pressure and temperature. The altitude value is updated and available to read as soon as the temperature and pressure measurement is done.

4. Access Modes & Commands

4.1 Operation Flow

During each power-up/reset cycle, the device will only perform one calibration. After that it will enter the SLEEP state waiting for any incoming commands. It will take actions after receiving different proper commands, and re-enters the SLEEP state when it finishes the jobs.

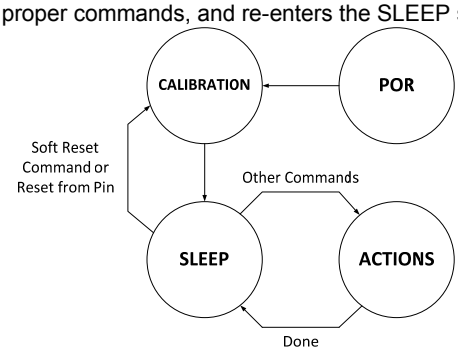

4.2 Command

The Command Set (Table 6) allows the user to control the device to perform the measuring, results reading and the miscellaneous normal operations.

원문: HP203B_DataSheet_EN_V2.0.pdf (media.ncd.io) · 제조사 원문 자료입니다. 사양은 제조사 사정에 따라 변경될 수 있습니다.

4.2.1 Soft Reset the Device

.SOFT_RST (0x06)
Once the user issues this command, the device will immediately be reset no matter what it is working on. Once the command is received and executed, all the memories (except the NVM) will be reset to their default values following by a complete power-up sequence to be automatically performed.

4. 2.2 OSR and Channel Setting

.ADC_CVT (010, 3-bit OSR, 2-bit CHNL)
This command let the device to convert the sensor output to the digital values with or without compensation depends on the PARA register setting. The 2-bit channel (CHNL) parameter tells the device the data from which channel(s) shall be converted by the internal ADC. The options are shown below:

00: sensor pressure and temperature channel
10: temperature channel

The 3-bit OSR defines the decimation rate of the internal digital filter as shown below:

000:	OSR = 4096	011:	OSR = 512
001:	OSR = 2048	100:	OSR = 256
010:	OSR = 1024	101:	OSR = 128

Setting the CHNL bits to the value of 01 or 11, or the OSR bits to the values of 110 or 111 will lead to failure of conversion.

4. 2.3 Read the Temperature and Pressure Values

READ_PT (0x10)
The temperature data is arranged as 20-bit 2's complement format and the unit is in degrees C.Temperature value is stored in all 24 bits of OUT_T_MSB, OUT_T_CSB and OUT_T_LSB. The 4 most significant bits of the 24-bit data is useless, while the 20 least significant bits represent the temperature value. The user shall convert this 20-bit 2's complement binary value into an integer, and then divide the integer by 100 to obtain the final result.
The pressure data is arranged as 20-bit 2's complement format and the unit is in Pascal. Pressure value is stored in all 24 bits of OUT_T_MSB, OUT_T_CSB and OUT_T_LSB. The 4 most significant bits of the 24-bit data is useless, while the 20 least significant bits represent the pressure value. The user shall convert this 20-bit unsigned binary value into an integer, and then divide the integer by 100 to obtain the final result.

For Example :(Temperature)

Hex value	OUT_T_MSB	OUT_T_CSB	OUT_T_LSB	Dec value
0x000A5C	0x00	0x0A	0x5C	26.52
0xFFFC02	0xFF	0xFC	0x02	-10.22

For Example :(Unsigned data pressure)

Hex value	OUT_P_MSB	OUT_P_CSB	OUT_P_LSB	Dec value
0x018A9E	0x01	0x8A	0x9E	1010.22

4. 2.4 Read the Temperature and Altitude Values

.READ_AT (0x11)
The temperature data is arranged as 20-bit 2's complement format and the unit is in degrees C.Temperature value is stored in all 24 bits of OUT_T_MSB, OUT_T_CSB and OUT_T_LSB. The 4 most significant bits of the 24-bit data is useless, while the 20 least significant bits represent the

원문: HP203B_DataSheet_EN_V2.0.pdf (media.ncd.io) · 제조사 원문 자료입니다. 사양은 제조사 사정에 따라 변경될 수 있습니다.

temperature value. The user shall convert this 20-bit 2's complement binary value into an integer, and then divide the integer by 100 to obtain the final result.
The altitude data is arranged as 20-bit 2's complement format and the unit is in meters. Altitude value is stored in all 24 bits of OUT_T_MSB, OUT_T_CSB and OUT_T_LSB. The 4 most significant bits of the 24-bit data is useless, while the 20 least significant bits represent the altitude value. The user shall convert this 20-bit unsigned binary value into an integer, and then divide the integer by 100 to obtain the final result.

For Example :(Altitude)

Hex value	OUT_A_MSB	OUT_A_CSB	OUT_A_LSB	Dec value
0x001388	0x00	0x13	0x88	50.00
0xFFEC78	0xFF	0xEC	0x78	-50.00

4. 2.5 Read the Pressure Value

.READ_P (0x30)

The pressure data is arranged as 20-bit 2's complement format and the unit is in Pascal. Pressure value is stored in all 24 bits of OUT_T_MSB, OUT_T_CSB and OUT_T_LSB. The 4 most significant bits of the 24-bit data is useless, while the 20 least significant bits represent the pressure value. The user shall convert this 20-bit unsigned binary value into an integer, and then divide the integer by 100 to obtain the final result.

4. 2.6 Read the Altitude Value

.READ_A (0x31)

The altitude data is arranged as 20-bit 2's complement format and the unit is in meters. Altitude value is stored in all 24 bits of OUT_T_MSB, OUT_T_CSB and OUT_T_LSB. The 4 most significant bits of the 24-bit data is useless, while the 20 least significant bits represent the altitude value. The user shall convert this 20-bit unsigned binary value into an integer, and then divide the integer by 100 to obtain the final result.

4. 2.7 Read the Temperature Value

.READ_T (0x32)

The temperature data is arranged as 20-bit 2's complement format and the unit is in degrees C.Temperature value is stored in all 24 bits of OUT_T_MSB, OUT_T_CSB and OUT_T_LSB. The 4 most significant bits of the 24-bit data is useless, while the 20 least significant bits represent the temperature value. The user shall convert this 20-bit 2's complement binary value into an integer, and then divide the integer by 100 to obtain the final result.

4. 2.8 Re-calibrate the Internal analog Blocks

.ANA_CAL (0x28)

This command allows the user to re-calibrate the internal circuitries in a shorter time compare to soft resetting the device. It is designed for the applications where the device needs to work in a rapidly changed environment. In those environments, since the temperature and supply voltage may have changed significantly since the first power-up sequence during which the calibrations have been performed, the circuitries may not adept to the world as better as they were just calibrated. Therefore, in this case, re-calibrating the circuitries before performing any sensor conversions can give a more accurate result. Once the device received this command, it calibrates all the circuitries and enters the sleep state when it finishes. The user can simply send this command to the device before sending the ADC_CVT command. However, it is not necessary to use this command when the environment is stable.

원문: HP203B_DataSheet_EN_V2.0.pdf (media.ncd.io) · 제조사 원문 자료입니다. 사양은 제조사 사정에 따라 변경될 수 있습니다.

4. 2.9 Read the Control Registers

.READ_REG (0x80+ register address)
This command allows the user to read out the control registers.

4. 2.10 Write the Control Registers

.WRITE_REG (0xc0 + register address)
This command allows the user to write in the control register

Table6: The Command Set

Name	Hex Code	Binary Code	Descriptions
SOFT_RST	0x06	0000 0110	Soft reset the device
ADC_CVT	NA	010_OSR_chnl	Perform ADC conversion
READ_PT	0x10	0001 0000	Read the temperature and pressure values
READ_AT	0x11	0001 0001	Read the temperature and altitude values
READ_P	0x30	0011 0000	Read the pressure value only
READ_A	0x31	0011 0001	Read the altitude value only
READ_T	0x32	0011 0010	Read the temperature value only
ANA_CAL	0x28	0010 1000	Re-calibrate the internal analog blocks
READ_REG	NA	10_addr	Read out the control registers
WRITE_REG	NA	11_addr	Write in the control registers

5. I²C Interface

The I²C interface is fully compatible to the official I²C protocol specification. All the data are sent starting from the MSB. Successful communication between the host and the device via the I²C bus can be done using the four types of protocol introduced below.

5.1 I²C Specification

Table7: I²C Slave Timing Values

Parameter	Symbol	I²C				Unit
		Condition	Min	Typ.	Max	
SCL Clock Frequency	F_{SCL}	Pull-up = 10 kΩ	0	100	400	kHz
Bus free time between STOP and START condition	t_{BUF}		1.5			μs
Repeated START Hold Time	$t_{HD.STA}$		0.6			μs
Repeated START Setup Time	$t_{SU.STA}$		0.6			μs
STOP Condition Setup Time	$t_{SU.STO}$		0.6			μs
SDA Data Hold Time	$t_{HD.DAT}$		100			ns
SDA Setup Time	$t_{SU.DAT}$		100			ns
SCL Clock Low Time	t_{LOW}		1.5			μs
SCL Clock High Time	t_{HIGH}		0.6			μs
SDA and SCL Rise Time	t_R		30		500	ns
SDA and SCL Fall Time	t_F		30		500	ns

원문: HP203B_DataSheet_EN_V2.0.pdf (media.ncd.io) · 제조사 원문 자료입니다. 사양은 제조사 사정에 따라 변경될 수 있습니다.

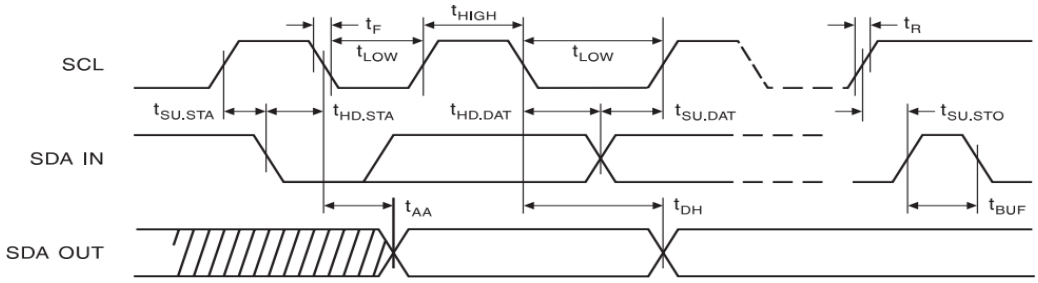

5.2 I²C Device and Register Address

The I²C device address is shown below. The LSB of the device address is determined by the status of the CSB pin:

CSB PIN=0: corresponding to address 0XEE (write) and 0XEF (read).
CSB PIN=1: corresponding to address 0XEC (write) and 0XED (read).

A7	A6	A5	A4	A3	A2	A1	W/R
1	1	1	0	1	1	CSB =0 : 1 CSB =1 : 0	0/1

5.3 I²C Protocol

The 1st TYPE: the host issuing a single byte command to the device

The host shall issue the Device Address (ID) followed by a Write Bit before sending a Command byte. The device will reply an ACK after it received a correct SOFT_RST command.

	1	1	1	0	1	1	/CSB	0	0	0	0	0	0	0	1	1	0	0	
S	Device Address							W	A	Command								A	P

The 2nd TYPE: the host writing a register inside the device

The host shall issue the Device Address (ID) followed by a Write Bit before sending a command byte and a data byte. This format only applies while the user wants to send the WRITE_REG command.

	1	1	1	0	1	1	/CSB	0	0	1	1	0	0	1	0	1	0	0	0	0	0	0	0	1	1	0	0	
S	Device Address							W	A	Command								A	Data								A	P

The 3rd TYPE: the host reading a register from the device

In this activity there are two frames that are sent separately. The first frame is to send the READ_REG command which contains a 2-bit binary number of 10 followed by a 6-bit register address. The format of the first frame is identical to the 1st type activity. In the second frame, the device will send back the register data after receiving the correct device address followed by a read bit. This format only applies while the user wants to use the READ_REG command.

	1	1	1	0	1	1	/CSB	0	0	1	0	0	0	0	1	1	0	0	
S	Device Address							W	A	Command								A	P

원문: HP203B_DataSheet_EN_V2.0.pdf (media.ncd.io) · 제조사 원문 자료입니다. 사양은 제조사 사정에 따라 변경될 수 있습니다.

	1	1	1	0	1	1	/CSB	1	0	1	0	0	1	0	1	1	0	1	
S	Device Address							R	A	Data								N	P

The 4th type: the host reading the 3-byte or 6-byte ADC data from the device

In this activity there are two frames that are sent separately. The first frame is identical to sending a single command, which can be one of the conversion result reading commands. In the second frame, the device will send back the ADC data (either 3 bytes or 6 bytes depending on the commands) after receiving the correct Device Address followed by a Read Bit.

	1	1	1	0	1	1	/CSB	0	0	0	0	0	0	0	1	1	0	0	
S	Device Address							W	A	Command								A	P

	1	1	1	0	1	1	/CSB	1	0	0	1	0	0	0	1	1	0	0		0	0	1	1	0	1	0	0	1	
S	Device Address							R	A	Data Byte 6 or 3								A		Data Byte 0								N	P

Bit Descriptions

	From Host		From Chip
S	Start Bit	P	Stop Bit
W	Write	R	Read
A	ACK	N	NACK
CSB	Sensor CSB PIN		

원문: HP203B_DataSheet_EN_V2.0.pdf (media.ncd.io) · 제조사 원문 자료입니다. 사양은 제조사 사정에 따라 변경될 수 있습니다.

6. Control Registers

The control registers allow the user to set the threshold values for various event detections, configure the interrupt setting, and enable/disable the data compensation. It is recommended for the user to set these registers to the desired values before performing the conversions or any other command-based operations. The following is a table of all the control registers.

The registers from 0x00 to 0x0A are designed for the user to setup the parameters (offset and thresholds) for pressure (or altitude) and temperature event detections. The registers from 0x0B to 0x0D are used for interrupt controls. The register of 0x0E is dedicated for switching on/off the sensor output compensation function inside the device.

Table 8: Control Registers List

Addr	Name	Default	Bit 7	Bit 6	Bit 5	Bit 4	Bit 3	Bit 2	Bit 1	Bit 0
0x00	ALT_OFF_LSB	0x00	ALT_OFF [7:0]							
0x01	ALT_OFF_MSB	0x00	ALT_OFF [15:8]							
0x02	PA_H_TH_LSB	0x00	PA_H_TH [7:0]							
0x03	PA_H_TH_MSB	0x00	PA_H_TH [15:8]							
0x04	PA_M_TH_LSB	0x00	PA_M_TH [7:0]							
0x05	PA_M_TH_MSB	0x00	PA_M_TH [15:8]							
0x06	PA_L_TH_LSB	0x00	PA_L_TH [7:0]							
0x07	PA_L_TH_MSB	0x00	PA_L_TH [15:8]							
0x08	T_H_TH	0x00	T_H_TH [7:0]							
0x09	T_M_TH	0x00	T_M_TH [7:0]							
0x0A	T_L_TH	0x00	T_L_TH [7:0]							
0x0B	INT_EN	0x00	Reserved	Reserved	PA_RDY_EN	T_RDY_EN	PA_TRAV_EN	T_TRAV_EN	PA_WIN_EN	T_WIN_EN
0x0C	INT_CFG	0x00	Reserved	PA_MODE	PA_RDY_CFG	T_RDY_CFG	PA_TRAV_CFG	T_TRAV_CFG	PA_WIN_CFG	T_WIN_CFG
0x0D	INT_SRC	0x00	TH_ERR	DEV_RDY	PA_RDY	T_RDY	PA_TRAV	T_TRAV	PA_WIN	T_WIN
0x0E	INT_DIR	0x00	CMPS_EN	Reserved	Reserved	Reserved	P_TRAV_DIR	T_TRAV_DIR	P_WIN_DIR	T_WIN_DIR
0X0F	PARA	0X80	CMPS_EN	Reserved	Reserved	Reserved	Reserved	Reserved	Reserved	Reserved

6.1 Setup the Altitude Offset Compensation Parameter

6.1.1 ALT_OFF_LSB, ALT_OFF_MSB - (RW)

The two registers form the 16-bit value of ALT_OFF, which saves the altitude offset data used to compensate the altitude calculation. The data is in 2's complement format and the unit is in centimeter. The users need to set these registers if they need to use the altitude computation function of the device.
Normally, the values of the local average standard atmospheric pressure (P_{local}) may vary in different places around the world. The varying range is from 1000 mbar to 1026 mbar. The device requires the user to setup the ALT_OFF to remove the offset. The following table is provided to assist to finding the value of desired altitude offset.

원문: HP203B_DataSheet_EN_V2.0.pdf (media.ncd.io) · 제조사 원문 자료입니다. 사양은 제조사 사정에 따라 변경될 수 있습니다.

P_{local} has unit in mbar, A_{offset} has unit in meter

P_{local}	1000	1001	1002	1003
A_{offset}	-111.18	-102.73	-94.29	-85.85
P_{local}	1004	1005	1006	1007
A_{offset}	-77.43	-69.02	-60.62	-52.23
P_{local}	1008	1009	1010	1011
A_{offset}	-43.84	-35.47	-27.11	-18.76
P_{local}	1012	1013	1014	1015
A_{offset}	-10.41	-2.08	6.24	14.56
P_{local}	1016	1017	1018	1019
A_{offset}	22.86	31.15	39.44	47.71
P_{local}	1020	1021	1022	1023
A_{offset}	55.98	64.23	72.48	80.71
P_{local}	1024	1025	1026	
A_{offset}	88.94	97.16	105.36	

If the users find out that the value of P_{local} is an integer, they can directly obtain the corresponding altitude offset value in the above table; if the P_{local} has decimal numbers and the value is larger than P_1 and smaller than P_2 (P_1 and P_2 are two adjacent pressure values in the table), the user shall first obtain the corresponding altitude offset value A_1 and A_2 in the table, than use either of the following two formulas to calculate the desired altitude offset value A:

$A = A_1 + 8.326 \times (P_{local} - P_1)$, or $A = A_2 - 8.326 \times (P_2 - P_{local})$

For example, the P_{local} is 1016.4 mbar, which is between 1016 mbar (P_1) and 1017 mbar (P_2). Looking up the table, A_1 is 22.86 m and A_2 is 31.15 m. Thus:

$A = 22.86 + 8.326 \times (1016.4 - 1016) = 26.19$ m, or $A = 31.15 - 8.326 \times (1017 - 1016.4) = 26.15$ m

Either of the results is acceptable. After obtaining the value of A, no matter by looking up the table directly or by calculation, the user shall multiply the A by 100 in order to convert the unit from meter to centimeter.
Finally, convert the result to a 2's complement number to obtain ALT_OFF, and fill it into the two registers. The following table shows 2 examples with the calculated altitude offsets and their corresponding values to fill into the two registers.

For Example:

Offset	Hex Value	ALT_OFF_MSB	ALT_OFF_LSB
50.02 m	0x138A	0x13	0x8A
-100.05 m	0XD8EB	0xD8	0xEB

6.2 Setup the Events Detection Parameters

6.2.1 PA_H_TH_LSB, PA_H_TH_MSB - (RW)

The two registers form the 16-bit value of PA_H_TH which saves the pressure (or altitude) upper bound threshold for event detection. When the PA_MODE bit in the INT_CFG register is set to 0, the contents stored in these registers are the pressure thresholds. Its value should be a 16-bit unsigned

원문: HP203B_DataSheet_EN_V2.0.pdf (media.ncd.io) · 제조사 원문 자료입니다. 사양은 제조사 사정에 따라 변경될 수 있습니다.

number and its unit is in 0.02 mbar. When setting the pressure thresholds, the user must divide the actual thresholds by 0.02, and then convert the result to a 2's complement number. When the PA_MODE bit is set to 1, the contents stored in these registers are the altitude thresholds. Its value should be a 16-bit 2's complement number and its unit is in meter.

For Example:

PA_MODE = 0 (pressure, unit in 0.02 mbar)			
Threshold	Hex Value	PA_H_TH_MSB	PA_H_TH_LSB
800.06 mbar	0x9C43	0x9C	0x43
900 mbar	0xAFC8	0xAF	0xC8
PA_MODE = 1 (altitude, unit in meter)			
Threshold	Hex Value	PA_H_TH_MSB	PA_H_TH_LSB
5000 m	0x1388	0x13	0x88

These examples are also applied to setting the pressure (or altitude) middle and lower bound threshold registers as introduced below.

6.2.2 PA_M_TH_LSB, PA_M_TH_MSB - (RW)

The two registers form the 16-bit value of PA_M_TH which saves the pressure (or altitude) middle threshold for event detection. Similar to the PA_H_TH, the meaning of their values and the data formats are selected by the PA_MODE bit.

6.2.3 PA_L_TH_LSB, PA_L_TH_MSB - (RW)

The two registers form the 16-bit value of PA_L_TH which saves the pressure (or altitude) lower bound threshold for event detection. Similar to the PA_H_TH, the meaning of their values and the data formats are selected by the PA_MODE bit.

6.2.4 T_H_TH - (RW)

This register stores the 8-bit temperature threshold for event detection. The data is in 2's complement format and the unit is in ℃.

For Example:

Threshold	Hex Value	T_H_TH
45℃	0x2D	0x2D
-20℃	0xEC	0xEC

These examples are also applied for setting the temperature middle and lower bound threshold registers as introduced below.

6.2.5 T_M_TH - (RW)

This register stores the 8-bit temperature middle threshold for event detection. The data is in 2's complement format and the unit is in ℃.

6.2.6 T_L_TH - (RW)

This register stores the 8-bit temperature lower bound threshold for event detection. The data is in 2's complement format and the unit is in ℃.

6.2.7 Improper Setting of Thresholds

Improperly setting the thresholds, such as setting the lower bound threshold to be larger than the upper bound threshold, will lead to unexpected behavior of the device. It is recommended for the user to check the status of the TH_ERR bit in the INT_SRC register after setting the thresholds into the device. Logic 1 of this bit indicates that improper setting of the thresholds occurs.

원문: HP203B_DataSheet_EN_V2.0.pdf (media.ncd.io) · 제조사 원문 자료입니다. 사양은 제조사 사정에 따라 변경될 수 있습니다.

6.3 Configure the Interrupts

There are 6 interrupts that can be generated by the device.

6.3.1 PA_RDY

Indicates that the pressure (or altitude) measurement is done and the result is ready to read.

6.3.2 T_RDY

Indicate that the temperature measurement is done and the result is ready to read.

6.3.3 PA_TRAV

Indicate that the pressure (or altitude) value has traversed the middle threshold during the last measurement.

6.3.4 T_TRAV

Indicate that the temperature value has traversed the middle threshold during the last measurement.

6.3.5 PA_WIN

Indicate that the pressure (or altitude) value locates outside the pre-defined window (the value in between the upper bound and lower bound thresholds) during the last measurement.

6.3.6 T_WIN

Indicate that the temperature value locates outside the pre-defined window (the value in between the upper bound and lower bound thresholds) during the last measurement.
The interrupt names prefixed by a 'PA' relate to the pressure (or altitude) measurement. The interrupt names prefixed by a 'T' relate to the temperature measurement. These interrupts are all active-high and will remain high until the interrupt-clearing conditions happen. The interrupt-clearing conditions are that the device has received a new ADC result-reading command or a new ADC conversion command. There are three registers available for the interrupt controls as shown below.

6.3.7 INT_EN - (RW)

The INT_EN register allows the user to disable/enable each of the 6 interrupts (0: disable, 1: enable). When the users need enable the traversal or window interrupt, they must also enable the corresponding PA_RDY_EN or T_RDY_EN bit.

6.3.8 INT_CFG - (RW)

The INT_CFG register allows the user to select whether to output the interrupts from the INT1 pin (0: do not output, 1: output). The register also contains a control bit 'PA_MODE' that selects whether the event detection parameters and the interrupts registers prefixed by a 'PA_' corresponds to the pressure or the altitude measurement (0: pressure, 1: altitude).

6.3.9 INT_SRC - (Read-only)

The INT_SRC register contains the interrupt flags that allow the user to know the interrupts status, as well as a device status bit 'DEV_RDY' that tells whether the device is ready for access or not. The device is ready when it is in the sleep state and is not performing the power-up sequence, the data conversions, and any other command-based operations. The external MCU shall only access to the device while the device is ready (DEV_RDY = 1).
If the INT_CFG bit is set to 0 while the INT_EN bit is set to 1, the corresponding interrupt flag will appear in the INT_SRC register but the interrupt will not be output to the INT1 pin.

6.3.10 INT_DIR - (Read-only)

The INT_DIR register allows the user to check the details of the traversal or window interrupt events.
For the T_WIN_DIR and the P_WIN_DIR status bits, when the window interrupts happen, if the temperature or pressure value is above the window, the corresponding status bit is read as 1; if the value is below the window, the status bit is read as 0.
For the T_TRAV_DIR and the P_TRAV_DIR status bits, when the traversal interrupts happen, if the temperature, pressure or altitude value has been rising from low to high, the corresponding status bit

원문: HP203B_DataSheet_EN_V2.0.pdf (media.ncd.io) · 제조사 원문 자료입니다. 사양은 제조사 사정에 따라 변경될 수 있습니다.

is read as 1; if the value has been falling from high to low, the status bit is read as 0.
Figure 2 shows how the 6 interrupts sources are controlled and mapped to the 2 interrupt output pins. It can be seen that, the 'traversal' and 'window' interrupts can only be set high while the corresponding 'ready' interrupts are enabled and set high.
On the other hand, the status of the TH_ERR, DEV_RDY and the four INT_DIR bits are only readable via registers without interrupt signals output to the pins.

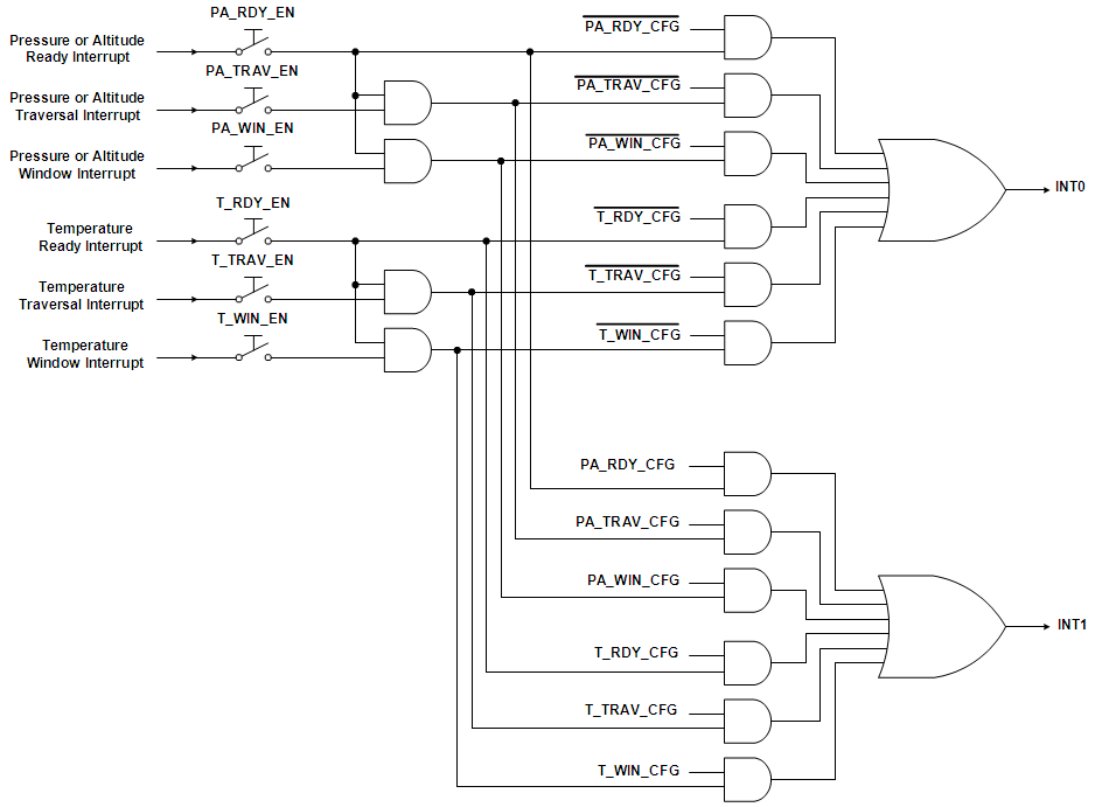

Figure 2: Interrupts mapping diagram

6.3.11 INTERRUPTS GENERATION

The T related interrupts are generated as soon as the temperature conversion is finished. This means that once the external MCU detect the T interrupts, the temperature conversion result is valid to read.
The PA related interrupts are generated as soon as the pressure conversion is finished. This means that once the external MCU detect the PA interrupts, the pressure conversion result is valid to read. However, an additional 5 us is required to compute the altitude based on the temperature and pressure conversion results. Therefore, after detecting the PA interrupts, the MCU must wait another 5 us before reading the A computation result.

6.3.12 INTERRUPTS CLEARING

The ADC_CVT, READ_PT or READ_AT command will clear the T_RDY and PA_RDY interrupts. Once the 'RDY' interrupt is cleared, the 'WIN' and 'TRAV' interrupts will be cleared at the same time. However, the 'WIN', 'TRAV' and 'DIR' register bits will remain their values until a new conversion is done.
The READ_P or READ_A command will only clear the PA_RDY interrupt. The T related interrupt and register bits will not be changed by these 2 commands.
The READ_T command will only clear the T_RDY interrupt. The PA related interrupt and register bits

원문: HP203B_DataSheet_EN_V2.0.pdf (media.ncd.io) · 제조사 원문 자료입니다. 사양은 제조사 사정에 따라 변경될 수 있습니다.

will not be changed by this command.
The SOFT_RST will clear all the interrupts as well as the related register bits.
The interrupts are cleared once the device has confirmed a valid command is received. However, this does not necessarily mean that an interrupt must go low after a command is fully transmitted. For example, while an interrupt is being cleared by an ADC reading command, it goes low while the data is being sent back from the device to the external MCU.

6.4 Enable the Compensation

PARA - (RW)
This register has only one valid bit of CMPS_EN. The user can use this bit to determine whether to enable the data compensation during the conversion process (0: disable, 1: enable). If it is enabled, the 24-bit or 48-bit data read out by the commands are fully compensated. If it is disabled, the data read out are the raw data output.

7. Typical Application Circuit

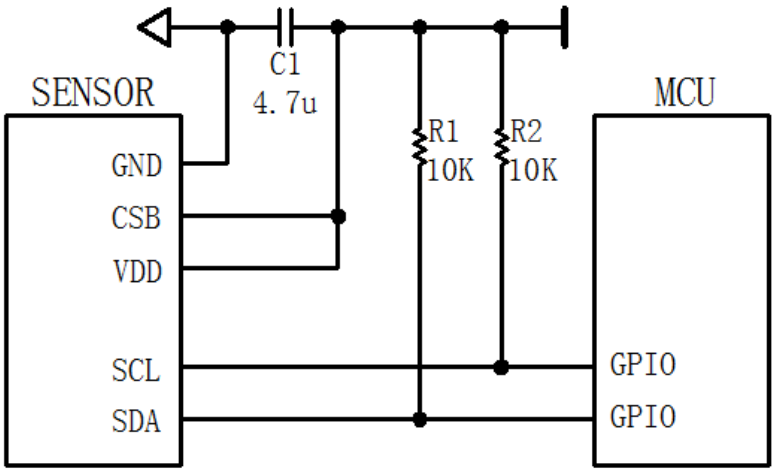

Figure3: Typical application circuit

원문: HP203B_DataSheet_EN_V2.0.pdf (media.ncd.io) · 제조사 원문 자료입니다. 사양은 제조사 사정에 따라 변경될 수 있습니다.

8. Package Information

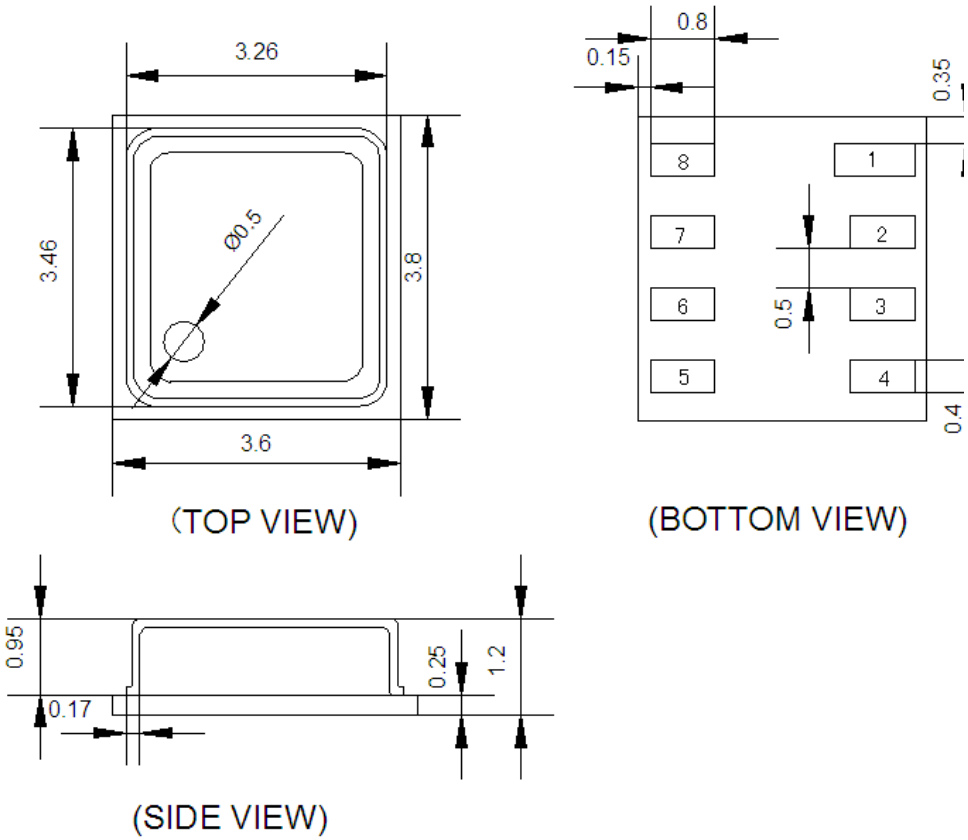

9. Pin Configuration

Table.9 – Pin Descriptions

Pin	Name	I/O	Function
1	INT1	O	Interrupt 1 output pin
2	GND	I	Ground
3	VDD	I	power supply
4	NC	-	NO Connect
5	SCL	I	I²C serial clock input pin
6	SDA	IO	I²C serial bi-directional data pin
7	INT0	O	Interrupt 0 output pin
8	CSB	I	I²C device address select pin

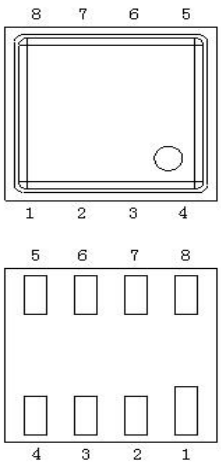

원문: HP203B_DataSheet_EN_V2.0.pdf (media.ncd.io) · 제조사 원문 자료입니다. 사양은 제조사 사정에 따라 변경될 수 있습니다.

10. Tape and Reel Specifications

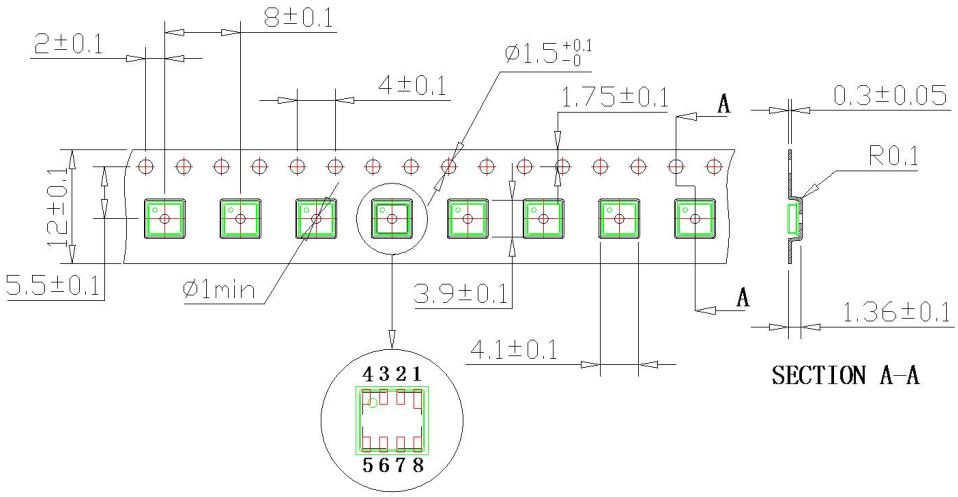

HOPE MICROELECTRONICS CO.,LTD
Add: 2/F, Building 3, Pingshan Private Enterprise Science and Technology Park, Lishan Road, XiLi Town, Nanshan District, Shenzhen, Guangdong, China
Tel: +86 755 82973805
Fax: +86 755 82973550
Email: sales@hoperf.com
Website: http://www.hoperf.com
http://www.hoperf.cn

This document may contain preliminary information and is subject to change by Hope Microelectronics without notice. Hope Microelectronics assumes no responsibility or liability for any use of the information contained herein. Nothing in this document shall operate as an express or implied license or indemnity under the intellectual property rights of Hope Microelectronics or third parties. The products described in this document are not intended for use in implantation or other direct life support applications where malfunction may result in the direct physical harm or injury to persons. NO WARRANTIES OF ANY KIND, INCLUDING, BUT NOT LIMITED TO, THE IMPLIED WARRANTIES OF MECHANTABILITY OR FITNESS FOR A ARTICULAR PURPOSE, ARE OFFERED IN THIS DOCUMENT.

©2013, HOPE MICROELECTRONICS CO.,LTD. All rights reserved.
Rev:HP203B_DataSheet_EN_V2.0

원문: HP203B_DataSheet_EN_V2.0.pdf (media.ncd.io) · 제조사 원문 자료입니다. 사양은 제조사 사정에 따라 변경될 수 있습니다.