SENSIRION
THE SENSOR COMPANY

Datasheet SDP8xx-Digital

Digital Differential Pressure Sensor

- Excellent repeatability, no drift, no offset
- Extended feature set – smart averaging
- Calibrated and temperature compensated

Product Summary

The SDP800 sensor family is Sensirion's series of digital differential pressure sensors designed for high-volume applications. The sensors measure the pressure of air and non-aggressive gases with superb accuracy and no offset drift. The sensors cover a pressure range of up to ±500 Pa (±2 inch H_2O / ±5 mbar) and deliver outstanding accuracy, also at the bottom end of the measuring range.
The SDP800 features a digital 2-wire interface, which makes it easy to connect directly to a microprocessor.
The outstanding performance of these sensors is based on Sensirion's patented CMOSens® sensor technology, which combines the sensor element, signal processing and digital calibration on a small CMOS chip. The differential pressure is measured by a thermal sensor element using flow-through technology. The well-proven CMOS technology is perfectly suited for high-quality mass production and is the ideal choice for demanding and cost-sensitive OEM applications.

Benefits of Sensirion's CMOSens® Technology

- High reliability and long-term stability
- Best signal-to-noise ratio
- Industry-proven technology with a track record of more than 15 years
- Designed for mass production
- High process capability

Content

1. Sensor Performance 2
2. Specifications 3
3. Pin Assignment 4
4. Measurement Modes 5
5. Digital Interface Description 6
6. Package Outline 11
7. Soldering 12
8. Shipping Package 13
9. Ordering Information 13
Revision History 13
Important Notices 14
Headquarters and Subsidiaries 14

원문: SDP8XX 데이터시트 (media.ncd.io) · 제조사 원문 자료입니다. 사양은 제조사 사정에 따라 변경될 수 있습니다.

we measure, we calibrate, we validate.
㈜테솔 · www.tessol.com TS-TL-NCD-366 1 / 14
KOLAS 국제공인교정기관 · ISO/IEC 17025

SENSIRION
THE SENSOR COMPANY

1. Sensor Performance

1.1 Differential Pressure Specification[1]

Parameter	SDP800/SDP810-500Pa	SDP800/SDP810-125Pa
Measurement range [2]	-500 to 500 Pa (-2 to 2 inH_2O)	-125 to 125 Pa (-0.5 to 0.5 inH_2O)
Zero point accuracy [3,4]	0.1 Pa	0.08 Pa
Span accuracy [3,4]	3% of reading	3% of reading
Zero point repeatability [4]	0.05 Pa	0.04 Pa
Span repeatability [4]	0.5% of reading	0.5% of reading
Span shift due to temperature variation	< 0.5% of reading per 10°C	< 0.5% of reading per 10°C
Offset stability	< 0.05 Pa/year	< 0.05 Pa/year
Flow step response time (τ_{63})	< 3ms	
Resolution	16 bit	
Calibrated for	Air, N_2	
Media compatibility	Air, N_2, O_2, non-condensing	
Calibrated temperature range	-20 °C to +85 °C	

1.2 Temperature Specification[5]

Parameter	Value
Measurement range	-40 °C to +85 °C
Resolution	16 bit
Accuracy	2 °C (-10 °C to +60 °C) 3 °C (-40 °C to +85 °C)
Repeatability	0.1°C

[1] Unless otherwise noted, all sensor specifications are valid at 25°C with VDD = 3.3 V and absolute pressure = 966 mbar.
[2] For other pressure ranges contact Sensirion
[3] Includes repeatability
[4] Total accuracy/repeatability is a sum of zero-point and span accuracy/repeatability.
[5] The measured temperature is the temperature of the bulk silicon in the sensor. This temperature value is not only depending on the gas temperature, but also on the sensor's surroundings. Using the signal to measure solely the gas temperature will need special precautions, such as isolating the sensor from external temperate influences.

원문: SDP8XX 데이터시트 (media.ncd.io) · 제조사 원문 자료입니다. 사양은 제조사 사정에 따라 변경될 수 있습니다.

SENSIRION
THE SENSOR COMPANY

2. Specifications

2.1 Electrical Specifications

Parameter	Symbol	Condition	Min.	Typ.	Max.	Units	Comments
Supply Voltage	V_{DD}		2.7		5.5	V	
Power-up/down level	V_{POR}		2.3	2.5	2.7	V	
Supply current	I_{DD}	Measuring		3.8	5.5	mA	
		Idle state			1.1	mA	
		Sleep mode			1	uA	

2.2 Timing Specifications

Parameter	Symbol	Condition	Min.	Typ.	Max.	Units	Comments
Power-up time	t_{PU}				25	ms	Time to sensor ready
Soft reset time	t_{SR}				2	ms	Time between soft reset command or exit sleep mode and sensor ready
I2C SCL frequency	f_{I2C}			400	1000	kHz	
Update rate differential pressure value		Continuous mode	1800	2000	2200	Hz	
Update rate temperature value		Continuous mode	112.5			Hz	Temperature value is updated at least every 16 pressure values
Measurement time		Triggered mode	40	45	50	ms	

2.3 Mechanical Specifications

Parameter	Symbol	Condition	Min.	Typ.	Max.	Units	Comments
Allowable overpressure	P_{max}				1	bar	
Rated burst pressure	P_{burst}		5			bar	
Weight	W				6	g	

2.4 Materials

Parameter	
Wetted materials	PBT (polybutylene terephthalate), glass (silicon nitride, silicon oxide), silicon, gold, FR4, silicone as static sealing, epoxy, copper alloy, lead-free solder
REACH, RoHS	REACH and RoHS compliant

2.5 Absolute Minimum and Maximum Ratings

Parameter	Rating	Units
Supply Voltage V_{DD}	-0.3 to 5.5	V
Max Voltage on pins (SDA, SCL)	-0.3 to V_{DD}+0.3	V
Input current on any pin	±70	mA
Operating temperature range[1]	-40 to +85	°C
Storage temperature range	-40 to +85	°C
Max. humidity for long term exposure	40°C dew point	
ESD HBM (human body model)	2	kV

[1] For Air and N_2. Long term exposure to (high concentrations of) O_2 at high temperatures can reduce the product lifetime

원문: SDP8XX 데이터시트 (media.ncd.io) · 제조사 원문 자료입니다. 사양은 제조사 사정에 따라 변경될 수 있습니다.

we measure, we calibrate, we validate.
㈜테솔 · www.tessol.com TS-TL-NCD-366 3 / 14
KOLAS 국제공인교정기관 · ISO/IEC 17025

SENSIRION
THE SENSOR COMPANY

3. Pin Assignment

The pin assignments of the SDP8xx-Digital can be found in Table 1

Pin no.	Name	Description
1	SCL	Serial Clock (I^2C Interface)
2	VDD	VDD Supply
3	GND	Connect to ground
4	SDA	Bidirectional Serial Data (I^2C Interface)

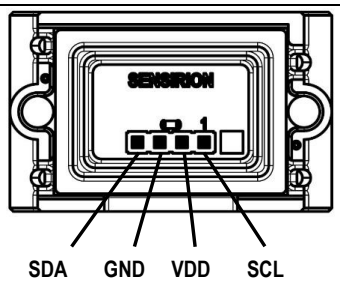

Table 1: *SDP8xx-Digital pin assignment (bottom view).*

원문: SDP8XX 데이터시트 (media.ncd.io) · 제조사 원문 자료입니다. 사양은 제조사 사정에 따라 변경될 수 있습니다.

we measure, we calibrate, we validate.
KOLAS 국제공인교정기관 · ISO/IEC 17025
㈜테솔 · www.tessol.com TS-TL-NCD-366 4 / 14

SENSIRION
THE SENSOR COMPANY

4. Measurement Modes

The SDP8xx-Digital is a highly versatile differential pressure sensor and is very flexible regarding the measurement speed. This flexibility not only allows for optimizing the sensor's performance to a specific application, but also for adapting the sensor to different use cases. For example, in one use case the sensor is detecting the smallest and quickest changes, whereas at another time the sensor can measure in larger intervals while consuming only little energy.

4.1 Continuous Mode vs Triggered Mode

In continuous mode the sensor is measuring at the highest speed and writes the measurement values to the I²C results buffer, where the I²C master can read out the value when it requires.
In triggered mode the sensor is default in an idle state and wakes up when the command is sent. It then powers up the heater and does a measurement. During this time the sensor doesn't acknowledge any I²C read header or stretches the clock. When the measurement is finished the sensor returns to the idle state and makes the measurement result available to be read out.
For more details see chapter 5.3.3.

	Continuous mode	Triggered mode
Description	Measures continuously	Measures once after command is sent
Measurement speed and rate	Measurement result can be read out continuously and at any time, but not faster than 0.5ms.	Measurement result is available in +/- 45ms after command. Clock stretching is available.
Measurement method	Sensor configuration is optimized for speed and accuracy.	Sensor configuration is optimized for low power consumption.
Recommended use	Best used where speed and accuracy are most important.	Best used where energy consumption is more important than speed.

4.2 Continuous Mode and 'Average till Read'

In continuous measurement modes a new measurement result is available every 0.5ms. A new value can be read out every 0.5ms.
If the 'average till read' option is chosen, the sensor averages all values (x_i) prior to the read out. This has the benefit that the user can read out the sensor at its own desired speed, without losing information and thus prevents aliasing. During the first 25 ms of averaging the averaged value is obtained as the arithmetic mean.

$$\bar{x} = \sum_{i=1}^{N} \frac{x_i}{N} \qquad \text{for } t < 25 \text{ ms}$$

When the reading speed is even slower than 25 ms, the sensor will continue to average, but with another algorithm. In this algorithm exponential smoothing is used, with a smoothing factor α = 0.05.

$$S_k = \alpha \cdot x_i + (1 - \alpha) \cdot S_{k-1}, \qquad S_0 = \bar{x}, \qquad \text{for } t > 25 \text{ ms}$$

Where S_0 is the arithmetic value after the first 25 ms.

Please refer to relevant literature for more information about exponential smoothing.

4.3 Temperature Compensation Modes and Absolute Pressure Dependency

The SDP8xx is temperature compensated both for differential pressure and for mass flow compensated differential pressure. In use cases where the SDP8xx is used to measure mass flow it is advised to use mass flow temperature compensation. In this case no absolute pressure compensation is required.
For more information about temperature and absolute pressure compensation for differential pressure sensors, for example volume flow measurements in bypass, refer to the selection guide in the differential pressure download center on our website.

원문: SDP8XX 데이터시트 (media.ncd.io) · 제조사 원문 자료입니다. 사양은 제조사 사정에 따라 변경될 수 있습니다.

we measure, we calibrate, we validate.
㈜테솔 · www.tessol.com TS-TL-NCD-366 5 / 14
KOLAS 국제공인교정기관 · ISO/IEC 17025

SENSIRION
THE SENSOR COMPANY

5. Digital Interface Description

The SDP8xx-digital interface is compatible with the I²C protocol. This chapter describes the command set for SDP8xx-digital. For detailed information about the I²C protocol, please check the document "NXP I²C-bus specification and user manual".

5.1 I²C Address

The I²C address for SDP8xx-digital is 0x25 (b 0100101). The address is followed by a read or write bit.
For other I²C addresses contact Sensirion.

5.2 I²C Sequences

The commands are 16-bit. Data is read from the sensor in multiples of 16-bit words, each followed by an 8-bit checksum to ensure communication reliability.

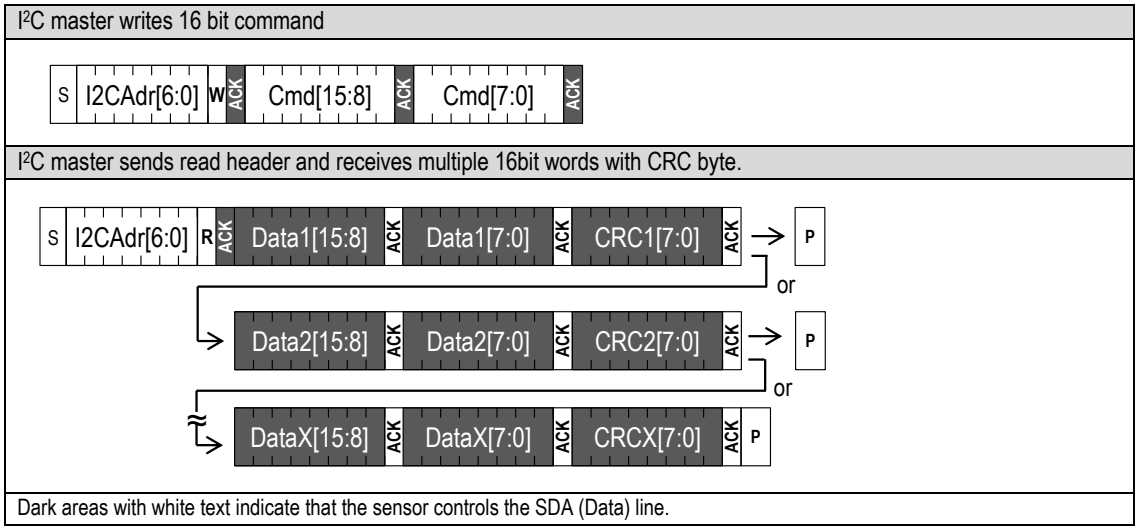

I²C sequences can be aborted with a NACK and STOP condition.

5.3 I²C Commands

The command set of the SDP8xx-digital consists of a set of different commands:

- Continuous measurement
  - Start Continuous measurement commands
  - Stop measurement command
- Triggered measurement commands
- Soft reset
- Entering and exiting sleep mode
- Read product identifier and serial number

원문: SDP8XX 데이터시트 (media.ncd.io) · 제조사 원문 자료입니다. 사양은 제조사 사정에 따라 변경될 수 있습니다.

we measure, we calibrate, we validate.
㈜테솔 · www.tessol.com TS-TL-NCD-366 6 / 14
KOLAS 국제공인교정기관 · ISO/IEC 17025

SENSIRION
THE SENSOR COMPANY

5.3.1 Start Continuous Measurement

The sensor measures both the differential pressure and temperature. Both measurement results can be read out through one single I²C read header.
Continuous measurements can be started up in different configurations by a set of commands.

Command code (Hex)	Temperature compensation	Averaging
0x3603	Mass flow	Average till read
0x3608	Mass flow	None - Update rate 0.5ms
0x3615	Differential pressure	Average till read
0x361E	Differential pressure	None - Update rate 0.5ms

After one of the commands has been sent, the chip continuously measures and updates the measurement results. New results can be read continuously with only an I²C read header. (Measurement) commands must not be sent until the stop measurement command has been sent.
After the start measurement command is sent:

- the first measurement result is available after 8ms.
- small accuracy deviations (few % of reading) can occur during the next 12ms.

When no measurement data is yet available the sensor will respond with a NACK to the I²C read header (I²C address + read bit).

Preceding command	Consecutive read	Description
continuous measurement	Byte1: DP 8msb Byte2: DP 8lsb Byte3: CRC Byte4: Temp 8msb Byte5: Temp 8lsb Byte6: CRC Byte7: Scale Factor differential pressure 8msb Byte8: Scale Factor differential pressure 8lsb Byte9: CRC	After a start continuous measurement commands, the measurement results can be read out. The temperature and scale factor don't need to be read out (every time). The read sequence can be aborted by a NACK and a STOP condition. The scale factor is for differential pressure in Pascal.

5.3.2 Stop Continuous Measurement

Command	Command code (Hex)	Description
Stop continuous measurement	0x3FF9	This command stops the continuous measurement and puts the sensor in idle mode. It powers off the heater and makes the sensor receptive to another command after 500us. The Stop command is also required when switching between different continuous measurement commands.

When the sensor is in continuous measurement mode, the sensor must be stopped before it can accept another command. The only exception is the soft reset command as described in section 5.3.4.

In idle mode the sensor will consume less power, but consider the sleep mode for most effective energy saving.

원문: SDP8XX 데이터시트 (media.ncd.io) · 제조사 원문 자료입니다. 사양은 제조사 사정에 따라 변경될 수 있습니다.

SENSIRION
THE SENSOR COMPANY

5.3.3 Triggered Measurement

During a triggered measurement the sensor measures both differential pressure and temperature. The measurement starts directly after the command has been sent. The command needs to be repeated with every measurement.

Command code (Hex)	Temperature compensation	Clock stretching
0x3624	Mass flow	
0x3726	Mass flow	Yes
0x362F	Differential pressure	
0x372D	Differential pressure	Yes

During the 45ms that the sensor is measuring, no command can be sent to the sensor. After the 45ms the result can be read out and any command can be sent to the sensor.
Monitoring whether or not the sensor is ready with its measurement can be done with the following methods.

Method	Available	Description
Clock stretching	Only for clock stretching commands	The sensor starts the measurement after the triggered measurement command with clock stretching. When an I²C read header is sent within 45ms the sensor performs clock stretching after acknowledging the read header. When the sensor has finished the measurement, it makes the result available by releasing the SCL.
Polling	Only for non-clock stretching commands	In this mode the sensor does not acknowledge (NACK) an I²C read header as long as no measurement result is available.

When new measurement data is available it can be read out by sending an I²C read header and reading out the data from the sensor. In the table below the data layout of the results can be found.

Preceding command	Consecutive read	Description
Triggered measurement	Byte1: DP 8msb Byte2: DP 8lsb Byte3: CRC Byte4: Temp 8msb Byte5: Temp 8lsb Byte6: CRC Byte7: Scale Factor differential pressure 8msb Byte8: Scale Factor differential pressure 8lsb Byte9: CRC	After a triggered measurement command, the results can be read out when the sensor is finished with the measurement. The temperature and scale factor don't need to be read out (every time). The read sequence can be aborted by a NACK and a STOP condition. The scale factor is for differential pressure in Pascal.

5.3.4 Soft Reset

Command	I²C address + W bit + command code (Hex)	Consecutive read	Description
General call reset	0x0006	NA	This sequence resets the sensor with a separate reset block, which is as much as possible detached from the rest of the system on chip. Note that the I²C address is 0x00, which is the general call address, and that the command is 8 bit. The reset is implemented according to the I²C specification.

After the reset command the sensor will take maximum 2ms to reset. During this time the sensor will not acknowledge its address nor accept commands.

원문: SDP8XX 데이터시트 (media.ncd.io) · 제조사 원문 자료입니다. 사양은 제조사 사정에 따라 변경될 수 있습니다.

we measure, we calibrate, we validate.
㈜테솔 · www.tessol.com TS-TL-NCD-366 8 / 14
KOLAS 국제공인교정기관 · ISO/IEC 17025

SENSIRION
THE SENSOR COMPANY

5.3.5 Entering and Exiting Sleep Mode

In sleep mode the sensor uses the minimum amount of current. The mode can only be entered from idle mode, i.e. when the sensor is not measuring.

This mode is particularly useful for battery operated devices. To minimize the current in this mode, the complexity of the sleep mode circuit has been reduced as much as possible, which is mainly reflected by the way the sensor exits the sleep mode.

In sleep mode the sensor cannot be soft reset.

Command	Command code (Hex)	Consecutive read	Description
Enter Sleep mode	0x3677	NA	**Triggered mode:** the sleep command can be sent after the result have been read out and the sensor is in idle mode. **Continuous mode:** the sleep command can be sent after a stop continuous measurement command has been issued and the sensor is in idle mode.
Exit Sleep mode	NA	NA	The sensor exits the sleep mode and enters the idle mode when it receives the **valid I²C address and a write bit ('0').** Note that the I²C address is **not** acknowledged. It is necessary to poll the sensor to see whether the sensor has received the address and has woken up. This should take maximum 2ms.

5.3.6 Read Product Identifier

During assembly and start-up of the machine it might be required to check some basic parameters in the sensor - for example to check if the correct sensor is integrated.
The product identifier and serial number can be read out after sending a sequence of two commands.

Command	Command code	Consecutive read	Description
Read product identifier	0x367C 0xE102	Byte1: Product number [31:24] Byte2: Product number [23:16] Byte3: CRC Byte4: Product number [15:8] Byte5: Product number [7:0] Byte6: CRC Byte7: Serial number [63:56] Byte8: Serial number [55:48] Byte9: CRC Byte10: Serial number [47:40] Byte11: Serial number [39:32] Byte12: CRC Byte13: Serial number [31:24] Byte14: Serial number [23:16] Byte15: CRC Byte16: Serial number [15:8] Byte17: Serial number [7:0] Byte18: CRC	Note that both commands need to be preceded with an I2C write header (I2C address + W). The second command returns: - 32 bit unique product and revision number. The number is listed in the table below. *Note that the last 8 bits are the revision number and can be subject to change.* - 64 bit unique serial number

Product	Product number
SDP800-500Pa	0x03020101
SDP810-500Pa	0x03020A01
SDP800-125Pa	0x03020201
SDP810-125Pa	0x03020B01

원문: SDP8XX 데이터시트 (media.ncd.io) · 제조사 원문 자료입니다. 사양은 제조사 사정에 따라 변경될 수 있습니다.

we measure, we calibrate, we validate.
㈜테솔 · www.tessol.com TS-TL-NCD-366 9 / 14
KOLAS 국제공인교정기관 · ISO/IEC 17025

SENSIRION
THE SENSOR COMPANY

5.4 Checksum Calculation

The checksum byte is generated by a CRC algorithm with the following properties:

Property	Value
Name	CRC-8
Protected data	read data
Width	8 bit
Polynomial	0x31 (x8 + x5 + x4 +1)
Initialization	0xFF
Reflect input	False
Reflect output	False
Final XOR	0x00
Example	CRC(0xBEEF) = 0x92

5.5 Conversion to Physical Values

Conversion of the differential pressure and temperature sensor signals to a physical value is done with the scale factor.

5.5.1 Scale Factors

Parameter	SDP8xx-**500Pa**	SDP8xx-**125Pa**
Differential Pressure	60 Pa^{-1}	240 Pa^{-1}
Differential Pressure (inches H_2O)	14'945 $(inH_2O)^{-1}$	59'780 $(inH_2O)^{-1}$
Temperature	200 $°C^{-1}$	200 $°C^{-1}$

5.5.2 Differential Pressure

The digital calibrated differential pressure signal read from the sensor is a signed integer number (two's complement number). The integer value can be converted to the physical value by dividing it by the scale factor.

differential pressure = sensor output ÷ scale factor

5.5.3 Temperature

The digital calibrated temperature signal read from the sensor is a signed integer number (two's complement number). The integer value can be converted to the physical value by dividing it by the scale factor.

temperature in °C = sensor output ÷ scale factor

원문: SDP8XX 데이터시트 (media.ncd.io) · 제조사 원문 자료입니다. 사양은 제조사 사정에 따라 변경될 수 있습니다.

we measure, we calibrate, we validate.
㈜테솔 · www.tessol.com TS-TL-NCD-366 10 / 14
KOLAS 국제공인교정기관 · ISO/IEC 17025

SENSIRION
THE SENSOR COMPANY

6. Package Outline

6.1 Dimensions SDP80x – Manifold Connection

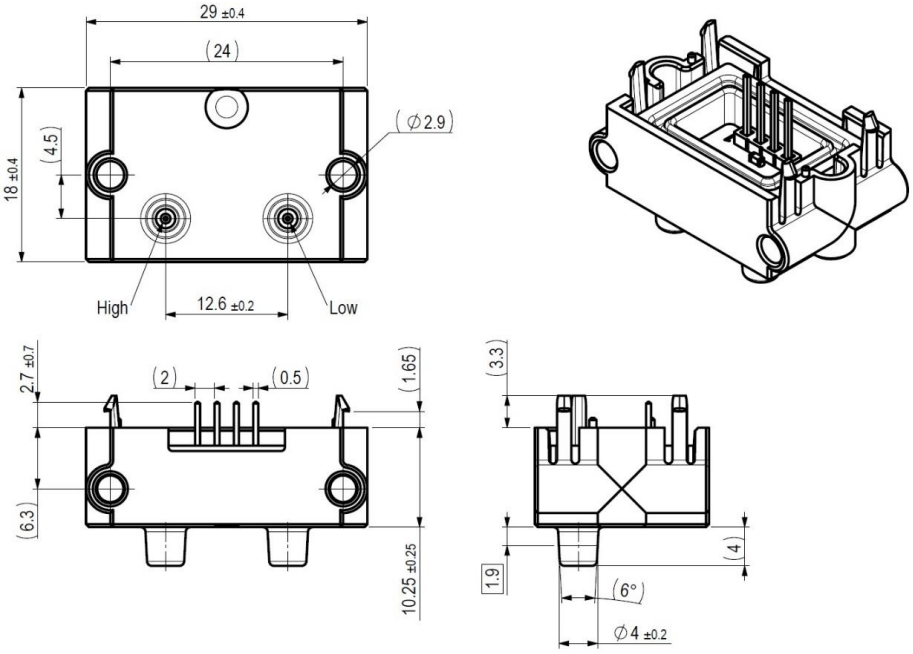

Figure 1*: SDP80x. All dimensions in mm.*

6.2 Dimensions SDP81x – Tube Connection

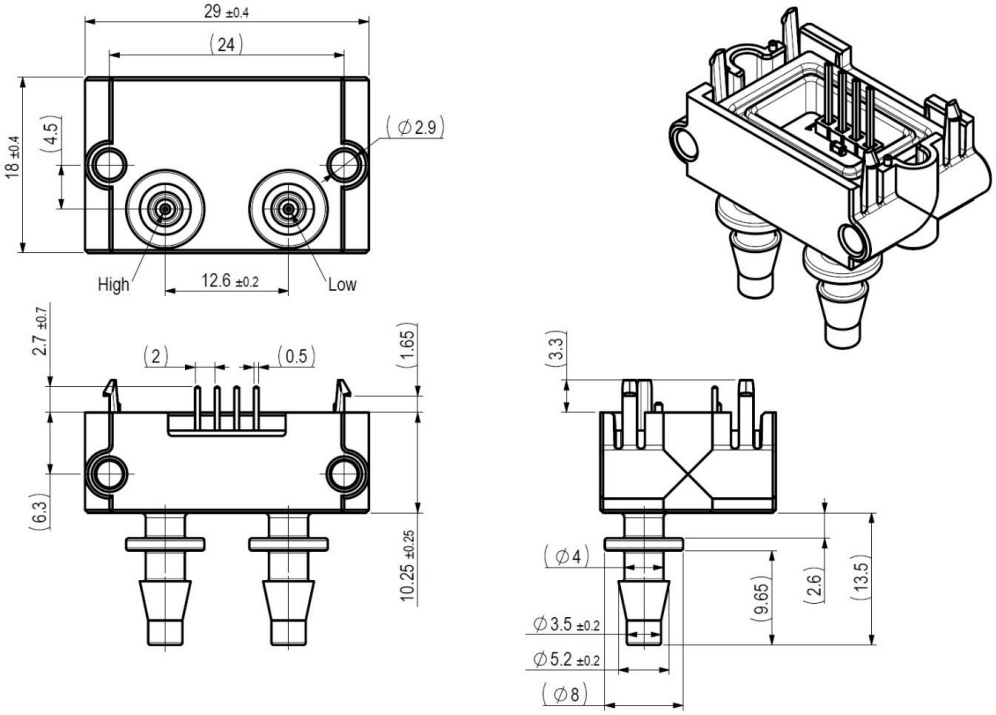

Figure 2: *SDP81x. All dimensions in mm.*

원문: SDP8XX 데이터시트 (media.ncd.io) · 제조사 원문 자료입니다. 사양은 제조사 사정에 따라 변경될 수 있습니다.

SENSIRION
THE SENSOR COMPANY

6.3 Footprint

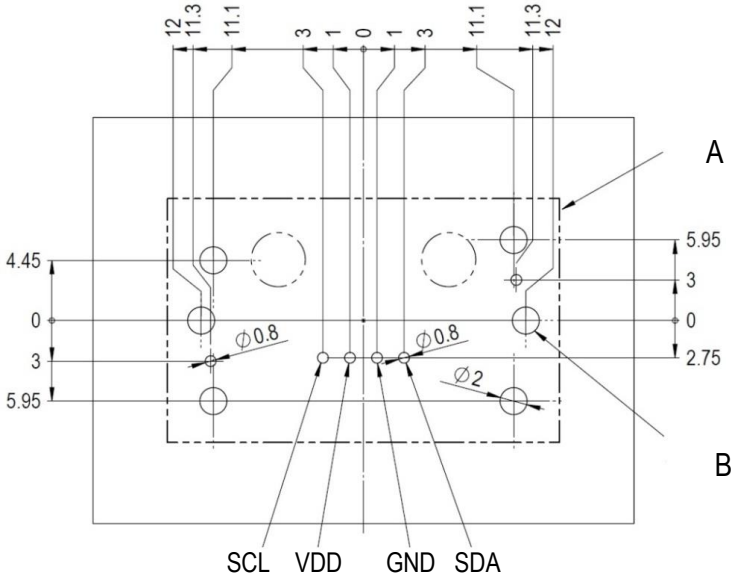

Figure 3: *Footprint for PCB mounting (top view = sensor side). All dimensions in mm.*

A: Overall sensor dimensions
B: Holes for additional mounting screws (optional)

In case the sensor is not mounted on a PCB and is connected with a cable the SDP800 series cap is recommended.

7. Soldering

Standard wave soldering systems may be used for soldering SDP800 series sensors. Reflow soldering is **not** feasible and may damage the sensor.

The sensor ports must be protected from solder splash and flux during soldering. *Figure 4* shows an appropriate temperature profile with maximum temperature values.

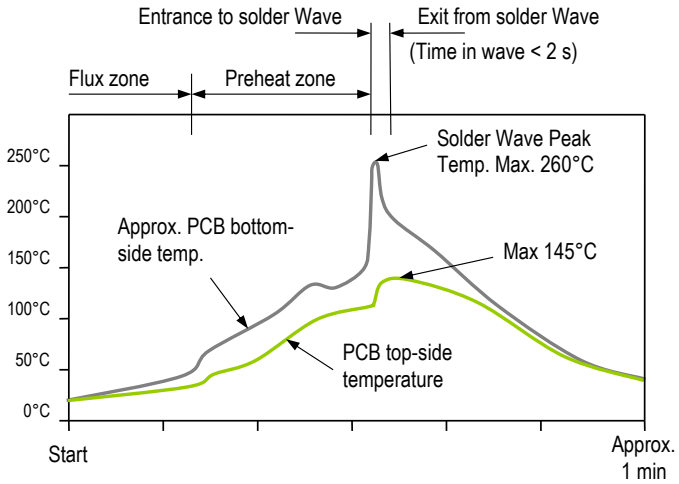

Figure 4: *Suitable wave soldering profile.*

The characteristics of wave soldering machines vary, so any soldering setup must be tested before production use.

원문: SDP8XX 데이터시트 (media.ncd.io) · 제조사 원문 자료입니다. 사양은 제조사 사정에 따라 변경될 수 있습니다.

we measure, we calibrate, we validate.
KOLAS 국제공인교정기관 · ISO/IEC 17025
㈜테솔 · www.tessol.com TS-TL-NCD-366 12 / 14

SENSIRION
THE SENSOR COMPANY

8. Shipping Package

SDP8xx are shipped in trays of 80pcs. The tray dimension is 355mm x 255mm x 21.5mm. By piling them up, the height per tray can be considered as 19mm.

9. Ordering Information

Use the part names and item numbers shown in the following table when ordering SDP800 series differential pressure sensor. For the latest product information and local distributors, visit www.sensirion.com.

Part name	Description / Output	Product number
SDP800-500Pa	Manifold mount, 500Pa, I^2C Address 0x25	1-101551-01
SDP810-500Pa	Tube connection, 500Pa, I^2C Address 0x25	1-101532-01
SDP800-125Pa	Manifold mount, 125Pa, I^2C Address 0x25	1-101599-01
SDP810-125Pa	Tube connection, 125Pa, I^2C Address 0x25	1-101597-01

Revision History

Date	Author	Version	Changes
21.03.2018	ANB	V1	Released

원문: SDP8XX 데이터시트 (media.ncd.io) · 제조사 원문 자료입니다. 사양은 제조사 사정에 따라 변경될 수 있습니다.

we measure, we calibrate, we validate.
㈜테솔 · www.tessol.com TS-TL-NCD-366 13 / 14
KOLAS 국제공인교정기관 · ISO/IEC 17025

SENSIRION
THE SENSOR COMPANY

Important Notices

Warning, personal injury

Do not use this product as safety or emergency stop devices or in any other application where failure of the product could result in personal injury (including death). Do not use this product for applications other than its intended and authorized use. Before installing, handling, using or servicing this product, please consult the datasheet and application notes. Failure to comply with these instructions could result in death or serious injury.

If the Buyer shall purchase or use SENSIRION products for any unintended or unauthorized application, Buyer shall defend, indemnify and hold harmless SENSIRION and its officers, employees, subsidiaries, affiliates and distributors against all claims, costs, damages and expenses, and reasonable attorney fees arising out of, directly or indirectly, any claim of personal injury or death associated with such unintended or unauthorized use, even if SENSIRION shall be allegedly negligent with respect to the design or the manufacture of the product.

ESD Precautions

The inherent design of this component causes it to be sensitive to electrostatic discharge (ESD). To prevent ESD-induced damage and/or degradation, take customary and statutory ESD precautions when handling this product.

See application note "Handling Instructions" for more information.

Warranty

SENSIRION warrants solely to the original purchaser of this product for a period of 12 months (one year) from the date of delivery that this product shall be of the quality, material and workmanship defined in SENSIRION's published specifications of the product. Within such period, if proven to be defective, SENSIRION shall repair and/or replace this product, in SENSIRION's discretion, free of charge to the Buyer, provided that:

- notice in writing describing the defects shall be given to SENSIRION within fourteen (14) days after their appearance;
- such defects shall be found, to SENSIRION's reasonable satisfaction, to have arisen from SENSIRION's faulty design, material, or workmanship;
- the defective product shall be returned to SENSIRION's factory at the Buyer's expense; and
- the warranty period for any repaired or replaced product shall be limited to the unexpired portion of the original period.

This warranty does not apply to any equipment which has not been installed and used within the specifications recommended by SENSIRION for the intended and proper use of the equipment. EXCEPT FOR THE WARRANTIES EXPRESSLY SET FORTH HEREIN, SENSIRION MAKES NO WARRANTIES, EITHER EXPRESS OR IMPLIED, WITH RESPECT TO THE PRODUCT. ANY AND ALL WARRANTIES, INCLUDING WITHOUT LIMITATION, WARRANTIES OF MERCHANTABILITY OR FITNESS FOR A PARTICULAR PURPOSE, ARE EXPRESSLY EXCLUDED AND DECLINED.

SENSIRION is only liable for defects of this product arising under the conditions of operation provided for in the datasheet and proper use of the goods. SENSIRION explicitly disclaims all warranties, express or implied, for any period during which the goods are operated or stored not in accordance with the technical specifications.

SENSIRION does not assume any liability arising out of any application or use of any product or circuit and specifically disclaims any and all liability, including without limitation consequential or incidental damages. All operating parameters, including without limitation recommended parameters, must be validated for each customer's applications by customer's technical experts. Recommended parameters can and do vary in different applications.

SENSIRION reserves the right, without further notice, (i) to change the product specifications and/or the information in this document and (ii) to improve reliability, functions and design of this product.

Copyright © 2016-2018, SENSIRION.
CMOSens® is a trademark of Sensirion
All rights reserved

Headquarters and Subsidiaries

Sensirion AG
Laubisruetistr. 50
CH-8712 Staefa ZH
Switzerland

phone: +41 44 306 40 00
fax: +41 44 306 40 30
info@sensirion.com
www.sensirion.com

Sensirion Taiwan Co. Ltd
phone: +886 3 5506701
info@sensirion.com
www.sensirion.com

Sensirion Inc., USA
phone: +1 312 690 5858
info-us@sensirion.com
www.sensirion.com

Sensirion Japan Co. Ltd.
phone: +81 3 3444 4940
info-jp@sensirion.com
www.sensirion.co.jp

Sensirion Korea Co. Ltd.
phone: +82 31 337 7700~3
info-kr@sensirion.com
www.sensirion.co.kr

Sensirion China Co. Ltd.
phone: +86 755 8252 1501
info-cn@sensirion.com
www.sensirion.com.cn

To find your local representative, please visit www.sensirion.com/distributors

원문: SDP8XX 데이터시트 (media.ncd.io) · 제조사 원문 자료입니다. 사양은 제조사 사정에 따라 변경될 수 있습니다.