PCA9685

16-channel, 12-bit PWM Fm+ I²C-bus LED controller

Rev. 4 — 16 April 2015 Product data sheet

1. General description

The PCA9685 is an I²C-bus controlled 16-channel LED controller optimized for Red/Green/Blue/Amber (RGBA) color backlighting applications. Each LED output has its own 12-bit resolution (4096 steps) fixed frequency individual PWM controller that operates at a programmable frequency from a typical of 24 Hz to 1526 Hz with a duty cycle that is adjustable from 0 % to 100 % to allow the LED to be set to a specific brightness value. All outputs are set to the same PWM frequency.

Each LED output can be off or on (no PWM control), or set at its individual PWM controller value. The LED output driver is programmed to be either open-drain with a 25 mA current sink capability at 5 V or totem pole with a 25 mA sink, 10 mA source capability at 5 V. The PCA9685 operates with a supply voltage range of 2.3 V to 5.5 V and the inputs and outputs are 5.5 V tolerant. LEDs can be directly connected to the LED output (up to 25 mA, 5.5 V) or controlled with external drivers and a minimum amount of discrete components for larger current or higher voltage LEDs.

The PCA9685 is in the new Fast-mode Plus (Fm+) family. Fm+ devices offer higher frequency (up to 1 MHz) and more densely populated bus operation (up to 4000 pF).

Although the PCA9635 and PCA9685 have many similar features, the PCA9685 has some unique features that make it more suitable for applications such as LCD or LED backlighting and Ambilight:

- The PCA9685 allows staggered LED output on and off times to minimize current surges. The on and off time delay is independently programmable for each of the 16 channels. This feature is not available in PCA9635.
- The PCA9685 has 4096 steps (12-bit PWM) of individual LED brightness control. The PCA9635 has only 256 steps (8-bit PWM).
- When multiple LED controllers are incorporated in a system, the PWM pulse widths between multiple devices may differ if PCA9635s are used. The PCA9685 has a programmable prescaler to adjust the PWM pulse widths of multiple devices.
- The PCA9685 has an external clock input pin that will accept user-supplied clock (50 MHz max.) in place of the internal 25 MHz oscillator. This feature allows synchronization of multiple devices. The PCA9635 does not have external clock input feature.
- Like the PCA9635, PCA9685 also has a built-in oscillator for the PWM control. However, the frequency used for PWM control in the PCA9685 is adjustable from about 24 Hz to 1526 Hz as compared to the typical 97.6 kHz frequency of the PCA9635. This allows the use of PCA9685 with external power supply controllers. All bits are set at the same frequency.
- The Power-On Reset (POR) default state of LEDn output pins is LOW in the case of PCA9685. It is HIGH for PCA9635.

원문: PCA9685.pdf (media.ncd.io) · 제조사 원문 자료입니다. 사양은 제조사 사정에 따라 변경될 수 있습니다.

The active LOW Output Enable input pin ($\overline{OE}$) allows asynchronous control of the LED outputs and can be used to set all the outputs to a defined I²C-bus programmable logic state. The $\overline{OE}$ can also be used to externally 'pulse width modulate' the outputs, which is useful when multiple devices need to be dimmed or blinked together using software control.

Software programmable LED All Call and three Sub Call I²C-bus addresses allow all or defined groups of PCA9685 devices to respond to a common I²C-bus address, allowing for example, all red LEDs to be turned on or off at the same time or marquee chasing effect, thus minimizing I²C-bus commands. Six hardware address pins allow up to 62 devices on the same bus.

The Software Reset (SWRST) General Call allows the master to perform a reset of the PCA9685 through the I²C-bus, identical to the Power-On Reset (POR) that initializes the registers to their default state causing the outputs to be set LOW. This allows an easy and quick way to reconfigure all device registers to the same condition via software.

2. Features and benefits

- 16 LED drivers. Each output programmable at:
  - Off
  - On
  - Programmable LED brightness
  - Programmable LED turn-on time to help reduce EMI
- 1 MHz Fast-mode Plus compatible I²C-bus interface with 30 mA high drive capability on SDA output for driving high capacitive buses
- 4096-step (12-bit) linear programmable brightness per LED output varying from fully off (default) to maximum brightness
- LED output frequency (all LEDs) typically varies from 24 Hz to 1526 Hz (Default of 1Eh in PRE_SCALE register results in a 200 Hz refresh rate with oscillator clock of 25 MHz.)
- Sixteen totem pole outputs (sink 25 mA and source 10 mA at 5 V) with software programmable open-drain LED outputs selection (default at totem pole). No input function.
- Output state change programmable on the Acknowledge or the STOP Command to update outputs byte-by-byte or all at the same time (default to 'Change on STOP').
- Active LOW Output Enable ($\overline{OE}$) input pin. LEDn outputs programmable to logic 1, logic 0 (default at power-up) or 'high-impedance' when $\overline{OE}$ is HIGH.
- 6 hardware address pins allow 62 PCA9685 devices to be connected to the same I²C-bus
- Toggling $\overline{OE}$ allows for hardware LED blinking
- 4 software programmable I²C-bus addresses (one LED All Call address and three LED Sub Call addresses) allow groups of devices to be addressed at the same time in any combination (for example, one register used for 'All Call' so that all the PCA9685s on the I²C-bus can be addressed at the same time and the second register used for three different addresses so that ⅓ of all devices on the bus can be addressed at the same time in a group). Software enable and disable for these I²C-bus address.
- Software Reset feature (SWRST General Call) allows the device to be reset through the I²C-bus

 © NXP Semiconductors N.V. 2015. All rights reserved.

원문: PCA9685.pdf (media.ncd.io) · 제조사 원문 자료입니다. 사양은 제조사 사정에 따라 변경될 수 있습니다.

- 25 MHz typical internal oscillator requires no external components
- External 50 MHz (max.) clock input
- Internal power-on reset
- Noise filter on SDA/SCL inputs
- Edge rate control on outputs
- No output glitches on power-up
- Supports hot insertion
- Low standby current
- Operating power supply voltage range of 2.3 V to 5.5 V
- 5.5 V tolerant inputs
- –40 °C to +85 °C operation
- ESD protection exceeds 2000 V HBM per JESD22-A114, 200 V MM per JESD22-A115 and 1000 V CDM per JESD22-C101
- Latch-up testing is done to JEDEC Standard JESD78 which exceeds 100 mA
- Packages offered: TSSOP28, HVQFN28

3. Applications

- RGB or RGBA LED drivers
- LED status information
- LED displays
- LCD backlights
- Keypad backlights for cellular phones or handheld devices

 © NXP Semiconductors N.V. 2015. All rights reserved.

원문: PCA9685.pdf (media.ncd.io) · 제조사 원문 자료입니다. 사양은 제조사 사정에 따라 변경될 수 있습니다.

4. Ordering information

Table 1. Ordering information

Type number	Topside mark	Package		
		Name	Description	Version
PCA9685PW	PCA9685PW	TSSOP28	plastic thin shrink small outline package; 28 leads; body width 4.4 mm	SOT361-1
PCA9685PW/Q900[1]	PCA9685PW	TSSOP28	plastic thin shrink small outline package; 28 leads; body width 4.4 mm	SOT361-1
PCA9685BS	P9685	HVQFN28	plastic thermal enhanced very thin quad flat package; no leads; 28 terminals; body 6 × 6 × 0.85 mm	SOT788-1

[1] PCA9685PW/Q900 is AEC-Q100 compliant. Contact **i2c.support@nxp.com** for PPAP.

4.1 Ordering options

Table 2. Ordering options

Type number	Orderable part number	Package	Packing method	Minimum order quantity	Temperature
PCA9685PW	PCA9685PW,118	TSSOP28	REEL 13" Q1/T1 *STANDARD MARK SMD	2500	T_{amb} = −40 °C to +85 °C
PCA9685PW/Q900	PCA9685PW/Q900,118	TSSOP28	REEL 13" Q1/T1 *STANDARD MARK SMD	2500	T_{amb} = −40 °C to +85 °C
PCA9685BS	PCA9685BS,118	HVQFN28	REEL 13" Q1/T1 *STANDARD MARK SMD	4000	T_{amb} = −40 °C to +85 °C

 © NXP Semiconductors N.V. 2015. All rights reserved.

원문: PCA9685.pdf (media.ncd.io) · 제조사 원문 자료입니다. 사양은 제조사 사정에 따라 변경될 수 있습니다.

5. Block diagram

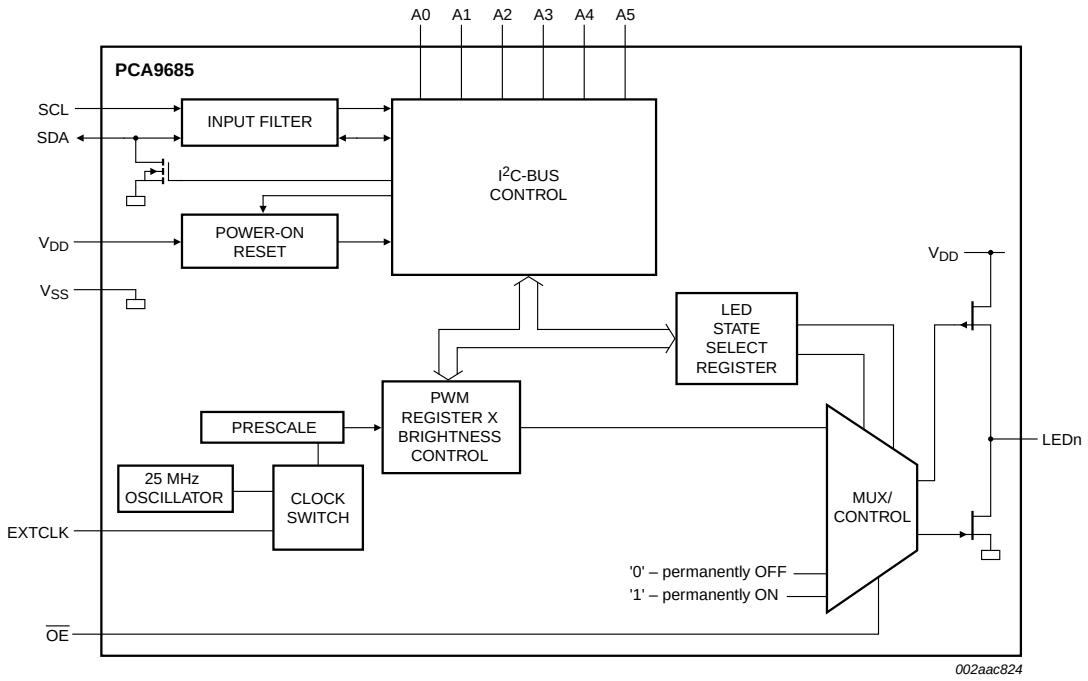

Remark: Only one LED output shown for clarity.

Fig 1. Block diagram of PCA9685

원문: PCA9685.pdf (media.ncd.io) · 제조사 원문 자료입니다. 사양은 제조사 사정에 따라 변경될 수 있습니다.

6. Pinning information

6.1 Pinning

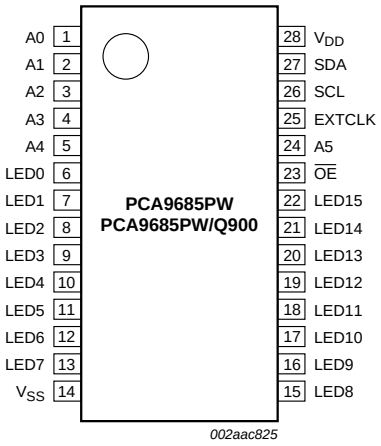

Fig 2. Pin configuration for TSSOP28

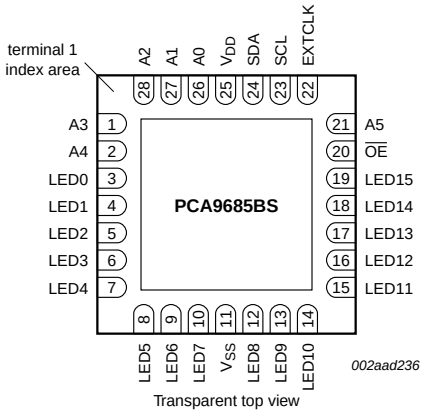

Fig 3. Pin configuration for HVQFN28

6.2 Pin description

Table 3. Pin description

Symbol	Pin		Type	Description
	TSSOP28	HVQFN28		
A0	1	26	I	address input 0
A1	2	27	I	address input 1
A2	3	28	I	address input 2
A3	4	1	I	address input 3
A4	5	2	I	address input 4
LED0	6	3	O	LED driver 0
LED1	7	4	O	LED driver 1
LED2	8	5	O	LED driver 2
LED3	9	6	O	LED driver 3
LED4	10	7	O	LED driver 4
LED5	11	8	O	LED driver 5
LED6	12	9	O	LED driver 6
LED7	13	10	O	LED driver 7
V_{SS}	14	11[1]	power supply	supply ground
LED8	15	12	O	LED driver 8
LED9	16	13	O	LED driver 9
LED10	17	14	O	LED driver 10
LED11	18	15	O	LED driver 11

 © NXP Semiconductors N.V. 2015. All rights reserved.

원문: PCA9685.pdf (media.ncd.io) · 제조사 원문 자료입니다. 사양은 제조사 사정에 따라 변경될 수 있습니다.

Table 3. Pin description *...continued*

Symbol	Pin		Type	Description
	TSSOP28	HVQFN28		
LED12	19	16	O	LED driver 12
LED13	20	17	O	LED driver 13
LED14	21	18	O	LED driver 14
LED15	22	19	O	LED driver 15
$\overline{OE}$	23	20	I	active LOW output enable
A5	24	21	I	address input 5
EXTCLK	25	22	I	external clock input[2]
SCL	26	23	I	serial clock line
SDA	27	24	I/O	serial data line
V_{DD}	28	25	power supply	supply voltage

[1] HVQFN28 package die supply ground is connected to both V_{SS} pin and exposed center pad. V_{SS} pin must be connected to supply ground for proper device operation. For enhanced thermal, electrical, and board level performance, the exposed pad needs to be soldered to the board using a corresponding thermal pad on the board and for proper heat conduction through the board, thermal vias need to be incorporated in the PCB in the thermal pad region.

[2] This pin must be grounded when this feature is not used.

7. Functional description

Refer to Figure 1 “Block diagram of PCA9685”.

7.1 Device addresses

Following a START condition, the bus master must output the address of the slave it is accessing.

There are a maximum of 64 possible programmable addresses using the 6 hardware address pins. Two of these addresses, Software Reset and LED All Call, cannot be used because their default power-up state is ON, leaving a maximum of 62 addresses. Using other reserved addresses, as well as any other subcall address, will reduce the total number of possible addresses even further.

7.1.1 Regular I²C-bus slave address

The I²C-bus slave address of the PCA9685 is shown in Figure 4. To conserve power, no internal pull-up resistors are incorporated on the hardware selectable address pins and they must be pulled HIGH or LOW.

Remark: Using reserved I²C-bus addresses will interfere with other devices, but only if the devices are on the bus and/or the bus will be open to other I²C-bus systems at some later date. In a closed system where the designer controls the address assignment these addresses can be used since the PCA9685 treats them like any other address. The LED All Call, Software Reset and PCA9564 or PCA9665 slave address (if on the bus) can never be used for individual device addresses.

- PCA9685 LED All Call address (1110 000) and Software Reset (0000 0110) which are active on start-up

 © NXP Semiconductors N.V. 2015. All rights reserved.

원문: PCA9685.pdf (media.ncd.io) · 제조사 원문 자료입니다. 사양은 제조사 사정에 따라 변경될 수 있습니다.

- PCA9564 (0000 000) or PCA9665 (1110 000) slave address which is active on start-up
- 'reserved for future use' I²C-bus addresses (0000 011, 1111 1XX)
- slave devices that use the 10-bit addressing scheme (1111 0XX)
- slave devices that are designed to respond to the General Call address (0000 000) which is used as the software reset address
- High-speed mode (Hs-mode) master code (0000 1XX)

Fig 4. Slave address

The last bit of the address byte defines the operation to be performed. When set to logic 1 a read is selected, while a logic 0 selects a write operation.

7.1.2 LED All Call I²C-bus address

- Default power-up value (ALLCALLADR register): E0h or 1110 000X
- Programmable through I²C-bus (volatile programming)
- At power-up, LED All Call I²C-bus address is enabled. PCA9685 sends an ACK when E0h (R/$\overline{W}$ = 0) or E1h (R/$\overline{W}$ = 1) is sent by the master.

See Section 7.3.7 "ALLCALLADR, LED All Call I²C-bus address" for more detail.

Remark: The default LED All Call I²C-bus address (E0h or 1110 000X) must not be used as a regular I²C-bus slave address since this address is enabled at power-up. All the PCA9685s on the I²C-bus will acknowledge the address if sent by the I²C-bus master.

7.1.3 LED Sub Call I²C-bus addresses

- 3 different I²C-bus addresses can be used
- Default power-up values:
  - SUBADR1 register: E2h or 1110 001X
  - SUBADR2 register: E4h or 1110 010X
  - SUBADR3 register: E8h or 1110 100X
- Programmable through I²C-bus (volatile programming)
- At power-up, Sub Call I²C-bus addresses are disabled. PCA9685 does not send an ACK when E2h (R/$\overline{W}$ = 0) or E3h (R/$\overline{W}$ = 1), E4h (R/$\overline{W}$ = 0) or E5h (R/$\overline{W}$ = 1), or E8h (R/$\overline{W}$ = 0) or E9h (R/$\overline{W}$ = 1) is sent by the master.

See Section 7.3.6 "SUBADR1 to SUBADR3, I²C-bus subaddress 1 to 3" for more detail.

Remark: The default LED Sub Call I²C-bus addresses may be used as regular I²C-bus slave addresses as long as they are disabled.

 © NXP Semiconductors N.V. 2015. All rights reserved.

원문: PCA9685.pdf (media.ncd.io) · 제조사 원문 자료입니다. 사양은 제조사 사정에 따라 변경될 수 있습니다.

TESSOL Technical Library

TS-TL-NCD-401

we measure, we calibrate, we validate.
㈜테솔 · www.tessol.com TS-TL-NCD-401 8 / 52
KOLAS 국제공인교정기관 · ISO/IEC 17025

7.1.4 Software Reset I²C-bus address

The address shown in Figure 5 is used when a reset of the PCA9685 needs to be performed by the master. The Software Reset address (SWRST Call) must be used with R/$\overline{W}$ = logic 0. If R/$\overline{W}$ = logic 1, the PCA9685 does not acknowledge the SWRST. See Section 7.6 “Software reset” for more detail.

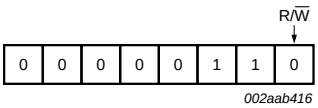

Fig 5. Software Reset address

Remark: The Software Reset I²C-bus address is a reserved address and cannot be used as a regular I²C-bus slave address or as an LED All Call or LED Sub Call address.

7.2 Control register

Following the successful acknowledgement of the slave address, LED All Call address or LED Sub Call address, the bus master will send a byte to the PCA9685, which will be stored in the Control register.

This register is used as a pointer to determine which register will be accessed.

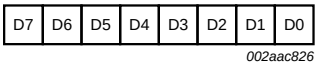

reset state = 00h

Remark: The Control register does not apply to the Software Reset I²C-bus address.

Fig 6. Control register

© NXP Semiconductors N.V. 2015. All rights reserved.

원문: PCA9685.pdf (media.ncd.io) · 제조사 원문 자료입니다. 사양은 제조사 사정에 따라 변경될 수 있습니다.

we measure, we calibrate, we validate. ㈜테솔 · www.tessol.com TS-TL-NCD-401 9 / 52
KOLAS 국제공인교정기관 · ISO/IEC 17025

TESSOL Technical Library TS-TL-NCD-401

7.3 Register definitions

Table 4. Register summary

Register # (decimal)	Register # (hex)	D7	D6	D5	D4	D3	D2	D1	D0	Name	Type	Function
0	00	0	0	0	0	0	0	0	0	MODE1	read/write	Mode register 1
1	01	0	0	0	0	0	0	0	1	MODE2	read/write	Mode register 2
2	02	0	0	0	0	0	0	1	0	SUBADR1	read/write	I²C-bus subaddress 1
3	03	0	0	0	0	0	0	1	1	SUBADR2	read/write	I²C-bus subaddress 2
4	04	0	0	0	0	0	1	0	0	SUBADR3	read/write	I²C-bus subaddress 3
5	05	0	0	0	0	0	1	0	1	ALLCALLADR	read/write	LED All Call I²C-bus address
6	06	0	0	0	0	0	1	1	0	LED0_ON_L	read/write	LED0 output and brightness control byte 0
7	07	0	0	0	0	0	1	1	1	LED0_ON_H	read/write	LED0 output and brightness control byte 1
8	08	0	0	0	0	1	0	0	0	LED0_OFF_L	read/write	LED0 output and brightness control byte 2
9	09	0	0	0	0	1	0	0	1	LED0_OFF_H	read/write	LED0 output and brightness control byte 3
10	0A	0	0	0	0	1	0	1	0	LED1_ON_L	read/write	LED1 output and brightness control byte 0
11	0B	0	0	0	0	1	0	1	1	LED1_ON_H	read/write	LED1 output and brightness control byte 1
12	0C	0	0	0	0	1	1	0	0	LED1_OFF_L	read/write	LED1 output and brightness control byte 2
13	0D	0	0	0	0	1	1	0	1	LED1_OFF_H	read/write	LED1 output and brightness control byte 3
14	0E	0	0	0	0	1	1	1	0	LED2_ON_L	read/write	LED2 output and brightness control byte 0
15	0F	0	0	0	0	1	1	1	1	LED2_ON_H	read/write	LED2 output and brightness control byte 1
16	10	0	0	0	1	0	0	0	0	LED2_OFF_L	read/write	LED2 output and brightness control byte 2
17	11	0	0	0	1	0	0	0	1	LED2_OFF_H	read/write	LED2 output and brightness control byte 3
18	12	0	0	0	1	0	0	1	0	LED3_ON_L	read/write	LED3 output and brightness control byte 0
19	13	0	0	0	1	0	0	1	1	LED3_ON_H	read/write	LED3 output and brightness control byte 1
20	14	0	0	0	1	0	1	0	0	LED3_OFF_L	read/write	LED3 output and brightness control byte 2
21	15	0	0	0	1	0	1	0	1	LED3_OFF_H	read/write	LED3 output and brightness control byte 3

© NXP Semiconductors N.V. 2015. All rights reserved.

원문: PCA9685.pdf (media.ncd.io) · 제조사 원문 자료입니다. 사양은 제조사 사정에 따라 변경될 수 있습니다.

Table 4. Register summary *...continued*

Register# (decimal)	Register# (hex)	D7	D6	D5	D4	D3	D2	D1	D0	Name	Type	Function
22	16	0	0	0	1	0	1	1	0	LED4_ON_L	read/write	LED4 output and brightness control byte 0
23	17	0	0	0	1	0	1	1	1	LED4_ON_H	read/write	LED4 output and brightness control byte 1
24	18	0	0	0	1	1	0	0	0	LED4_OFF_L	read/write	LED4 output and brightness control byte 2
25	19	0	0	0	1	1	0	0	1	LED4_OFF_H	read/write	LED4 output and brightness control byte 3
26	1A	0	0	0	1	1	0	1	0	LED5_ON_L	read/write	LED5 output and brightness control byte 0
27	1B	0	0	0	1	1	0	1	1	LED5_ON_H	read/write	LED5 output and brightness control byte 1
28	1C	0	0	0	1	1	1	0	0	LED5_OFF_L	read/write	LED5 output and brightness control byte 2
29	1D	0	0	0	1	1	1	0	1	LED5_OFF_H	read/write	LED5 output and brightness control byte 3
30	1E	0	0	0	1	1	1	1	0	LED6_ON_L	read/write	LED6 output and brightness control byte 0
31	1F	0	0	0	1	1	1	1	1	LED6_ON_H	read/write	LED6 output and brightness control byte 1
32	20	0	0	1	0	0	0	0	0	LED6_OFF_L	read/write	LED6 output and brightness control byte 2
33	21	0	0	1	0	0	0	0	1	LED6_OFF_H	read/write	LED6 output and brightness control byte 3
34	22	0	0	1	0	0	0	1	0	LED7_ON_L	read/write	LED7 output and brightness control byte 0
35	23	0	0	1	0	0	0	1	1	LED7_ON_H	read/write	LED7 output and brightness control byte 1
36	24	0	0	1	0	0	1	0	0	LED7_OFF_L	read/write	LED7 output and brightness control byte 2
37	25	0	0	1	0	0	1	0	1	LED7_OFF_H	read/write	LED7 output and brightness control byte 3
38	26	0	0	1	0	0	1	1	0	LED8_ON_L	read/write	LED8 output and brightness control byte 0
39	27	0	0	1	0	0	1	1	1	LED8_ON_H	read/write	LED8 output and brightness control byte 1
40	28	0	0	1	0	1	0	0	0	LED8_OFF_L	read/write	LED8 output and brightness control byte 2
41	29	0	0	1	0	1	0	0	1	LED8_OFF_H	read/write	LED8 output and brightness control byte 3

 © NXP Semiconductors N.V. 2015. All rights reserved.

원문: PCA9685.pdf (media.ncd.io) · 제조사 원문 자료입니다. 사양은 제조사 사정에 따라 변경될 수 있습니다.

Table 4. Register summary *...continued*

Register# (decimal)	Register# (hex)	D7	D6	D5	D4	D3	D2	D1	D0	Name	Type	Function
42	2A	0	0	1	0	1	0	1	0	LED9_ON_L	read/write	LED9 output and brightness control byte 0
43	2B	0	0	1	0	1	0	1	1	LED9_ON_H	read/write	LED9 output and brightness control byte 1
44	2C	0	0	1	0	1	1	0	0	LED9_OFF_L	read/write	LED9 output and brightness control byte 2
45	2D	0	0	1	0	1	1	0	1	LED9_OFF_H	read/write	LED9 output and brightness control byte 3
46	2E	0	0	1	0	1	1	1	0	LED10_ON_L	read/write	LED10 output and brightness control byte 0
47	2F	0	0	1	0	1	1	1	1	LED10_ON_H	read/write	LED10 output and brightness control byte 1
48	30	0	0	1	1	0	0	0	0	LED10_OFF_L	read/write	LED10 output and brightness control byte 2
49	31	0	0	1	1	0	0	0	1	LED10_OFF_H	read/write	LED10 output and brightness control byte 3
50	32	0	0	1	1	0	0	1	0	LED11_ON_L	read/write	LED11 output and brightness control byte 0
51	33	0	0	1	1	0	0	1	1	LED11_ON_H	read/write	LED11 output and brightness control byte 1
52	34	0	0	1	1	0	1	0	0	LED11_OFF_L	read/write	LED11 output and brightness control byte 2
53	35	0	0	1	1	0	1	0	1	LED11_OFF_H	read/write	LED11 output and brightness control byte 3
54	36	0	0	1	1	0	1	1	0	LED12_ON_L	read/write	LED12 output and brightness control byte 0
55	37	0	0	1	1	0	1	1	1	LED12_ON_H	read/write	LED12 output and brightness control byte 1
56	38	0	0	1	1	1	0	0	0	LED12_OFF_L	read/write	LED12 output and brightness control byte 2
57	39	0	0	1	1	1	0	0	1	LED12_OFF_H	read/write	LED12 output and brightness control byte 3
58	3A	0	0	1	1	1	0	1	0	LED13_ON_L	read/write	LED13 output and brightness control byte 0
59	3B	0	0	1	1	1	0	1	1	LED13_ON_H	read/write	LED13 output and brightness control byte 1
60	3C	0	0	1	1	1	1	0	0	LED13_OFF_L	read/write	LED13 output and brightness control byte 2
61	3D	0	0	1	1	1	1	0	1	LED13_OFF_H	read/write	LED13 output and brightness control byte 3

 © NXP Semiconductors N.V. 2015. All rights reserved.

원문: PCA9685.pdf (media.ncd.io) · 제조사 원문 자료입니다. 사양은 제조사 사정에 따라 변경될 수 있습니다.

Table 4. Register summary *...continued*

Register # (decimal)	Register # (hex)	D7	D6	D5	D4	D3	D2	D1	D0	Name	Type	Function
62	3E	0	0	1	1	1	1	1	0	LED14_ON_L	read/write	LED14 output and brightness control byte 0
63	3F	0	0	1	1	1	1	1	1	LED14_ON_H	read/write	LED14 output and brightness control byte 1
64	40	0	1	0	0	0	0	0	0	LED14_OFF_L	read/write	LED14 output and brightness control byte 2
65	41	0	1	0	0	0	0	0	1	LED14_OFF_H	read/write	LED14 output and brightness control byte 3
66	42	0	1	0	0	0	0	1	0	LED15_ON_L	read/write	LED15 output and brightness control byte 0
67	43	0	1	0	0	0	0	1	1	LED15_ON_H	read/write	LED15 output and brightness control byte 1
68	44	0	1	0	0	0	1	0	0	LED15_OFF_L	read/write	LED15 output and brightness control byte 2
69	45	0	1	0	0	0	1	0	1	LED15_OFF_H	read/write	LED15 output and brightness control byte 3
...	reserved for future use											
250	FA	1	1	1	1	1	0	1	0	ALL_LED_ON_L	write/read zero	load all the LEDn_ON registers, byte 0
251	FB	1	1	1	1	1	0	1	1	ALL_LED_ON_H	write/read zero	load all the LEDn_ON registers, byte 1
252	FC	1	1	1	1	1	1	0	0	ALL_LED_OFF_L	write/read zero	load all the LEDn_OFF registers, byte 0
253	FD	1	1	1	1	1	1	0	1	ALL_LED_OFF_H	write/read zero	load all the LEDn_OFF registers, byte 1
254	FE	1	1	1	1	1	1	1	0	PRE_SCALE[1]	read/write	prescaler for PWM output frequency
255	FF	1	1	1	1	1	1	1	1	TestMode[2]	read/write	defines the test mode to be entered
...	All further addresses are reserved for future use; reserved addresses will not be acknowledged.											

[1] Writes to PRE_SCALE register are blocked when SLEEP bit is logic 0 (MODE 1).

[2] Reserved. Writes to this register may cause unpredictable results.

Remark: Auto Increment past register 69 will point to MODE1 register (register 0).
Auto Increment also works from register 250 to register 254, then rolls over to register 0.

 © NXP Semiconductors N.V. 2015. All rights reserved.

원문: PCA9685.pdf (media.ncd.io) · 제조사 원문 자료입니다. 사양은 제조사 사정에 따라 변경될 수 있습니다.

7.3.1 Mode register 1, MODE1

Table 5. MODE1 - Mode register 1 (address 00h) bit description

*Legend: * default value.*

Bit	Symbol	Access	Value	Description
7	RESTART	R		Shows state of RESTART logic. See Section 7.3.1.1 for detail.
		W		User writes logic 1 to this bit to clear it to logic 0. A user write of logic 0 will have no effect. See Section 7.3.1.1 for detail.
			0*	Restart disabled.
			1	Restart enabled.
6	EXTCLK	R/W		To use the EXTCLK pin, this bit must be set by the following sequence: 1. Set the SLEEP bit in MODE1. This turns off the internal oscillator. 2. Write logic 1s to both the SLEEP and EXTCLK bits in MODE1. The switch is now made. The external clock can be active during the switch because the SLEEP bit is set. This bit is a 'sticky bit', that is, it cannot be cleared by writing a logic 0 to it. The EXTCLK bit can **only** be cleared by a power cycle or software reset. EXTCLK range is DC to 50 MHz. $refresh_rate = \frac{EXTCLK}{4096 \times (prescale + 1)}$
			0*	Use internal clock.
			1	Use EXTCLK pin clock.
5	AI	R/W	0*	Register Auto-Increment disabled[1].
			1	Register Auto-Increment enabled.
4	SLEEP	R/W	0	Normal mode[2].
			1*	Low power mode. Oscillator off[3][4].
3	SUB1	R/W	0*	PCA9685 does not respond to I²C-bus subaddress 1.
			1	PCA9685 responds to I²C-bus subaddress 1.
2	SUB2	R/W	0*	PCA9685 does not respond to I²C-bus subaddress 2.
			1	PCA9685 responds to I²C-bus subaddress 2.
1	SUB3	R/W	0*	PCA9685 does not respond to I²C-bus subaddress 3.
			1	PCA9685 responds to I²C-bus subaddress 3.
0	ALLCALL	R/W	0	PCA9685 does not respond to LED All Call I²C-bus address.
			1*	PCA9685 responds to LED All Call I²C-bus address.

[1] When the Auto Increment flag is set, AI = 1, the Control register is automatically incremented after a read or write. This allows the user to program the registers sequentially.

[2] It takes 500 μs max. for the oscillator to be up and running once SLEEP bit has been set to logic 0. Timings on LEDn outputs are not guaranteed if PWM control registers are accessed within the 500 μs window. There is no start-up delay required when using the EXTCLK pin as the PWM clock.

[3] No PWM control is possible when the oscillator is off.

[4] When the oscillator is off (Sleep mode) the LEDn outputs cannot be turned on, off or dimmed/blinked.

 © NXP Semiconductors N.V. 2015. All rights reserved.

원문: PCA9685.pdf (media.ncd.io) · 제조사 원문 자료입니다. 사양은 제조사 사정에 따라 변경될 수 있습니다.

we measure, we calibrate, we validate. ㈜테솔 · www.tessol.com TS-TL-NCD-401 14 / 52

KOLAS 국제공인교정기관 · ISO/IEC 17025

TESSOL Technical Library TS-TL-NCD-401

7.3.1.1 Restart mode

If the PCA9685 is operating and the user decides to put the chip to sleep (setting MODE1 bit 4) without stopping any of the PWM channels, the RESTART bit (MODE1 bit 7) will be set to logic 1 at the end of the PWM refresh cycle. The contents of each PWM register are held valid when the clock is off.

To restart all of the previously active PWM channels with a few I²C-bus cycles do the following steps:

1. Read MODE1 register.
2. Check that bit 7 (RESTART) is a logic 1. If it is, clear bit 4 (SLEEP). Allow time for oscillator to stabilize (500 μs).
3. Write logic 1 to bit 7 of MODE1 register. All PWM channels will restart and the RESTART bit will clear.

Remark: The SLEEP bit **must** be logic 0 for at least 500 μs, before a logic 1 is written into the RESTART bit.

Other actions that will clear the RESTART bit are:

1. Power cycle.
2. I²C Software Reset command.
3. If the MODE2 OCH bit is logic 0, write to any PWM register then issue an I²C-bus STOP.
4. If the MODE2 OCH bit is logic 1, write to all four PWM registers in any PWM channel.

Likewise, if the user does an orderly shutdown[1] of all the PWM channels before setting the SLEEP bit, the RESTART bit will be cleared. If this is done the contents of all PWM registers are invalidated and must be reloaded before reuse.

An example of the use of the RESTART bit would be the restoring of a customer's laptop LCD backlight intensity coming out of Standby to the level it was before going into Standby.

1. Two methods can be used to do an orderly shutdown. The fastest is to write a logic 1 to bit 4 in register ALL_LED_OFF_H. The other method is to write logic 1 to bit 4 in each active PWM channel LEDn_OFF_H register.

All information provided in this document is subject to legal disclaimers. © NXP Semiconductors N.V. 2015. All rights reserved.

원문: PCA9685.pdf (media.ncd.io) · 제조사 원문 자료입니다. 사양은 제조사 사정에 따라 변경될 수 있습니다.

we measure, we calibrate, we validate. ㈜테솔 · www.tessol.com TS-TL-NCD-401 15 / 52
KOLAS 국제공인교정기관 · ISO/IEC 17025

TESSOL Technical Library TS-TL-NCD-401

7.3.2 Mode register 2, MODE2

Table 6. MODE2 - Mode register 2 (address 01h) bit description

*Legend: * default value.*

Bit	Symbol	Access	Value	Description
7 to 5	-	read only	000*	reserved
4	INVRT[1]	R/W	0*	Output logic state not inverted. Value to use when external driver used. Applicable when $\overline{OE}$ = 0.
			1	Output logic state inverted. Value to use when no external driver used. Applicable when $\overline{OE}$ = 0.
3	OCH	R/W	0*	Outputs change on STOP command[2].
			1	Outputs change on ACK[3].
2	OUTDRV[1]	R/W	0	The 16 LEDn outputs are configured with an open-drain structure.
			1*	The 16 LEDn outputs are configured with a totem pole structure.
1 to 0	OUTNE[1:0][4]	R/W	00*	When $\overline{OE}$ = 1 (output drivers not enabled), LEDn = 0.
			01	When $\overline{OE}$ = 1 (output drivers not enabled): LEDn = 1 when OUTDRV = 1 LEDn = high-impedance when OUTDRV = 0 (same as OUTNE[1:0] = 10)
			1X	When $\overline{OE}$ = 1 (output drivers not enabled), LEDn = high-impedance.

[1] See Section 7.7 "Using the PCA9685 with and without external drivers" for more details. Normal LEDs can be driven directly in either mode. Some newer LEDs include integrated Zener diodes to limit voltage transients, reduce EMI, protect the LEDs and these must be driven only in the open-drain mode to prevent overheating the IC. Power on reset default state of LEDn output pins is LOW.

[2] Change of the outputs at the STOP command allows synchronizing outputs of more than one PCA9685. Applicable to registers from 06h (LED0_ON_L) to 45h (LED15_OFF_H) only. 1 or more registers can be written, in any order, before STOP.

[3] Update on ACK requires **all** 4 PWM channel registers to be loaded before outputs will change on the **last** ACK.

[4] See Section 7.4 "Active LOW output enable input" for more details.

7.3.3 LED output and PWM control

The turn-on time of each LED driver output and the duty cycle of PWM can be controlled independently using the LEDn_ON and LEDn_OFF registers.

There will be two 12-bit registers per LED output. These registers will be programmed by the user. Both registers will hold a value from 0 to 4095. One 12-bit register will hold a value for the ON time and the other 12-bit register will hold the value for the OFF time. The ON and OFF times are compared with the value of a 12-bit counter that will be running continuously from 0000h to 0FFFh (0 to 4095 decimal).

Update on ACK requires all 4 PWM channel registers to be loaded before outputs will change on the last ACK.

The ON time, which is programmable, will be the time the LED output will be asserted and the OFF time, which is also programmable, will be the time when the LED output will be negated. In this way, the phase shift becomes completely programmable. The resolution for the phase shift is $^1/_{4096}$ of the target frequency. Table 7 lists these registers.

The following two examples illustrate how to calculate values to be loaded into these registers.

 © NXP Semiconductors N.V. 2015. All rights reserved.

원문: PCA9685.pdf (media.ncd.io) · 제조사 원문 자료입니다. 사양은 제조사 사정에 따라 변경될 수 있습니다.

Example 1: (assumes that the LED0 output is used and (delay time) + (PWM duty cycle) ≤ 100 %)

Delay time = 10 %; PWM duty cycle = 20 % (LED on time = 20 %; LED off time = 80 %).

Delay time = 10 % = 409.6 ~ 410 counts = 19Ah.

Since the counter starts at 0 and ends at 4095, we will subtract 1, so delay time = 199h counts.

LED0_ON_H = 1h; LED0_ON_L = 99h (LED start turn on after this delay count to 409)

LED on time = 20 % = 819.2 ~ 819 counts.

LED off time = 4CCh (decimal 410 + 819 – 1 = 1228)

LED0_OFF_H = 4h; LED0_OFF_L = CCh (LED start turn off after this count to 1228)

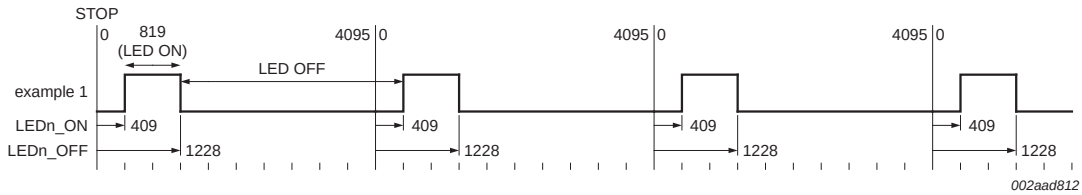

Fig 7. LED output, example 1

Example 2: (assumes that the LED4 output is used and (delay time) + (PWM duty cycle > 100 %)

Delay time = 90 %; PWM duty cycle = 90 % (LED on time = 90 %; LED off time = 10 %).

Delay time = 90 % = 3686.4 ~ 3686 counts – 1 = 3685 = E65h.

LED4_ON_H = Eh; LED4_ON_L = 65h (LED start turn on after this delay count to 3685)

LED on time = 90 % = 3686 counts.

Since the delay time and LED on period of the duty cycle is greater than 4096 counts, the LEDn_OFF count will occur in the next frame. Therefore, 4096 is subtracted from the LEDn_OFF count to get the correct LEDn_OFF count. See Figure 9, Figure 10 and Figure 11.

LED off time = CCBh (decimal 3685 + 3686 = 7372 – 4096 = 3275)

LED4_OFF_H = Ch; LED4_OFF_L = CBh (LED start turn off after this count to 3275)

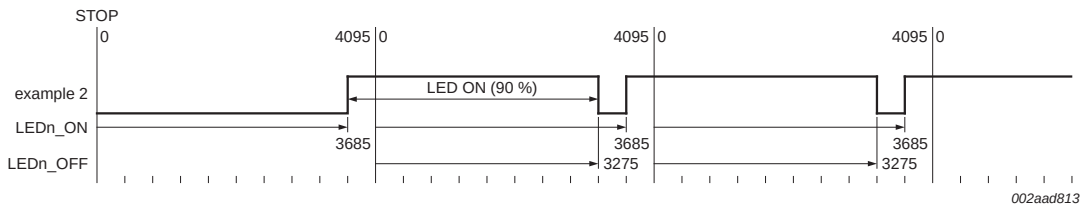

Fig 8. LED output, example 2

원문: PCA9685.pdf (media.ncd.io) · 제조사 원문 자료입니다. 사양은 제조사 사정에 따라 변경될 수 있습니다.

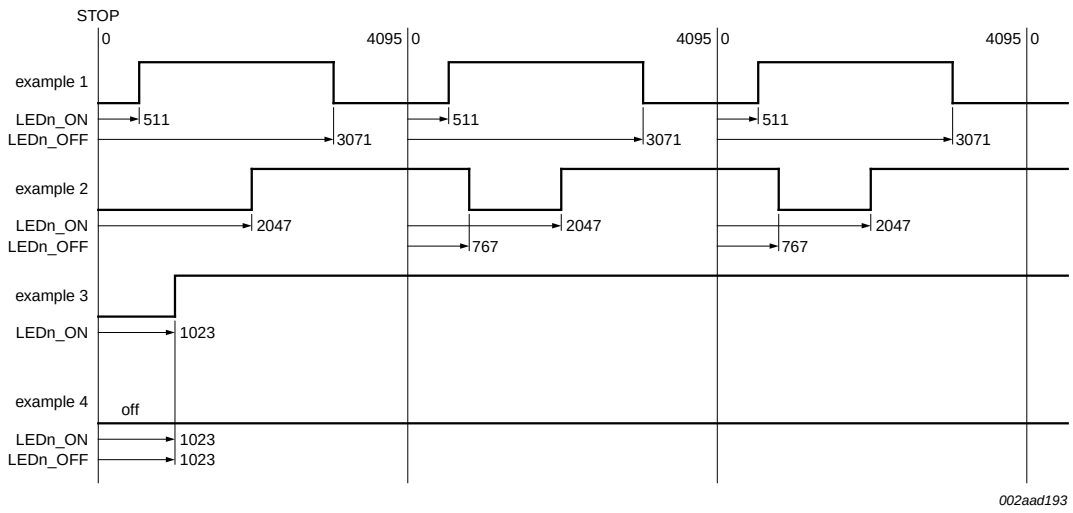

Example 1: LEDn_ON (511) < LEDn_OFF (3071)

Example 2: LEDn_ON (2047) > LEDn_OFF (767)

Example 3: LEDn_ON[12] = 1; LEDn_ON[11:0] = 1022; LEDn_OFF[12] = 0; LEDn_OFF[11:0] = don't care

Example 4: LEDn_ON[12] = 0; LEDn_OFF[12] = 0; LEDn_ON[11:0] = LEDn_OFF[11:0]

Fig 9. Output example

 © NXP Semiconductors N.V. 2015. All rights reserved.

원문: PCA9685.pdf (media.ncd.io) · 제조사 원문 자료입니다. 사양은 제조사 사정에 따라 변경될 수 있습니다.

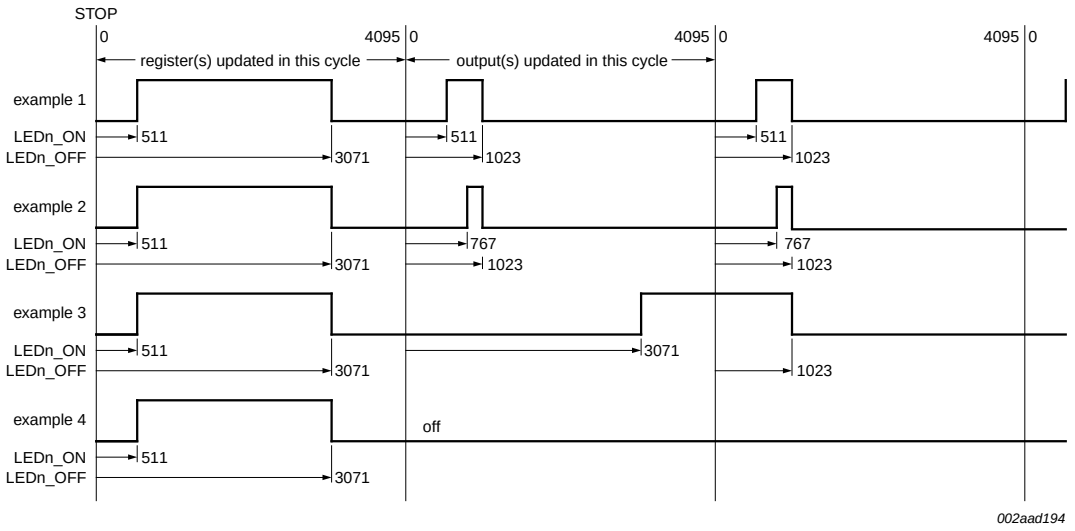

Example 1: LEDn_ON unchanged and LEDn_OFF decreased.

Example 2: LEDn_ON increased and LEDn_OFF decreased.

Example 3: LEDn_ON made > LEDn_OFF.

Example 4: LEDn_OFF[12] set to 1.

Fig 10. Update examples when LEDn_ON < LEDn_OFF

 © NXP Semiconductors N.V. 2015. All rights reserved.

원문: PCA9685.pdf (media.ncd.io) · 제조사 원문 자료입니다. 사양은 제조사 사정에 따라 변경될 수 있습니다.

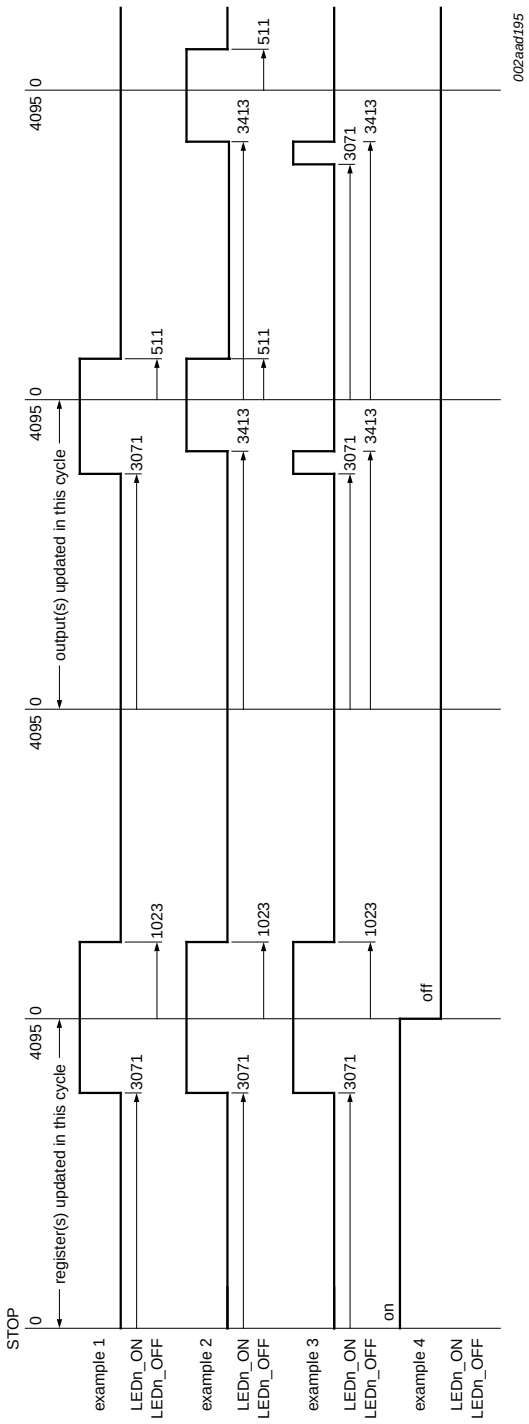

Example 1: LEDn_ON unchanged and LEDn_OFF decreased, but delay still > LEDn_OFF
Example 2: LEDn_ON changed and LEDn_OFF changed, but delay still > LEDn_OFF
Example 3: LEDn_ON unchanged and LEDn_OFF increased where LEDn_ON < LEDn_OFF
Example 4: LEDn_ON[12] = 1 and LEDn_OFF[12] changed from 0 to 1

Fig 11. Update examples when LEDn_ON > LEDn_OFF

All information provided in this document is subject to legal disclaimers.

© NXP Semiconductors N.V. 2015. All rights reserved.

원문: PCA9685.pdf (media.ncd.io) · 제조사 원문 자료입니다. 사양은 제조사 사정에 따라 변경될 수 있습니다.

Table 7. LED_ON, LED_OFF control registers (address 06h to 45h) bit description
*Legend: * default value.*

Address	Register	Bit	Symbol	Access	Value	Description
06h	LED0_ON_L	7:0	LED0_ON_L[7:0]	R/W	0000 0000*	LEDn_ON count for LED0, 8 LSBs
07h	LED0_ON_H	7:5	reserved	R	000*	non-writable
		4	LED0_ON_H[4]	R/W	0*	LED0 full ON
		3:0	LED0_ON_H[3:0]	R/W	0000*	LEDn_ON count for LED0, 4 MSBs
08h	LED0_OFF_L	7:0	LED0_OFF_L[7:0]	R/W	0000 0000*	LEDn_OFF count for LED0, 8 LSBs
09h	LED0_OFF_H	7:5	reserved	R	000*	non-writable
		4	LED0_OFF_H[4]	R/W	1*	LED0 full OFF
		3:0	LED0_OFF_H[3:0]	R/W	0000*	
0Ah	LED1_ON_L	7:0	LED1_ON_L[7:0]	R/W	0000 0000*	LEDn_ON count for LED1, 8 LSBs
0Bh	LED1_ON_H	7:5	reserved	R	000*	non-writable
		4	LED1_ON_H[4]	R/W	0*	LED1 full ON
		3:0	LED1_ON_H[3:0]	R/W	0000*	LEDn_ON count for LED1, 4 MSBs
0Ch	LED1_OFF_L	7:0	LED1_OFF_L[7:0]	R/W	0000 0000*	LEDn_OFF count for LED1, 8 LSBs
0Dh	LED1_OFF_H	7:5	reserved	R	000*	non-writable
		4	LED1_OFF_H[4]	R/W	1*	LED1 full OFF
		3:0	LED1_OFF_H[3:0]	R/W	0000*	LEDn_OFF count for LED1, 4 MSBs
0Eh	LED2_ON_L	7:0	LED2_ON_L[7:0]	R/W	0000 0000*	LEDn_ON count for LED2, 8 LSBs
0Fh	LED2_ON_H	7:5	reserved	R	000*	non-writable
		4	LED2_ON_H[4]	R/W	0*	LED2 full ON
		3:0	LED2_ON_H[3:0]	R/W	0000*	LEDn_ON count for LED2, 4 MSBs
10h	LED2_OFF_L	7:0	LED2_OFF_L[7:0]	R/W	0000 0000*	LEDn_OFF count for LED2, 8 LSBs
11h	LED2_OFF_H	7:5	reserved	R	000*	non-writable
		4	LED2_OFF_H[4]	R/W	1*	LED2 full OFF
		3:0	LED2_OFF_H[3:0]	R/W	0000*	LEDn_OFF count for LED2, 4 MSBs
12h	LED3_ON_L	7:0	LED3_ON_L[7:0]	R/W	0000 0000*	LEDn_ON count for LED3, 8 LSBs
13h	LED3_ON_H	7:5	reserved	R	000*	non-writable
		4	LED3_ON_H[4]	R/W	0*	LED3 full ON
		3:0	LED3_ON_H[3:0]	R/W	0000*	LEDn_ON count for LED3, 4 MSBs
14h	LED3_OFF_L	7:0	LED3_OFF_L[7:0]	R/W	0000 0000*	LEDn_OFF count for LED3, 8 LSBs
15h	LED3_OFF_H	7:5	reserved	R	000*	non-writable
		4	LED3_OFF_H[4]	R/W	1*	LED3 full OFF
		3:0	LED3_OFF_H[3:0]	R/W	0000*	LEDn_OFF count for LED3, 4 MSBs
16h	LED4_ON_L	7:0	LED4_ON_L[7:0]	R/W	0000 0000*	LEDn_ON count for LED4, 8 LSBs
17h	LED4_ON_H	7:5	reserved	R	000*	non-writable
		4	LED4_ON_H[4]	R/W	0*	LED4 full ON
		3:0	LED4_ON_H[3:0]	R/W	0000*	LEDn_ON count for LED4, 4 MSBs

All information provided in this document is subject to legal disclaimers.
© NXP Semiconductors N.V. 2015. All rights reserved.

원문: PCA9685.pdf (media.ncd.io) · 제조사 원문 자료입니다. 사양은 제조사 사정에 따라 변경될 수 있습니다.

Table 7. LED_ON, LED_OFF control registers (address 06h to 45h) bit description *...continued*
*Legend: * default value.*

Address	Register	Bit	Symbol	Access	Value	Description
18h	LED4_OFF_L	7:0	LED4_OFF_L[7:0]	R/W	0000 0000*	LEDn_OFF count for LED4, 8 LSBs
19h	LED4_OFF_H	7:5	reserved	R	000*	non-writable
		4	LED4_OFF_H[4]	R/W	1*	LED4 full OFF
		3:0	LED4_OFF_H[3:0]	R/W	0000*	LEDn_OFF count for LED4, 4 MSBs
1Ah	LED5_ON_L	7:0	LED5_ON_L[7:0]	R/W	0000 0000*	LEDn_ON count for LED5, 8 LSBs
1Bh	LED5_ON_H	7:5	reserved	R	000*	non-writable
		4	LED5_ON_H[4]	R/W	0*	LED5 full ON
		3:0	LED5_ON_H[3:0]	R/W	0000*	LEDn_ON count for LED5, 4 MSBs
1Ch	LED5_OFF_L	7:0	LED5_OFF_L[7:0]	R/W	0000 0000*	LEDn_OFF count for LED5, 8 LSBs
1Dh	LED5_OFF_H	7:5	reserved	R	000*	non-writable
		4	LED5_OFF_H[4]	R/W	1*	LED5 full OFF
		3:0	LED5_OFF_H[3:0]	R/W	0000*	LEDn_OFF count for LED5, 4 MSBs
1Eh	LED6_ON_L	7:0	LED6_ON_L[7:0]	R/W	0000 0000*	LEDn_ON count for LED6, 8 LSBs
1Fh	LED6_ON_H	7:5	reserved	R	000*	non-writable
		4	LED6_ON_H[4]	R/W	0*	LED6 full ON
		3:0	LED6_ON_H[3:0]	R/W	0000*	LEDn_ON count for LED6, 4 MSBs
20h	LED6_OFF_L	7:0	LED6_OFF_L[7:0]	R/W	0000 0000*	LEDn_OFF count for LED6, 8 LSBs
21h	LED6_OFF_H	7:5	reserved	R	000*	non-writable
		4	LED6_OFF_H[4]	R/W	1*	LED6 full OFF
		3:0	LED6_OFF_H[3:0]	R/W	0000*	LEDn_OFF count for LED6, 4 MSBs
22h	LED7_ON_L	7:0	LED7_ON_L[7:0]	R/W	0000 0000*	LEDn_ON count for LED7, 8 LSBs
23h	LED7_ON_H	7:5	reserved	R	000*	non-writable
		4	LED7_ON_H[4]	R/W	0*	LED7 full ON
		3:0	LED7_ON_H[3:0]	R/W	0000*	LEDn_ON count for LED7, 4 MSBs
24h	LED7_OFF_L	7:0	LED7_OFF_L[7:0]	R/W	0000 0000*	LEDn_OFF count for LED7, 8 LSBs
25h	LED7_OFF_H	7:5	reserved	R	000*	non-writable
		4	LED7_OFF_H[4]	R/W	1*	LED7 full OFF
		3:0	LED7_OFF_H[3:0]	R/W	0000*	LEDn_OFF count for LED7, 4 MSBs
26h	LED8_ON_L	7:0	LED8_ON_L[7:0]	R/W	0000 0000*	LEDn_ON count for LED8, 8 LSBs
27h	LED8_ON_H	7:5	reserved	R	000*	non-writable
		4	LED8_ON_H[4]	R/W	0*	LED8 full ON
		3:0	LED8_ON_H[3:0]	R/W	0000*	LEDn_ON count for LED8, 4 MSBs
28h	LED8_OFF_L	7:0	LED8_OFF_L[7:0]	R/W	0000 0000*	LEDn_OFF count for LED8, 8 LSBs
29h	LED8_OFF_H	7:5	reserved	R	000*	non-writable
		4	LED8_OFF_H[4]	R/W	1*	LED8 full OFF
		3:0	LED8_OFF_H[3:0]	R/W	0000*	LEDn_OFF count for LED8, 4 MSBs

 © NXP Semiconductors N.V. 2015. All rights reserved.

원문: PCA9685.pdf (media.ncd.io) · 제조사 원문 자료입니다. 사양은 제조사 사정에 따라 변경될 수 있습니다.

Table 7. LED_ON, LED_OFF control registers (address 06h to 45h) bit description *...continued*
*Legend: * default value.*

Address	Register	Bit	Symbol	Access	Value	Description
2Ah	LED9_ON_L	7:0	LED9_ON_L[7:0]	R/W	0000 0000*	LEDn_ON count for LED9, 8 LSBs
2Bh	LED9_ON_H	7:5	reserved	R	000*	non-writable
		4	LED9_ON_H[4]	R/W	0*	LED9 full ON
		3:0	LED9_ON_H[3:0]	R/W	0000*	LEDn_ON count for LED9, 4 MSBs
2Ch	LED9_OFF_L	7:0	LED9_OFF_L[7:0]	R/W	0000 0000*	LEDn_OFF count for LED9, 8 LSBs
2Dh	LED9_OFF_H	7:5	reserved	R	000*	non-writable
		4	LED9_OFF_H[4]	R/W	1*	LED9 full OFF
		3:0	LED9_OFF_H[3:0]	R/W	0000*	LEDn_OFF count for LED9, 4 MSBs
2Eh	LED10_ON_L	7:0	LED10_ON_L[7:0]	R/W	0000 0000*	LEDn_ON count for LED10, 8 LSBs
2Fh	LED10_ON_H	7:5	reserved	R	000*	non-writable
		4	LED10_ON_H[4]	R/W	0*	LED10 full ON
		3:0	LED10_ON_H[3:0]	R/W	0000*	LEDn_ON count for LED10, 4 MSBs
30h	LED10_OFF_L	7:0	LED10_OFF_L[7:0]	R/W	0000 0000*	LEDn_OFF count for LED10, 8 LSBs
31h	LED10_OFF_H	7:5	reserved	R	000*	non-writable
		4	LED10_OFF_H[4]	R/W	1*	LED10 full OFF
		3:0	LED10_OFF_H[3:0]	R/W	0000*	LEDn_OFF count for LED10, 4 MSBs
32h	LED11_ON_L	7:0	LED11_ON_L[7:0]	R/W	0000 0000*	LEDn_ON count for LED11, 8 LSBs
33h	LED11_ON_H	7:5	reserved	R	000*	non-writable
		4	LED11_ON_H[4]	R/W	0*	LED11 full ON
		3:0	LED11_ON_H[3:0]	R/W	0000*	LEDn_ON count for LED11, 4 MSBs
34h	LED11_OFF_L	7:0	LED11_OFF_L[7:0]	R/W	0000 0000*	LEDn_OFF count for LED11, 8 LSBs
35h	LED11_OFF_H	7:5	reserved	R	000*	non-writable
		4	LED11_OFF_H[4]	R/W	1*	LED11 full OFF
		3:0	LED11_OFF_H[3:0]	R/W	0000*	LEDn_OFF count for LED11, 4 MSBs
36h	LED12_ON_L	7:0	LED12_ON_L[7:0]	R/W	0000 0000*	LEDn_ON count for LED12, 8 LSBs
37h	LED12_ON_H	7:5	reserved	R	000*	non-writable
		4	LED12_ON_H[4]	R/W	0*	LED12 full ON
		3:0	LED12_ON_H[3:0]	R/W	0000*	LEDn_ON count for LED12, 4 MSBs
38h	LED12_OFF_L	7:0	LED12_OFF_L[7:0]	R/W	0000 0000*	LEDn_OFF count for LED12, 8 LSBs
39h	LED12_OFF_H	7:5	reserved	R	000*	non-writable
		4	LED12_OFF_H[4]	R/W	1*	LED12 full OFF
		3:0	LED12_OFF_H[3:0]	R/W	0000*	LEDn_OFF count for LED12, 4 MSBs
3Ah	LED13_ON_L	7:0	LED13_ON_L[7:0]	R/W	0000 0000*	LEDn_ON count for LED13, 8 LSBs
3Bh	LED13_ON_H	7:5	reserved	R	000*	non-writable
		4	LED13_ON_H[4]	R/W	0*	LED13 full ON
		3:0	LED13_ON_H[3:0]	R/W	0000*	LEDn_ON count for LED13, 4 MSBs

All information provided in this document is subject to legal disclaimers.
© NXP Semiconductors N.V. 2015. All rights reserved.

원문: PCA9685.pdf (media.ncd.io) · 제조사 원문 자료입니다. 사양은 제조사 사정에 따라 변경될 수 있습니다.

Table 7. LED_ON, LED_OFF control registers (address 06h to 45h) bit description *...continued*

*Legend: * default value.*

Address	Register	Bit	Symbol	Access	Value	Description
3Ch	LED13_OFF_L	7:0	LED13_OFF_L[7:0]	R/W	0000 0000*	LEDn_OFF count for LED13, 8 LSBs
3Dh	LED13_OFF_H	7:5	reserved	R	000*	non-writable
		4	LED13_OFF_H[4]	R/W	1*	LED13 full OFF
		3:0	LED13_OFF_H[3:0]	R/W	0000*	LEDn_OFF count for LED13, 4 MSBs
3Eh	LED14_ON_L	7:0	LED14_ON_L[7:0]	R/W	0000 0000*	LEDn_ON count for LED14, 8 LSBs
3Fh	LED14_ON_H	7:5	reserved	R	000*	non-writable
		4	LED14_ON_H[4]	R/W	0*	LED14 full ON
		3:0	LED14_ON_H[3:0]	R/W	0000*	LEDn_ON count for LED14, 4 MSBs
40h	LED14_OFF_L	7:0	LED14_OFF_L[7:0]	R/W	0000 0000*	LEDn_OFF count for LED14, 8 LSBs
41h	LED14_OFF_H	7:5	reserved	R	000*	non-writable
		4	LED14_OFF_H[4]	R/W	1*	LED14 full OFF
		3:0	LED14_OFF_H[3:0]	R/W	0000*	LEDn_OFF count for LED14, 4 MSBs
42h	LED15_ON_L	7:0	LED15_ON_L[7:0]	R/W	0000 0000*	LEDn_ON count for LED15, 8 LSBs
43h	LED15_ON_H	7:5	reserved	R	000*	non-writable
		4	LED15_ON_H[4]	R/W	0*	LED15 full ON
		3:0	LED15_ON_H[3:0]	R/W	0000*	LEDn_ON count for LED15, 4 MSBs
44h	LED15_OFF_L	7:0	LED15_OFF_L[7:0]	R/W	0000 0000*	LEDn_OFF count for LED15, 8 LSBs
45h	LED15_OFF_H	7:5	reserved	R	000*	non-writable
		4	LED15_OFF_H[4]	R/W	1*	LED15 full OFF
		3:0	LED15_OFF_H[3:0]	R/W	0000*	LEDn_OFF count for LED15, 4 MSBs

The LEDn_ON_H output control bit 4, when set to logic 1, causes the output to be always ON. The turning ON of the LED is delayed by the amount in the LEDn_ON registers. LEDn_OFF[11:0] are ignored. When this bit = 0, then the LEDn_ON and LEDn_OFF registers are used according to their normal definition.

The LEDn_OFF_H output control bit 4, when set to logic 1, causes the output to be always OFF. In this case the values in the LEDn_ON registers are ignored.

Remark: When all LED outputs are configured as 'always OFF', the prescale counter and all associated PWM cycle timing logic are disabled. If LEDn_ON_H[4] and LEDn_OFF_H[4] are set at the same time, the LEDn_OFF_H[4] function takes precedence.

All information provided in this document is subject to legal disclaimers.

© NXP Semiconductors N.V. 2015. All rights reserved.

원문: PCA9685.pdf (media.ncd.io) · 제조사 원문 자료입니다. 사양은 제조사 사정에 따라 변경될 수 있습니다.

7.3.4 ALL_LED_ON and ALL_LED_OFF control

The ALL_LED_ON and ALL_LED_OFF registers allow just four I²C-bus write sequences to fill all the ON and OFF registers with the same patterns.

Table 8. ALL_LED_ON and ALL_LED_OFF control registers (address FAh to FEh) bit description
*Legend: * default value.*

Address	Register	Bit	Symbol	Access	Value	Description
FAh	ALL_LED_ON_L	7:0	ALL_LED_ON_L[7:0]	W only	0000 0000*	LEDn_ON count for ALL_LED, 8 MSBs
FBh	ALL_LED_ON_H	7:5	reserved	R	000*	non-writable
		4	ALL_LED_ON_H[4]	W only	1*	ALL_LED full ON
		3:0	ALL_LED_ON_H[3:0]	W only	0000*	LEDn_ON count for ALL_LED, 4 MSBs
FCh	ALL_LED_OFF_L	7:0	ALL_LED_OFF_L[7:0]	W only	0000 0000*	LEDn_OFF count for ALL_LED, 8 MSBs
FDh	ALL_LED_OFF_H	7:5	reserved	R	000*	non-writable
		4	ALL_LED_OFF_H[4]	W only	1*	ALL_LED full OFF
		3:0	ALL_LED_OFF_H[3:0]	W only	0000*	LEDn_OFF count for ALL_LED, 4 MSBs
FEh	PRE_SCALE	7:0	PRE_SCALE[7:0]	R/W	0001 1110*	prescaler to program the PWM output frequency (default is 200 Hz)

The LEDn_ON and LEDn_OFF counts can vary from 0 to 4095. The LEDn_ON and LEDn_OFF count registers should never be programmed with the same values.

Because the loading of the LEDn_ON and LEDn_OFF registers is via the I²C-bus, and asynchronous to the internal oscillator, we want to ensure that we do not see any visual artifacts of changing the ON and OFF values. This is achieved by updating the changes at the end of the LOW cycle.

7.3.5 PWM frequency PRE_SCALE

The hardware forces a minimum value that can be loaded into the PRE_SCALE register at '3'. The PRE_SCALE register defines the frequency at which the outputs modulate. The prescale value is determined with the formula shown in Equation 1:

$$prescale\ value = round\left(\frac{osc_clock}{4096 \times update_rate}\right) - 1 \quad (1)$$

where the update rate is the output modulation frequency required. For example, for an output default frequency of 200 Hz with an oscillator clock frequency of 25 MHz:

$$prescale\ value = round\left(\frac{25\ MHz}{4096 \times 200}\right) - 1 = 30\ (0x1Eh) \quad (2)$$

The maximum PWM frequency is 1526 Hz if the PRE_SCALE register is set "0x03h".

The minimum PWM frequency is 24 Hz if the PRE_SCALE register is set "0xFFh".

The PRE_SCALE register can only be set when the SLEEP bit of MODE1 register is set to logic 1.

 © NXP Semiconductors N.V. 2015. All rights reserved.

원문: PCA9685.pdf (media.ncd.io) · 제조사 원문 자료입니다. 사양은 제조사 사정에 따라 변경될 수 있습니다.

we measure, we calibrate, we validate. ㈜테솔 · www.tessol.com TS-TL-NCD-401 25 / 52
KOLAS 국제공인교정기관 · ISO/IEC 17025

TESSOL Technical Library TS-TL-NCD-401

7.3.6 SUBADR1 to SUBADR3, I²C-bus subaddress 1 to 3

Table 9. SUBADR1 to SUBADR3 - I²C-bus subaddress registers 0 to 3 (address 02h to 04h) bit description

*Legend: * default value.*

Address	Register	Bit	Symbol	Access	Value	Description
02h	SUBADR1	7:1	A1[7:1]	R/W	1110 001*	I²C-bus subaddress 1
		0	A1[0]	R only	0*	reserved
03h	SUBADR2	7:1	A2[7:1]	R/W	1110 010*	I²C-bus subaddress 2
		0	A2[0]	R only	0*	reserved
04h	SUBADR3	7:1	A3[7:1]	R/W	1110 100*	I²C-bus subaddress 3
		0	A3[0]	R only	0*	reserved

Subaddresses are programmable through the I²C-bus. Default power-up values are E2h, E4h, E8h, and the device(s) will not acknowledge these addresses right after power-up (the corresponding SUBx bit in MODE1 register is equal to 0).

Once subaddresses have been programmed to their right values, SUBx bits need to be set to logic 1 in order to have the device acknowledging these addresses (MODE1 register).

Only the 7 MSBs representing the I²C-bus subaddress are valid. The LSB in SUBADRx register is a read-only bit (0).

When SUBx is set to logic 1, the corresponding I²C-bus subaddress can be used during either an I²C-bus read or write sequence.

7.3.7 ALLCALLADR, LED All Call I²C-bus address

Table 10. ALLCALLADR - LED All Call I²C-bus address register (address 05h) bit description

*Legend: * default value.*

Address	Register	Bit	Symbol	Access	Value	Description
05h	ALLCALLADR	7:1	AC[7:1]	R/W	1110 000*	ALLCALL I²C-bus address register
		0	AC[0]	R only	0*	reserved

The LED All Call I²C-bus address allows all the PCA9685s in the bus to be programmed at the same time (ALLCALL bit in register MODE1 must be equal to 1 (power-up default state)). This address is programmable through the I²C-bus and can be used during either an I²C-bus read or write sequence. The register address can also be programmed as a Sub Call.

Only the 7 MSBs representing the All Call I²C-bus address are valid. The LSB in ALLCALLADR register is a read-only bit (0).

If ALLCALL bit = 0, the device does not acknowledge the address programmed in register ALLCALLADR.

 © NXP Semiconductors N.V. 2015. All rights reserved.

원문: PCA9685.pdf (media.ncd.io) · 제조사 원문 자료입니다. 사양은 제조사 사정에 따라 변경될 수 있습니다.

7.4 Active LOW output enable input

The active LOW output enable ($\overline{OE}$) pin, allows to enable or disable all the LED outputs at the same time.

- When a LOW level is applied to $\overline{OE}$ pin, all the LED outputs are enabled and follow the output state defined in the LEDn_ON and LEDn_OFF registers with the polarity defined by INVRT bit (MODE2 register).
- When a HIGH level is applied to $\overline{OE}$ pin, all the LED outputs are programmed to the value that is defined by OUTNE[1:0] in the MODE2 register.

Table 11. LED outputs when $\overline{OE}$ = 1

OUTNE1	OUTNE0	LED outputs
0	0	0
0	1	1 if OUTDRV = 1, high-impedance if OUTDRV = 0
1	0	high-impedance
1	1	high-impedance

The $\overline{OE}$ pin can be used as a synchronization signal to switch on/off several PCA9685 devices at the same time. This requires an external clock reference that provides blinking period and the duty cycle.

The $\overline{OE}$ pin can also be used as an external dimming control signal. The frequency of the external clock must be high enough not to be seen by the human eye, and the duty cycle value determines the brightness of the LEDs.

7.5 Power-on reset

When power is applied to V_{DD}, an internal power-on reset holds the PCA9685 in a reset condition until V_{DD} has reached V_{POR}. At this point, the reset condition is released and the PCA9685 registers and I²C-bus state machine are initialized to their default states. Thereafter, V_{DD} must be lowered below 0.2 V to reset the device.

 © NXP Semiconductors N.V. 2015. All rights reserved.

원문: PCA9685.pdf (media.ncd.io) · 제조사 원문 자료입니다. 사양은 제조사 사정에 따라 변경될 수 있습니다.

7.6 Software reset

The Software Reset Call (SWRST Call) allows all the devices in the I²C-bus to be reset to the power-up state value through a specific formatted I²C-bus command. To be performed correctly, it implies that the I²C-bus is functional and that there is no device hanging the bus.

The SWRST Call function is defined as the following:

1. A START command is sent by the I²C-bus master.
2. The reserved SWRST I²C-bus address ‘0000 000’ with the R/$\overline{W}$ bit set to ‘0’ (write) is sent by the I²C-bus master.
3. The PCA9685 device(s) acknowledge(s) after seeing the General Call address ‘0000 0000’ (00h) only. If the R/$\overline{W}$ bit is set to ‘1’ (read), no acknowledge is returned to the I²C-bus master.
4. Once the General Call address has been sent and acknowledged, the master sends 1 byte with 1 specific value (SWRST data byte 1):
   a. Byte 1 = 06h: the PCA9685 acknowledges this value only. If byte 1 is not equal to 06h, the PCA9685 does not acknowledge it.

   If more than 1 byte of data is sent, the PCA9685 does not acknowledge any more.
5. Once the correct byte (SWRST data byte 1) has been sent and correctly acknowledged, the master sends a STOP command to end the SWRST Call: the PCA9685 then resets to the default value (power-up value) and is ready to be addressed again within the specified bus free time (t_{BUF}).

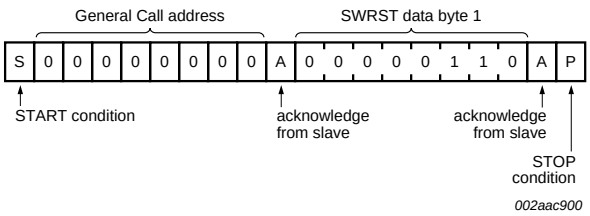

Fig 12. SWRST Call

The I²C-bus master must interpret a non-acknowledge from the PCA9685 (at any time) as a ‘SWRST Call Abort’. The PCA9685 does not initiate a reset of its registers. This happens only when the format of the SWRST Call sequence is not correct.

 © NXP Semiconductors N.V. 2015. All rights reserved.

원문: PCA9685.pdf (media.ncd.io) · 제조사 원문 자료입니다. 사양은 제조사 사정에 따라 변경될 수 있습니다.

we measure, we calibrate, we validate. ㈜테솔 · www.tessol.com TS-TL-NCD-401 28 / 52
KOLAS 국제공인교정기관 · ISO/IEC 17025

TESSOL Technical Library TS-TL-NCD-401

7.7 Using the PCA9685 with and without external drivers

The PCA9685 LED output drivers are 5.5 V only tolerant and can sink up to 25 mA at 5 V.

If the device needs to drive LEDs to a higher voltage and/or higher current, use of an external driver is required.

- INVRT bit (MODE2 register) can be used to keep the LED PWM control firmware the same independently of the type of external driver. This bit allows LED output polarity inversion/non-inversion only when $\overline{OE}$ = 0.
- OUTDRV bit (MODE2 register) allows minimizing the amount of external components required to control the external driver (N-type or P-type device).

Table 12. Use of INVRT and OUTDRV based on connection to the LEDn outputs when $\overline{OE}$ = 0[1]

INVRT	OUTDRV	Direct connection to LEDn		External N-type driver		External P-type driver	
		Firmware	External pull-up resistor	Firmware	External pull-up resistor	Firmware	External pull-up resistor
0	0	formulas and LED output state values inverted	LED current limiting R[2]	formulas and LED output state values inverted	required	formulas and LED output state values apply	required
0	1	formulas and LED output state values inverted	LED current limiting R[2]	formulas and LED output state values apply[3]	not required[3]	formulas and LED output state values inverted	not required
1	0	formulas and LED output state values apply[2]	LED current limiting R	formulas and LED output state values apply	required	formulas and LED output state values inverted	required
1	1	formulas and LED output state values apply[2]	LED current limiting R	formulas and LED output state values inverted	not required	formulas and LED output state values apply[4]	not required[4]

[1] When $\overline{OE}$ = 1, LED output state is controlled only by OUTNE[1:0] bits (MODE2 register).

[2] Correct configuration when LEDs directly connected to the LEDn outputs (connection to V_{DD} through current limiting resistor).

[3] Optimum configuration when external N-type (NPN, NMOS) driver used.

[4] Optimum configuration when external P-type (PNP, PMOS) driver used.

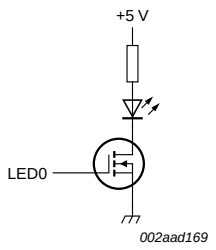

INVRT = 0
OUTDRV = 1

Fig 13. External N-type driver

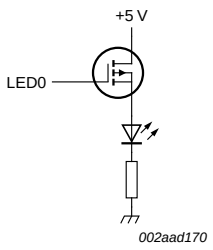

INVRT = 1
OUTDRV = 1

Fig 14. External P-type driver

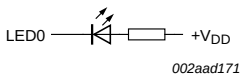

INVRT = 1
OUTDRV = 0

Fig 15. Direct LED connection

원문: PCA9685.pdf (media.ncd.io) · 제조사 원문 자료입니다. 사양은 제조사 사정에 따라 변경될 수 있습니다.

we measure, we calibrate, we validate.
㈜테솔 · www.tessol.com TS-TL-NCD-401 29 / 52
KOLAS 국제공인교정기관 · ISO/IEC 17025

TESSOL Technical Library
TS-TL-NCD-401

8. Characteristics of the I²C-bus

The I²C-bus is for 2-way, 2-line communication between different ICs or modules. The two lines are a serial data line (SDA) and a serial clock line (SCL). Both lines must be connected to a positive supply via a pull-up resistor when connected to the output stages of a device. Data transfer may be initiated only when the bus is not busy.

8.1 Bit transfer

One data bit is transferred during each clock pulse. The data on the SDA line must remain stable during the HIGH period of the clock pulse as changes in the data line at this time will be interpreted as control signals (see Figure 16).

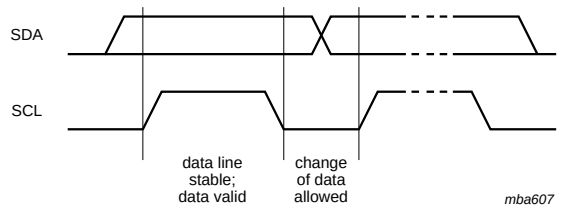

Fig 16. Bit transfer

8.1.1 START and STOP conditions

Both data and clock lines remain HIGH when the bus is not busy. A HIGH-to-LOW transition of the data line while the clock is HIGH is defined as the START condition (S). A LOW-to-HIGH transition of the data line while the clock is HIGH is defined as the STOP condition (P) (see Figure 17).

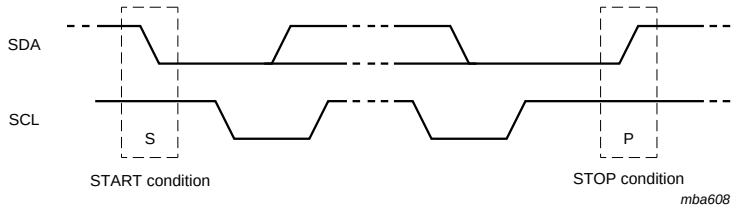

Fig 17. Definition of START and STOP conditions

8.2 System configuration

A device generating a message is a ‘transmitter’; a device receiving is the ‘receiver’. The device that controls the message is the ‘master’ and the devices which are controlled by the master are the ‘slaves’ (see Figure 18).

© NXP Semiconductors N.V. 2015. All rights reserved.

원문: PCA9685.pdf (media.ncd.io) · 제조사 원문 자료입니다. 사양은 제조사 사정에 따라 변경될 수 있습니다.

we measure, we calibrate, we validate. ㈜테솔 · www.tessol.com TS-TL-NCD-401 30 / 52
KOLAS 국제공인교정기관 · ISO/IEC 17025

TESSOL Technical Library TS-TL-NCD-401

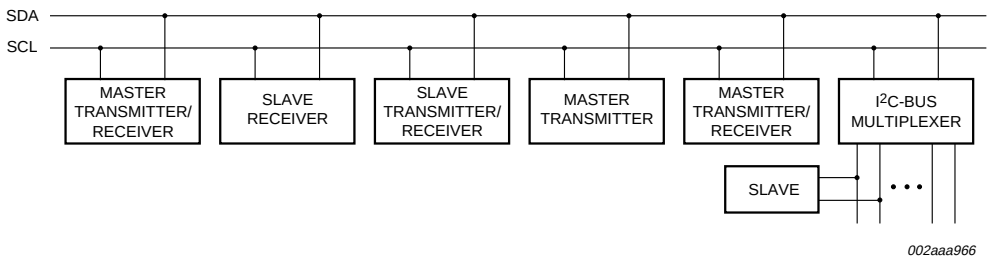

Fig 18. System configuration

8.3 Acknowledge

The number of data bytes transferred between the START and the STOP conditions from transmitter to receiver is not limited. Each byte of eight bits is followed by one acknowledge bit. The acknowledge bit is a HIGH level put on the bus by the transmitter, whereas the master generates an extra acknowledge related clock pulse.

A slave receiver which is addressed must generate an acknowledge after the reception of each byte. Also a master must generate an acknowledge after the reception of each byte that has been clocked out of the slave transmitter. The device that acknowledges has to pull down the SDA line during the acknowledge clock pulse, so that the SDA line is stable LOW during the HIGH period of the acknowledge related clock pulse; set-up time and hold time must be taken into account.

A master receiver must signal an end of data to the transmitter by not generating an acknowledge on the last byte that has been clocked out of the slave. In this event, the transmitter must leave the data line HIGH to enable the master to generate a STOP condition.

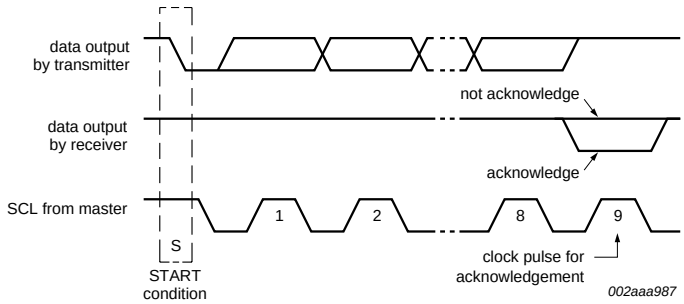

Fig 19. Acknowledgement on the I²C-bus

© NXP Semiconductors N.V. 2015. All rights reserved.

원문: PCA9685.pdf (media.ncd.io) · 제조사 원문 자료입니다. 사양은 제조사 사정에 따라 변경될 수 있습니다.

we measure, we calibrate, we validate. ㈜테솔 · www.tessol.com TS-TL-NCD-401 31 / 52
KOLAS 국제공인교정기관 · ISO/IEC 17025

TESSOL Technical Library
TS-TL-NCD-401

9. Bus transactions

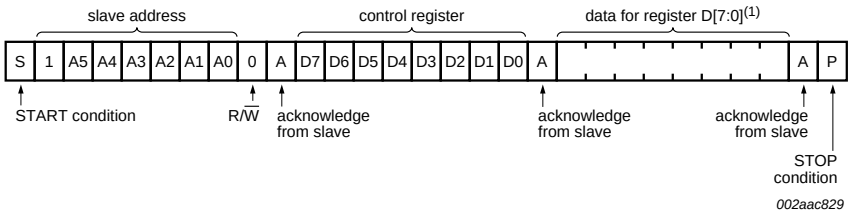

(1) See Table 4 for register definition.

Fig 20. Write to a specific register

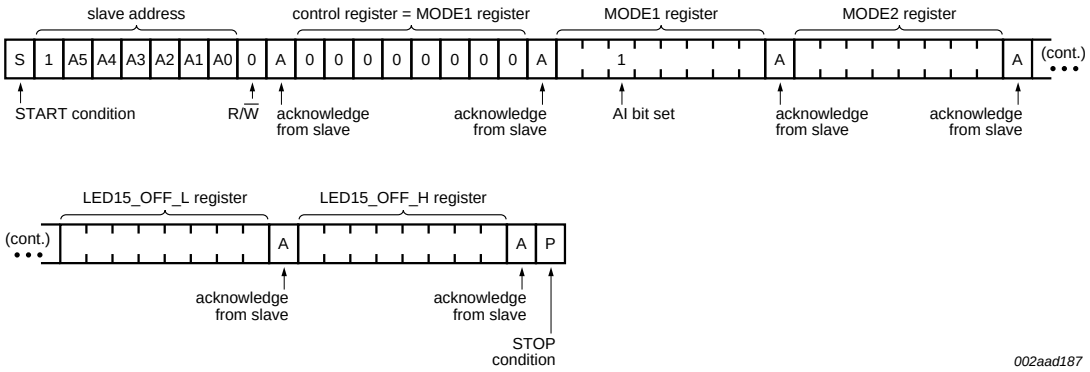

Fig 21. Write to all registers using the Auto-Increment feature; AI initially clear

© NXP Semiconductors N.V. 2015. All rights reserved.

원문: PCA9685.pdf (media.ncd.io) · 제조사 원문 자료입니다. 사양은 제조사 사정에 따라 변경될 수 있습니다.

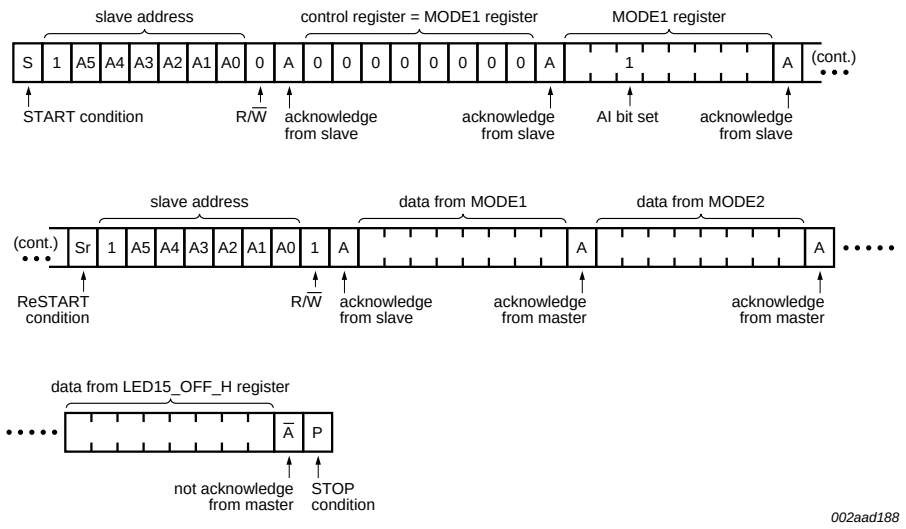

Fig 22. Read all registers using the Auto-Increment feature; AI initially clear

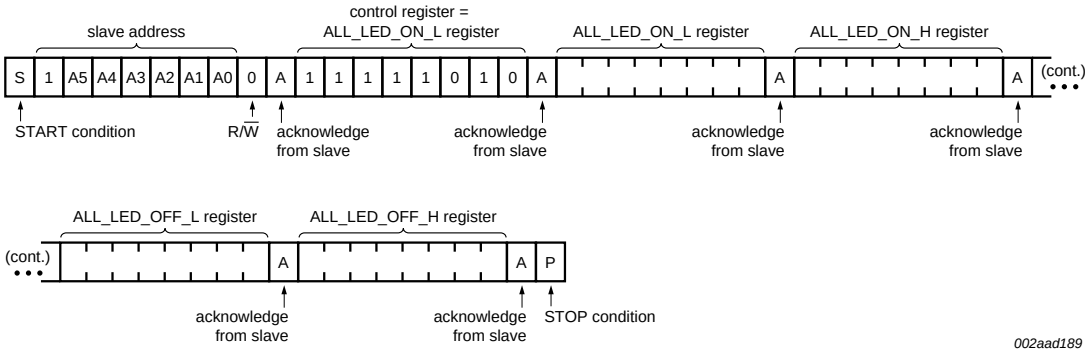

Fig 23. Write to ALL_LED_ON and ALL_LED_OFF registers using the Auto-Increment feature; AI initially set

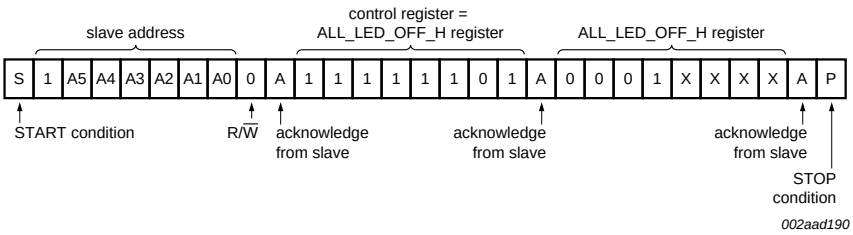

Fig 24. Write to ALL_LED_OFF_H to turn OFF all PWMs

원문: PCA9685.pdf (media.ncd.io) · 제조사 원문 자료입니다. 사양은 제조사 사정에 따라 변경될 수 있습니다.

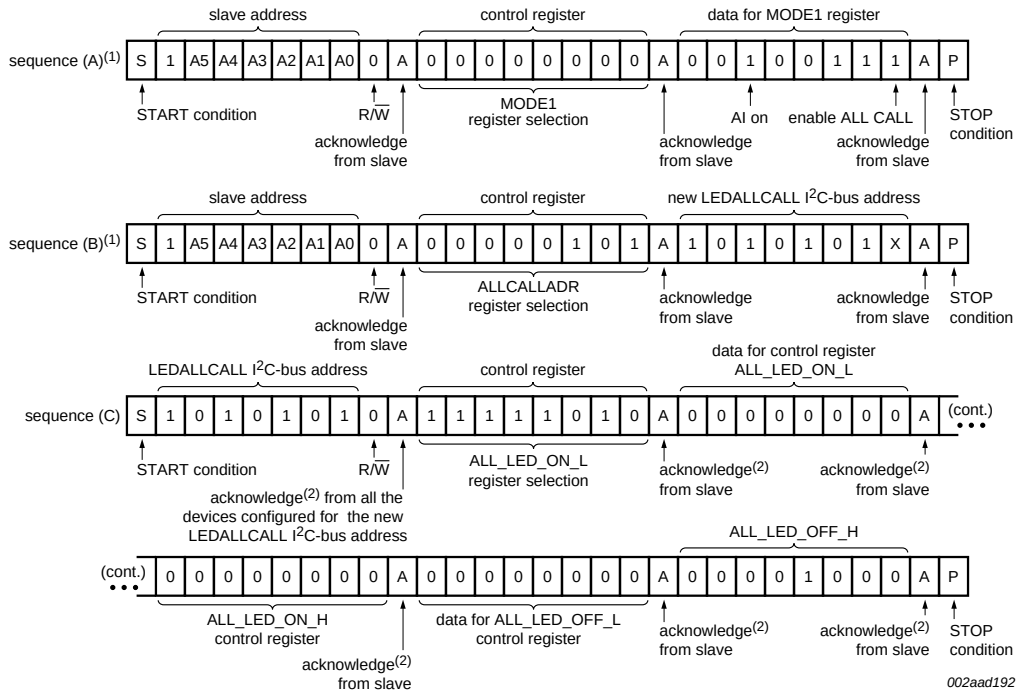

(1) In this example, several PCA9685s are used and the same sequences (A) and (B) above are sent to each of them.

(2) Acknowledge from all the slave devices configured for the new LED All Call I²C-bus address in sequence (B).

Fig 25. LED All Call I²C-bus address programming and LED All Call sequence example

 © NXP Semiconductors N.V. 2015. All rights reserved.

원문: PCA9685.pdf (media.ncd.io) · 제조사 원문 자료입니다. 사양은 제조사 사정에 따라 변경될 수 있습니다.

10. Application design-in information

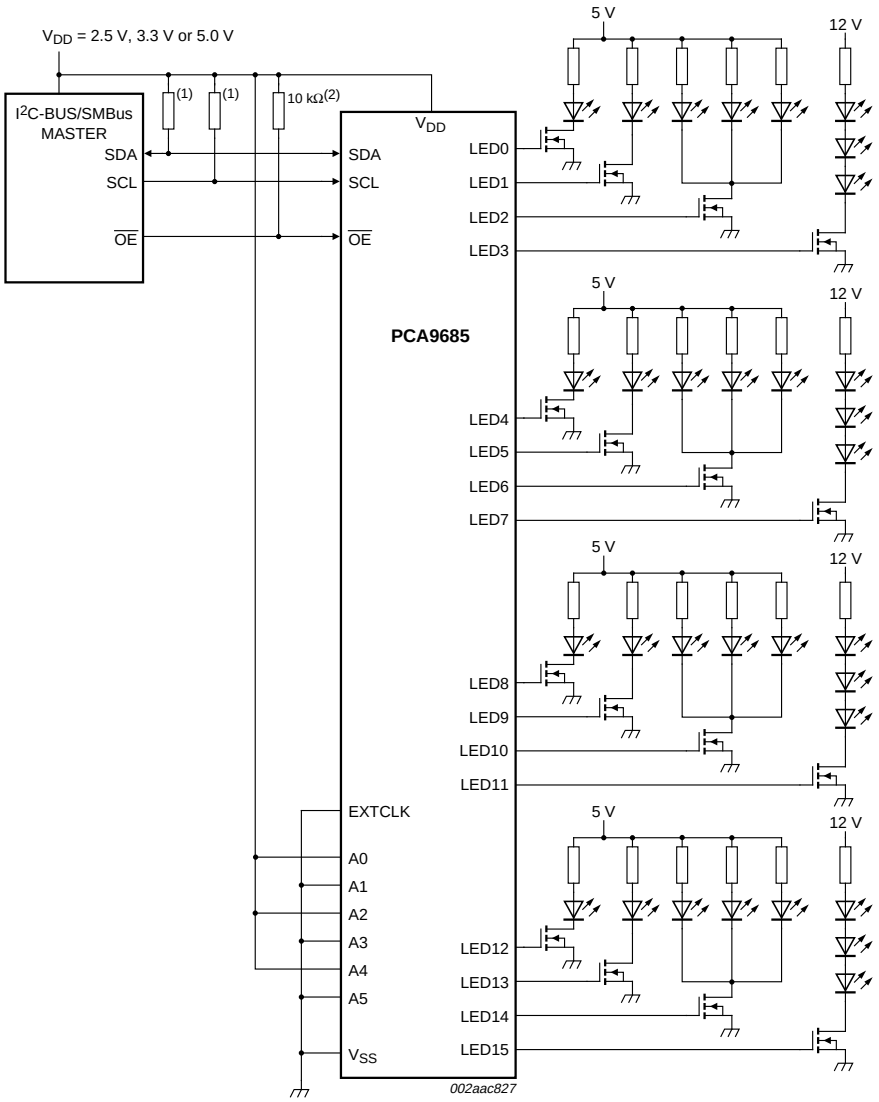

I²C-bus address = 1010 101x.

All 16 of the LEDn outputs configurable as either open-drain or totem pole. Mixing of configuration is not possible.

Remark: Set INVRT = 0, OUTDRV = 1, OUTNE = 01 (MODE2 register bits)

(1) Resistor value should be chosen by referencing section 7 of *UM10204, "I²C-bus specification and user manual"*.

(2) $\overline{OE}$ requires pull-up resistor if control signal from the master is open-drain.

Fig 26. Typical application

© NXP Semiconductors N.V. 2015. All rights reserved.

원문: PCA9685.pdf (media.ncd.io) · 제조사 원문 자료입니다. 사양은 제조사 사정에 따라 변경될 수 있습니다.

Question 1: What kind of edge rate control is there on the outputs?

- The typical edge rates depend on the output configuration, supply voltage, and the applied load. The outputs can be configured as either open-drain NMOS or totem pole outputs. If the customer is using the part to directly drive LEDs, they should be using it in an open-drain NMOS, if they are concerned about the maximum I_{SS} and ground bounce. The edge rate control was designed primarily to slow down the turn-on of the output device; it turns off rather quickly (~1.5 ns). In simulation, the typical turn-on time for the open-drain NMOS was ~14 ns (V_{DD} = 3.6 V; C_L = 50 pF; R_{PU} = 500 Ω).

Question 2: Is ground bounce possible?

- Ground bounce is a possibility, especially if all 16 outputs are changed at full current (25 mA each). There is a fair amount of decoupling capacitance on chip (~50 pF), which is intended to suppress some of the ground bounce. The customer will need to determine if additional decoupling capacitance externally placed as close as physically possible to the device is required.

Question 3: Can I really sink 400 mA through the single ground pin on the package and will this cause any ground bounce problem due to the PWM of the LEDs?

- Yes, you can sink 400 mA through a single ground pin on the **package**. Although the package only has one ground pin, there are two ground pads on the die itself connected to this one pin. Although some ground bounce is likely, it will not disrupt the operation of the part and would be reduced by the external decoupling capacitance.

Question 4: I can't turn the LEDs on or off, but their registers are set properly. Why?

- Check the MODE1 register SLEEP (bit 4) setting. The bit needs to be 0 in order to enable the clocking. If both clock sources (internal osc and EXTCLK) are turned OFF (bit 4 = 1), the LEDs cannot be dimmed or blinked.

Question 5: I'm using LEDs with integrated Zener diodes and the IC is getting very hot. Why?

- The IC outputs can be set to either open-drain or push-pull and default to push-pull outputs. In this application with the Zener diodes, they need to be set to open-drain since in the push-pull architecture there is a low resistance path to GND through the Zener and this is causing the IC to overheat.

 © NXP Semiconductors N.V. 2015. All rights reserved.

원문: PCA9685.pdf (media.ncd.io) · 제조사 원문 자료입니다. 사양은 제조사 사정에 따라 변경될 수 있습니다.

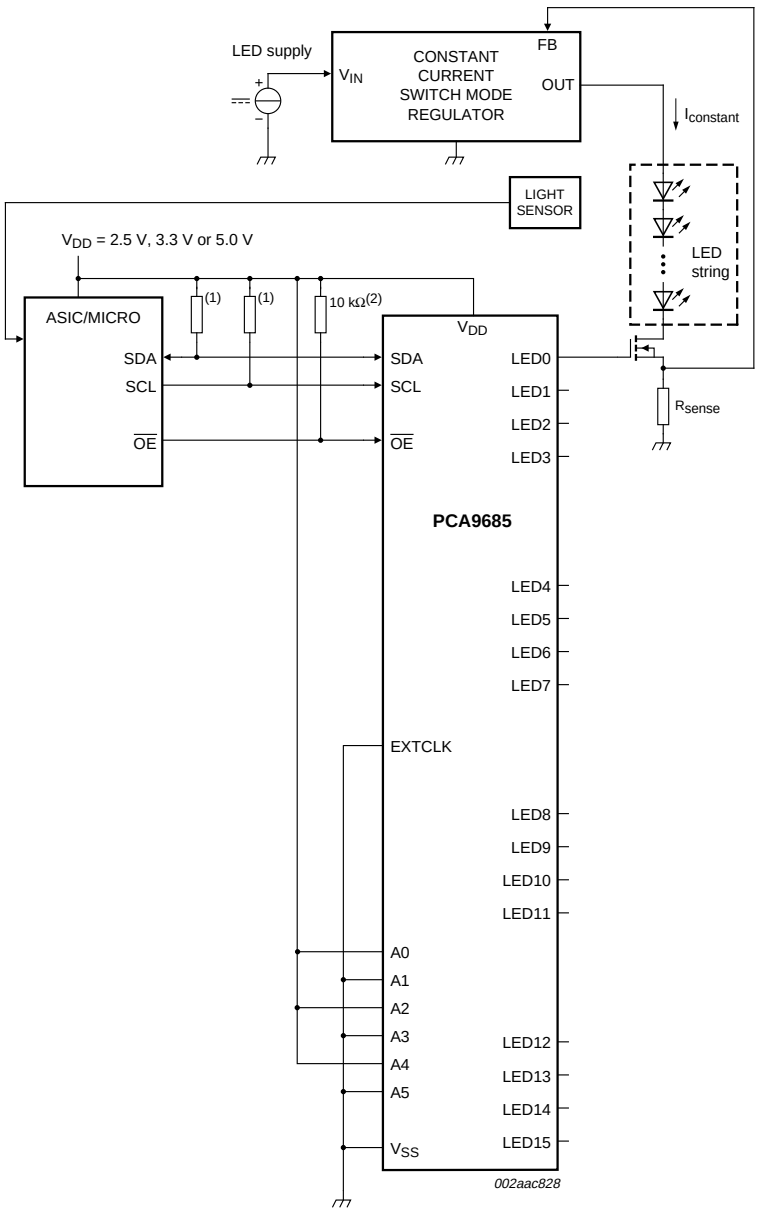

I²C-bus address = 1010 101x.

Remark: Set INVRT = 0, OUTDRV = 1, OUTNE = 01 (MODE2 register bits) for this configuration.

(1) Resistor value should be chosen by referencing Section 7 of *UM10204, "I²C-bus specification and user manual"*.

(2) $\overline{OE}$ requires pull-up resistor if control signal from the master is open-drain.

Fig 27. LCD backlighting application

원문: PCA9685.pdf (media.ncd.io) · 제조사 원문 자료입니다. 사양은 제조사 사정에 따라 변경될 수 있습니다.

11. Limiting values

Table 13. Limiting values
In accordance with the Absolute Maximum Rating System (IEC 60134).

Symbol	Parameter	Conditions	Min	Max	Unit
V_{DD}	supply voltage		–0.5	+6.0	V
$V_{I/O}$	voltage on an input/output pin		V_{SS} – 0.5	5.5	V
$I_{O(LEDn)}$	output current on pin LEDn		-	25	mA
I_{SS}	ground supply current		-	400	mA
P_{tot}	total power dissipation		-	400	mW
T_{stg}	storage temperature		–65	+150	°C
T_{amb}	ambient temperature	operating	–40	+85	°C

12. Static characteristics

Table 14. Static characteristics
V_{DD} = 2.3 V to 5.5 V; V_{SS} = 0 V; T_{amb} = –40 °C to +85 °C; unless otherwise specified.

Symbol	Parameter	Conditions	Min	Typ	Max	Unit
Supply						
V_{DD}	supply voltage		2.3	-	5.5	V
I_{DD}	supply current	operating mode; no load; f_{SCL} = 1 MHz; V_{DD} = 2.3 V to 5.5 V	-	6	10	mA
I_{stb}	standby current	no load; f_{SCL} = 0 Hz; V_I = V_{DD} or V_{SS}; V_{DD} = 2.3 V to 5.5 V	-	2.2	15.5	μA
V_{POR}	power-on reset voltage	no load; V_I = V_{DD} or V_{SS} [1]	-	1.70	2.0	V
Input SCL; input/output SDA						
V_{IL}	LOW-level input voltage		–0.5	-	+0.3V_{DD}	V
V_{IH}	HIGH-level input voltage		0.7V_{DD}	-	5.5	V
I_{OL}	LOW-level output current	V_{OL} = 0.4 V; V_{DD} = 2.3 V	20	28	-	mA
		V_{OL} = 0.4 V; V_{DD} = 5.0 V	30	40	-	mA
I_L	leakage current	V_I = V_{DD} or V_{SS}	–1	-	+1	μA
C_i	input capacitance	V_I = V_{SS}	-	6	10	pF
LED driver outputs						
I_{OL}	LOW-level output current	V_{OL} = 0.5 V; V_{DD} = 2.3 V to 4.5 V [2]	12	25	-	mA
$I_{OL(tot)}$	total LOW-level output current	V_{OL} = 0.5 V; V_{DD} = 4.5 V [2]	-	-	400	mA
I_{OH}	HIGH-level output current	open-drain; V_{OH} = V_{DD}	–10	-	+10	μA
V_{OH}	HIGH-level output voltage	I_{OH} = –10 mA; V_{DD} = 2.3 V	1.6	-	-	V
		I_{OH} = –10 mA; V_{DD} = 3.0 V	2.3	-	-	V
		I_{OH} = –10 mA; V_{DD} = 4.5 V	4.0	-	-	V
I_{OZ}	OFF-state output current	3-state; V_{OH} = V_{DD} or V_{SS}	–10	-	+10	μA
C_o	output capacitance		-	5	8	pF

 © NXP Semiconductors N.V. 2015. All rights reserved.

원문: PCA9685.pdf (media.ncd.io) · 제조사 원문 자료입니다. 사양은 제조사 사정에 따라 변경될 수 있습니다.

Table 14. Static characteristics *...continued*

V_{DD} = 2.3 V to 5.5 V; V_{SS} = 0 V; T_{amb} = −40 °C to +85 °C; unless otherwise specified.

Symbol	Parameter	Conditions	Min	Typ	Max	Unit
Address inputs; $\overline{OE}$ input; EXTCLK						
V_{IL}	LOW-level input voltage		−0.5	-	+0.3V_{DD}	V
V_{IH}	HIGH-level input voltage		0.7V_{DD}	-	5.5	V
I_{LI}	input leakage current		−1	-	+1	μA
C_i	input capacitance		-	3	5	pF

[1] V_{DD} must be lowered to 0.2 V in order to reset part.

[2] Each bit must be limited to a maximum of 25 mA and the total package limited to 400 mA due to internal busing limits.

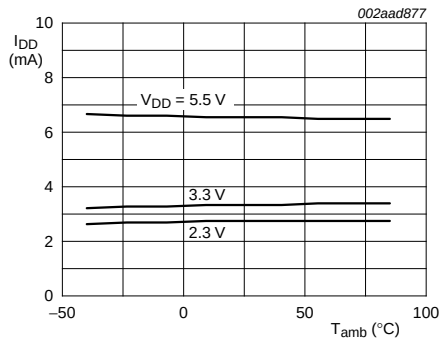

Fig 28. I_{DD} typical values with OSC on and f_{SCL} = 1 MHz versus temperature

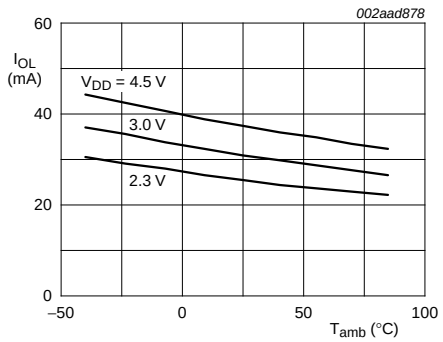

Fig 29. I_{OL} typical drive (LEDn outputs) versus temperature

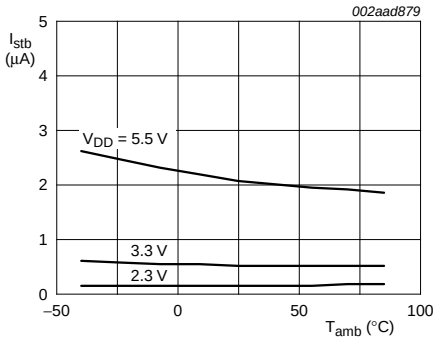

Fig 30. Standby supply current versus temperature

 © NXP Semiconductors N.V. 2015. All rights reserved.

원문: PCA9685.pdf (media.ncd.io) · 제조사 원문 자료입니다. 사양은 제조사 사정에 따라 변경될 수 있습니다.

13. Dynamic characteristics

Table 15. Dynamic characteristics

Symbol	Parameter	Conditions		Standard-mode I²C-bus		Fast-mode I²C-bus		Fast-mode Plus I²C-bus		Unit
				Min	Max	Min	Max	Min	Max	
f_{SCL}	SCL clock frequency		[1]	0	100	0	400	0	1000	kHz
f_{EXTCLK}	frequency on pin EXTCLK			DC	50	DC	50	DC	50	MHz
t_{BUF}	bus free time between a STOP and START condition			4.7	-	1.3	-	0.5	-	µs
$t_{HD;STA}$	hold time (repeated) START condition			4.0	-	0.6	-	0.26	-	µs
$t_{SU;STA}$	set-up time for a repeated START condition			4.7	-	0.6	-	0.26	-	µs
$t_{SU;STO}$	set-up time for STOP condition			4.0	-	0.6	-	0.26	-	µs
$t_{HD;DAT}$	data hold time			0	-	0	-	0	-	ns
$t_{VD;ACK}$	data valid acknowledge time		[2]	0.3	3.45	0.1	0.9	0.05	0.45	µs
$t_{VD;DAT}$	data valid time		[3]	0.3	3.45	0.1	0.9	0.05	0.45	µs
$t_{SU;DAT}$	data set-up time			250	-	100	-	50	-	ns
t_{LOW}	LOW period of the SCL clock			4.7	-	1.3	-	0.5	-	µs
t_{HIGH}	HIGH period of the SCL clock			4.0	-	0.6	-	0.26	-	µs
t_f	fall time of both SDA and SCL signals		[4][5]	-	300	$20 + 0.1C_b$ [6]	300	-	120	ns
t_r	rise time of both SDA and SCL signals			-	1000	$20 + 0.1C_b$ [6]	300	-	120	ns
t_{SP}	pulse width of spikes that must be suppressed by the input filter		[7]	-	50	-	50	-	50	ns
t_{PLZ}	LOW to OFF-state propagation delay	$\overline{OE}$ to LEDn; OUTNE[1:0] = 10 or 11 in MODE2 register		-	40	-	40	-	40	ns
t_{PZL}	OFF-state to LOW propagation delay	$\overline{OE}$ to LEDn; OUTNE[1:0] = 10 or 11 in MODE2 register		-	60	-	60	-	60	ns
t_{PHZ}	HIGH to OFF-state propagation delay	$\overline{OE}$ to LEDn; OUTNE[1:0] = 10 or 11 in MODE2 register		-	60	-	60	-	60	ns

All information provided in this document is subject to legal disclaimers.
© NXP Semiconductors N.V. 2015. All rights reserved.

원문: PCA9685.pdf (media.ncd.io) · 제조사 원문 자료입니다. 사양은 제조사 사정에 따라 변경될 수 있습니다.

Table 15. Dynamic characteristics *...continued*

Symbol	Parameter	Conditions	Standard-mode I²C-bus		Fast-mode I²C-bus		Fast-mode Plus I²C-bus		Unit
			Min	Max	Min	Max	Min	Max	
t_{PZH}	OFF-state to HIGH propagation delay	$\overline{OE}$ to LEDn; OUTNE[1:0] = 10 or 11 in MODE2 register	-	40	-	40	-	40	ns
t_{PLH}	LOW to HIGH propagation delay	$\overline{OE}$ to LEDn; OUTNE[1:0] = 01 in MODE2 register	-	40	-	40	-	40	ns
t_{PHL}	HIGH to LOW propagation delay	$\overline{OE}$ to LEDn; OUTNE[1:0] = 00 in MODE2 register	-	60	-	60	-	60	ns

[1] Minimum SCL clock frequency is limited by the bus time-out feature, which resets the serial bus interface if either SDA or SCL is held LOW for a minimum of 25 ms. Disable bus time-out feature for DC operation.

[2] $t_{VD;ACK}$ = time for Acknowledgement signal from SCL LOW to SDA (out) LOW.

[3] $t_{VD;DAT}$ = minimum time for SDA data out to be valid following SCL LOW.

[4] A master device must internally provide a hold time of at least 300 ns for the SDA signal (refer to the V_{IL} of the SCL signal) in order to bridge the undefined region of SCL's falling edge.

[5] The maximum t_f for the SDA and SCL bus lines is specified at 300 ns. The maximum fall time (t_f) for the SDA output stage is specified at 250 ns. This allows series protection resistors to be connected between the SDA and the SCL pins and the SDA/SCL bus lines without exceeding the maximum specified t_f.

[6] C_b = total capacitance of one bus line in pF.

[7] Input filters on the SDA and SCL inputs suppress noise spikes less than 50 ns.

All information provided in this document is subject to legal disclaimers.

© NXP Semiconductors N.V. 2015. All rights reserved.

원문: PCA9685.pdf (media.ncd.io) · 제조사 원문 자료입니다. 사양은 제조사 사정에 따라 변경될 수 있습니다.

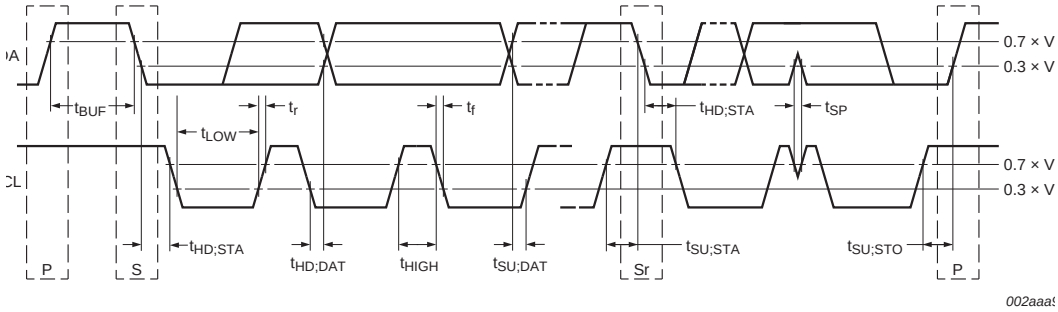

Fig 31. Definition of timing

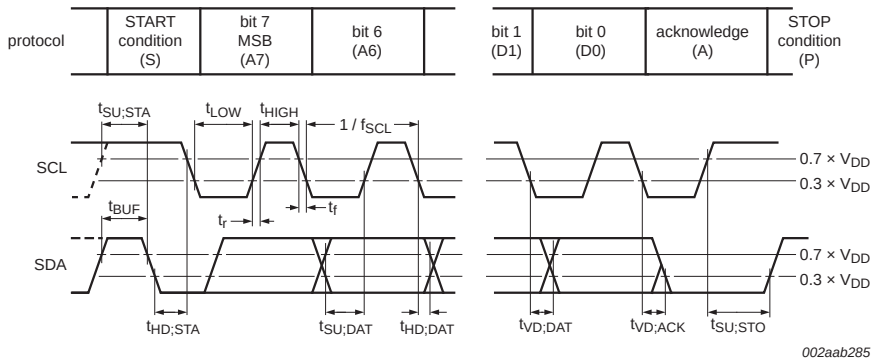

Rise and fall times refer to V_{IL} and V_{IH}.

Fig 32. I²C-bus timing diagram

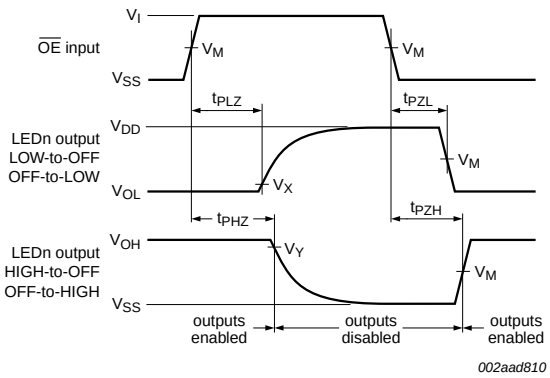

Fig 33. t_{PLZ}, t_{PZL} and t_{PHZ}, t_{PZH} times

원문: PCA9685.pdf (media.ncd.io) · 제조사 원문 자료입니다. 사양은 제조사 사정에 따라 변경될 수 있습니다.

14. Test information

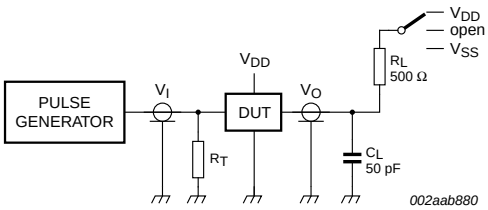

R_L = Load resistor for LEDn.

C_L = Load capacitance includes jig and probe capacitance.

R_T = Termination resistance should be equal to the output impedance Z_o of the pulse generators.

Fig 34. Test circuitry for switching times

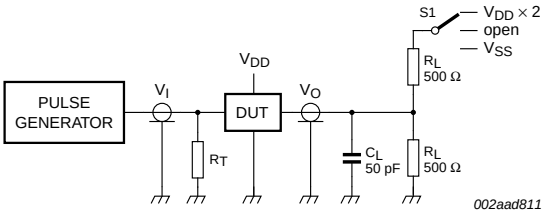

R_L = Load resistor for LEDn.

C_L = Load capacitance includes jig and probe capacitance.

R_T = Termination resistance should be equal to the output impedance Z_o of the pulse generators.

Test data are given in Table 16.

Fig 35. Test circuitry for switching times for enable/disable

Table 16. Test data for enable/disable switching times

Test	Load		Switch
	C_L	R_L	
t_{PD}	50 pF	500 Ω	open
t_{PLZ}, t_{PZL}	50 pF	500 Ω	$V_{DD} \times 2$
t_{PHZ}, t_{PZH}	50 pF	500 Ω	V_{SS}

All information provided in this document is subject to legal disclaimers.

© NXP Semiconductors N.V. 2015. All rights reserved.

원문: PCA9685.pdf (media.ncd.io) · 제조사 원문 자료입니다. 사양은 제조사 사정에 따라 변경될 수 있습니다.

we measure, we calibrate, we validate.
KOLAS 국제공인교정기관 · ISO/IEC 17025
㈜테솔 · www.tessol.com TS-TL-NCD-401 43 / 52

TS-TL-NCD-401

15. Package outline

TSSOP28: plastic thin shrink small outline package; 28 leads; body width 4.4 mm **SOT361-1**

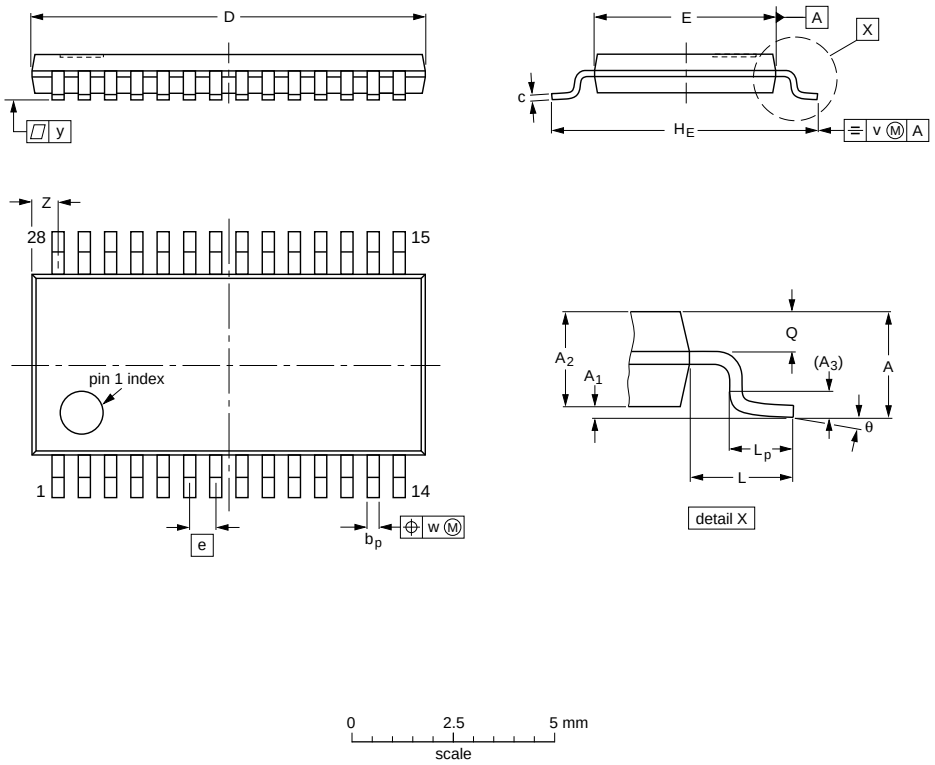

DIMENSIONS (mm are the original dimensions)

UNIT	A max.	A_1	A_2	A_3	b_p	c	D (1)	E (2)	e	H_E	L	L_p	Q	v	w	y	Z (1)	θ
mm	1.1	0.15 0.05	0.95 0.80	0.25	0.30 0.19	0.2 0.1	9.8 9.6	4.5 4.3	0.65	6.6 6.2	1	0.75 0.50	0.4 0.3	0.2	0.13	0.1	0.8 0.5	8° 0°

Notes

1. Plastic or metal protrusions of 0.15 mm maximum per side are not included.
2. Plastic interlead protrusions of 0.25 mm maximum per side are not included.

OUTLINE VERSION	REFERENCES				EUROPEAN PROJECTION	ISSUE DATE
	IEC	JEDEC	JEITA			
SOT361-1		MO-153				~~99-12-27~~ 03-02-19

Fig 36. Package outline SOT361-1 (TSSOP28)

 © NXP Semiconductors N.V. 2015. All rights reserved.

원문: PCA9685.pdf (media.ncd.io) · 제조사 원문 자료입니다. 사양은 제조사 사정에 따라 변경될 수 있습니다.

HVQFN28: plastic thermal enhanced very thin quad flat package; no leads; 28 terminals; body 6 x 6 x 0.85 mm **SOT788-1**

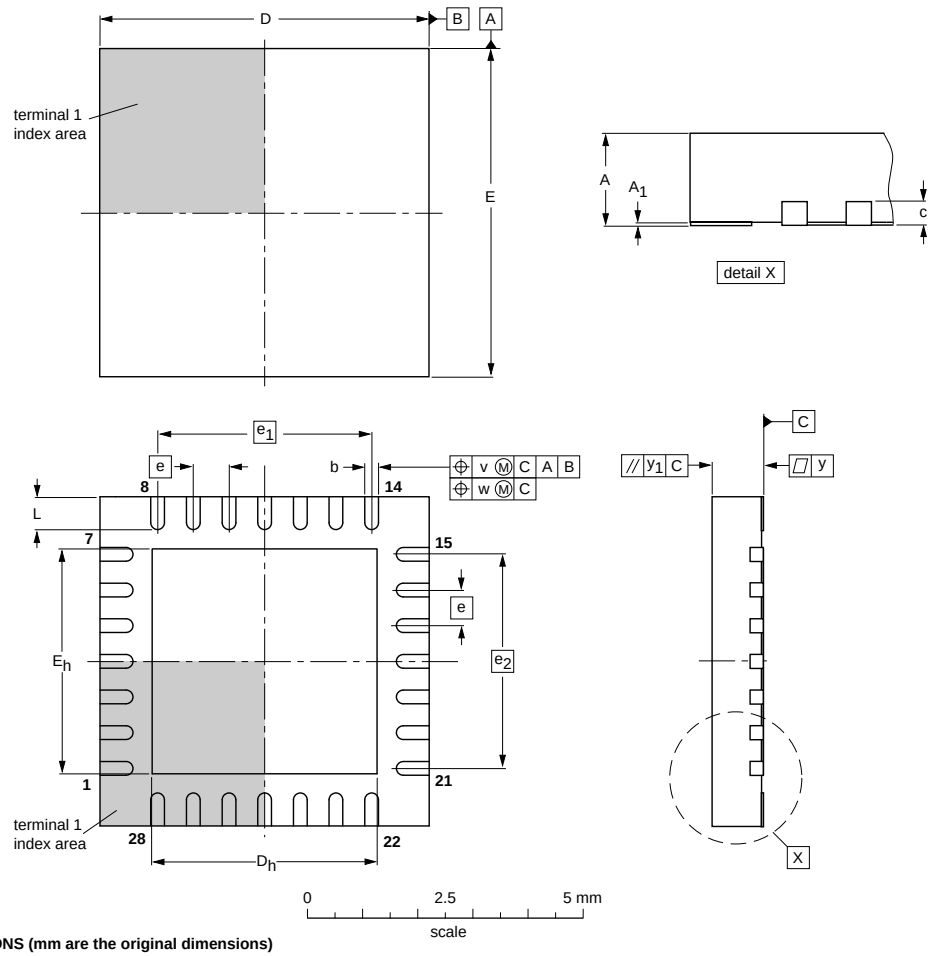

DIMENSIONS (mm are the original dimensions)

UNIT	A(1) max.	A_1	b	c	D(1)	D_h	E(1)	E_h	e	e_1	e_2	L	v	w	y	y_1
mm	1	0.05 0.00	0.35 0.25	0.2	6.1 5.9	4.25 3.95	6.1 5.9	4.25 3.95	0.65	3.9	3.9	0.75 0.50	0.1	0.05	0.05	0.1

Note

1. Plastic or metal protrusions of 0.075 mm maximum per side are not included.

OUTLINE VERSION	REFERENCES				EUROPEAN PROJECTION	ISSUE DATE
	IEC	JEDEC	JEITA			
SOT788-1	- - -	MO-220	- - -			02-10-22

Fig 37. Package outline SOT788-1 (HVQFN28)

 © NXP Semiconductors N.V. 2015. All rights reserved.

원문: PCA9685.pdf (media.ncd.io) · 제조사 원문 자료입니다. 사양은 제조사 사정에 따라 변경될 수 있습니다.

16. Handling information

All input and output pins are protected against ElectroStatic Discharge (ESD) under normal handling. When handling ensure that the appropriate precautions are taken as described in *JESD625-A* or equivalent standards.

17. Soldering of SMD packages

This text provides a very brief insight into a complex technology. A more in-depth account of soldering ICs can be found in Application Note *AN10365 "Surface mount reflow soldering description"*.

17.1 Introduction to soldering

Soldering is one of the most common methods through which packages are attached to Printed Circuit Boards (PCBs), to form electrical circuits. The soldered joint provides both the mechanical and the electrical connection. There is no single soldering method that is ideal for all IC packages. Wave soldering is often preferred when through-hole and Surface Mount Devices (SMDs) are mixed on one printed wiring board; however, it is not suitable for fine pitch SMDs. Reflow soldering is ideal for the small pitches and high densities that come with increased miniaturization.

17.2 Wave and reflow soldering

Wave soldering is a joining technology in which the joints are made by solder coming from a standing wave of liquid solder. The wave soldering process is suitable for the following:

- Through-hole components
- Leaded or leadless SMDs, which are glued to the surface of the printed circuit board

Not all SMDs can be wave soldered. Packages with solder balls, and some leadless packages which have solder lands underneath the body, cannot be wave soldered. Also, leaded SMDs with leads having a pitch smaller than ~0.6 mm cannot be wave soldered, due to an increased probability of bridging.

The reflow soldering process involves applying solder paste to a board, followed by component placement and exposure to a temperature profile. Leaded packages, packages with solder balls, and leadless packages are all reflow solderable.

Key characteristics in both wave and reflow soldering are:

- Board specifications, including the board finish, solder masks and vias
- Package footprints, including solder thieves and orientation
- The moisture sensitivity level of the packages
- Package placement
- Inspection and repair
- Lead-free soldering versus SnPb soldering

17.3 Wave soldering

Key characteristics in wave soldering are:

All information provided in this document is subject to legal disclaimers. © NXP Semiconductors N.V. 2015. All rights reserved.

원문: PCA9685.pdf (media.ncd.io) · 제조사 원문 자료입니다. 사양은 제조사 사정에 따라 변경될 수 있습니다.

TESSOL Technical Library

TS-TL-NCD-401

we measure, we calibrate, we validate.
㈜테솔 · www.tessol.com TS-TL-NCD-401 46 / 52
KOLAS 국제공인교정기관 · ISO/IEC 17025

- Process issues, such as application of adhesive and flux, clinching of leads, board transport, the solder wave parameters, and the time during which components are exposed to the wave
- Solder bath specifications, including temperature and impurities

17.4 Reflow soldering

Key characteristics in reflow soldering are:

- Lead-free versus SnPb soldering; note that a lead-free reflow process usually leads to higher minimum peak temperatures (see Figure 38) than a SnPb process, thus reducing the process window
- Solder paste printing issues including smearing, release, and adjusting the process window for a mix of large and small components on one board
- Reflow temperature profile; this profile includes preheat, reflow (in which the board is heated to the peak temperature) and cooling down. It is imperative that the peak temperature is high enough for the solder to make reliable solder joints (a solder paste characteristic). In addition, the peak temperature must be low enough that the packages and/or boards are not damaged. The peak temperature of the package depends on package thickness and volume and is classified in accordance with Table 17 and 18

Table 17. SnPb eutectic process (from J-STD-020D)

Package thickness (mm)	Package reflow temperature (°C)	
	Volume (mm³)	
	< 350	≥ 350
< 2.5	235	220
≥ 2.5	220	220

Table 18. Lead-free process (from J-STD-020D)

Package thickness (mm)	Package reflow temperature (°C)		
	Volume (mm³)		
	< 350	350 to 2000	> 2000
< 1.6	260	260	260
1.6 to 2.5	260	250	245
> 2.5	250	245	245

Moisture sensitivity precautions, as indicated on the packing, must be respected at all times.

Studies have shown that small packages reach higher temperatures during reflow soldering, see Figure 38.

 © NXP Semiconductors N.V. 2015. All rights reserved.

원문: PCA9685.pdf (media.ncd.io) · 제조사 원문 자료입니다. 사양은 제조사 사정에 따라 변경될 수 있습니다.

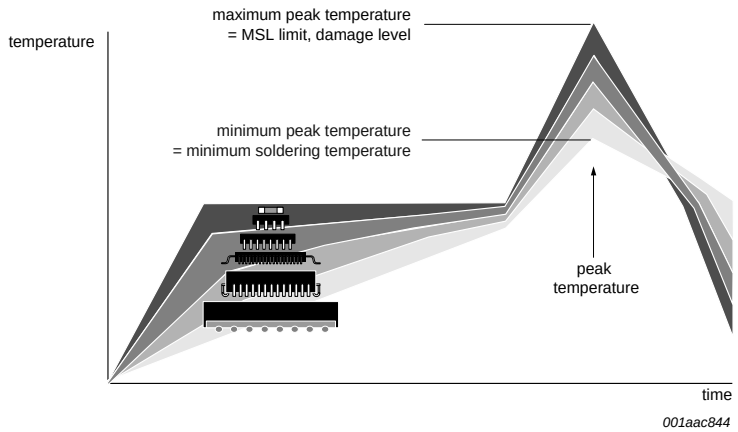

MSL: Moisture Sensitivity Level

Fig 38. Temperature profiles for large and small components

For further information on temperature profiles, refer to Application Note *AN10365 "Surface mount reflow soldering description"*.

18. Abbreviations

Table 19. Abbreviations

Acronym	Description
CDM	Charged-Device Model
DUT	Device Under Test
EMI	ElectroMagnetic Interference
ESD	ElectroStatic Discharge
HBM	Human Body Model
I²C-bus	Inter-Integrated Circuit bus
LCD	Liquid Crystal Display
LED	Light Emitting Diode
LSB	Least Significant Bit
MM	Machine Model
MSB	Most Significant Bit
NMOS	Negative-channel Metal-Oxide Semiconductor
PCB	Printed-Circuit Board
PMOS	Positive-channel Metal-Oxide Semiconductor
POR	Power-On Reset
PWM	Pulse Width Modulation; Pulse Width Modulator
RGB	Red/Green/Blue
RGBA	Red/Green/Blue/Amber
SMBus	System Management Bus

 © NXP Semiconductors N.V. 2015. All rights reserved.

원문: PCA9685.pdf (media.ncd.io) · 제조사 원문 자료입니다. 사양은 제조사 사정에 따라 변경될 수 있습니다.

19. Revision history

Table 20. Revision history

Document ID	Release date	Data sheet status	Change notice	Supersedes
PCA9685 v.4	20150416	Product data sheet	-	PCA9685 v.3
Modifications:	• Changed programmable frequency to “24 Hz to 1526 Hz” throughout • Minor edits to text and figures to provide clarity regarding cycle count throughout			
PCA9685 v.3	20100902	Product data sheet	-	PCA9685 v.2
PCA9685 v.2	20090716	Product data sheet	-	PCA9685 v.1
PCA9685 v.1	20080724	Product data sheet	-	-

 © NXP Semiconductors N.V. 2015. All rights reserved.

원문: PCA9685.pdf (media.ncd.io) · 제조사 원문 자료입니다. 사양은 제조사 사정에 따라 변경될 수 있습니다.

20. Legal information

20.1 Data sheet status

Document status[1][2]	Product status[3]	Definition
Objective [short] data sheet	Development	This document contains data from the objective specification for product development.
Preliminary [short] data sheet	Qualification	This document contains data from the preliminary specification.
Product [short] data sheet	Production	This document contains the product specification.

[1] Please consult the most recently issued document before initiating or completing a design.

[2] The term 'short data sheet' is explained in section "Definitions".

[3] The product status of device(s) described in this document may have changed since this document was published and may differ in case of multiple devices. The latest product status information is available on the Internet at URL http://www.nxp.com.

20.2 Definitions

Draft — The document is a draft version only. The content is still under internal review and subject to formal approval, which may result in modifications or additions. NXP Semiconductors does not give any representations or warranties as to the accuracy or completeness of information included herein and shall have no liability for the consequences of use of such information.

Short data sheet — A short data sheet is an extract from a full data sheet with the same product type number(s) and title. A short data sheet is intended for quick reference only and should not be relied upon to contain detailed and full information. For detailed and full information see the relevant full data sheet, which is available on request via the local NXP Semiconductors sales office. In case of any inconsistency or conflict with the short data sheet, the full data sheet shall prevail.

Product specification — The information and data provided in a Product data sheet shall define the specification of the product as agreed between NXP Semiconductors and its customer, unless NXP Semiconductors and customer have explicitly agreed otherwise in writing. In no event however, shall an agreement be valid in which the NXP Semiconductors product is deemed to offer functions and qualities beyond those described in the Product data sheet.

20.3 Disclaimers

Limited warranty and liability — Information in this document is believed to be accurate and reliable. However, NXP Semiconductors does not give any representations or warranties, expressed or implied, as to the accuracy or completeness of such information and shall have no liability for the consequences of use of such information. NXP Semiconductors takes no responsibility for the content in this document if provided by an information source outside of NXP Semiconductors.

In no event shall NXP Semiconductors be liable for any indirect, incidental, punitive, special or consequential damages (including - without limitation - lost profits, lost savings, business interruption, costs related to the removal or replacement of any products or rework charges) whether or not such damages are based on tort (including negligence), warranty, breach of contract or any other legal theory.

Notwithstanding any damages that customer might incur for any reason whatsoever, NXP Semiconductors' aggregate and cumulative liability towards customer for the products described herein shall be limited in accordance with the *Terms and conditions of commercial sale* of NXP Semiconductors.

Right to make changes — NXP Semiconductors reserves the right to make changes to information published in this document, including without limitation specifications and product descriptions, at any time and without notice. This document supersedes and replaces all information supplied prior to the publication hereof.

Suitability for use — NXP Semiconductors products are not designed, authorized or warranted to be suitable for use in life support, life-critical or safety-critical systems or equipment, nor in applications where failure or malfunction of an NXP Semiconductors product can reasonably be expected to result in personal injury, death or severe property or environmental damage. NXP Semiconductors and its suppliers accept no liability for inclusion and/or use of NXP Semiconductors products in such equipment or applications and therefore such inclusion and/or use is at the customer's own risk.

Applications — Applications that are described herein for any of these products are for illustrative purposes only. NXP Semiconductors makes no representation or warranty that such applications will be suitable for the specified use without further testing or modification.

Customers are responsible for the design and operation of their applications and products using NXP Semiconductors products, and NXP Semiconductors accepts no liability for any assistance with applications or customer product design. It is customer's sole responsibility to determine whether the NXP Semiconductors product is suitable and fit for the customer's applications and products planned, as well as for the planned application and use of customer's third party customer(s). Customers should provide appropriate design and operating safeguards to minimize the risks associated with their applications and products.

NXP Semiconductors does not accept any liability related to any default, damage, costs or problem which is based on any weakness or default in the customer's applications or products, or the application or use by customer's third party customer(s). Customer is responsible for doing all necessary testing for the customer's applications and products using NXP Semiconductors products in order to avoid a default of the applications and the products or of the application or use by customer's third party customer(s). NXP does not accept any liability in this respect.

Limiting values — Stress above one or more limiting values (as defined in the Absolute Maximum Ratings System of IEC 60134) will cause permanent damage to the device. Limiting values are stress ratings only and (proper) operation of the device at these or any other conditions above those given in the Recommended operating conditions section (if present) or the Characteristics sections of this document is not warranted. Constant or repeated exposure to limiting values will permanently and irreversibly affect the quality and reliability of the device.

Terms and conditions of commercial sale — NXP Semiconductors products are sold subject to the general terms and conditions of commercial sale, as published at http://www.nxp.com/profile/terms, unless otherwise agreed in a valid written individual agreement. In case an individual agreement is concluded only the terms and conditions of the respective agreement shall apply. NXP Semiconductors hereby expressly objects to applying the customer's general terms and conditions with regard to the purchase of NXP Semiconductors products by customer.

No offer to sell or license — Nothing in this document may be interpreted or construed as an offer to sell products that is open for acceptance or the grant, conveyance or implication of any license under any copyrights, patents or other industrial or intellectual property rights.

 © NXP Semiconductors N.V. 2015. All rights reserved.

원문: PCA9685.pdf (media.ncd.io) · 제조사 원문 자료입니다. 사양은 제조사 사정에 따라 변경될 수 있습니다.

Export control — This document as well as the item(s) described herein may be subject to export control regulations. Export might require a prior authorization from competent authorities.

Non-automotive qualified products — Unless this data sheet expressly states that this specific NXP Semiconductors product is automotive qualified, the product is not suitable for automotive use. It is neither qualified nor tested in accordance with automotive testing or application requirements. NXP Semiconductors accepts no liability for inclusion and/or use of non-automotive qualified products in automotive equipment or applications.

In the event that customer uses the product for design-in and use in automotive applications to automotive specifications and standards, customer (a) shall use the product without NXP Semiconductors' warranty of the product for such automotive applications, use and specifications, and (b) whenever customer uses the product for automotive applications beyond NXP Semiconductors' specifications such use shall be solely at customer's own risk, and (c) customer fully indemnifies NXP Semiconductors for any liability, damages or failed product claims resulting from customer design and use of the product for automotive applications beyond NXP Semiconductors' standard warranty and NXP Semiconductors' product specifications.

Translations — A non-English (translated) version of a document is for reference only. The English version shall prevail in case of any discrepancy between the translated and English versions.

20.4 Trademarks

Notice: All referenced brands, product names, service names and trademarks are the property of their respective owners.

21. Contact information

For more information, please visit: **http://www.nxp.com**

For sales office addresses, please send an email to: **salesaddresses@nxp.com**

 © NXP Semiconductors N.V. 2015. All rights reserved.

원문: PCA9685.pdf (media.ncd.io) · 제조사 원문 자료입니다. 사양은 제조사 사정에 따라 변경될 수 있습니다.

22. Contents

1 General description . . . 1
2 Features and benefits . . . 2
3 Applications . . . 3
4 Ordering information . . . 4
4.1 Ordering options . . . 4
5 Block diagram . . . 5
6 Pinning information . . . 6
6.1 Pinning . . . 6
6.2 Pin description . . . 6
7 Functional description . . . 7
7.1 Device addresses . . . 7
7.1.1 Regular I²C-bus slave address . . . 7
7.1.2 LED All Call I²C-bus address . . . 8
7.1.3 LED Sub Call I²C-bus addresses . . . 8
7.1.4 Software Reset I²C-bus address . . . 9
7.2 Control register . . . 9
7.3 Register definitions . . . 10
7.3.1 Mode register 1, MODE1 . . . 14
7.3.1.1 Restart mode . . . 15
7.3.2 Mode register 2, MODE2 . . . 16
7.3.3 LED output and PWM control . . . 16
7.3.4 ALL_LED_ON and ALL_LED_OFF control . . . 25
7.3.5 PWM frequency PRE_SCALE . . . 25
7.3.6 SUBADR1 to SUBADR3, I²C-bus subaddress 1 to 3 . . . 26
7.3.7 ALLCALLADR, LED All Call I²C-bus address . . . 26
7.4 Active LOW output enable input . . . 27
7.5 Power-on reset . . . 27
7.6 Software reset . . . 28
7.7 Using the PCA9685 with and without external drivers . . . 29
8 Characteristics of the I²C-bus . . . 30
8.1 Bit transfer . . . 30
8.1.1 START and STOP conditions . . . 30
8.2 System configuration . . . 30
8.3 Acknowledge . . . 31
9 Bus transactions . . . 32
10 Application design-in information . . . 35
11 Limiting values . . . 38
12 Static characteristics . . . 38
13 Dynamic characteristics . . . 40
14 Test information . . . 43
15 Package outline . . . 44
16 Handling information . . . 46
17 Soldering of SMD packages . . . 46
17.1 Introduction to soldering . . . 46
17.2 Wave and reflow soldering . . . 46
17.3 Wave soldering . . . 46
17.4 Reflow soldering . . . 47
18 Abbreviations . . . 48
19 Revision history . . . 49
20 Legal information . . . 50
20.1 Data sheet status . . . 50
20.2 Definitions . . . 50
20.3 Disclaimers . . . 50
20.4 Trademarks . . . 51
21 Contact information . . . 51
22 Contents . . . 52

Please be aware that important notices concerning this document and the product(s) described herein, have been included in section 'Legal information'.

© NXP Semiconductors N.V. 2015. All rights reserved.

For more information, please visit: http://www.nxp.com
For sales office addresses, please send an email to: salesaddresses@nxp.com

Date of release: 16 April 2015
Document identifier: PCA9685

원문: PCA9685.pdf (media.ncd.io) · 제조사 원문 자료입니다. 사양은 제조사 사정에 따라 변경될 수 있습니다.