Quick Start Guide

ZR1x/ZR2x

Wireless

Single / Dual Relay Controllers

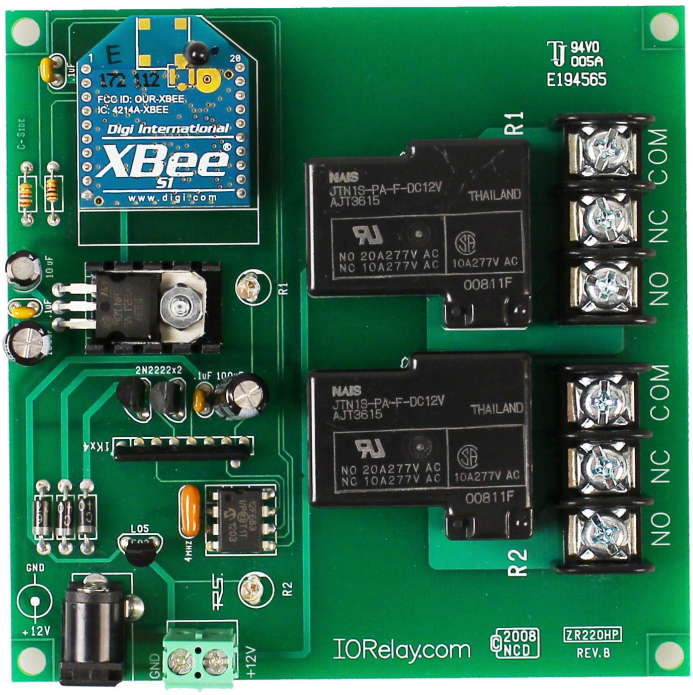

Copyright © 2012
National Control Devices

All Rights Reserved.

NOTICE: Portions of this Manual REQUIRE Internet Access

원문: 제품 설명서 (media.ncd.io) · 제조사 원문 자료입니다. 사양은 제조사 사정에 따라 변경될 수 있습니다.

Table of Contents

Introduction 3

Power Supply Requirements 4

Connecting Relays 5

Base Station Software 6

Sending Command to R2 7

ASCII Codes vs. Characters 8

Using Zigbee Single/Dual Controllers

- Turn Off Relay 1 9
- Turn On Relay 1 9
- Turn Off Relay 2 9
- Turn On Relay 2 10
- Get Relay 1 Status 10
- Get Relay 2 Status 10
- Set Status of Both Relays 11
- Get Status of Both Relays 11
- Store Relay Status as Power-up Default 12
- Retrieve Start-up Default State of Relays 12

Technical Support 13

원문: 제품 설명서 (media.ncd.io) · 제조사 원문 자료입니다. 사양은 제조사 사정에 따라 변경될 수 있습니다.

Introduction

NCD Single and Dual Channel Relay Controllers were designed to service the needs of computer controlled switching applications using RS-232 direct wired communications or ZigBee Wireless Communications. Available in SPST, SPDT, and DPDT Relay Configurations, NCD offers the most versatile line of low-cost relay controllers in the world.

ZigBee Versions:
The ZigBee version requires no-more than 250ma to power the microprocessor and wireless components. Each relay that is activated will impose no more than 80ma additional current draw. ZigBee versions can draw up to 410ma MAX when both relays are activated. Actual current may very depending on model, but will not exceed these current requirements. Voltage should not exceed automotive application voltages (13.8VDC). Low voltages (below 10VDC) may allow CPU to function, but the on-board relays may not activate. A 12VDC power supply with a 2.1mm Center Positive Barrel Connector is required to power this device. Integrated LEDs will light when a relay is activated.

ZigBee versions require a ZigBee Modem. This wireless modem mounts as a COM port on your computer, making it act like a real serial port. This ensures easy software development. Communications to the ZigBee Modem are fixed at 115.2K Baud, 8 Data Bits, 1 Stop Bit, No Parity, and No Flow Control. ZigBee devices respond with ASCII Character Code 85 to acknowledge the receipt of all wireless commands. The E3C command set found in this manual applies to RS-232 devices ONLY. These commands have no function on ZigBee devices.

ZigBee Wireless Range
Depending on the version purchased, supported wireless communication range can be up to 300 feet (max 1mw versions) or up to 1 Mile (max 60mw versions). Actual range will depend on terrain, obstructions, electrical noise, and relative humidity.

ZigBee Networking
It is possible to communicate to multiple ZigBee relay controllers using the ZigBee communications protocol. The ZigBee protocol is extensive, and should be researched independently of this manual, as this manual only focuses on commands to talk to ZigBee relay devices. ZigBee networking is accomplished using standard ZigBee commands. The ZigBee command set is an international standard, and was not
developed by National Control Devices, and will not be detailed in this product manual.

SignalSwitch Compatibility
All ZigBee Wireless Versions of this device are compatible with www.signalswitch.com, which allows you to control these devices from anywhere in the world using a free account with a user-customized interface. A dedicated computer is required to process commands from www.signalswitch.com. The computer is used to communicate data from www.signalswitch.com to the relay controller using a standard COM port. Listener software (provided by www.signalswitch.com) serves as the software link between the device and www.signalswitch.com. Listener software MUST BE CONFIGURED for 115.2K Baud for proper operation.

원문: 제품 설명서 (media.ncd.io) · 제조사 원문 자료입니다. 사양은 제조사 사정에 따라 변경될 수 있습니다.

Power Supply Requirements

1. Do NOT use a wall wart type unregulated power supply.
2. Use only a computer grade regulated power supply rated at 12 Volts DC, 200ma or greater.
3. Use a supply rated for more amperage when powering multiple boards.
4. This device is compatible with automotive electrical systems.
5. DC power should never travel greater than 20 foot distances. A separate power supply should be used for each controller if controllers are not located with 20 feet of each other.

원문: 제품 설명서 (media.ncd.io) · 제조사 원문 자료입니다. 사양은 제조사 사정에 따라 변경될 수 있습니다.

Connecting Relays

Connector Pin outs for 1-Amp DPDT Series Controllers

Any time you see one of our relay controllers with a green 12-Position terminal block and small white relays labeled AX-ICOM on the board, you can assume the wiring connections shown to the right will always apply. Always view the connector from the angle shown in the picture to the right. This will ensure connections are consistently made to 1A DPDT series controllers.

A DPDT relay has two separate switches inside each relay. These switches are labeled Switch A and Switch B in the diagram at right. Switches A and B are completely separated from each other, there is no electrical connection between these switches. When a DPDT relay is activated, both switches A and B "activate" or more appropriately change position at the same time. In the diagram at right, each connection is labeled NO, NC and COM.

COM: Common
This terminal is connected to NC when relay is off.
This terminal swings over to NO when the relay is on.

NO: Normally Open
This terminal has no connection with the relay is off.
This terminal is connected to COM when the relay is on.

NC: Normally Close
This terminal is connected to COM when the relay is off.
This terminal has no connection with the relay is on.

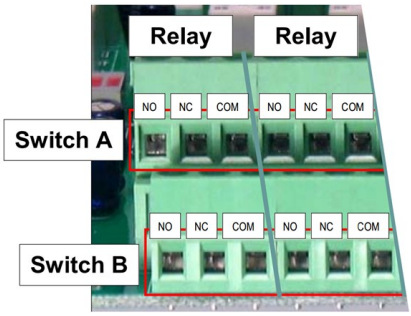

Connector Pin outs for 3-Amp and 5-Amp DPDT Series Controllers

Any time you see one of our relay controllers with a green 12-Position terminal block and black relays on the board, you can assume the wiring connections shown to the right will always apply. Always view the connector from the angle shown in the picture to the right. This will ensure connections are consistently made to 3A and 5A DPDT series controllers.

A DPDT relay has two separate switches inside each relay. These switches are labeled Switch A and Switch B in the diagram at right. Switches A and B are completely separated from each other, there is no electrical connection between these switches. When a DPDT relay is activated, both switches A and B "activate" or more appropriately change position at the same time. In the diagram at right, each connection is labeled NO, NC and COM.

COM: Common
This terminal is connected to NC when relay is off.
This terminal swings over to NO when the relay is on.

NO: Normally Open
This terminal has no connection with the relay is off.
This terminal is connected to COM when the relay is on.

NC: Normally Close
This terminal is connected to COM when the relay is off.
This terminal has no connection with the relay is on.

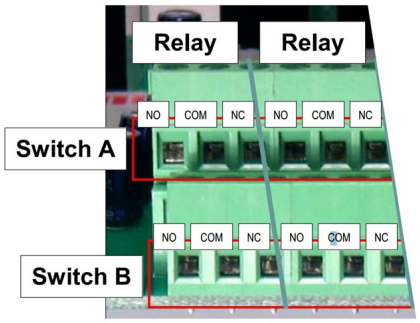

원문: 제품 설명서 (media.ncd.io) · 제조사 원문 자료입니다. 사양은 제조사 사정에 따라 변경될 수 있습니다.

Base Station Software

You will now need to download and install NCD Base Station Software. Base Station Software allows you to communicate with and test your device. When Base Station Software runs on your Windows computer, the software will identify the type of controller and will build a list of command sets that are compatible with your controller. Below are the basic parts to the main Base software application:

1. **Identification and Documentation**: This button displays Read-Only information stored in the controller. It can help you identify the type of device that is connected and what its capabilities are. This portion of the software also builds a library of documents that will be helpful in using the controller it has identified. This library of documents will change depending on the type of device which has been identified.

2. **COMM Operator**: COMM Operator is a tool for testing and learning how to communicate with all Network and COM based devices. This manual may include command codes you can send to the device using COMM Operator. COMM Operator should be thought of as a terminal to send and receive bytes of data. COMM Operator was used extensively in the development of this device and should be referenced throughout the learning process. COMM Operator is a commercial product and is NOT Free. The 30-Day Evaluation version is provided and users may purchase a license for this software if they would like to continue use beyond 30 days.

3. **Device Command Sets**: Each Device contains a set of commands that are identified by the Base Station software. Choose the command set you would like to explore in this box. Click one time on the command set you would like to explore.

Note: There may be more basic features depending on your device. Other features you may notice:

- **Device Configuration**: This button allows you to modify important device settings to help improve communication speed, functionality, and timing parameters of the device. Device Configuration is rarely used by the user

- **Display Command Set**: When working with Base software, many windows will display the actual command codes used to trigger a particular function. This option allows you to choose Decimal and Hex formats. This manual is shown in both Hex and Decimal format. Decimal is typically used in COMM Operator and is our preferred format, but Hex works great too.

- **Run Mode**: Run mode is used for daily operations and is the default mode of operation. To prevent accidental writes to non-volatile memory, the device must be placed in Configuration Mode to change EEPROM memory. Click this button anytime you need to change modes. Note that a jumper on the controller will force this device into Configuration mode. If a device is powered up in Configuration Mode and you are using a Web-i interface, the Web-i will boot in DHCP mode as a safeguard in case the device becomes inaccessible with a static IP address.

원문: 제품 설명서 (media.ncd.io) · 제조사 원문 자료입니다. 사양은 제조사 사정에 따라 변경될 수 있습니다.

Sending Commands to the R2

A terminal program is not suitable for controlling this device. Commands should be sent using ASCII character codes 0-255 rather than ASCII characters (A, B, C, 1, 2, 3, 4, etc.). See “ASCII Codes vs. Characters” on this page. Note that ASCII character codes are used for commanding the CLCD while actual ASCII characters are used to send text to the display.

Most systems require you to open the appropriate serial port (COM port) prior to sending or receive data.

Because there are so many different ways to send and receive data from various languages on various platforms, we will provide generic instructions that can be easily converted to your favorite language.

For example, if this manual says “Send ASCII 254”, the user will need to translate this instruction into a command that is capable of sending ASCII character code 254.

To Send ASCII 254 from Visual Basic, you will use the following line:

MSComm1.Output = Chr$(254)

In Qbasic, you can send ASCII 254 using the following line of code:

Print #1, Chr$(254);

Note that sending ASCII character code 254 is NOT the same as sending ASCII characters 2, 5, and 4 from a terminal program. Typing 2, 5, and 4 on the keyboard will transmit three ASCII character codes.

For your convenience, we have provided programming examples for Visual Basic 6. The provided examples should greatly speed development time. You may want to visit www.controlanything.com for the latest software and programming examples.

Programming examples for this device are much more extensive for Visual Basic 6 users than for any other programming language. If you are not a VB programmer, you may consider looking at the VB6 source code, as it is easily translated into other popular languages.

Regardless of your programming background, the provided Visual Basic 6 source code is very easy to understand and will likely resolve any communication questions you may have. VB6 programming examples may be viewed in any text editor such as Notepad or WordPad.

원문: 제품 설명서 (media.ncd.io) · 제조사 원문 자료입니다. 사양은 제조사 사정에 따라 변경될 수 있습니다.

ASCII Codes vs. Characters

The differences between ASCII codes and ASCII characters tend to generate a lot of confusion among first-time RS-232 programmers. It is important to understand that a computer only works with numbers. With regard to RS-232 data, the computer is only capable of sending and receiving numbers from 0 to 255.

What confuses people is the simple idea that the numbers 0 to 255 are assigned letters. For instance, the number 65 represents the letter A. The number 66 represents the letter B. Every character (including numbers and punctuation) is assigned a numeric value. This standard of assignments is called ASCII, and is a universal standard adopted by all computers with an RS-232 serial port. ASCII characters codes can be clearly defined as numbers from 0 to 255.

ASCII characters however are best defined as letters, A, B, C, D, as well as punctuation, !@#$%, and even the numbers 0-9. Virtually all programming languages permit you to send ASCII in the form of letters or numbers. If you wanted to send the word “Hello” out the serial port, it is much easier to send the letters H, e, l, l, and o than it is to send the ASCII character codes that represent each letter.

For the purposes of controlling NCD devices however, it is much easier to build a numeric command set. Especially when communicating to devices that have numeric parameters, such as the E3C command set. Put simply, it is easier to control NCD devices using ASCII character codes 0 to 255 than it is to use ASCII characters A, B, C, D, etc.

Because terminal programs are ASCII character based, it may be difficult to generate the proper series of keystrokes that would be necessary to activate a particular function. Therefore, terminal programs are not suitable for controlling NCD devices. In a real world control application, a terminal program would not likely be used to control NCD devices anyway. Therefore, a programming language that supports the transmission and reception of ASCII character codes 0 to 255 is highly recommended.

원문: 제품 설명서 (media.ncd.io) · 제조사 원문 자료입니다. 사양은 제조사 사정에 따라 변경될 수 있습니다.

Using Zigbee Single/Dual Relay Controllers

Note: Commands sent to Zigbee Wireless Devices are communicated to the Remote Zigbee Device using a Zigbee Modem. The Zigbee Modem mounts as a COM Port on your computer. Send All commands to the Zigbee Modem at 115.2K Baud, 8 Data Bits, 1 Stop Bit, No Parity, No flow control. *When talking to multiple devices consult your "Digi Development Kit".*

254, 0: Turn Off Relay 1

Turns off Relay 1; This command will return ASCII Character Code 85 to confirm receipt of this command.

Send Bytes:	**Byte 1:**	**Byte 2:**
Function:	Command	Command
Decimal Values:	254	0
Hex Values	0xFE	0x00

Receive Byte: Decimal: 85
Hex: 0x55

Sample Code: Relay One Off

```
MSComm1 . Output = Chr$(254)    'Enter Command Mode
MSComm1 . Output = Chr$(0)      'Turn Off Relay 1
Get Data                        'Wait for Device to Reply
```

254, 1: Turn On Relay 1

Turns on Relay 1; This command will return ASCII Character Code 85 to confirm the receipt of this command.

Send Bytes:	**Byte 1:**	**Byte 2:**
Function:	Command	Command
Decimal Values:	254	1
Hex Values	0xFE	0x01

Receive Byte: Decimal: 85
Hex: 0x55

Sample Code: Relay One On

```
MSComm1 . Output = Chr$(254)    'Enter Command Mode
MSComm1 . Output = Chr$(1)      'Turn On Relay 1
Get Data                        'Wait for Device to Reply
```

254, 2: Turn Off Relay 2

Turns off Relay 2; This command will return ASCII Character Code 85 to confirm the receipt of this command.

Send Bytes:	**Byte 1:**	**Byte 2:**
Function:	Command	Command
Decimal Values:	254	2
Hex Values	0xFE	0x02

Receive Byte: Decimal: 85
Hex: 0x55

Sample Code: Relay Two Off

```
MSComm1 . Output = Chr$(254)    'Enter Command Mode
MSComm1 . Output = Chr$(2)      'Turn Off Relay 2
Get Data                        'Wait for Device to Reply
```


원문: 제품 설명서 (media.ncd.io) · 제조사 원문 자료입니다. 사양은 제조사 사정에 따라 변경될 수 있습니다.

Using Zigbee Single/Dual Relay Controllers

254, 3: Turn On Relay 2
Turns on Relay 2; This command will return ASCII Character Code 85 to confirm receipt of this command.

Send Bytes:	**Byte 1:**	**Byte 2:**
Function:	Command	Command
Decimal Values:	254	3
Hex Values	0xFE	0x03

Receive Byte: Decimal: 85
Hex: 0x55

Sample Code: Relay Two ON

```
MSComm1 . Output = Chr$(254)    'Enter Command Mode
MSComm1 . Output = Chr$(3)      'Turn On Relay 2
Get Data                        'Wait for Device to Reply
```

254, 4: Get Relay 1 Status
This command reports back 0 or 1 indicating the status of Relay 1. 0=Off, 1=On.

Send Bytes:	**Byte 1:**	**Byte 2:**
Function:	Command	Command
Decimal Values:	254	4
Hex Values	0xFE	0x04

Receive Byte: Decimal: 0 or 1
Hex: 0x00 or 0x01

Sample Code: Relay One Status

```
MSComm1 . Output = Chr$(254)    'Enter Command Mode
MSComm1 . Output = Chr$(4)      'Ask for Status of Relay 1
Do                              'Wait for Device to Reply
        DoEvents                'Allow Windows to Multitask
Until MSComm1. InBufferCount>0  'If the Device Replies
RelayOneStatus=ASC(MSComm1.Input)  'Get Status of Relay 1
```

254, 5: Get Relay 2 Status
This command reports back 0 or 1 indicating the status of Relay 1. 0=Off, 1=On.

Send Bytes:	**Byte 1:**	**Byte 2:**
Function:	Command	Command
Decimal Values:	254	5
Hex Values	0xFE	0x05

Receive Byte: Decimal: 0 or 1
Hex: 0x00 or 0x01

Sample Code: Relay Two Status

```
MSComm1 . Output = Chr$(254)    'Enter Command Mode
MSComm1 . Output = Chr$(5)      'Ask for Status of Relay 2
Do                              'Wait for Device to Reply
        DoEvents                'Allow Windows to Multitask
Until MSComm1. InBufferCount>0  'If the Device Replies
RelayOneStatus=ASC(MSComm1.Input)  'Get Status of Relay 2
```

원문: 제품 설명서 (media.ncd.io) · 제조사 원문 자료입니다. 사양은 제조사 사정에 따라 변경될 수 있습니다.

Using Zigbee Single/Dual Relay Controllers

254, 6: Set Status of Both Relays

This command sets the status of BOTH relays at one time. This command requires a parameter of 0-3:
Parameter 0: Turn Off Both Relays
Parameter 1: Turn On Relay 1, Turn Off Relay 2
Parameter 2: Turn On Relay 2, Turn Off Relay 1
Parameter 3: Turn On Both Relays
This command will return ASCII Character Code 85 to confirm the receipt of this command.

Send Bytes:	**Byte 1:**	**Byte 2:**	**Byte 3:**
Function:	Command	Command	Parameter
Decimal Values:	254	6	0 - 3
Hex Values	0xFE	0x06	0x00 - 0x03

Receive Byte: Decimal: 85
Hex: 0x55

Sample Code: Set Both Relays

```
MSComm1 . Output = Chr$(254)      'Enter Command Mode
MSComm1 . Output = Chr$(6)        'Set Both Relays Command
MSComm1 . Output = Chr$(Status)   'Set Status of Both Relays
Get Data                          'Wait for Device to Reply
```

254, 7: Get Status of Both Relays

This command reports the On/Off status of both relays. This command will send a byte from 0 to 3 back to the user indicating the status of both relays:
Return Byte 0: Both Relays are Off
Return Byte 1: Relay 1 is On, Relay 2 is Off
Return Byte 2: Relay 2 is On, Relay 1 is Off
Return Byte 3: Both Relays are On

Send Bytes:	**Byte 1:**	**Byte 2:**
Function:	Command	Command
Decimal Values:	254	7
Hex Values	0xFE	0x07

Receive Byte: Decimal: 0 - 3
Hex: 0x00 - 0x03

Sample Code: Get Both Relay Status

```
MSComm1 . Output = Chr$(254)      'Enter Command Mode
MSComm1 . Output = Chr$(7)        'Ask for Status of Both Relays
Do                                'Wait for Device to Reply
        DoEvents                  'Allow Windows to Multitask
Until MSComm1. InBufferCount>0    'If the Device Replies
GetBothRelayStatus=Asc(MSComm.1Input)  'Get Status of Both Relays
```

원문: 제품 설명서 (media.ncd.io) · 제조사 원문 자료입니다. 사양은 제조사 사정에 따라 변경될 수 있습니다.

Using Zigbee Single/Dual Relay Controllers

254, 8: Store Relay Status as Power-up Default

This command will store the current On/Off state of the relays in non-volatile EEPROM. The next time power is applied, the relays will automatically return to the store On/Off state. This command will return ASCII Character Code 85 to confirm the receipt of this command.

Send Bytes:	**Byte 1:**	**Byte 2:**
Function:	Command	Command
Decimal Values:	254	8
Hex Values	0xFE	0x08

Receive Byte: Decimal: 85
Hex: 0x55

Sample Code: Store Power-Up Default

```
MSComm1 . Output = Chr$(254)    'Enter Command Mode
MSComm1 . Output = Chr$(8)      'Store Power-Up Default
```

254, 9: Retrieve Start-up Default State of Relays

This command retrieves the stored power-up default state of the relays. This command will send a byte from 0-3 indicating the On/Off state of the relays when power is first applied to the board.
Return Byte 0: Both Relays are Off on Power-Up
Return Byte 1: Relay 1 is On, Relay 2 is Off on Power-Up
Return Byte 2: Relay 2 is On, Relay 1 is Off on Power-Up
Return Byte 3: Both Relays are On upon Power Up

Send Bytes:	**Byte 1:**	**Byte 2:**
Function:	Command	Command
Decimal Values:	254	9
Hex Values	0xFE	0x09

Receive Byte: Decimal: 0 - 3
Hex: 0x00 - 0x03

Sample Code: Get Startup Default

```
MSComm1 . Output = Chr$(254)    'Enter Command Mode
MSComm1 . Output = Chr$(9)      'Ask for Startup Relay Status
Do                              'Wait for Device to Reply
        DoEvents                'Allow Windows to Multitask
Until MSComm1. InBufferCount>0  'If the Device Replies
GetBothRelayStatus=Asc(MSComm.1Input)  'Get Startup Default
```

원문: 제품 설명서 (media.ncd.io) · 제조사 원문 자료입니다. 사양은 제조사 사정에 따라 변경될 수 있습니다.

Technical Support

Technical support is available through our website, controlanything.com.
AccessNCD is the way we connect NCD engineers to our customers.
Click on the **AccessNCD** button located on the top right of the header of each page of our website.

For technical support and application information, contact Travis Elliott, our technical engineer. If you feel that you have discovered a bug in the firmware of our controllers, contact Ryan Sheldon, our hardware developer. If you have programming-related questions or have discovered a bug in our software, please contact Shirui Xu, our software engineer.

Click the '*Tech Support Staff*' tab and click on the appropriate engineer link for assistance. Click on our '*Forum*' tab if you would like to post publicly or review problems that other customers have had and our recommended solutions.

Our engineers monitor questions and respond continually throughout the day. Before requesting telephone technical support, we ask that customers please try to resolve their problems through **AccessNCD** first. However, for persistent problems, NCD technical support engineers will schedule a phone consultation.

Contact Information

National Control Devices, LLC
PO Box 455
Osceola, MO 64776
417-646-5644 phone
866-562-0406 fax
Open 9 a.m. - 4 p.m. CST

All orders *must* be placed online at our website, www.controlanything.com

Notice:
The only authorized resellers of NCD products are

- www.controlanything.com
- www.relaycontrollers.com
- www.relaypros.com
- www.amazon.com

All other websites are not authorized dealers; we have noticed some retailers offering our products fraudulently.

Copyright © 2012
National Control Devices
All Rights Reserved.

원문: 제품 설명서 (media.ncd.io) · 제조사 원문 자료입니다. 사양은 제조사 사정에 따라 변경될 수 있습니다.