5790B

AC Measurement Standard

Service Manual

October 2016

© 2016 Fluke Corporation. All rights reserved. Specifications are subject to change without notice.
All product names are trademarks of their respective companies.

원문: Fluke Calibration 5790B 설명서 · 제조사 원문 자료입니다. 사양은 제조사 사정에 따라 변경될 수 있습니다.

LIMITED WARRANTY AND LIMITATION OF LIABILITY

Each Fluke product is warranted to be free from defects in material and workmanship under normal use and service. The warranty period is one year and begins on the date of shipment. Parts, product repairs, and services are warranted for 90 days. This warranty extends only to the original buyer or end-user customer of a Fluke authorized reseller, and does not apply to fuses, disposable batteries, or to any product which, in Fluke's opinion, has been misused, altered, neglected, contaminated, or damaged by accident or abnormal conditions of operation or handling. Fluke warrants that software will operate substantially in accordance with its functional specifications for 90 days and that it has been properly recorded on non-defective media. Fluke does not warrant that software will be error free or operate without interruption.

Fluke authorized resellers shall extend this warranty on new and unused products to end-user customers only but have no authority to extend a greater or different warranty on behalf of Fluke. Warranty support is available only if product is purchased through a Fluke authorized sales outlet or Buyer has paid the applicable international price. Fluke reserves the right to invoice Buyer for importation costs of repair/replacement parts when product purchased in one country is submitted for repair in another country.

Fluke's warranty obligation is limited, at Fluke's option, to refund of the purchase price, free of charge repair, or replacement of a defective product which is returned to a Fluke authorized service center within the warranty period.

To obtain warranty service, contact your nearest Fluke authorized service center to obtain return authorization information, then send the product to that service center, with a description of the difficulty, postage and insurance prepaid (FOB Destination). Fluke assumes no risk for damage in transit. Following warranty repair, the product will be returned to Buyer, transportation prepaid (FOB Destination). If Fluke determines that failure was caused by neglect, misuse, contamination, alteration, accident, or abnormal condition of operation or handling, including overvoltage failures caused by use outside the product's specified rating, or normal wear and tear of mechanical components, Fluke will provide an estimate of repair costs and obtain authorization before commencing the work. Following repair, the product will be returned to the Buyer transportation prepaid and the Buyer will be billed for the repair and return transportation charges (FOB Shipping Point).

THIS WARRANTY IS BUYER'S SOLE AND EXCLUSIVE REMEDY AND IS IN LIEU OF ALL OTHER WARRANTIES, EXPRESS OR IMPLIED, INCLUDING BUT NOT LIMITED TO ANY IMPLIED WARRANTY OF MERCHANTABILITY OR FITNESS FOR A PARTICULAR PURPOSE. FLUKE SHALL NOT BE LIABLE FOR ANY SPECIAL, INDIRECT, INCIDENTAL, OR CONSEQUENTIAL DAMAGES OR LOSSES, INCLUDING LOSS OF DATA, ARISING FROM ANY CAUSE OR THEORY.

Since some countries or states do not allow limitation of the term of an implied warranty, or exclusion or limitation of incidental or consequential damages, the limitations and exclusions of this warranty may not apply to every buyer. If any provision of this Warranty is held invalid or unenforceable by a court or other decision-maker of competent jurisdiction, such holding will not affect the validity or enforceability of any other provision.

Fluke Corporation
P.O. Box 9090
Everett, WA 98206-9090
U.S.A.

Fluke Europe B.V.
P.O. Box 1186
5602 BD Eindhoven
The Netherlands

11/99

원문: Fluke Calibration 5790B 설명서 · 제조사 원문 자료입니다. 사양은 제조사 사정에 따라 변경될 수 있습니다.

Table of Contents

	Title	Page
1	**Introduction and Specifications**	**1-1**
	Introduction	1-1
	Contact Fluke Calibration	1-2
	Safety Information	1-2
	Symbols	1-4
	Specifications	1-4
	General Specifications	1-5
	Resolution and Range Limits	1-6
	Electrical Specifications	1-6
	Absolute AC Voltage	1-6
	Relative AC Voltage	1-9
	Absolute AC Non-sine Voltage	1-11
	Absolute DC Voltage	1-12
	Relative DC Voltage	1-12
	Secondary Electrical Specifications	1-13
	AC Secondary Performance	1-13
	DC Secondary Performance	1-15
	Operating Characteristics	1-16
	AUX Input Characteristics	1-17
	Absolute Wideband Specifications (5790B/3, 5790B/5, and 5790B/AF)	1-17
2	**Theory of Operation**	**2-1**
	Introduction	2-1
	Functional Block Diagram Discussion	2-2
	Digital Section Overview	2-4
	Analog Section Overview	2-4
	System Interconnect Detailed Circuit Description	2-6
	Digital Motherboard Assembly (A4)	2-6
	Transformer Assembly (A22)	2-6
	Analog Motherboard Assembly (A3)	2-6
	Digital Section Detailed Circuit Description	2-7
	CPU Assembly (A20)	2-7
	Front-Panel Assembly (A2)	2-7
	Terminal LED Indicator Assembly (A25)	2-7
	Analog Section Detailed Circuit Description	2-7

원문: Fluke Calibration 5790B 설명서 · 제조사 원문 자료입니다. 사양은 제조사 사정에 따라 변경될 수 있습니다.

Filter Assembly (A18) 2-7
Regulator/Guard Crossing Assembly (A17) 2-7
Transfer Assembly (A10) 2-7
A/D Amplifier Assembly (A15) 2-8
DAC Assembly (A16) 2-10
Wideband Module (A6) 2-11

3 Calibration Adjustment and Verification 3-1

Introduction 3-1
Calibration Cycle 3-1
Calibration Reports 3-1
Save Calibration Reports 3-2
Calibration Adjustment Security Passcode 3-2
Full or Range Calibration Adjustment 3-2
Automating Calibration Adjustment and Verification 3-3
How Calibration Memory is Organized 3-3
Calibration 3-4
Calibrating (Calibration Adjustment) the Main Input 3-4
Characterizing the DC Source 3-5
Self-Calibrate a Fluke 752A Divider with a Fluke 8508A as the Null Detector 3-5
DC Voltage Source Characterization Values 3-7
DC Calibration Adjustment 3-12
AC Calibration Adjustment 3-18
Calibrate the Wideband AC Option 3-27
Characterizing the AC Source 3-29
Calibration Adjustment of Wideband Input Gain at 1 kHz 3-32
Calibration Adjustment of Wideband Input Flatness 3-33
Calibration Adjustment of AF Option 3-35
Calibration Verification 3-37
Verifying the DC Voltage Performance of the Main Input 3-37
Verifying the Main Input (INPUT 1 or 2) 3-39
Verifying AC-DC Difference for Regions I and III (220 mV through 1000 V Range) 3-45
Verifying Absolute AC Error for Region IV (70 mV through 700 mV Range) 3-45
Verifying Absolute AC Error for Region II (2.2 V through 1000 V Range) 3-49
Verifying Absolute AC Error for Region V (2.2 mV through 22 mV) 3-51
Verifying the Wideband AC Option 3-52
Wideband 1-kHz Gain Verification 3-63
Wideband Gain Verification, 10 Hz to 500 kHz 3-63
Wideband Flatness Verification 3-63
Verification of AF Option 3-64
Update Full Verification Date 3-65

4 Maintenance 4-1

Introduction 4-1
Clean the Exterior 4-1
Fuse Replacement 4-2
Clean the Air Filter 4-4
Access Procedures 4-6
Top and Bottom Covers 4-6

원문: Fluke Calibration 5790B 설명서 · 제조사 원문 자료입니다. 사양은 제조사 사정에 따라 변경될 수 있습니다.

Contents (continued)

Digital Section Cover 4-6
Analog Section Covers 4-6
Rear Panel Removal and Installation 4-6
Front Panel Removal and Installation 4-7
Display Assembly Removal and Installation 4-7
Keyboard Assembly Removal and Installation 4-7
Analog Assembly Removal and Installation 4-7
A20 CPU Assembly Removal and Installation 4-8
Power Transformer Removal and Installation 4-8
Fan Removal and Installation 4-8
Error Codes 4-9

5 List of Replacable Parts 5-1

Introduction 5-1
How to Obtain Parts 5-1

Appendices

A Glossary of AC-DC Transfer Related Terms A-1
B ASCII and IEEE – 488 Bus Codes B-1
C Calibration Constant Information C-1

원문: Fluke Calibration 5790B 설명서 · 제조사 원문 자료입니다. 사양은 제조사 사정에 따라 변경될 수 있습니다.

원문: Fluke Calibration 5790B 설명서 · 제조사 원문 자료입니다. 사양은 제조사 사정에 따라 변경될 수 있습니다.

Chapter 1
Introduction and Specifications

Introduction

Refer to the 5790B Operators Manual (located on the Fluke Calibration website) for complete operating instructions,

This manual provides performance test, calibration adjustment, theory of operation, troubleshooting, and repair procedures necessary to verify and maintain performance of the 5790B (the Product).

Note

In many of the procedures in this manual, the Product is referred to as the Unit Under Test (UUT).

The performance tests are based on the published 1-year specifications for the Product. Fluke Calibration recommends the performance test as an acceptance test when the Product is first received and later as a procedure to ensure that the Product meets its published specifications. Fluke Calibration recommends a 1-year calibration cycle for the Product.

Use calibration adjustments to correct out-of-tolerance parameters so they meet published specifications. If the Product fails the performance test, it is an indication that the Product requires calibration adjustment and/or repair. While calibration adjustment can be accomplished without removal of the covers, repair requires access to the interior of the Product.

Environmental and warm up conditions required for the performance test and calibration adjustments are stated at the beginning of each of the respective sections.

Note

Repairs detailed in this manual are to the Modular-level only. Return the Product to Fluke Calibration or take the Product to a local Fluke Calibration Service Center for deeper-level repair.

원문: Fluke Calibration 5790B 설명서 · 제조사 원문 자료입니다. 사양은 제조사 사정에 따라 변경될 수 있습니다.

Contact Fluke Calibration

To contact Fluke Calibration, call one of the following telephone numbers:

- Technical Support USA: 1-877-355-3225
- Calibration/Repair USA: 1-877-355-3225
- Canada: 1-800-36-FLUKE (1-800-363-5853)
- Europe: +31-40-2675-200
- Japan: +81-3-6714-3114
- Singapore: +65-6799-5566
- China: +86-400-810-3435
- Brazil: +55-11-3759-7600
- Anywhere in the world: +1-425-446-6110

To see product information or download manuals and the latest manual supplements, visit Fluke Calibration's website at www.flukecal.com.

To register your product, visit http://flukecal.com/register-product.

Safety Information

A Warning identifies conditions and procedures that are dangerous to the user. A Caution identifies conditions and procedures that can cause damage to the Product or the equipment under test.

⚠⚠Warning

To prevent possible electrical shock, fire, or personal injury:

- **Read all safety information before you use the Product.**
- **Carefully read all instructions.**
- **Use the Product only as specified, or the protection supplied by the Product can be compromised.**
- **Turn the Product off and remove the mains power cord. Stop for two minutes to let the power assemblies discharge before you open the fuse door.**
- **Replace a blown fuse with exact replacement only for continued protection against arc flash.**
- **Do not apply more than the rated voltage, between the terminals or between each terminal and earth ground.**
- **Limit operation to the specified measurement category, voltage, or amperage ratings.**
- **Use the correct terminals, function, and range for measurements.**
- **Do not touch voltages >30 V ac rms, 42 V ac peak, or 60 V dc.**
- **Do not use the Product around explosive gas, vapor, or in damp or wet environments.**
- **Do not use the Product if it operates incorrectly.**
- **Do not operate the Product with covers removed or the case open. Hazardous voltage exposure is possible.**
- **Do not use an extension cord or adapter plug.**

원문: Fluke Calibration 5790B 설명서 · 제조사 원문 자료입니다. 사양은 제조사 사정에 따라 변경될 수 있습니다.

- **Make sure that the space around the Product meets minimum requirements.**
- **Do not use test leads if they are damaged. Examine the test leads for damaged insulation, exposed metal, or if the wear indicator shows. Check test lead continuity.**
- **Use this Product indoors only.**
- **Do not put the Product where access to the mains power cord is blocked.**
- **Do not use a two-conductor mains power cord unless you install a protective ground wire to the Product ground terminal before you operate the Product.**
- **Use only the mains power cord and connector approved for the voltage and plug configuration in your country and rated for the Product.**
- **Make sure that the Product is grounded before use.**
- **Disconnect the mains power cord before you remove the Product covers.**
- **Remove the input signals before you clean the Product.**
- **Use only specified replacement parts.**
- **Use only specified replacement fuses.**
- **Have an approved technician repair the Product.**
- **Use only cables with correct voltage ratings.**
- **Connect the common test lead before the live test lead and remove the live test lead before the common test lead.**
- **Keep fingers behind the finger guards on the probes.**
- **Remove all probes, test leads, and accessories that are not necessary for the measurement.**
- **Disable the Product if it is damaged.**
- **Do not use the Product if it is damaged.**

원문: Fluke Calibration 5790B 설명서 · 제조사 원문 자료입니다. 사양은 제조사 사정에 따라 변경될 수 있습니다.

Symbols

Table 1-1 lists the symbols used on the instrument and/or in this manual.

Table 1-1. Symbols

Symbol	Description
⚠	WARNING. HAZARDOUS VOLTAGE. Risk of electric shock.
⚠	WARNING.RISK OF DANGER.
	Consult user documentation.
	Fuse
	Certified by CSA Group to North American safety standards.
CE	Conforms to European Union directives.
	Conforms to relevant Australian EMC standards.
	Conforms to relevant South Korean EMC Standards.
CAT II	Measurement Category II is applicable to test and measuring circuits connected directly to utilization points (socket outlets and similar points) of the low-voltage MAINS installation.
	This product complies with the WEEE Directive marking requirements. The affixed label indicates that you must not discard this electrical/electronic product in domestic household waste. Product Category: With reference to the equipment types in the WEEE Directive Annex I, this product is classed as category 9 "Monitoring and Control Instrumentation" product. Do not dispose of this product as unsorted municipal waste.

Specifications

Specifications are valid after a warm-up period of 30 minutes, or twice the time the Product has been turned off, whichever is less. For example, if the Product has been turned off for 5 minutes, the warm-up period is 10 minutes. To simplify evaluation of how the Product covers your workload, use the Absolute Specification. Those include stability, temperature coefficient, linearity, and traceability to external standards.

Note

When the Product is used within ±5 °C (±3 °C in Wideband) of the temperature of the last calibration, it is not necessary to add anything to the Absolute Uncertainty Specifications to determine the ratios between the Product uncertainties and the uncertainties of a unit under test. The initial calibration at Fluke Calibration is done at 23 °C. The temperature of the last calibration can be verified at any time. Push Setup Menu>Calibration to show the last complete verification date and temperature on the calibration screen.

원문: Fluke Calibration 5790B 설명서 · 제조사 원문 자료입니다. 사양은 제조사 사정에 따라 변경될 수 있습니다.

General Specifications

Warm-up Time	30 minutes or twice the time the 5790B has been turned OFF.
Relative Humidity	
Operating	≤80 % to 30 °C, ≤70 % to 40 °C, ≤40 % to 50 °C
Storage	<95 % non-condensing. A power stabilization period of 4 days may be required after extended storage at high temperature and humidity
Altitude	
Operating	0 - 2000 meters
Non-Operating	0 - 12,200 meters
Temperature	
Operating	0 °C to 50 °C
Calibration	15 °C to 35 °C
Storage	-40 °C to 70 °C
Electromagnetic Compatibility (EMC)	
International	IEC 61326-1: Controlled Electromagnetic Environment CISPR 11: Group 1, Class A *Group 1: Equipment has intentionally generated and/or uses conductively-coupled radio frequency energy that is necessary for the internal function of the equipment itself.* *Class A: Equipment is suitable for use in all establishments other than domestic and those directly connected to a low-voltage power supply network that supplies buildings used for domestic purposes. There may be potential difficulties in ensuring electromagnetic compatibility in other environments due to conducted and radiated disturbances.* *Emissions that exceed the levels required by CISPR 11 can occur when the equipment is connected to a test object.*
Korea (KCC)	Class A Equipment (Industrial Broadcasting & Communication Equipment) *Class A: Equipment meets requirements for industrial electromagnetic wave equipment and the seller or user should take notice of it. This equipment is intended for use in business environments and not to be used in homes.*
USA (FCC)	47 CFR 15 subpart B. This product is considered an exempt device per clause 15.103.
Surge	ANSI C62.41-1980, Category A
Reliability	MIL-T-2880D, paragraph 3.13.3
Size	
Height	17.8 cm (7 in) standard rackmount + 1.5 cm (0.6 in)
Width	43.2 cm (17 in)
Depth	63 cm (24.8 in)
Maximum Power Requirements	
5790B	100 VA
Weight	
5790B	24 kg (53 lb)
With Wideband	24.5 kg (54 lb)
Line Power	50 Hz/60 Hz; 100 V - 120 V, 220 V - 240 V
Safety	IEC 61010-1: Overvoltage Category II, Pollution Degree 2 IEC 61010-2-030: Measurement 1000 V
Remote Interfaces	RS-232, IEEE-488, USB, Ethernet
Confidence Level	99 % unless otherwise specified.
DC Zero Cal	Perform the dc zero calibration every 30 days. In addition, perform the dc zero calibration after powering up the unit the first time after unpacking following a shipment or if exposed to an environmental change of greater than 5 °C.

원문: Fluke Calibration 5790B 설명서 · 제조사 원문 자료입니다. 사양은 제조사 사정에 따라 변경될 수 있습니다.

Resolution and Range Limits

Voltage Range	Autorange Limits [1]		Resolution	
	Upper	Lower	Filter Fast	Filter Med/Slow
2.2 mV	2.2 mV	600 µV	0.1 µV	0.1 µV
7 mV	7 mV	1.9 mV	0.1 µV	0.1 µV
22 mV	22 mV	6 mV	0.1 µV	0.1 µV
70 mV	70 mV	19 mV	0.1 µV	0.1 µV
220 mV	220 mV	60 mV	0.1 µV	0.1 µV
700 mV	700 mV	190 mV	1.0 µV	0.1 µV
2.2 V	2.2 V	600 mV	1.0 µV	0.1 µV
7 V	7 V	1.9 V	10 µV	1.0 µV
22 V	22 V	6 V	10 µV	1.0 µV
70 V	70 V	19 V	100 µV	10 µV
220 V	220 V	60 V	100 µV	10 µV
700 V	700 V	190 V	1.0 mV	100 µV
1000 V [2]	1050 V	600 V	1.0 mV	100 µV

[1] In locked ranges, readings may be made approximately 1 % beyond the autorange limits.

[2] The 1000 V range Upper Limit is 1050 V, autorange or locked.

Electrical Specifications

The Product specifications describe the Absolute Specification of the Product. The Product specifications include stability, temperature, and humidity; within specified limits, linearity, line and load regulation, and the reference standard measurement uncertainty. The Product specifications are provided at a 99 % confidence level, k=2.58, normally distributed, unless otherwise stated.

The relative specifications are provided for enhanced accuracy applications. To calculate an enhanced absolute specification from the relative specification, it is necessary to combine the uncertainty of your external standards with the pertinent relative specifications. Specifications are valid after allowing a warm-up period of 30 minutes, or twice the time the Product has been turned off.

Absolute AC Voltage

Voltage Range	Frequency Range	±5 °C of Calibration Temperature			
		AC/DC Transfer Mode ± ppm 2 Years	Measurement Mode ± (ppm of Reading + µV)		
			90 Days	1 Year	2 Years
2.2 mV	10 Hz - 20 Hz		1700 + 1.3	1700 + 1.3	1700 + 1.3
	20 Hz- 40 Hz		740 + 1.3	740 + 1.3	740 + 1.3
	40 Hz - 20 kHz		420 + 1.3	420 + 1.3	420 + 1.3
	20 kHz - 50 kHz		810 + 2.0	810 + 2.0	820 + 2.0
	50 kHz - 100 kHz		1200 + 2.5	1200 + 2.5	1200 + 2.5
	100 kHz - 300 kHz		2300 + 4.0	2300 + 4.0	2300 + 4.0
	300 kHz - 500 kHz		2400 + 6.0	2400 + 8.0	2600 + 8.0
	500 kHz - 1 MHz		3200 + 6.0	3500 + 8.0	5000 + 8.0
7 mV	10 Hz - 20 Hz		850 + 1.3	850 + 1.3	850 + 1.3
	20 Hz - 40 Hz		370 + 1.3	370 + 1.3	370 + 1.3
	40 Hz - 20 kHz		210 + 1.3	210 + 1.3	210 + 1.3
	20 kHz - 50 kHz		400 + 2.0	400 + 2.0	410 + 2.0
	50 kHz - 100 kHz		600 + 2.5	600 + 2.5	610 + 2.5
	100 kHz - 300 kHz		1200 + 4.0	1200 + 4.0	1200 + 4.0
	300 kHz - 500 kHz		1300 + 6.0	1300 + 8.0	1400 + 8.0
	500 kHz - 1 MHz		2000 + 6.0	2300 + 8.0	3600 + 8.0

원문: Fluke Calibration 5790B 설명서 · 제조사 원문 자료입니다. 사양은 제조사 사정에 따라 변경될 수 있습니다.

Voltage Range	Frequency Range	±5 °C of Calibration Temperature			
		AC/DC Transfer Mode ± ppm 2 Years	Measurement Mode ± (ppm of Reading + µV)		
			90 Days	1 Year	2 Years
22 mV	10 Hz - 20 Hz		290 + 1.3	290 + 1.3	290 + 1.3
	20 Hz - 40 Hz		180 + 1.3	190 + 1.3	190 + 1.3
	40 Hz - 20 kHz		110 + 1.3	110 + 1.3	110 + 1.3
	20 kHz - 50 kHz		210 + 2.0	210 + 2.0	210 + 2.0
	50 kHz - 100 kHz		310 + 2.5	310 + 2.5	310 + 2.5
	100 kHz - 300 kHz		810 + 4.0	810 + 4.0	820 + 4.0
	300 kHz - 500 kHz		860 + 6.0	890 + 8.0	1000 + 8.0
	500 kHz - 1 MHz		1400 + 6.0	1700 + 8.0	2600 + 8.0
70 mV	10 Hz - 20 Hz [1]		240 + 1.5	240 + 1.5	240 + 1.5
	20 Hz - 40 Hz		120 + 1.5	120 + 1.5	130 + 1.5
	40 Hz - 20 kHz		64 + 1.5	65 + 1.5	69 + 1.5
	20 kHz - 50 kHz		120 + 2.0	130 + 2.0	130 + 2.0
	50 kHz - 100 kHz		260 + 2.5	260 + 2.5	260 + 2.5
	100 kHz - 300 kHz		510 + 4.0	510 + 4.0	530 + 4.0
	300 kHz - 500 kHz		660 + 6.0	670 + 8.0	680 + 8.0
	500 kHz - 1 MHz		1100 + 6.0	1100 + 8.0	1300 + 8.0
220 mV	10 Hz - 20 Hz [1]	210	210 + 1.5	210 + 1.5	210 + 1.5
	20 Hz - 40 Hz	82	84 + 1.5	85 + 1.5	87 + 1.5
	40 Hz - 20 kHz	34	37 + 1.5	38 + 1.5	43 + 1.5
	20 kHz - 50 kHz	67	69 + 2.0	69 + 2.0	73 + 2.0
	50 kHz - 100 kHz		160 + 2.5	160 + 2.5	160 + 2.5
	100 kHz - 300 kHz		240 + 4.0	250 + 4.0	280 + 4.0
	300 kHz - 500 kHz		360 + 6.0	380 + 8.0	400 + 8.0
	500 kHz - 1 MHz		940 + 6.0	1000 + 8.0	1200 + 8.0
700 mV	10 Hz - 20 Hz [1]	210	210 + 1.5	210 + 1.5	210 + 1.5
	20 Hz - 40 Hz	73	75 + 1.5	76 + 1.5	78 + 1.5
	40 Hz - 20 kHz	27	31 + 1.5	33 + 1.5	38 + 1.5
	20 kHz - 50 kHz	47	50 + 2.0	51 + 2.0	56 + 2.0
	50 kHz - 100 kHz		79 + 2.5	79 + 2.5	84 + 2.5
	100 kHz - 300 kHz		160 + 4.0	180 + 4.0	210 + 4.0
	300 kHz - 500 kHz		300 + 6.0	300 + 8.0	340 + 8.0
	500 kHz - 1 MHz		900 + 6.0	960 + 8.0	1200 + 8.0
2.2 V	10 Hz - 20 Hz [2]	200	200	200	200
	20 Hz - 40 Hz	63	65	66	69
	40 Hz - 20 kHz	18	22	24	29
	20 kHz - 50 kHz	43	45	46	52
	50 kHz - 100 kHz		70	71	76
	100 kHz - 300 kHz		150	160	200
	300 kHz - 500 kHz		250	260	310
	500 kHz - 1 MHz		840	900	1200
7 V	10 Hz - 20 Hz [2]	200	200	200	200
	20 Hz - 40 Hz	63	66	67	70
	40 Hz - 20 kHz	18	22	24	29
	20 kHz - 50 kHz	44	46	48	53
	50 kHz - 100 kHz		80	81	88
	100 kHz - 300 kHz		180	190	220
	300 kHz - 500 kHz		380	400	470
	500 kHz - 1 MHz		1100	1200	1500

원문: Fluke Calibration 5790B 설명서 · 제조사 원문 자료입니다. 사양은 제조사 사정에 따라 변경될 수 있습니다.

5790B
Service Manual

Voltage Range	Frequency Range	±5 °C of Calibration Temperature			
		AC/DC Transfer Mode ± ppm 2 Years	Measurement Mode ± (ppm of Reading + µV)		
			90 Days	1 Year	2 Years
22 V	10 Hz - 20 Hz [2]	200	200	200	200
	20 Hz - 40 Hz	63	66	67	70
	40 Hz - 20 kHz	21	25	27	31
	20 kHz - 50 kHz	44	46	48	53
	50 kHz - 100 kHz		80	81	85
	100 kHz - 300 kHz		180	190	220
	300 kHz - 500 kHz		380	400	470
	500 kHz - 1 MHz		1100	1200	1500
70 V [3]	10 Hz - 20 Hz [2]	200	200	200	200
	20 Hz - 40 Hz	63	67	68	72
	40 Hz - 20 kHz	25	30	32	39
	20 kHz - 50 kHz	55	56	57	63
	50 kHz - 100 kHz		91	94	110
	100 kHz - 300 kHz		190	200	220
	300 kHz - 500 kHz		400	410	510
	500 kHz - 1 MHz		1100	1200	1500
220 V [3]	10 Hz - 20 Hz	200	200	200	200
	20 Hz - 40 Hz	63	67	68	72
	40 Hz - 20 kHz	23	29	31	38
	20 kHz - 50 kHz	63	67	69	77
	50 kHz - 100 kHz		96	98	110
	100 kHz - 300 kHz		210	210	260
	300 kHz - 500 kHz		440	500	700
700 V	10 Hz - 20 Hz [4]	200	200	200	200
	20 Hz - 40 Hz	92	96	99	110
	40 Hz - 20 kHz	36	39	41	47
	20 kHz - 50 kHz		120	130	150
	50 kHz - 100 kHz		400	500	850
1000 V	10 Hz - 20 Hz [4]	200	200	200	200
	20 Hz - 40 Hz	92	96	99	110
	40 Hz - 20 kHz	33	37	38	44
	20 kHz - 50 kHz [5]		120	130	150
	50 kHz - 100 kHz [5]		400	500	850

[1] For 9.5 to 10 Hz, the specifications is ±(1000 ppm of reading + 1.5 µV)

[2] For 9.5 to 10 Hz, the specifications is ±(1000 ppm of reading)

[3] Inputs >100 kHz and with a V*Hz product >2.2E7 are typical.

[4] Typical specification, as determined by sourcing with the Fluke 5205A Precision Power Amplifier.

[5] Inputs >30 kHz and >750 V are typical, as determined by sourcing with the Fluke 5205A Precision Power Amplifier.

Note: The Product is to be used in controlled environments. For disturbances on the mains power supply of >0.5 Vrms from 10 MHz to 40 MHz, add 5 ppm to the 2.2 V range.

원문: Fluke Calibration 5790B 설명서 · 제조사 원문 자료입니다. 사양은 제조사 사정에 따라 변경될 수 있습니다.

Relative AC Voltage

Voltage Range	Frequency Range	±5 °C of Calibration Temperature			
		AC/DC Transfer Mode ± ppm 2 Years	Measurement Mode ± (ppm of Reading + µV)		
			90 Days	1 Year	2 Years
2.2 mV	10 Hz - 20 Hz		100 + 1.3	110 + 1.3	110 + 1.3
	20 Hz - 40 Hz		54 + 1.3	64 + 1.3	68 + 1.3
	40 Hz - 20 kHz		44 + 1.3	57 + 1.3	61 + 1.3
	20 kHz - 50 kHz		57 + 2.0	67 + 2.0	110 + 2.0
	50 kHz - 100 kHz		79 + 2.5	86 + 2.5	120 + 2.5
	100 kHz - 300 kHz		190 + 4.0	230 + 4.0	390 + 4.0
	300 kHz - 500 kHz		590 + 6.0	720 + 8.0	1200 + 8.0
	500 kHz - 1 MHz		2200 + 6.0	2600 + 8.0	4400 + 8.0
7 mV	10 Hz - 20 Hz		80 + 1.3	83 + 1.3	86 + 1.3
	20 Hz - 40 Hz		33 + 1.3	39 + 1.3	45 + 1.3
	40 Hz - 20 kHz		29 + 1.3	36 + 1.3	42 + 1.3
	20 kHz - 50 kHz		40 + 2.0	44 + 2.0	63 + 2.0
	50 kHz - 100 kHz		53 + 2.5	57 + 2.5	72 + 2.5
	100 kHz - 300 kHz		110 + 4.0	130 + 4.0	210 + 4.0
	300 kHz - 500 kHz		370 + 6.0	450 + 8.0	740 + 8.0
	500 kHz - 1 MHz		1600 + 6.0	2000 + 8.0	3400 + 8.0
22 mV	10 Hz - 20 Hz		69 + 1.3	72 + 1.3	75 + 1.3
	20 Hz - 40 Hz		34 + 1.3	40 + 1.3	46 + 1.3
	40 Hz - 20 kHz		30 + 1.3	36 + 1.3	43 + 1.3
	20 kHz - 50 kHz		40 + 2.0	45 + 2.0	64 + 2.0
	50 kHz - 100 kHz		53 + 2.5	57 + 2.5	73 + 2.5
	100 kHz - 300 kHz		97 + 4.0	110 + 4.0	160 + 4.0
	300 kHz - 500 kHz		310 + 6.0	380 + 8.0	610 + 8.0
	500 kHz - 1 MHz		1200 + 6.0	1500 + 8.0	2500 + 8.0
70 mV	10 Hz - 20 Hz		60 + 1.5	61 + 1.5	62 + 1.5
	20 Hz - 40 Hz		27 + 1.5	30 + 1.5	37 + 1.5
	40 Hz - 20 kHz		22 + 1.5	25 + 1.5	34 + 1.5
	20 kHz - 50 kHz		34 + 2.0	36 + 2.0	44 + 2.0
	50 kHz - 100 kHz		53 + 2.5	54 + 2.5	62 + 2.5
	100 kHz - 300 kHz		110 + 4.0	120 + 4.0	170 + 4.0
	300 kHz - 500 kHz		270 + 6.0	290 + 8.0	320 + 8.0
	500 kHz - 1 MHz		910 + 6.0	970 + 8.0	1200 + 8.0
220 mV	10 Hz - 20 Hz	55	60 + 1.5	61 + 1.5	62 + 1.5
	20 Hz - 40 Hz	20	27 + 1.5	29 + 1.5	35 + 1.5
	40 Hz - 20 kHz	17	22 + 1.5	24 + 1.5	31 + 1.5
	20 kHz - 50 kHz	17	22 + 2.0	24 + 2.0	33 + 2.0
	50 kHz - 100 kHz		51 + 2.5	52 + 2.5	59 + 2.5
	100 kHz - 300 kHz		100 + 4.0	120 + 4.0	170 + 4.0
	300 kHz - 500 kHz		260 + 6.0	290 + 8.0	310 + 8.0
	500 kHz - 1 MHz		890 + 6.0	950 + 8.0	1200 + 8.0
700 mV	10 Hz - 20 Hz	55	60 + 1.5	61 + 1.5	62 + 1.5
	20 Hz - 40 Hz	20	27 + 1.5	29 + 1.5	34 + 1.5
	40 Hz - 20 kHz	15	22 + 1.5	24 + 1.5	31 + 1.5
	20 kHz - 50 kHz	15	22 + 2.0	24 + 2.0	33 + 2.0
	50 kHz - 100 kHz		51 + 2.5	52 + 2.5	59 + 2.5
	100 kHz - 300 kHz		100 + 4.0	120 + 4.0	170 + 4.0
	300 kHz - 500 kHz		260 + 6.0	270 + 8.0	310 + 8.0
	500 kHz - 1 MHz		890 + 6.0	950 + 8.0	1200 + 8.0

원문: Fluke Calibration 5790B 설명서 · 제조사 원문 자료입니다. 사양은 제조사 사정에 따라 변경될 수 있습니다.

5790B
Service Manual

Voltage Range	Frequency Range	±5 °C of Calibration Temperature			
		AC/DC Transfer Mode ± ppm 2 Years	Measurement Mode ± (ppm of Reading + µV)		
			90 Days	1 Year	2 Years
2.2 V	10 Hz - 20 Hz	55	60	61	62
	20 Hz - 40 Hz	19	26	28	34
	40 Hz - 20 kHz	15	20	22	27
	20 kHz - 50 kHz	15	21	23	33
	50 kHz - 100 kHz		49	50	57
	100 kHz - 300 kHz		92	110	160
	300 kHz - 500 kHz		220	230	280
	500 kHz - 1 MHz		830	890	1200
7 V	10 Hz - 20 Hz	55	60	61	62
	20 Hz - 40 Hz	19	27	29	36
	40 Hz - 20 kHz	15	20	22	27
	20 kHz - 50 kHz	18	23	26	35
	50 kHz - 100 kHz		62	64	73
	100 kHz - 300 kHz		140	150	180
	300 kHz - 500 kHz		360	380	450
	500 kHz - 1 MHz		1100	1200	1500
22 V	10 Hz - 20 Hz	55	60	61	62
	20 Hz - 40 Hz	19	28	30	37
	40 Hz - 20 kHz	15	20	22	27
	20 kHz - 50 kHz	18	23	26	35
	50 kHz - 100 kHz		62	64	69
	100 kHz - 300 kHz		140	150	180
	300 kHz - 500 kHz		360	380	450
	500 kHz - 1 MHz		1100	1200	1500
70 V [1]	10 Hz - 20 Hz	55	60	62	63
	20 Hz - 40 Hz	19	29	31	39
	40 Hz - 20 kHz	15	23	25	34
	20 kHz - 50 kHz	22	25	27	39
	50 kHz - 100 kHz		64	68	85
	100 kHz - 300 kHz		140	150	180
	300 kHz - 500 kHz		370	390	490
	500 kHz - 1 MHz		1100	1200	1500
220 V [1]	10 Hz - 20 Hz	55	61	62	64
	20 Hz - 40 Hz	19	30	32	40
	40 Hz - 20 kHz	15	23	25	34
	20 kHz - 50 kHz	24	30	34	49
	50 kHz - 100 kHz		66	69	83
	100 kHz - 300 kHz		160	170	220
	300 kHz - 500 kHz		410	480	680
700 V	10 Hz - 20 Hz [2]	55	62	63	65
	20 Hz - 40 Hz	19	31	33	41
	40 Hz - 20 kHz	19	24	25	31
	20 kHz - 50 kHz		100	110	140
	50 kHz - 100 kHz		390	500	850
1000 V	10 Hz - 20 Hz [2]	55	62	63	65
	20 Hz - 40 Hz	19	31	33	41
	40 Hz - 20 kHz	19	24	25	31
	20 kHz - 50 kHz [3]		100	110	140
	50 kHz - 100 kHz [3]		390	500	850

[1] Inputs >100 kHz and with a V*Hz product >2.2E7 are typical.
[2] Typical specification, as determined by sourcing with the Fluke 5205A Precision Power Amplifier.
[3] Inputs >30 kHz and >750 V are typical, as determined by sourcing with the Fluke 5205A Precision Power Amplifier.

원문: Fluke Calibration 5790B 설명서 · 제조사 원문 자료입니다. 사양은 제조사 사정에 따라 변경될 수 있습니다.

Absolute AC Non-sine Voltage

Range [1]	Frequency Range	1-Year, tcal ±5 °C, ±(% of reading + µV)
2.2 mV	10 Hz - 45 Hz	0.1 + 1.3
	45 Hz - 1 kHz	0.1+ 1.3
	1 kHz - 20 kHz	0.17+ 1.3
	20 kHz - 100 kHz	0.5 + 2.5
7 mV	10 kHz - 45 Hz	0.1 + 1.3
	45 Hz - 1 kHz	0.1 + 1.3
	1 kHz - 20 kHz	0.17 + 1.3
	20 kHz - 100 kHz	0.5 + 2.5
22 mV	10 Hz - 45 Hz	0.1 + 1.3
	45 Hz - 1 kHz	0.1 + 1.3
	1 kHz - 20 kHz	0.17+ 1.3
	20 kHz - 100 kHz	0.5 + 2.5
70 mV	10 Hz - 45 Hz	0.1 + 1.5
	45 kHz - 1 kHz	0.1 + 1.5
	1 kHz - 20 kHz	0.17 + 1.5
	20 kHz - 100 kHz	0.5 + 2.5
220 mV	10 Hz - 45 Hz	0.1 + 1.5
	45 Hz - 1 kHz	0.1 + 1.5
	1 kHz - 20 kHz	0.17 + 1.5
	20 kHz - 100 kHz	0.5 + 2.5
700 mV	10 Hz - 45 Hz	0.1 + 1.5
	45 Hz - 1 kHz	0.1 + 1.5
	1 kHz - 20 kHz	0.17 + 1.5
	20 kHz - 100 kHz	0.5 + 2.5
2.2 V [2]	10 Hz - 45 Hz	0.1
	45 Hz - 1 kHz	0.1
	1 kHz - 20 kHz	0.17
	20 kHz - 100 kHz	0.5
7 V	10 Hz - 45 Hz	0.1
	45 Hz - 1 kHz	0.1
	1 kHz - 20 kHz	0.17
	20 kHz - 100 kHz	0.5
22 V [2]	10 Hz - 45 Hz	0.1
	45 Hz - 1 kHz	0.1
	1 kHz - 20 kHz	0.17
	20 kHz - 100 kHz	0.5
70 V	10 Hz - 45 Hz	0.1
	45 Hz - 1 kHz	0.1
	1 kHz - 20 kHz	0.17
	20 kHz - 100 kHz	0.5

[1] Specifications apply for non-sinusoidal inputs with crest factor <3.0 and with harmonic content band-limited to <1 MHz.
[2] Crest factor limited to <2.3 for signals greater than 75 % of full scale RMS.

원문: Fluke Calibration 5790B 설명서 · 제조사 원문 자료입니다. 사양은 제조사 사정에 따라 변경될 수 있습니다.

Absolute DC Voltage

Voltage Range	± 5 °C of Calibration Temperature		
	Measurement Mode ± (ppm of Reading + µV)		
	90 Days	1 Year	2 Years
220 mV	37 + 1.5	38 + 1.5	43 + 1.5
700 mV	31 + 1.5	33 + 1.5	38 + 1.5
2.2 V	22	24	29
7 V	22	24	29
22 V	25	27	31
70 V	30	32	39
220 V	29	31	38
700 V	39	41	47
1000 V	37	38	44
Note: DC specification valid only when dc input signal is averaged with an equal and opposite dc input signal to eliminate dc offset errors. The use of Input 1 for dc inputs is not recommended due to the inherent thermal EMFs in a “N” connector. See Operators Manual for details.			

Relative DC Voltage

Voltage Range	± 5 °C of Calibration Temperature		
	Measurement Mode ± (ppm of Reading + µV)		
	90 Days	1 Year	2 Years
220 mV	22 + 1.5	24 + 1.5	31 + 1.5
700 mV	22 + 1.5	24 + 1.5	31 + 1.5
2.2 V	20	22	27
7 V	20	22	27
22 V	20	22	27
70 V	23	25	34
220 V	23	25	34
700 V	24	25	31
1000 V	24	25	31
Note: DC specification valid only when dc input signal is averaged with an equal and opposite dc input signal to eliminate dc offset errors. The use of Input 1 for dc inputs is not recommended due to the inherent thermal EMFs in a “N” connector. See Operators Manual for details.			

원문: Fluke Calibration 5790B 설명서 · 제조사 원문 자료입니다. 사양은 제조사 사정에 따라 변경될 수 있습니다.

Secondary Electrical Specifications

Secondary performance specifications and operating characteristics are included in uncertainty specifications. They are provided for special calibration requirements such as stability or linearity tests.

AC Secondary Performance

Voltage Range	Frequency Range	24 Hour AC Stability ± 1 °C Slow Filter Peak-Peak ± µV	Temperature Coefficient [1]		Input Resistance [2]
			10 °C to 40 °C	0 °C to 10 °C 40 °C to 50 °C	
			ppm / °C		
2.2 mV	10 Hz - 20 Hz	0.4	50	50	10 MΩ
	20 Hz - 40 Hz	0.4	50	50	
	40 Hz - 20 kHz	0.4	50	50	
	20 kHz - 50 kHz	0.4	50	50	
	50 kHz - 100 kHz	0.8	75	75	
	100 kHz - 300 kHz	1.5	100	100	
	300 kHz - 500 kHz	3.0	150	150	
	500 kHz - 1 MHz	4.5	200	200	
7 mV	10 Hz - 20 Hz	0.4	15	15	10 MΩ
	20 Hz - 40 Hz	0.4	15	15	
	40 Hz - 20 kHz	0.4	15	15	
	20 kHz - 50 kHz	0.4	15	15	
	50 kHz - 100 kHz	0.8	25	25	
	100 kHz - 300 kHz	1.5	60	60	
	300 kHz - 500 kHz	3.0	80	80	
	500 kHz - 1 MHz	4.5	125	125	
22 mV	10 Hz - 20 Hz	0.4	5	5	10 MΩ
	20 Hz - 40 Hz	0.4	5	5	
	40 Hz - 20 kHz	0.4	5	5	
	20 kHz - 50 kHz	0.4	5	5	
	50 kHz - 100 kHz	0.8	8	8	
	100 kHz - 300 kHz	1.5	10	10	
	300 kHz - 500 kHz	3.0	40	40	
	500 kHz - 1 MHz	4.5	100	100	
		± (ppm of Reading)			
70 mV	10 Hz - 20 Hz	18	5	5	10 MΩ
	20 Hz - 40 Hz	18	5	5	
	40 Hz - 20 kHz	18	5	5	
	20 kHz - 50 kHz	18	5	5	
	50 kHz - 100 kHz	24	8	8	
	100 kHz - 300 kHz	24	10	10	
	300 kHz - 500 kHz	48	30	30	
	500 kHz - 1 MHz	150	75	75	
220 mV	10 Hz - 20 Hz	12	1.5	3.0	10 MΩ
	20 Hz - 40 Hz	8	1.5	3.0	
	40 Hz - 20 kHz	8	1.5	3.0	
	20 kHz - 50 kHz	8	2.0	3.0	
	50 kHz - 100 kHz	18	5.0	8.0	
	100 kHz - 300 kHz	24	10.0	10.0	
	300 kHz - 500 kHz	36	20.0	20.0	
	500 kHz - 1 MHz	120	50.0	50.0	

원문: Fluke Calibration 5790B 설명서 · 제조사 원문 자료입니다. 사양은 제조사 사정에 따라 변경될 수 있습니다.

5790B
Service Manual

Voltage Range	Frequency Range	24 Hour AC Stability ± 1 °C Slow Filter Peak-Peak ± µV	Temperature Coefficient [1]		Input Resistance [2]
			10 °C to 40 °C	0 °C to 10 °C 40 °C to 50 °C	
			ppm / °C		
700 mV	10 Hz - 20 Hz	8	1.5	3.0	10 MΩ
	20 Hz - 40 Hz	6	1.5	3.0	
	40 Hz - 20 kHz	6	1.5	3.0	
	20 kHz - 50 kHz	6	2.0	3.0	
	50 kHz - 100 kHz	12	5.0	8.0	
	100 kHz - 300 kHz	18	10.0	10.0	
	300 kHz - 500 kHz	36	20.0	20.0	
	500 kHz - 1 MHz	96	50.0	50.0	
2.2 V	10 Hz - 20 Hz	8	1.5	3.0	10 MΩ
	20 Hz - 40 Hz	5	1.5	3.0	
	40 Hz - 20 kHz	5	1.5	3.0	
	20 kHz - 50 kHz	5	2.0	3.0	
	50 kHz - 100 kHz	10	5.0	8.0	
	100 kHz - 300 kHz	18	10.0	10.0	
	300 kHz - 500 kHz	30	20.0	20.0	
	500 kHz - 1 MHz	90	50.0	50.0	
7 V	10 Hz - 20 Hz	8	1.5	3.0	50 kΩ
	20 Hz - 40 Hz	5	1.5	3.0	
	40 Hz - 20 kHz	5	1.5	3.0	
	20 kHz - 50 kHz	5	2.0	3.0	
	50 kHz - 100 kHz	10	5.0	8.0	
	100 kHz - 300 kHz	18	15.0	15.0	
	300 kHz - 500 kHz	30	30.0	30.0	
	500 kHz - 1 MHz	90	65.0	65.0	
22 V	10 Hz - 20 Hz	8	1.5	3.0	50 kΩ
	20 Hz - 40 Hz	5	1.5	3.0	
	40 Hz - 20 kHz	5	1.5	3.0	
	20 kHz - 50 kHz	5	2.0	3.0	
	50 kHz - 100 kHz	10	5.0	8.0	
	100 kHz - 300 kHz	18	15.0	15.0	
	300 kHz - 500 kHz	30	30.0	30.0	
	500 kHz - 1 MHz	90	65.0	65.0	
70 V [3]	10 Hz - 20 Hz	8	1.5	3.0	50 kΩ
	20 Hz - 40 Hz	5	1.5	3.0	
	40 Hz - 20 kHz	5	1.5	3.0	
	20 kHz - 50 kHz	5	2.0	3.0	
	50 kHz - 100 kHz	18	5.0	8.0	
	100 kHz - 300 kHz	36	15.0	15.0	
	300 kHz - 500 kHz	48	40.0	40.0	
	500 kHz - 1 MHz	120	75.0	75.0	

원문: Fluke Calibration 5790B 설명서 · 제조사 원문 자료입니다. 사양은 제조사 사정에 따라 변경될 수 있습니다.

Voltage Range	Frequency Range	24 Hour AC Stability ± 1 °C Slow Filter Peak-Peak ± µV	Temperature Coefficient [1]		Input Resistance [2]
			10 °C to 40 °C	0 °C to 10 °C 40 °C to 50 °C	
			ppm / °C		
220 V [3]	10 Hz - 20 Hz	8	1.5	3.0	50 kΩ
	20 Hz - 40 Hz	5	1.5	3.0	
	40 Hz - 20 kHz	5	1.5	3.0	
	20 kHz - 50 kHz	5	2.0	3.0	
	50 kHz - 100 kHz	18	5.0	8.0	
	100 kHz - 300 kHz	36	15.0	15.0	
	300 kHz - 500 kHz	48	40.0	40.0	
700 V	10 Hz - 20 Hz [4]	8	1.5	4.0	500 kΩ
	20 Hz - 40 Hz	5	1.5	4.0	
	40 Hz – 20 kHz	5	1.5	4.0	
	20 kHz – 50 kHz	18	5.0	7.0	
	50 kHz - 100 kHz	36	15.0	15.0	
1000 V	10 Hz - 20 Hz [4]	8	1.5	4.0	500 kΩ
	20 Hz - 40 Hz	5	1.5	4.0	
	40 Hz - 20 kHz	5	1.5	4.0	
	20 kHz - 50 kHz [5]	18	5.0	7.0	
	50 kHz - 100 kHz [5]	36	15.0	15.0	

[1] Add to uncertainty when more than 5 °C from calibration temperature.
[2] Input capacitance approximately 100 pF.
[3] Inputs with a V*Hz product >2.2 E7 are unspecified.
[4] Typical specification, as determined by sourcing with the Fluke 5205A Precision Power Amplifier.
[5] Inputs that are >30 kHz and >750 V are typical, as determined by sourcing with the Fluke 5205A Precision Power Amplifier.

DC Secondary Performance

Voltage Range	Temperature Coefficient [1]		Input Resistance [2]
	10 °C to 40 °C	0 °C to 10 °C 40 °C to 50 °C	
	ppm / °C		
220 mV	1.5	3.0	10 MΩ
700 mV	1.5	3.0	10 MΩ
2.2 V	1.5	3.0	10 MΩ
7 V	1.5	3.0	50 kΩ
22 V	1.5	3.0	50 kΩ
70 V	1.5	3.0	50 kΩ
220 V	1.5	3.0	50 kΩ
700 V	1.5	4.0	500 kΩ
1000 V	1.5	4.0	500 kΩ

[1] Add to uncertainty when more than 5 °C from calibration temperature.
[2] Input capacitance approximately 100 pF.
Note: DC specification valid only when dc input signal is averaged with an equal and opposite dc input signal to eliminate dc offset errors. The use of Input 1 for dc inputs is not recommended due to the inherent thermal EMFs in a “N” connector. See Operators Manual for details.

원문: Fluke Calibration 5790B 설명서 · 제조사 원문 자료입니다. 사양은 제조사 사정에 따라 변경될 수 있습니다.

Operating Characteristics

Maximum Non-destructive Input ..... 1200 V rms
Guard Isolation ..... 10 V peak
Volt-Hertz Product ..... 1 x 10^8
Frequency Accuracy (from 0 °C to 50 °C)
  10 Hz - 120 Hz ..... 100 ppm + 10 digits
  Above 120 Hz ..... 100 ppm + 2 digits
Frequency Resolution ..... 1.00 Hz to 119.99 Hz
  0.1200 kHz to 1.1999 kHz
  1.200 kHz to 11.999 kHz
  12.00 kHz to 119.99 kHz
  0.1200 MHz to 1.0000 MHz
  1.0000 MHz to 1.1999 MHz
  1.200 MHz to 11.999 MHz (Wideband only except 1.200 MHz to 1.209 MHz)
  30.00 MHz 30.00 MHz to 50.00 MHz (Wideband 5790B/5 & 5790B/AF only)
Reading Rate
  <40 Hz ..... 2 seconds per reading
  40 Hz ..... 2 seconds decreasing linearly to 1 second at 200 Hz
  >200 Hz ..... 1 second per reading
Maximum Settling Time to Full Specifications (in range lock)
  Filter Off ..... 1 sample
    dc ..... 6 seconds
    <200 Hz ..... 8 seconds
    >200 Hz ..... 4 seconds
  Filter Fast ..... 4 averaged samples
    dc ..... 10 seconds
    <200 Hz ..... 16 seconds
    >200 Hz ..... 8 seconds
  Filter Medium ..... 16 averaged samples
    dc ..... 22 seconds
    <200 Hz ..... 32 seconds
    >200 Hz ..... 16 seconds
  Filter Slow ..... 32 averaged samples
    dc ..... 40 seconds
    <200 Hz ..... 64 seconds
    >200 Hz ..... 32 seconds
Filter Buffer Restart Limits:
  Fine: Fast: 10 counts
    Medium/Slow
      <220 mV ..... 10 counts
      >220 mV ..... 100 counts
  Medium: Fast: 100 counts
    Medium/Slow
      <220 mV ..... 100 counts
      >220 mV ..... 1000 counts
  Course: Fast: 1000 counts
    Medium/Slow
      <220 mV ..... 1000 counts
      >220 mV ..... 10000 counts
Input Waveform ..... Specified for sinewave with THD less than 1 %

원문: Fluke Calibration 5790B 설명서 · 제조사 원문 자료입니다. 사양은 제조사 사정에 따라 변경될 수 있습니다.

AUX Input Characteristics

The AUX input can be used with the Fluke A40/A40A Series Current Shunts to make relative ac current measurements. The 5790A-7001 A40/A40A Current Shunt Adapter and Cable are required. For optimal current measurements using shunts, see the Operators Manual.

Input Resistance ..... 91 Ω ± 1 %
Operating Input Voltage ..... 3 mV to 500 mV
Maximum Non-Destructive Input ..... 20 V rms

Absolute Wideband Specifications (5790B/3, 5790B/5, and 5790B/AF)

Voltage [1] Range	Frequency Range	Flatness [2] 1 year ± 3 °C ± (% of Reading + µV)	Flatness [3] Temperature Coefficient ppm / °C	Absolute Specifcations 0 °C to 50 °C [4] ± (% of Reading + µV)			Resolution
				90 Days	1 Year	2 Years	
2.2 mV	10 Hz - 30 Hz	0.10 + 0	75	0.5 + 1.2	0.6 + 1.5	0.8 + 2	0.1 µV
	30 Hz - 120 Hz	0.05 + 0	75	0.5 + 1.2	0.6 + 1.5	0.8 + 2	
	120 Hz - 1.2 kHz	0.05 + 0	75	0.5 + 1.2	0.6 + 1.5	0.8 + 2	
	1.2 kHz - 120 kHz	0.05 + 0	75	0.5 + 1.2	0.6 + 1.5	0.8 + 2	
	120 kHz - 500 kHz	0.07 + 1	75	0.5 + 1.2	0.6 + 1.5	0.8 + 2	
	500 kHz - 1.2 MHz	0.07 + 1	75				
	1.2 MHz - 2 MHz	0.07 + 1	100				
	2 MHz - 10 MHz	0.17 + 1	200				
	10 MHz - 20 MHz	0.30 + 1	200				
	20 MHz - 30 MHz	0.70 + 2	400				
	30 MHz - 50 MHz [5]	1.00 + 2	400				
7 mV	10 Hz - 30 Hz	0.10 + 0	75	0.4 + 5	0.5 + 7	0.7 + 8	0.1 µV
	30 Hz - 120 Hz	0.05 + 0	75	0.4 + 5	0.5 + 7	0.7 + 8	
	120 Hz - 1.2 kHz	0.05 + 0	75	0.4 + 5	0.5 + 7	0.7 + 8	
	1.2 kHz - 120 kHz	0.05 + 0	75	0.4 + 5	0.5 + 7	0.7 + 8	
	120 kHz - 500 kHz	0.07 + 1	75	0.4 + 5	0.5 + 7	0.7 + 8	
	500 kHz - 1.2 MHz	0.07 + 1	75				
	1.2 MHz - 2 MHz	0.07 + 1	100				
	2 MHz - 10 MHz	0.1 + 1	200				
	10 MHz - 20 MHz	0.17 + 1	200				
	20 MHz - 30 MHz	0.37 + 1	300				
	30 MHz - 50 MHz [5]	0.5 + 1	300				
22 mV	10 Hz - 30 Hz	0.10	75	0.4 + 10	0.5 + 13	0.7 + 16	0.1 µV
	30 Hz - 120 Hz	0.05	75	0.4 + 10	0.5 + 13	0.7 + 16	
	120 Hz - 1.2 kHz	0.05	75	0.4 + 10	0.5 + 13	0.7 + 16	
	1.2 kHz - 120 kHz	0.05	75	0.4 + 10	0.5 + 13	0.7 + 16	
	120 kHz - 500 kHz	0.07	75	0.4 + 10	0.5 + 13	0.7 + 16	
	500 kHz - 1.2 MHz	0.07	75				
	1.2 MHz - 2 MHz	0.07	75				
	2 MHz - 10 MHz	0.1	100				
	10 MHz - 20 MHz	0.17	100				
	20 MHz - 30 MHz	0.37	200				
	30 MHz - 50 MHz [5]	0.6	200				

원문: Fluke Calibration 5790B 설명서 · 제조사 원문 자료입니다. 사양은 제조사 사정에 따라 변경될 수 있습니다.

5790B
Service Manual

Voltage [1] Range	Frequency Range	Flatness [2] 1 year ± 3 °C ± (% of Reading + µV)	Flatness [3] Temperature Coefficient ppm / °C	Absolute Specifcations 0 °C to 50 °C [4] ± (% of Reading + µV)			Resolution
				90 Days	1 Year	2 Years	
70 mV	10 Hz - 30 Hz	0.10	40	0.4 + 20	0.5 + 30	0.6 + 40	1.0 µV
	30 Hz – 120 Hz	0.05	40	0.4 + 20	0.5 + 30	0.6 + 40	
	120 Hz - 1.2 kHz	0.05	40	0.4 + 20	0.5 + 30	0.6 + 40	
	1.2 kHz - 120 kHz	0.05	40	0.4 + 20	0.5 + 30	0.6 + 40	
	120 kHz - 500 kHz	0.05	40	0.4 + 20	0.5 + 30	0.6 + 40	
	500 kHz - 1.2 MHz	0.05	40				
	1.2 MHz - 2 MHz	0.05	75				
	2 MHz - 10 MHz	0.1	100				
	10 MHz - 20 MHz	0.15	100				
	20 MHz - 30 MHz	0.35	200				
	30 MHz - 50 MHz [5]	0.6	200				
220 mV	10 Hz - 30 Hz	0.10	40	0.3 + 60	0.4 + 80	0.5 + 100	1.0 µV
	30 Hz - 120 Hz	0.04	40	0.3 + 60	0.4 + 80	0.5 + 100	
	120 Hz - 1.2 kHz	0.04	40	0.3 + 60	0.4 + 80	0.5 + 100	
	1.2 kHz - 120 kHz	0.04	40	0.3 + 60	0.4 + 80	0.5 + 100	
	120 kHz - 500 kHz	0.04	40	0.3 + 60	0.4 + 80	0.5 + 100	
	500 kHz - 1.2 MHz	0.05	40				
	1.2 MHz - 2 MHz	0.05	75				
	2 MHz - 10 MHz	0.1	100				
	10 MHz - 20 MHz	0.15	100				
	20 MHz - 30 MHz	0.35	200				
	30 MHz - 50 MHz [5]	0.6	200				
700 mV	10 Hz - 30 Hz	0.10	40	0.3 + 200	0.4 + 300	0.5 + 400	10.0 µV
	30 Hz - 120 Hz	0.03	40	0.3 + 200	0.4 + 300	0.5 + 400	
	120 Hz - 1.2 kHz	0.03	40	0.3 + 200	0.4 + 300	0.5 + 400	
	1.2 kHz - 120 kHz	0.03	40	0.3 + 200	0.4 + 300	0.5 + 400	
	120 kHz - 500 kHz	0.03	40	0.3 + 200	0.4 + 300	0.5 + 400	
	500 kHz - 1.2 MHz	0.05	40				
	1.2 MHz - 2 MHz	0.05	75				
	2 MHz - 10 MHz	0.1	100				
	10 MHz - 20 MHz	0.15	100				
	20 MHz - 30 MHz	0.35	200				
	30 MHz - 50 MHz [5]	0.6	200				
2.2 V	10 Hz - 30 Hz	0.10	40	0.3 + 300	0.35 + 400	0.4 + 500	10.0 µV
	30 Hz - 120 Hz	0.03	40	0.3 + 300	0.35 + 400	0.4 + 500	
	120 Hz - 1.2 kHz	0.03	40	0.3 + 300	0.35 + 400	0.4 + 500	
	1.2 kHz - 120 kHz	0.03	40	0.3 + 300	0.35 + 400	0.4 + 500	
	120 kHz - 500 kHz	0.03	40	0.3 + 300	0.35 + 400	0.4 + 500	
	500 kHz - 1.2 MHz	0.05	40				
	1.2 MHz - 2 MHz	0.05	75				
	2 MHz - 10 MHz	0.1	100				
	10 MHz - 20 MHz	0.15	100				
	20 MHz - 30 MHz	0.35	200				
	30 MHz - 50 MHz [5]	0.6	200				

원문: Fluke Calibration 5790B 설명서 · 제조사 원문 자료입니다. 사양은 제조사 사정에 따라 변경될 수 있습니다.

Voltage [1] Range	Frequency Range	Flatness [2] 1 year ± 3 °C ± (% of Reading + µV)	Flatness [3] Temperature Coefficient ppm / °C	Absolute Specifcations 0 °C to 50 °C [4] ± (% of Reading + µV)			Resolution
				90 Days	1 Year	2 Years	
7 V	10 Hz - 30 Hz	0.10	40	0.3 + 500	0.35 + 800	0.4 + 1000	100.0 µV
	30 Hz - 120 Hz	0.03	40	0.3 + 500	0.35 + 800	0.4 + 1000	
	120 Hz - 1.2 kHz	0.03	40	0.3 + 500	0.35 + 800	0.4 + 1000	
	1.2 kHz - 120 kHz	0.03	40	0.3 + 500	0.35 + 800	0.4 + 1000	
	120 kHz - 500 kHz	0.03	40	0.3 + 500	0.35 + 800	0.4 + 1000	
	500 kHz - 1.2 MHz	0.05	40				
	1.2 MHz - 2 MHz	0.05	75				
	2 MHz - 10 MHz	0.1	100				
	10 MHz - 20 MHz	0.15	100				
	20 MHz - 30 MHz	0.35	200				
	30 MHz - 50 MHz [5],[6]	0.6	200				

[1] Range limits same as INPUT 1 or INPUT 2.
[2] Relative to 1 kHz, for 2-year specification multiply by 1.5.
[3] Add to flatness specifications when more than 3 °C from calibration temperature.
[4] At input connector.
[5] Applies to 5790B/5 & 5790B/AF only.
[6] Maximum amplitude is limited to 3.5 V.

Wideband Characteristics

Maximum Non-Destructive Input ..... 10 V rms
Guard Isolation ..... 0.5 V peak
Input Impedance
1 kHz..... 50 Ω (± 0.5 %)
VSWR ..... <1.05 typical

5790B/AF

The 5790B/AF absolute specification is ±0.23 % of voltage reading (1 year, 23 °C ±3 °C, 95 % confidence level (k=2), normally distributed). Specification applies to 50 MHz, 223.61 mV, referenced to the end of the provided serialized 0.91 meter (3 ft) cable. When using the cable and 50 MHz Cable Correction, other ranges and frequencies can be measured but the Product is only specified within ±4 % of 50 MHz, 223.61 mV (214.66 mV to 232.55 mV)

원문: Fluke Calibration 5790B 설명서 · 제조사 원문 자료입니다. 사양은 제조사 사정에 따라 변경될 수 있습니다.

원문: Fluke Calibration 5790B 설명서 · 제조사 원문 자료입니다. 사양은 제조사 사정에 따라 변경될 수 있습니다.

Chapter 2
Theory of Operation

Introduction

The Product is an automated ac-dc transfer standard. The following elements are among those critical to establishing the accuracy of the Product.

- The FTS (Fluke RMS Thermal Sensor) is the transfer element. It compares a precisely known adjustable dc voltage (or a square wave derived from dc) to an unknown ac voltage. If the FTS output remains unchanged when the input switches from the unknown ac voltage to the known dc voltage, the RMS value of the ac voltage is equal to the dc voltage. The FTS has extremely flat frequency response and has short term stability approaching 1 part per million (ppm).
- Highly stable resistor networks scale the 7 V range and higher to the FTS 2 V operating level and to scale the precision reference to the 0.7 mV level.
- An ADC (analog to digital converter) measures the FTS output.
- A high-resolution DAC (digital to analog converter) generates precisely variable dc for the ac-dc transfer.
- An ultra-stable dc voltage reference establishes DAC accuracy.
- A dc-to-square-wave converter chops the DAC output to eliminate dc reversal error in the RMS sensor.

원문: Fluke Calibration 5790B 설명서 · 제조사 원문 자료입니다. 사양은 제조사 사정에 따라 변경될 수 있습니다.

Functional Block Diagram Discussion

Refer to part 1 of Figure 2-1, the functional block diagram. The ac signal to be measured is applied to the FTS first through attenuators (precision resistor networks switched in or out depending on range), the transfer switch, and precision amplifiers (again depending on range). The A/D Amplifier (A15 assembly) measures the output of the FTS. In the block diagram this measurement is called M1.

The next step in the transfer process is shown in part 2 of Figure 2-1. The system takes another measurement, called M2. The CPU sets the precision DAC (digital to analog converter) to approximately the same voltage as the output of the divider network for M1. This voltage is converted to a 28 Hz square wave by the precision chopper circuit and applied to the FTS through the transfer switch and the same range amplifier. The output of the FTS is measured again to yield M2.

In Wideband mode, the Wideband option module takes over the function of the Transfer assembly. The chopped reference from the A/D Assembly is 80 Hz for Wideband mode. The Wideband assembly is ac-coupled, therefore does not make ac-dc transfers.

Refer to the flowchart (part 3 of Figure 2-1) in the block diagram. After M1 and M2 are taken, the CPU computes the value of the unknown ac voltage at the input, called Vac, using the following formula:

$$Vac = Vdc + (M2 - M1)$$

If Vac and Vdc closely agree, the results are displayed on the front panel and the measurement is complete. If the difference between Vac and Vdc is too large, the CPU readjusts the DAC based on the above formula and begins another measurement cycle.

Calibration constants to correct for FTS and amplifier frequency response variations are stored in memory and applied to measurements before they are displayed. In order to apply the correct constants, a frequency counter measures the frequency of the incoming signal.

원문: Fluke Calibration 5790B 설명서 · 제조사 원문 자료입니다. 사양은 제조사 사정에 따라 변경될 수 있습니다.

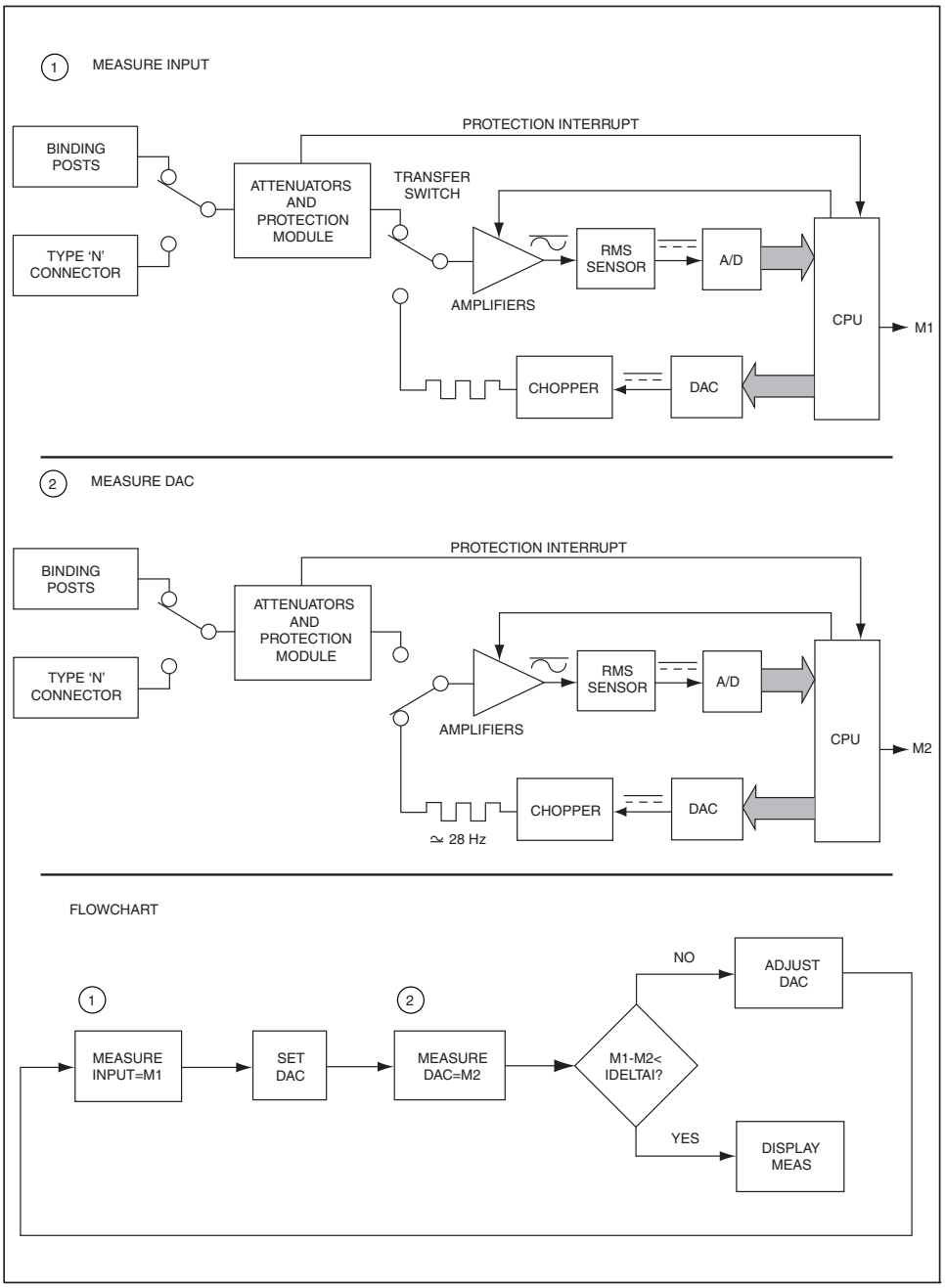

elu002.eps

Figure 2-1. Functional Block Diagram

원문: Fluke Calibration 5790B 설명서 · 제조사 원문 자료입니다. 사양은 제조사 사정에 따라 변경될 수 있습니다.

Digital Section Overview

The unguarded Digital Section contains the CPU assembly (A20), the Front Panel assembly (A2), Keyboard assembly (A1), and the Rear Panel I/O assembly (A21). Figure 2-2 is a block diagram of the digital section of the Product.

Analog Section Overview

The guarded analog section of the Product contains the following assemblies:

- Filter (A18)
- Regulator/Guard Crossing (A17)
- Transfer (A10)
- A/D Amplifier (A15)
- DAC (A16)
- Wideband (A6)

These analog assemblies are interfaced to the analog motherboard assembly (A3). The guarded digital bus generated by the guard crossing portion of the regulator/guard crossing assembly controls all analog assemblies except the filter. The guard crossing interfaces with the unguarded CPU assembly via a fiber-optic link. The transformer assembly, together with the filter assembly and the regulator portion of the regulator/guard crossing assembly, create the system power supply for all the analog assemblies.

원문: Fluke Calibration 5790B 설명서 · 제조사 원문 자료입니다. 사양은 제조사 사정에 따라 변경될 수 있습니다.

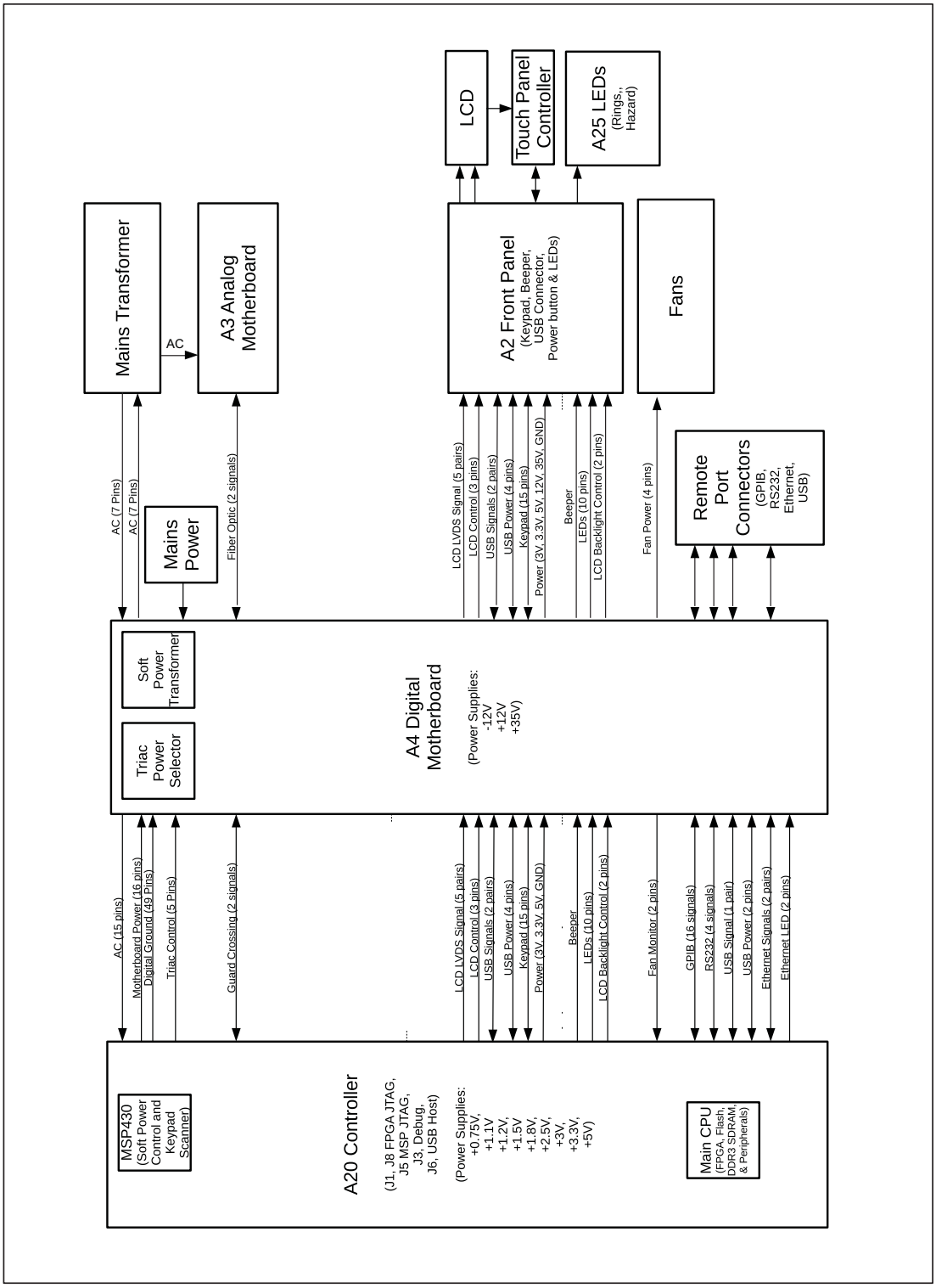

Figure 2-2. Digital Section Block Diagram

원문: Fluke Calibration 5790B 설명서 · 제조사 원문 자료입니다. 사양은 제조사 사정에 따라 변경될 수 있습니다.

System Interconnect Detailed Circuit Description

Digital Motherboard Assembly (A4)

The digital motherboard contains the soft-power circuit, line fuse, a fiber-optic transmitter, and a fiber-optic receiver. It also contains connectors for the transformer assembly (A22), CPU assembly (A20), front panel assembly (A2), and the two 24 V dc fans mounted in the chassis.

The fiber-optic receiver and transmitter provide the serial communication link between the CPU on the unguarded digital motherboard and the regulator/Guard crossing on the guarded analog motherboard. This board also contains GPIB, Ethernet, RS-232, and USB remote port connectors.

Transformer Assembly (A22)

The transformer assembly receives ac line inputs routed through the A4 digital motherboard. This assembly supplies outputs throughout the Product, all of which are routed through the A4 digital motherboard.

The transformer assembly, the filter assembly (A18), and the regulator portion of the regulator/guard crossing assembly (A17) create the system power supply for all analog assemblies.

Analog Motherboard Assembly (A3)

The analog motherboard contains the connectors for all assemblies in the guarded section of the Product. The analog motherboard also contains five relays, a fiber-optic transmitter, a fiber-optic receiver, and a cable for binding post connections.

The fiber-optic transmitter and the fiber-optic receiver provide the serial communication link between the regulator/guard crossing assembly and the CPU assembly on the unguarded digital motherboard.

The cable from the motherboard to the binding posts consists of three insulated wires and four shields.

원문: Fluke Calibration 5790B 설명서 · 제조사 원문 자료입니다. 사양은 제조사 사정에 따라 변경될 수 있습니다.

Digital Section Detailed Circuit Description

Detailed descriptions of each assembly in the digital section are provided next.

CPU Assembly (A20)

The CPU assembly uses a soft-core microprocessor contained within an FPGA (field-programmable gate array), running the µCLinux operating system. It controls local and remote interfaces and serial communications over a fiber-optic link to the crossing portion of the regulator/guard crossing assembly (A17). The guard crossing controls the guarded analog circuitry. This board also includes an MSP430 microcontroller that scans the keyboard and handles softpower control functions.

Front-Panel Assembly (A2)

The front-panel assembly contains the keypad, beeper, and USB port. It attaches to the display, backlight, touch panel, and terminal LED assembly.

Terminal LED Indicator Assembly (A25)

This board contains LED rings that surround the front-panel terminals and the high-voltage hazard LED.

Analog Section Detailed Circuit Description

Detailed descriptions of each assembly in the analog section are provided in this section. Simplified schematics are provided to supplement the text.

Filter Assembly (A18)

The Filter assembly receives ac inputs from the main power transformer secondaries and provides unregulated dc to the regulator/guard crossing assembly (A17) and regulated dc supplies to the DAC assembly.

Regulator/Guard Crossing Assembly (A17)

The Regulator/Guard Crossing assembly (A17) provides two separate functions: voltage regulation for the analog power supplies and digital controller functions for the inguard.

Transfer Assembly (A10)

Figure 2-3 is a block diagram of the A10 Transfer assembly. This assembly contains the transfer switches, 22 V/220 V dividers, precision ac amplifiers, FTS, and associated control and support circuitry. This assembly also contains input selection relays and provides the drive signals for the analog motherboard relays. The 700 V/1000 V divider is located on the analog motherboard.

원문: Fluke Calibration 5790B 설명서 · 제조사 원문 자료입니다. 사양은 제조사 사정에 따라 변경될 수 있습니다.

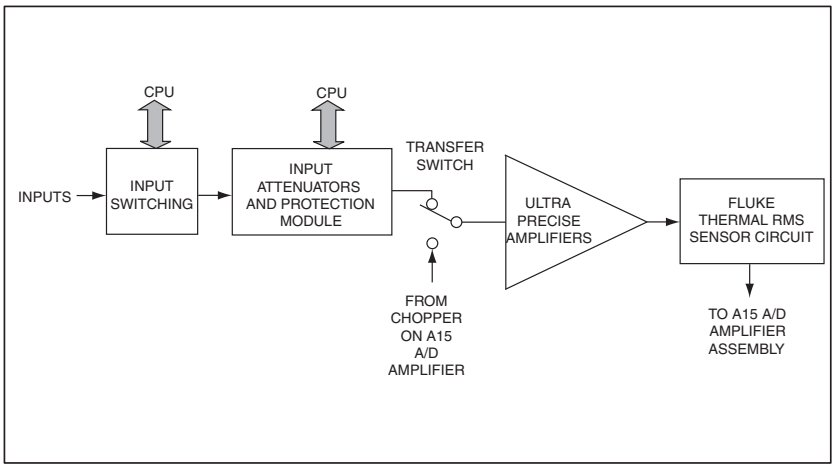

elu007.eps

Figure 2-3. A10 Transfer Assembly Block Diagram

A/D Amplifier Assembly (A15)

The A15 A/D amplifier board contains circuitry for generating the chopped dc reference for the A10 transfer assembly and circuitry for measuring the output of the Fluke thermal sensor circuit, also on the transfer assembly. The chopper circuit provides a symmetrical square wave equal in RMS value to the dc input voltage (0.7 V to 7 V). A square wave is used instead of dc for making the transfers for these reasons:

- The square wave passes through the ac-coupled amplifiers on the wideband board, while dc would be blocked by the coupling caps.
- Errors caused by dc offsets, which add directly to a dc reference, tend to average out with a dual polarity input.

The chopper circuit contains a 2 V divider/dc reference selector that grounds the chopper when not in use. The precision switched-capacitor inverter provides -0.7 V to -7 V from a 0.7 V to 7 V input, which continuously alternates at 400 Hz. This provides a negative reference voltage with low error. The chopper oscillator provides a pair of square waves (50 % duty cycle, 180 degrees out of phase) that clock the chopper switches. The chopper attenuator selects the output level of the chopper by switching in 20 dB and 40 dB attenuators. See Figure 2-4 for a block diagram.

.

원문: Fluke Calibration 5790B 설명서 · 제조사 원문 자료입니다. 사양은 제조사 사정에 따라 변경될 수 있습니다.

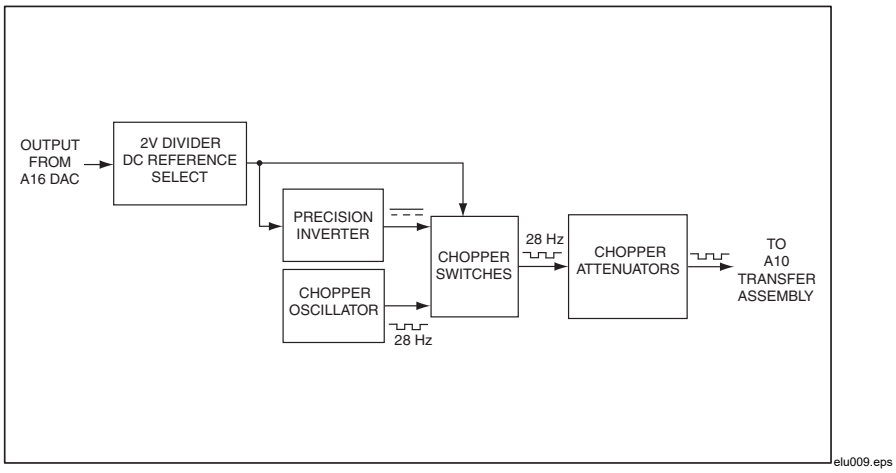

Figure 2-4. Chopper Circuit Block Diagram

The null DAC is set by the CPU to equal the A/D measurement taken with the instrumentation amplifier on the X1 setting (the first pass). This measurement shows on the display as the reading with lower resolution and the U indicator lit. This DAC has a 14-bit resolution, where 0 counts gives 0 V, 3fff hex counts gives +2.2 V full scale.

The instrumentation amplifier amplifies the difference between the output of the null DAC and the output of the FTS circuit on the transfer assembly. The output of the instrumentation amplifier is fed directly into the A/D amplifier. The result of this system is an improved resolution from the A/D IC. The instrumentation amplifier is switched between a unity gain and an X10 configuration.

A five-pole filter attenuates low frequency ripple. See Figure 2-5.

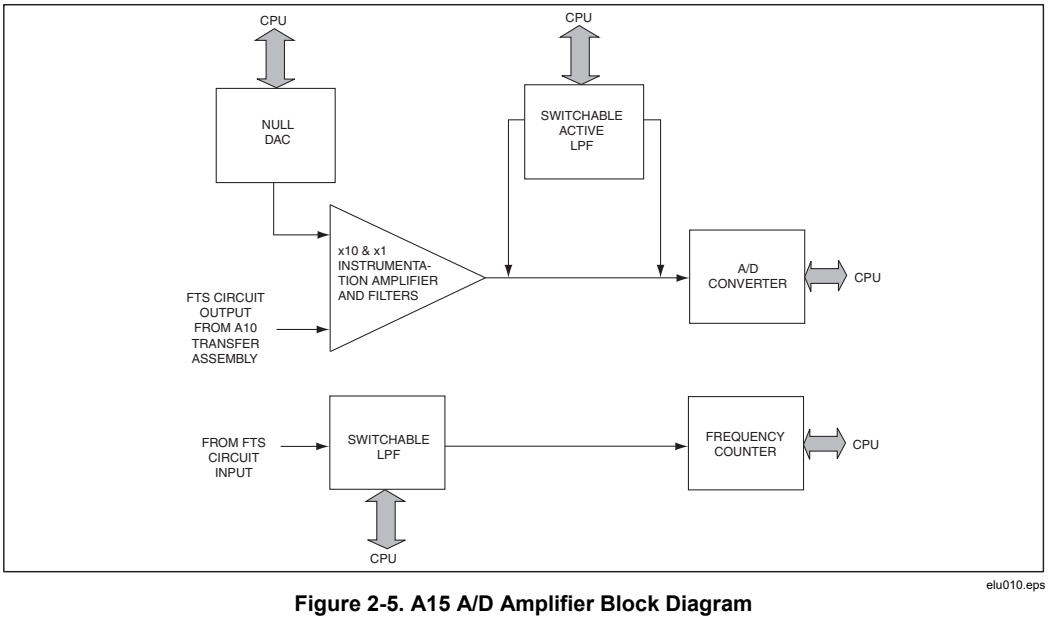

Figure 2-5. A15 A/D Amplifier Block Diagram

원문: Fluke Calibration 5790B 설명서 · 제조사 원문 자료입니다. 사양은 제조사 사정에 따라 변경될 수 있습니다.

DAC Assembly (A16)

The DAC (digital-to-analog converter) provides a digitally adjustable precision dc voltage from 0 V to 11 V. The DAC uses a pulse-width-modulated scheme to vary its output. The block diagram of the DAC assembly is shown in Figure 2-6.

The two inputs of the five-pole filter are two precision square waves with different fixed amplitudes and independently variable duty cycles controlled by software. The filter's first input square wave is called the first channel. It is switched between the reference voltage (13 V) and 0 V.

The filter's second input square wave is called the second channel. It is switched between approximately 0.78 mV and 0 V. Its amplitude is derived by resistively dividing the 13 V reference. This second channel is used for extra resolution.

The filter rejects all AC components of the waveforms above 30 Hz. Since the frequency of the square waves is 190 Hz, the output of the filter is a dc voltage which is the sum of the average voltages of the two waveforms. The Output Stage, which consists of the dc amplifier hybrid and the output buffer, isolates the filter output from the DAC output and gives current drive to the DAC output.

To change the DAC voltage, the average value of the two square waves must be varied. To determine the average value, multiply the waveforms amplitude by its duty cycle. Vary the duty cycle and keep the amplitude fixed to change the DAC voltage.

For example, if the duty cycle of the first channel is 10 % and the second channel 50 %, the overall average voltage would be:

$$(0.1\times 13V)+(0.5\times 0.78mV)=1.300390V$$

The duty cycle resolution is 0.0024 %, which gives a first channel resolution of 0.309 mV and second channel resolution of 18.5 nV.

The duty cycle control circuitry creates the two digital square waves for the first and second channels. These two waveforms are first run through the optocouplers for isolation and then into analog switching and level shifting circuits. These circuits derive the proper signals to switch the input of the filter at the levels explained above.

원문: Fluke Calibration 5790B 설명서 · 제조사 원문 자료입니다. 사양은 제조사 사정에 따라 변경될 수 있습니다.

TS-TL-FLK-051

we measure, we calibrate, we validate.
㈜테솔 · www.tessol.com TS-TL-FLK-051 36 / 172
KOLAS 국제공인교정기관 · ISO/IEC 17025

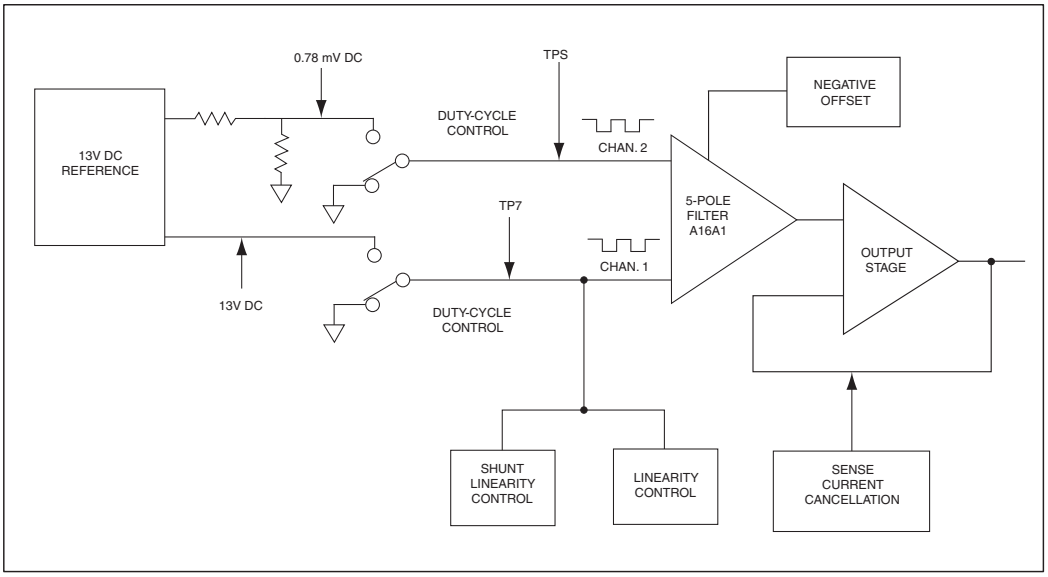

Figure 2-6. A16 DAC Assembly Block Diagram

Wideband Module (A6)

The Wideband option extends the Product operating range to accept signals from 600 µV to 7 V over a frequency range of 10 Hz to 30 MHz for option /3 and 10 Hz to 50 MHz for options /5 and /AF. The input impedance at the front panel WIDEBAND Type ‘N’ connector is 50 Ω on all ranges. Essentially, the wideband assembly takes over the function of the A10 transfer assembly when the Product is in the wideband mode. Refer to Figure 2-7 and the wideband assembly schematic diagram for the remaining theory discussion.

Wideband inputs are made to the WIDEBAND 50 Ω Type “N” connector on the front panel, and the option is activated by pressing the [WBND] key. In wideband mode, eight input ranges are available: 2.2 mV, 7 mV, 22 mV, 70 mV, 220 mV, 700 mV, 2.2 V, and 7 V. Select the ranges the same way as in standard operation. Once the system has settled into the proper range, the displays show the amplitude and the frequency of the input.

The front panel WIDEBAND connector is connected by a cable to the wideband (A6) assembly through board input connector J1. If the input exceeds approximately 14 V pk, then the input protection module protects the circuit from damage. If the input is greater than full scale on the highest range (7 V), but less than the 14 V trip point of the input protection module, the range comparators detect an overrange condition. Digital control of the wideband circuit then clears relay driver U26, dropping out the input relays to open the input path.

원문: Fluke Calibration 5790B 설명서 · 제조사 원문 자료입니다. 사양은 제조사 사정에 따라 변경될 수 있습니다.

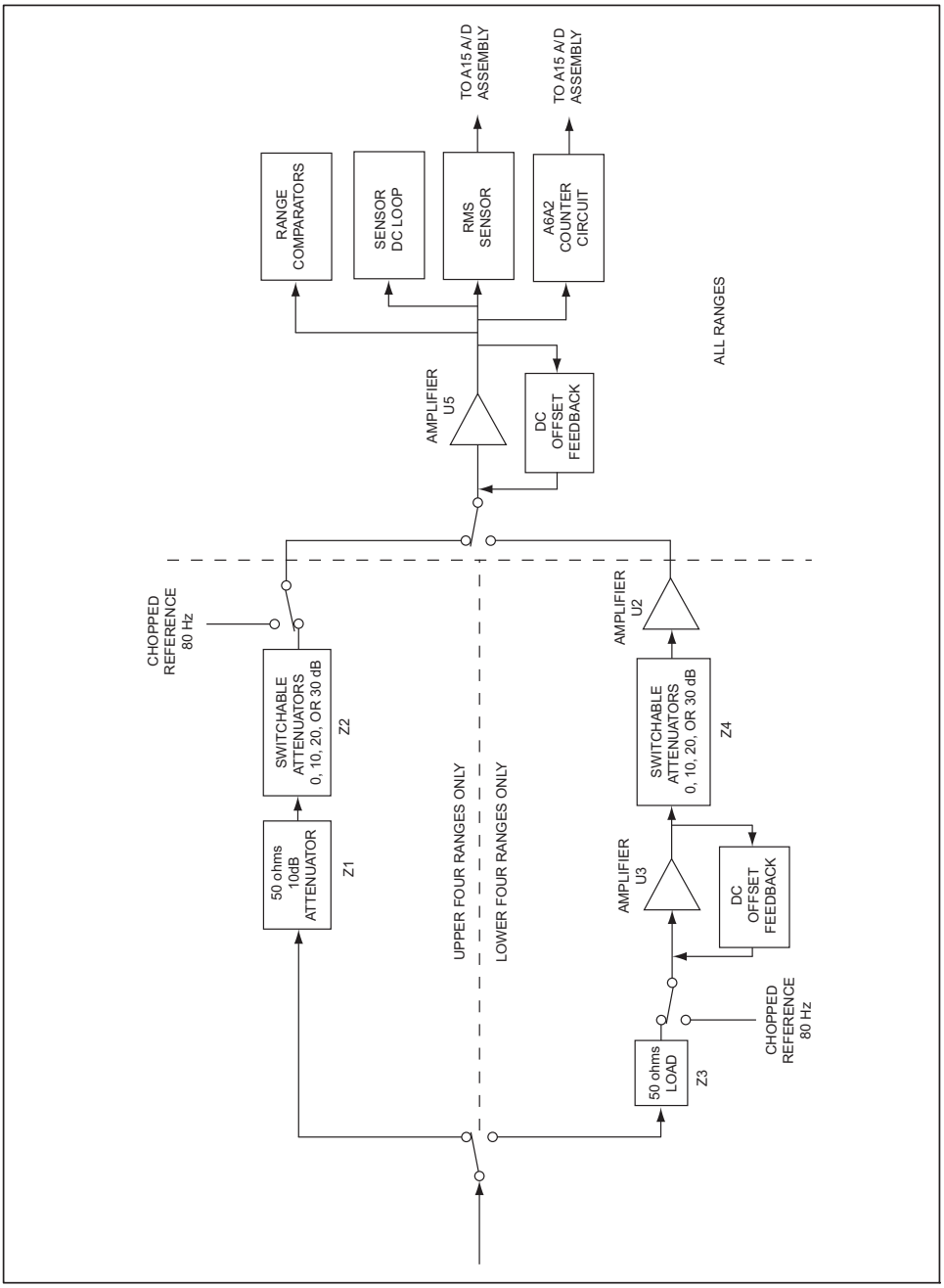

elu012.eps

Figure 2-7. A6 Wideband Assembly Block Diagram

원문: Fluke Calibration 5790B 설명서 · 제조사 원문 자료입니다. 사양은 제조사 사정에 따라 변경될 수 있습니다.

Chapter 3
Calibration Adjustment and Verification

Introduction

This chapter defines the Product calibration methods, then presents step-by-step procedures for calibration adjust and verification of the main input. Apply calibration voltages to either INPUT 1 or INPUT 2. Calibration is valid for both inputs after calibration is complete. Following main input calibration is the procedure to calibrate the WIDEBAND input (only if the Option 5790B/3, Option 5790B/5, or Option 5790B/AF Wideband AC module is installed).

Verification is a procedure you can use to determine calibration status (in or out of tolerance) on recall. Procedures for verifying the main input and Wideband option are presented separately.

Calibration Cycle

The calibration cycle selection determines which set of specifications from Chapter 1 are valid and used for CalShift Reports and for display when the Setup key is pushed. Set the calibration cycle to match the appropriate calibration interval (90 Day, 1 Year, or 2 Year) in the setup menu by selecting **Setup Menu>Instrument setup>Calibration Interval** from the front panel, or use the remote commands as described in Chapters 5 and 6 of the *5790B Operators Manual*.

Calibration Reports

Calibration Reports show the shifts at various input levels and frequencies that are the result of the most recent, or the previous calibration. The report can be saved to a USB drive or retrieved from a host computer through the RS-232, USB device port, Ethernet port, or IEEE-488 interface.

Note

The calibration reports are test reports, not calculations of correction factors to be applied. Do not use the shifts printed on the reports as correction factors.

원문: Fluke Calibration 5790B 설명서 · 제조사 원문 자료입니다. 사양은 제조사 사정에 따라 변경될 수 있습니다.

Save Calibration Reports

Calibration reports can be created and exported to a USB flash drive using remote commands. The subsequent sections describe the reports.

To save a calibration report:

1. Put a flash drive into the front USB port.
2. Execute the "CAL_USB" command. Refer to the Remote Commands section for more information including associated arguments and usage. Once the command is executed, the report starts downloads to the USB drive. It can take up to 2 minutes to complete. Use the *OPC or *OPC? remote command to determine when the download has completed. The report is in comma separated value (CSV) format and can be imported into a spreadsheet program such as Microsoft Excel.
3. Open or print the file from the PC.

Calibration Adjustment Security Passcode

The integrity of Product calibration is protected by a security passcode that must be entered before new calibration constants can be saved to non-volatile memory. This passcode replaces the hardware calibration switches found on previous generation products such as the Fluke 5790A.

If the passcode has not been entered, the Product is secured. Once the passcode is entered, the Product is unsecured. The Product secures itself when it is reset. The Product can be unsecured at any time over the remote interface with the CAL_SECURE command or by entering the passcode. The front panel prompts for the passcode to unsecure the Product before it can accept new values to be eventually stored. The passcode contains 1 to 8 decimal digits. The Product is shipped with the passcode set to "5790". To change the passcode, touch **Setup Menu>Calibration>Change Calibration Passcode**. The Product prompts for the current passcode and then the new passcode. The passcode can also be changed over the remote interface with the CAL_PASSWD command. If the passcode for a particular Product is lost, contact Fluke Customer Support. See *How to Contact Fluke Calibration*.

Full or Range Calibration Adjustment

When a calibration adjustment of the main input is performed, complete calibration adjustment of the dc measurement function first because subsequent ac calibration relies on the Product dc measurement accuracy. Calibration adjustment of both the dc and the ac functions is called full calibration adjustment.

Instead of full calibration adjustment, you can select the range calibration, which presents display prompts for adjusting the dc or ac functions of a single input range. This allows you to repeat portions of a just-completed calibration adjustment. You can use the “Skip Step” softkey to redo one or a few points, leaving the rest of the calibration adjustment points unchanged. Once you select the input and range, use the selected range softkey in the calibration screen to proceed with the calibration steps exactly as explained under *Calibrating the Main Input* or *Calibrating the WIDEBAND Input*.

원문: Fluke Calibration 5790B 설명서 · 제조사 원문 자료입니다. 사양은 제조사 사정에 따라 변경될 수 있습니다.

we measure, we calibrate, we validate.
㈜테솔 · www.tessol.com TS-TL-FLK-051 40 / 172
KOLAS 국제공인교정기관 · ISO/IEC 17025

TS-TL-FLK-051

Automating Calibration Adjustment and Verification

Fluke Calibration uses an automated calibration adjustment and calibration verification system to accomplish the procedures described here. To minimize time spent on repetitive measurements and calculations, you can automate the following procedures to the greatest extent possible. Chapters 5 and 6 of the User document the remote interfaces and commands that can help you with the calibration.

Note

A technical paper describes the system in use at Fluke Calibration to calibrate and verify the 5790A: Calibration and Traceability of a Fully Automatic AC Measurement Standard, by David Deaver, presented in the NCSL Workshop and Symposium, 1991. Reprints are available from Fluke Calibration.The 5790B automated calibration system is based on the 5790A technical paper.

How Calibration Memory is Organized

Three sets of calibration constants are maintained in memory. Associated with each set of constants is the date and ambient temperature of the calibration. Figure 3-1 shows the three sets of calibration constants and how they are purged following a calibration store operation. The three sets of constants are described below, from newest to oldest:

1. The “active” set. This is a volatile memory that normally contains a copy of the contents of the stored set of calibration constants. The only time it contains different data is after you perform calibration of one or more ranges, but before you store the updated constants. After calibration, you must either store or discard the updated constants before you resume normal operation.
2. The “stored” set. At each power up, the contents of this nonvolatile memory is copied into the active set memory. Therefore, the stored set is identical to the active set until you perform a new calibration.
3. The “old” set. Although it is no longer in use, the previous set of calibration constants is saved in nonvolatile memory. This set is kept in order to make comparisons in Cal Shift reports.

원문: Fluke Calibration 5790B 설명서 · 제조사 원문 자료입니다. 사양은 제조사 사정에 따라 변경될 수 있습니다.

TS-TL-FLK-051

we measure, we calibrate, we validate.
㈜테솔 · www.tessol.com TS-TL-FLK-051 41 / 172
KOLAS 국제공인교정기관 · ISO/IEC 17025

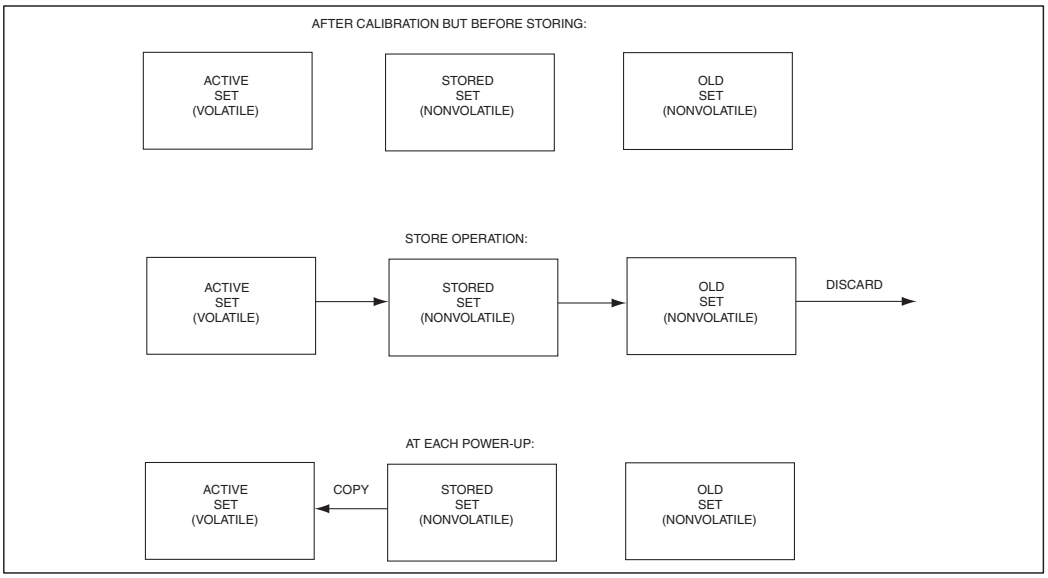

Figure 3-1. Calibration Memory Organization

Calibration

The subsequent information describes how to calibrate the Product to external standards. Substitute either manual or automated equivalent equipment and methods for these calibration procedures, after taking in consideration product specifications and substituted measurement equipment uncertainty. During calibration, select the fast, medium, or slow filter.

Calibrating (Calibration Adjustment) the Main Input

Calibrate INPUT1 or INPUT2 by using the following sequence of procedures:

1. Characterize the dc source.
2. Perform dc calibration adjustment.
3. Perform ac calibration adjustment.

Throughout the dc and ac calibration adjustment, the control display prompts you with the next step and informs you about the progress of calibration. The cable connections for the dc and ac calibration are kept as similar as possible so that a minimum number of mechanical changes are required during the procedure. INPUT 1 and INPUT 2 are equivalent. Calibration adjustment of INPUT 1 or INPUT 2 will result in adjustment of the product for use of either INPUT.

원문: Fluke Calibration 5790B 설명서 · 제조사 원문 자료입니다. 사양은 제조사 사정에 따라 변경될 수 있습니다.

Characterizing the DC Source

To meet the test uncertainty requirements for the main input dc calibration, first characterize (calibrate to a higher uncertainty than the published specifications) the dc function of the 5730A at the required points. Table 3-1 lists the equipment required for dc source characterization. Table 3-2 shows the test record in which you will record the results of the following procedure. Make a photocopy of this table before you proceed.

Table 3-1. Equipment Required for DC Characterization

Equipment	Manufacturer and Model	Minimum Use Specifications
Multifunction Calibrator to Characterize for dc calibration	Fluke Calibration 5730A	0 - 1000 V dc, short term stability better than 1 ppm
Reference Divider	Fluke 752A	Uncertainty ±0.5 ppm @ 100:1, ±0.2 ppm @ 10:1
Null Detector	Fluke 8508A	0.1 µV resolution
10 V dc Reference Standard	Fluke Calibration 732A or B	10 V Uncertainty ±1 ppm

⚠⚠ Warning

To prevent possible electrical shock, fire, or personal injury, do not touch any exposed conductors. Some steps in the subsequent procedure involve calibrator outputs at lethal voltages.

Self-Calibrate a Fluke 752A Divider with a Fluke 8508A as the Null Detector

1. Connect the 5730A, 752A, and 8508A as shown in Figure 3-3.
2. Set the 8508A to the 200 mV dc voltage range at 7 digits. The filter is “ON” and “FAST” and internal guard is selected (external guard not selected). FAST mode updates the reading every 1.5 seconds. This lets the reading track the adjustments but the reading changes frequently and is somewhat noisy. FAST can be turned off so that the readings are updated every 5.3 seconds.
3. Set the 752A MODE switch to CAL and the CALIBRATE switch to 10:1 +.
4. Wait for the reading to settle (this can take several minutes); zero the meter with the Zero Rng button.
5. Connect the 5730A, 752A, and 8508A as shown in Figure 3-2.
6. Set the 5730A to output 20 V.
7. Wait for the reading to settle (this can take several minutes); note the reading. Set the CALIBRATE switch to 10:1 – and note the reading.
8. If the readings in step 7 are not the same, adjust the BALANCE control until they are the same. (see note 4 below).
9. Set the CALIBRATE switch to 10:1+. Adjust the 10:1 CALIBRATE adjustment until the reading is 0 ±0.5 µV.
10. Set the 752A CALIBRATE switch to 100:1 +.
11. Wait for the reading to settle (this can take several minutes); note the reading. Set the CALIBRATE switch to 100:1- and note the reading.

원문: Fluke Calibration 5790B 설명서 · 제조사 원문 자료입니다. 사양은 제조사 사정에 따라 변경될 수 있습니다.

12. If the readings in step 14 and 15 differ by more than 0.5 µV the BALANCE control is not properly adjusted and the Self Calibration process has to be repeated from step 1.
13. Set the CALIBRATE switch to 100:1+. Adjust the 100:1 CALIBRATE adjustment until the reading is 0 ±0.5 µV.
14. Push STANDBY on the 5730A.
15. Set the CALIBRATE switch to OPERATE and the MODE switch to the necessary position.
16. This completes the self-calibration of the 752A.

Note

1. *The 10:1 adjustment must be done before the 100:1 adjustment.*
2. *Follow the "Self-Calibrate a Fluke 752A Divider with a Fluke 8508A as the Null Detector" procedure. Adjust the 752A to within 0.09 µV/V or less of the nominal ratio for 10:1 and 0.18 µV/V or less for 100:1.*
3. *Be sure the 752A is well stabilized in a constant temperature environment before calibration starts. The instrument stays calibrated as long as the temperature remains constant.*
4. *It can be difficult to adjust the BALANCE control for a difference of exactly 0 µV but it is not necessary to get it to exactly zero to get good results. Instead, adjust the BALANCE for as close to zero as is practical but a difference as large as 1 µV is still acceptable. Then adjust the 10:1 or 100:1 CALIBRATION adjustment for a reading that is the same for the switch in the 10:1+ position as the 10:1- position but opposite sign. For example, if the BALANCE difference is 1 µV, then adjust the appropriate CALIBRATION adjustment until one switch position is say +0.5 µv and the other position is -0.5 µV. These two readings do not have to be the same to meet the ±0.5 µV requirement given in the procedure. To determine if the adjustment is close enough:*

   Take the reading in the 10:1+ position and add it to the reading in the 10:1- position and then divide the result by two. For example, if the reading in the 10:1+ position is +0.75 µV and in the 10:1- position is -0.25 µV then: (+0.75 µV+(-0.25 µV))/2 = +0.25 µV. This meets the requirement for an adjustment to within ±0.5 µV.
5. *Using a DMM takes longer and more care is necessary to self-calibrate a 752A than using a Fluke 845, but it can still be done in a reasonable time once you get used to the new technique. You need to determine which settings of the 8508A work best. Settings such as the number of digits (7 or 8), using FAST, or using the FILTER, can be tried until a combination is found that works best. It may be that one set of settings is found to be best for the initial adjustments and then a change in the settings for the final adjustment is necessary. For example, it may work best to set up the meter to respond quickly to a change in voltage to get the adjustments close then change to a setting that takes longer per reading but has less scatter for the final readings.*

원문: Fluke Calibration 5790B 설명서 · 제조사 원문 자료입니다. 사양은 제조사 사정에 따라 변경될 수 있습니다.

TS-TL-FLK-051

we measure, we calibrate, we validate.
㈜테솔 · www.tessol.com TS-TL-FLK-051 44 / 172
KOLAS 국제공인교정기관 · ISO/IEC 17025

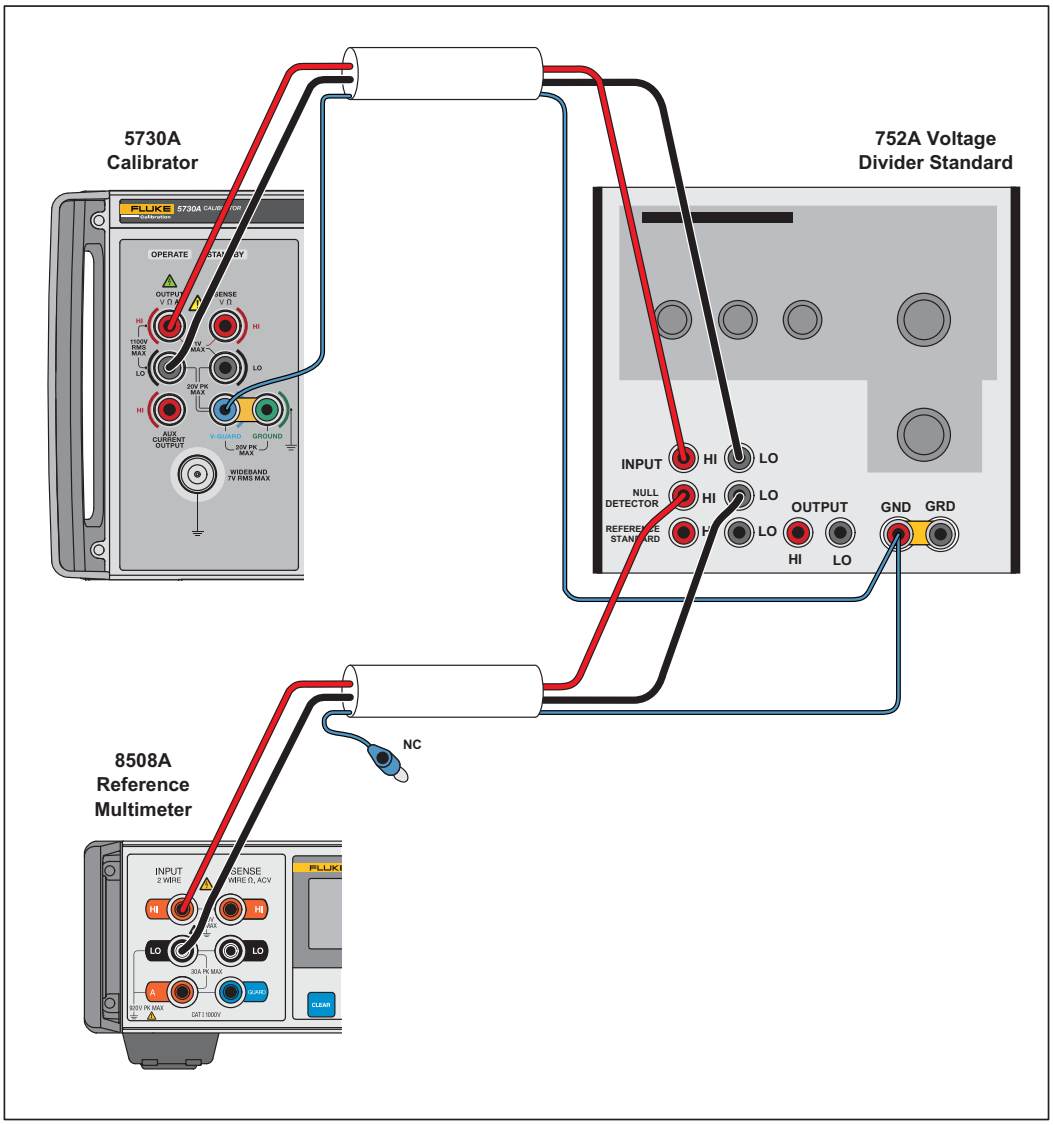

hhp305.eps

Figure 3-2. Zero Null Detector Connection

DC Voltage Source Characterization Values

1. Self-Calibrate the reference divider according to the procedure in the *Self-Calibrate a Fluke 752A Divider with a Fluke 8508A as the Null Detector* section above.
2. Connect the reference divider and the 8508A as shown in Figure 3-3. The short on the INPUT and REFERENCE STANDARD inputs of the reference divider must be a low thermal EMF connection. Fluke Calibration recommends a piece of copper wire for this.

원문: Fluke Calibration 5790B 설명서 · 제조사 원문 자료입니다. 사양은 제조사 사정에 따라 변경될 수 있습니다.

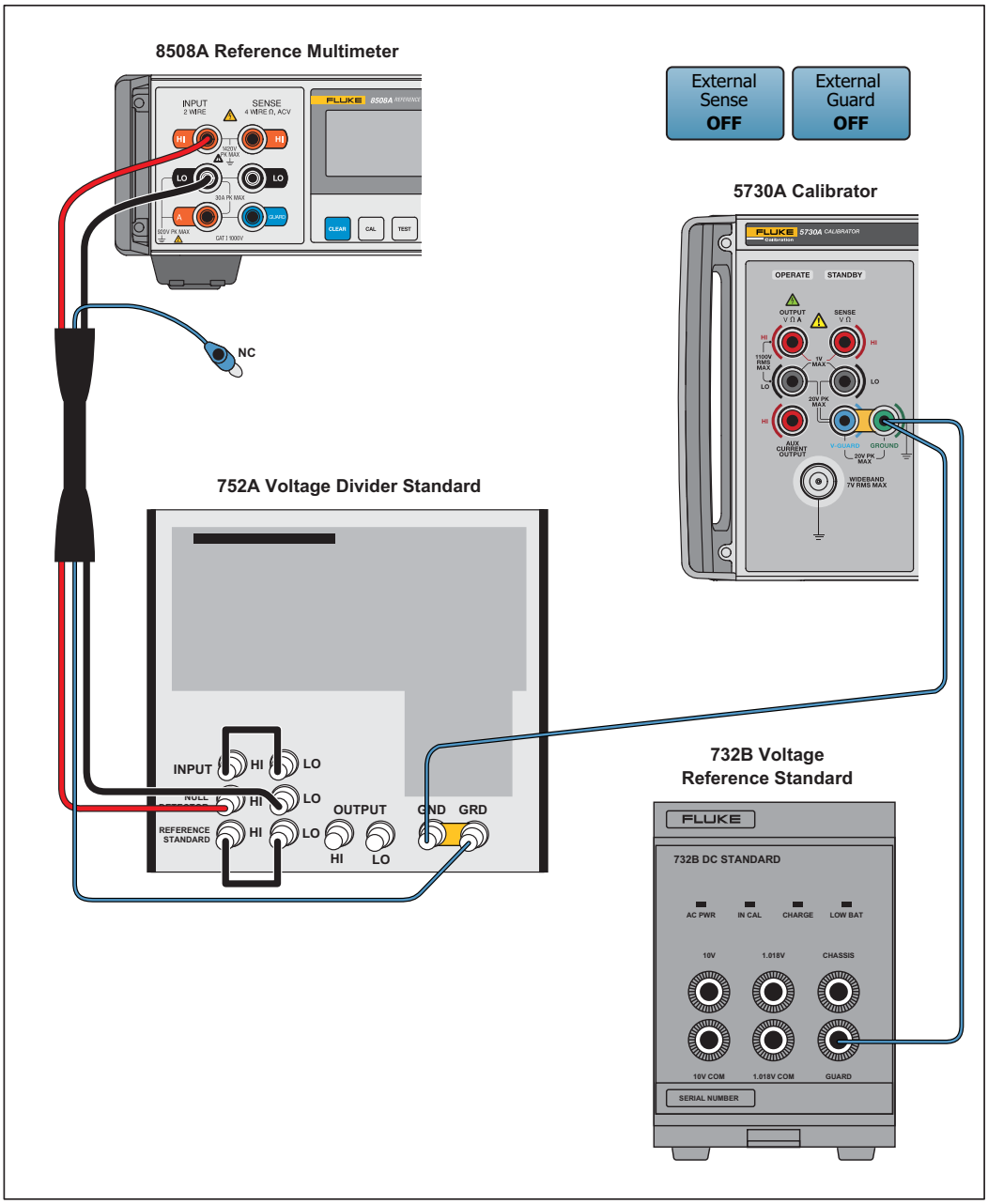

hhp301.eps

Figure 3-3. Zero Null Detector Connections

3. Set the reference divider to 0.1 V and the mode switch to OPERATE.
4. Set the 8508A to dc V, 200 mV range, 7 digits, filter IN and "FAST" mode. Make sure the 8508A is on internal guard (external guard not selected).
5. Wait for the reading to settle and then push the Zero Rng button to zero the meter.
6. Remove the two shorts from the reference divider and connect the 732B 10 V Reference Standard and the 5730A as shown in Figure 3-4.

원문: Fluke Calibration 5790B 설명서 · 제조사 원문 자료입니다. 사양은 제조사 사정에 따라 변경될 수 있습니다.

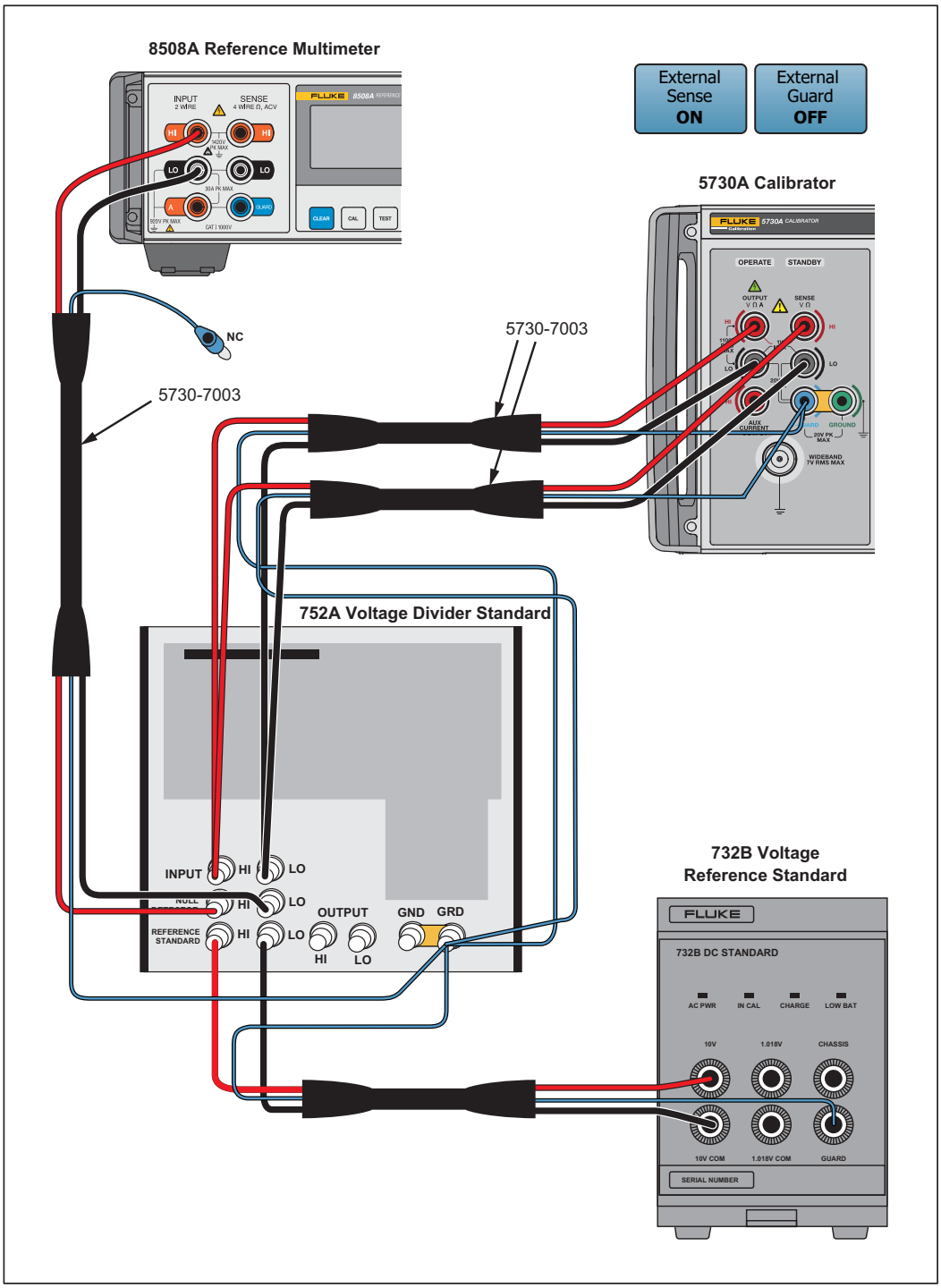

Figure 3-4. DC Voltage Source Characterization

원문: Fluke Calibration 5790B 설명서 · 제조사 원문 자료입니다. 사양은 제조사 사정에 따라 변경될 수 있습니다.

7. Enter the Reference Standard Voltage (Vstd) into Table 3-2.
8. Set the 5730A to the first test voltage listed in Table 3-2 and set the reference divider and the reference standard polarity to those given in the table. To change the polarity of the reference standard, reverse the leads to the HI and LO output. With the exception of the 220 mV range, all other characterization points use the External Sense of the calibrator.

$$V = (Polarity) * (V_{std}) * DividerSetting * 0.1$$

The formula is used to calculate the output voltage of the Product equivalent to characterized nominal output relative to a reference cell (Fluke 732B or 732A) and a reference divider (Fluke 752A).

Polarity is “+1” for positive and “-1” for negative.

V_{std} is the output of Fluke 732B or 732A reference cell.

DividerSetting – from the table below for each characterization level.

9. Push OPERATE.
10. Wait at least 1 minute for the reading to settle and record the reading in Table 3-2.
11. Adjust the 5730A output voltage to achieve the DMM reading within the DMM Final Null limit in Table 3-2.
12. Record the 5730A Error Display indication in Table 3-2 under the column "5730A Error Display Indication to obtain Characterized Nominal Output", with opposite sign.
13. Repeat steps 8 to 12 for the rest of the voltages given in Table 3-2. See the note in *DC Zero Test* about locking the range.

원문: Fluke Calibration 5790B 설명서 · 제조사 원문 자료입니다. 사양은 제조사 사정에 따라 변경될 수 있습니다.

we measure, we calibrate, we validate.
㈜테솔 · www.tessol.com TS-TL-FLK-051 48 / 172
KOLAS 국제공인교정기관 · ISO/IEC 17025

TS-TL-FLK-051

Table 3-2. DC Characterization Test Record

10 V Std. Polarity	Divider Setting	Character-ization Range	Character-ization Level	DMM Final Null (±µV)	5730A Error Display Indication to obtain Characterized Nominal Output (µV/V)
POS	0.1	220 mV	+100 mV	0.1	
POS	0.1	2.2 V	+100 mV	0.1	
NEG	0.1	220 mV	-100 mV	0.1	
NEG	0.1	2.2 V	-100 mV	0.1	
NEG	1	2.2 V	-1 V	0.1	
NEG	1	11 V	-1 V	0.1	
POS	1	2.2 V	+1 V	0.1	
POS	1	11 V	+1 V	1	
POS	10	11 V	+10 V	1	
POS	10	22 V	+10 V	1	
POS	10	220 V	+10 V	1	
NEG	10	11 V	-10 V	1	
NEG	10	22 V	-10 V	1	
NEG	10	220 V	-10 V	1	
NEG	100	220 V	-100 V	1	
NEG	100	1100 V	-100 V	1	
POS	100	220 V	+100 V	1	
POS	100	1100 V	+100 V	1	
POS	1000	1100 V	+1000 V	1	
NEG	1000	1100 V	-1000 V	1	

원문: Fluke Calibration 5790B 설명서 · 제조사 원문 자료입니다. 사양은 제조사 사정에 따라 변경될 수 있습니다.

DC Calibration Adjustment

Table 3-3 lists the equipment required for dc calibration adjustment of the main input. Proceed as follows to perform dc calibration of the main input, which is always the prerequisite for ac calibration adjustment. Use the 5730A you characterized in the previous procedure as the dc source.

Table 3-3. Equipment Required for Main Input DC Calibration

Equipment	Manufacturer and Model
Multifunction Calibrator	Fluke Calibration 5730A*
50 Ω Type “N” Coaxial Tee Male-Male-Male	Amphenol 4850 or equivalent
50 Ω Type “N” Female to Double Banana Plug Adapter	Pomona Model 1740 or Equivalent
Binding Posts to 50 Ω Type “N” Male Adapter	Pomona Model 1796 or Equivalent
Low-Thermal Test Leads	Fluke 5440B-7002 or equivalent (two sets)
*: The 5730A must be characterized for dc using the procedure in this section.	

1. Set up the equipment as shown in Figure 3-5. A shielded twisted pair is recommended for the 5730A SENSE leads.

Note

Thermal emf errors can adversely affect ac-dc transfers used in the subsequent procedures. To minimize thermal emf errors, use low thermal emf cables and connectors and avoid changing the temperature of any connection during a procedure. It typically takes five minutes to thermally stabilize a connection after it has been touched.

원문: Fluke Calibration 5790B 설명서 · 제조사 원문 자료입니다. 사양은 제조사 사정에 따라 변경될 수 있습니다.

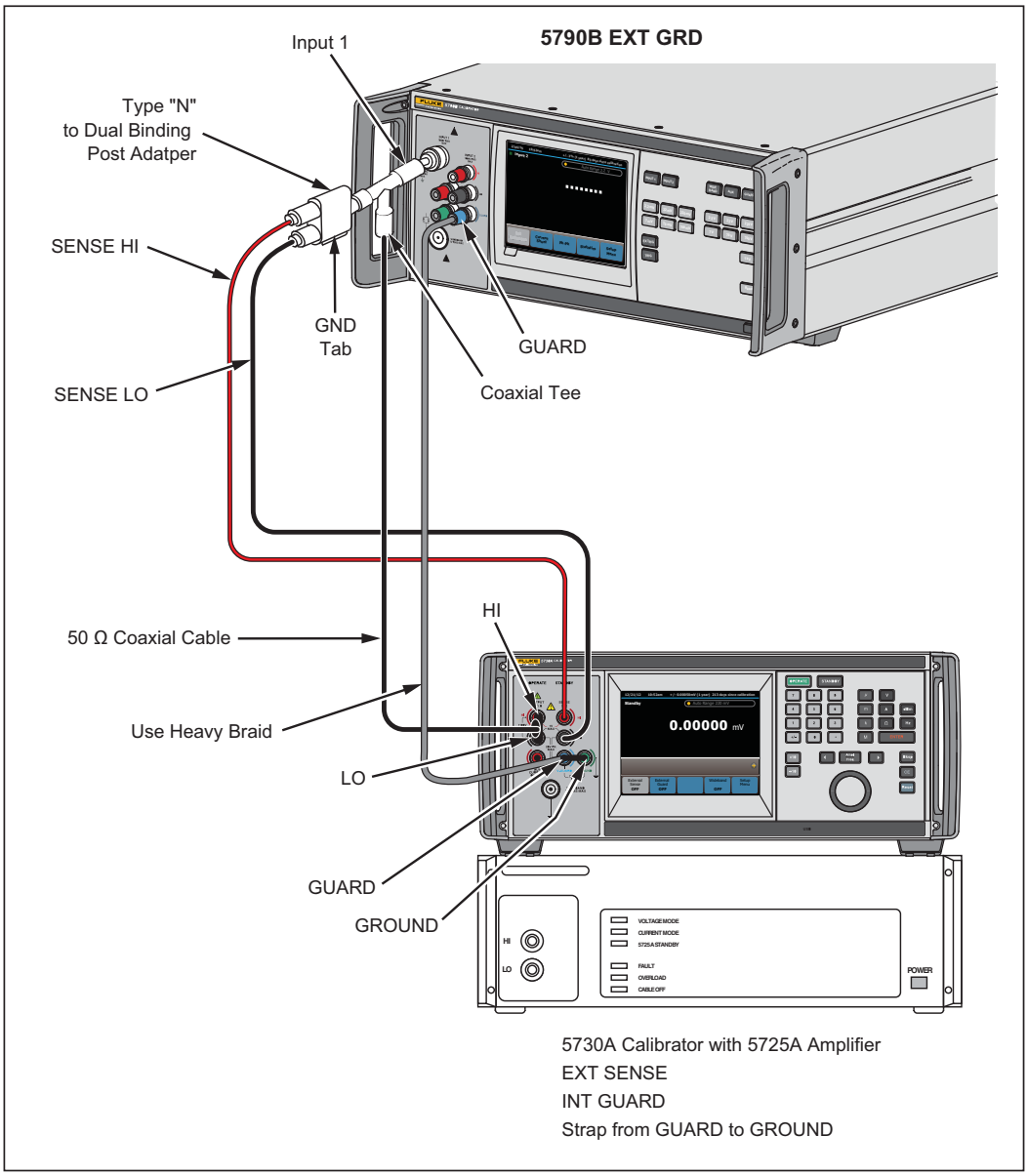

elu020.eps

Figure 3-5. DC Calibration Test Setup

원문: Fluke Calibration 5790B 설명서 · 제조사 원문 자료입니다. 사양은 제조사 사정에 따라 변경될 수 있습니다.

2. Turn on the Product and 5730A/5725A and allow a 30-minute warmup time.
3. Set the 5730A to EXT SENSE. Verify that the shorting strap is connected between GUARD and GROUND. Set the Product to EXT GUARD.
4. Select INPUT 1 so that its indicator ring is lit up, then select **Setup Menu>Calibration>Adjust DC All Main**. The display changes to indicate first dc calibration step.
5. Set the 5730A to nominal, then use the knob to adjust for the error display you recorded in Table 3-2. The dc voltage characterization is performed at cardinal points only. The following rules apply when using the characterization record for this section: for values that are not characterized and there is only one characterization point for the applicable 5730A range, use the same error display as in the characterization record. For calibration adjust point that is between two characterized points of the 5730A, use linear interpolation. Set the 5730A to operate. When the U (unsettled) indicator on the 5730A goes out, push [Continue].
6. At each step you accept the default value by pushing [Continue]. You do this because you have already applied your correction in the adjusted 5730A setting. The display tells you that the calibration step is in progress and informs you with a beep when the step is complete.
7. When the Product completes the step, the next dc step which requires -2 V dc is presented on the display. Change the 5730A setting accordingly and do the calibration step as in the previous two steps.

⚠ ⚠ Warning

Some steps in the remainder of this procedure require application of lethal voltages. Use extreme caution to avoid contact with live conductors. Set the calibrator to standby and verify that voltage has returned to zero immediately after each high voltage calibration step is finished.

Note

For the 200 mV points and below, remove the external sense leads and set the 5730A to INT SENSE.

8. Follow the Product prompts to continue until the dc calibration is done. Table 3-4 lists the steps in calibration of the main input. The 1000 V range is the last dc calibration step.

원문: Fluke Calibration 5790B 설명서 · 제조사 원문 자료입니다. 사양은 제조사 사정에 따라 변경될 수 있습니다.

Table 3-4. Calibration Steps in Calibration Adjustment

Step Name	Voltage to Apply	Uncertainty of the characterized Source (µV/V)	Purpose of Calibration Step
Basic dc	+2 V dc	3	Calibrates DACs and thermal sensor. (This is the unscaled range)
Sensor turnover −2.0	-2 V dc	3	Corrects dc turnover error
Sensor turnover +0.7 Sensor turnover −0.7	+0.7 V dc -0.7 V dc	5	Corrects turnover error of the RMS sensor at minimum scale. After the -0.7 V step, internally calibrates the range zeros
2.2 mV Positive dc 2.2 mV Negative dc	+2 mV dc -2 mV dc	1000	Establishes gain and dc offset for the 2.2 mV range
7 mV Positive dc 7 mV Negative dc	+6 mV dc -6 mV dc	350	Establishes gain and dc offset for the 7 mV range
22 mV Positive dc 22 mV Negative dc	+20 mV dc -20 mV dc	100	Establishes gain and dc offset for the 22 mV range
70 mV Positive dc 70 mV Negative dc	+60 mV dc -60 mV dc	35	Establishes gain and dc offset for the 70 mV range
220 mV Positive dc 220 mV Negative dc	+200 mV dc -200 mV dc	10	Establishes gain and dc offset for the 220 mV range
700 mV Positive dc 700 mV Negative dc	+600 mV dc -600 mV dc	5	Establishes gain and dc offset for the 700 mV range
2.2 V Positive dc 2.2 V Negative dc	+2 V dc -2 V dc	3	Establishes gain and dc offset for the 2.2 V range
7 V Positive dc 7 V Negative dc	+6 V dc -6 V dc	3	Establishes gain and dc offset for the 7 V range
22 V Positive dc 22 V Negative dc	+20 V dc -20 V dc	3	Establishes gain and dc offset for the 22 V range
70 V Positive dc 70 V Negative dc	+60 V dc -60 V dc	3	Establishes gain and dc offset for the 70 V range
220 V Positive dc 220 V Negative dc	+200 V dc -200 V dc	3	Establishes gain and dc offset for the 220 V range
700 V Positive dc 700 V Negative dc	+600 V dc -600 V dc	3	Establishes gain and dc offset for the 700 V range
1000 V Positive dc 1000 V Negative dc	+1000 V dc -1000 V dc	3	Establishes gain and dc offset for the 1000 V range

원문: Fluke Calibration 5790B 설명서 · 제조사 원문 자료입니다. 사양은 제조사 사정에 따라 변경될 수 있습니다.

Step Name	Voltage to Apply	Purpose of Calibration Step
LF (10 Hz) Linearity LF (10 Hz) Linearity	2 V RMS, 10 Hz 600 mV RMS, 10 Hz	Generates a correction for thermal sensor non-linearity at low F and f
2.2 mV AC 10 Hz 2.2 mV AC 100 Hz 2.2 mV AC 1 kHz 2.2 mV AC 10 kHz 2.2 mV AC 20 kHz 2.2 mV AC 50 kHz 2.2 mV AC 100 kHz 2.2 mV AC 300 kHz 2.2 mV AC 500 kHz 2.2 mV AC 800 kHz 2.2 mV AC 1 MHz	2 mV RMS, 10 Hz 2 mV RMS, 100 Hz 2 mV RMS, 1 kHz 2 mV RMS, 10 kHz 2 mV RMS, 20 kHz 2 mV RMS, 50 kHz 2 mV RMS, 100 kHz 2 mV RMS, 300 kHz 2 mV RMS, 500 kHz 2 mV RMS, 800 kHz 2 mV RMS, 1 MHz	Generates flatness calibration data for the 2.2 mV range
7 mV AC 10 Hz 7 mV AC 100 Hz 7 mV AC 1 kHz 7 mV AC 10 kHz 7 mV AC 20 kHz 7 mV AC 50 kHz 7 mV AC 100 kHz 7 mV AC 300 kHz 7 mV AC 500 kHz 7 mV AC 800 kHz 7 mV AC 1 MHz	6 mV RMS, 10 Hz 6 mV RMS, 100 Hz 6 mV RMS, 1 kHz 6 mV RMS, 10 kHz 6 mV RMS, 20 kHz 6 mV RMS, 50 kHz 6 mV RMS, 100 kHz 6 mV RMS, 300 kHz 6 mV RMS, 500 kHz 6 mV RMS, 800 kHz 6 mV RMS, 1 MHz	Generates flatness calibration data for the 7 mV range
22 mV AC 10 Hz 22 mV AC 100 Hz 22 mV AC 1 kHz 22 mV AC 10 kHz 22 mV AC 20 kHz 22 mV AC 50 kHz 22 mV AC 100 kHz 22 mV AC 300 kHz 22 mV AC 500 kHz 22 mV AC 1 MHz	20 mV RMS, 10 Hz 20 mV RMS, 100 Hz 20 mV RMS, 1 kHz 20 mV RMS, 10 kHz 20 mV RMS, 20 kHz 20 mV RMS, 50 kHz 20 mV RMS, 100 kHz 20 mV RMS, 300 kHz 20 mV RMS, 500 kHz 20 mV RMS, 1 MHz	Generates flatness calibration data for the 22 mV range
70 mV AC 10 Hz 70 mV AC 100 Hz 70 mV AC 1 kHz 70 mV AC 10 kHz 70 mV AC 20 kHz 70 mV AC 50 kHz 70 mV AC 100 kHz 70 mV AC 300 kHz 70 mV AC 500 kHz 70 mV AC 1 MHz	60 mV RMS, 10 Hz 60 mV RMS, 100 Hz 60 mV RMS, 1 kHz 60 mV RMS, 10 kHz 60 mV RMS, 20 kHz 60 mV RMS, 50 kHz 60 mV RMS, 100 kHz 60 mV RMS, 300 kHz 60 mV RMS, 500 kHz 60 mV RMS, 1 MHz	Generates flatness calibration data for the 70 mV range
220 mV AC 10 Hz 220 mV AC 100 Hz 220 mV AC 1 kHz	200 mV RMS, 10 Hz 200 mV RMS, 100 Hz 200 mV RMS, 1 kHz	Generates flatness calibration data for the 220 mV range

원문: Fluke Calibration 5790B 설명서 · 제조사 원문 자료입니다. 사양은 제조사 사정에 따라 변경될 수 있습니다.

Step Name	Voltage to Apply	Purpose of Calibration Step
220 mV AC 10 kHz 220 mV AC 20 kHz 220 mV AC 50 kHz 220 mV AC 100 kHz 220 mV AC 300 kHz 220 mV AC 500 kHz 220 mV AC 1 MHz	200 mV RMS, 10 kHz 200 mV RMS, 20 kHz 200 mV RMS, 50 kHz 200 mV RMS, 100 kHz 200 mV RMS, 300 kHz 200 mV RMS, 500 kHz 200 mV RMS, 1 MHz	
700 mV AC 10 Hz 700 mV AC 100 Hz 700 mV AC 1 kHz 700 mV AC 10 kHz 700 mV AC 20 kHz 700 mV AC 50 kHz 700 mV AC 100 kHz 700 mV AC 300 kHz 700 mV AC 500 kHz 700 mV AC 1 MHz	600 mV RMS, 10 Hz 600 mV RMS, 100 Hz 600 mV RMS, 1 kHz 600 mV RMS, 10 kHz 600 mV RMS, 20 kHz 600 mV RMS, 50 kHz 600 mV RMS, 100 kHz 600 mV RMS, 300 kHz 600 mV RMS, 500 kHz 600 mV RMS, 1 MHz	Generates flatness calibration data for the 700 mV range
2.2 V AC 10 Hz 2.2 V AC 100 Hz 2.2 V AC 1 kHz 2.2 V AC 10 kHz 2.2 V AC 20 kHz 2.2 V AC 50 kHz 2.2 V AC 100 kHz 2.2 V AC 300 kHz 2.2 V AC 500 kHz 2.2 V AC 1 MHz	2 V RMS, 10 Hz 2 V RMS, 100 Hz 2 V RMS, 1 kHz 2 V RMS, 10 kHz 2 V RMS, 20 kHz 2 V RMS, 50 kHz 2 V RMS, 100 kHz 2 V RMS, 300 kHz 2 V RMS, 500 kHz 2 V RMS, 1 MHz	Generates flatness calibration data for the 2.2 V range
7 V AC 100 Hz 7 V AC 1 kHz 7 V AC 10 kHz 7 V AC 20 kHz 7 V AC 50 kHz 7 V AC 100 kHz 7 V AC 300 kHz 7 V AC 500 kHz 7 V AC 800 kHz 7 V AC 1 MHz	6 V RMS, 100 Hz 6 V RMS, 1 kHz 6 V RMS, 10 kHz 6 V RMS, 20 kHz 6 V RMS, 50 kHz 6 V RMS, 100 kHz 6 V RMS, 300 kHz 6 V RMS, 500 kHz 6 V RMS, 800 kHz 6 V RMS, 1 MHz	Generates flatness calibration data for the 7 V range
22 V AC 100 Hz 22 V AC 1 kHz 22 V AC 10 kHz 22 V AC 20 kHz 22 V AC 50 kHz 22 V AC 100 kHz 22 V AC 300 kHz 22 V AC 500 kHz 22 V AC 1 MHz	20 V RMS, 100 Hz 20 V RMS, 1 kHz 20 V RMS, 10 kHz 20 V RMS, 20 kHz 20 V RMS, 50 kHz 20 V RMS, 100 kHz 20 V RMS, 300 kHz 20 V RMS, 500 kHz 20 V RMS, 1 MHz	Generates flatness calibration data for the 22 V range
70 V AC 100 Hz 70 V AC 1 kHz 70 V AC 10 kHz	60 V RMS, 100 Hz 60 V RMS, 1 kHz 60 V RMS, 10 kHz	Generates flatness calibration data for the 70 V range

원문: Fluke Calibration 5790B 설명서 · 제조사 원문 자료입니다. 사양은 제조사 사정에 따라 변경될 수 있습니다.

Step Name	Voltage to Apply	Purpose of Calibration Step
70 V AC 20 kHz 70 V AC 50 kHz 70 V AC 100 kHz 70 V AC 300 kHz 70 V AC 500 kHz 70 V AC 1 MHz	60 V RMS, 20 kHz 60 V RMS, 50 kHz 60 V RMS, 100 kHz 60 V RMS, 300 kHz 20 V RMS, 500 kHz 20 V RMS, 1 MHz	
220 V AC 100 Hz 220 V AC 1 kHz 220 V AC 10 kHz 220 V AC 20 kHz 220 V AC 50 kHz 220 V AC 100 kHz 220 V AC 300 kHz	200 V RMS, 100 Hz 200 V RMS, 1 kHz 200 V RMS, 10 kHz 200 V RMS, 20 kHz 200 V RMS, 50 kHz 200 V RMS, 100 kHz 60 V RMS, 300 kHz	Generates flatness calibration data for the 220 V range
700 V AC 100 Hz 700 V AC 1 kHz 700 V AC 10 kHz 700 V AC 20 kHz 700 V AC 50 kHz 700 V AC 100 kHz	600 V RMS, 100 Hz 600 V RMS, 1 kHz 600 V RMS, 10 kHz 600 V RMS, 20 kHz 600 V RMS, 50 kHz 600 V RMS, 100 kHz	Generates flatness calibration data for the 700 V range
1000 V AC 100 Hz 1000 V AC 1 kHz 1000 V AC 10 kHz 1000 V AC 20 kHz 1000 V AC 50 kHz 1000 V AC 100 kHz	1000 V RMS, 100 Hz 1000 V RMS, 1 kHz 1000 V RMS, 10 kHz 1000 V RMS, 20 kHz 600 V RMS, 50 kHz 600 V RMS, 100 kHz	Generates flatness calibration data for the 1000 V range

AC Calibration Adjustment

Table 3-5 lists the equipment required to perform the ac calibration of the main input. Before you begin, make 12 copies of Figure 3-6 and 10 copies of Figure 3-7. Those are worksheets to help you calibrate the various ac points.

Table 3-5. Equipment Required for Main Input AC Calibration

Required Equipment	Manufacturer and Model	Minimum use Requirements
AC-DC Transfer Standard	Fluke Calibration 792A, with accessories	60 mV to 1000 Vrms, 10 Hz to 1 MHz
Multifunction Calibrator	Fluke Calibration 5730A	2 mV to 1000 Vrms, 10 Hz to 1 MHz
Amplifier for Above	Fluke Calibration 5725A (higher Volt-Hertz product)	600V to 1000 Vrms, 10 kHz to 100 kHz
8-1/2 Digit Precision DMM	Fluke 8508A	0-2 V dc, 10 nV resolution, 1 ppm linearity
50Ω Type “N” Tee, Male-Male-Male	Fluke P/N 912605 or equivalent	(Stainless Steel type recommended)
50Ω Type “N” Female to Double Banana Plug Adapter	Pomona Model 1740 or equivalent	1000 Vrms Breakdown Voltage, minimum
Frequency counter	Tektronix FCA3000	5 μHz/Hz Frequency Uncertainty or Better
Binding Posts to 50Ω Type “N” Male Adapter	Pomona Model 1796 or equivalent	1000 Vrms Breakdown Voltage, minimum

원문: Fluke Calibration 5790B 설명서 · 제조사 원문 자료입니다. 사양은 제조사 사정에 따라 변경될 수 있습니다.

VOLTAGE (NOMINAL) _____

FRE QUENC Y _____

792A CORRECTION (PPM) _____

	792A	5790B
+DC		
-DC		
DC AVER AGE	DC 792 =	DC 5790 =
AC_{792}		
AC_{MEAS}		

$$DC_{AVER\,AGE} = \left(\frac{|+DC| + |-DC|}{2}\right)$$

$$AC_{MEAS} = DC_{5790} \cdot \left(\frac{AC_{792}}{DC_{792}} + \frac{792\ CORR}{10^6}\right)$$

EXAMPLE:

VOLTAGE (NOMINAL) 2.0 V

FRE QUENC Y 10 Hz

792A CORRECTION (PPM) +14

	792A	5790B
+DC	1.713135	1.999799
-DC	1.713146	1.999801
DC AVER AGE	DC 792 = 1.713141	DC 5790 = 1.999800
AC_{792}	1.713188	
AC_{MEAS}	1.999858	

$$DC_{792} = \frac{1.713135 + 1.713146}{2} = 1.713141$$

$$DC_{5790} = \frac{1.999799 + 1.999801}{2} = 1.999800$$

$$AC_{MEAS} = 1.999800 \left(\frac{1.713188}{1.713141} + \frac{+14}{10^6}\right) = 1.999858$$

elu028.eps

Figure 3-6. Worksheet for 2 V to 1000 V AC Calibration Points

원문: Fluke Calibration 5790B 설명서 · 제조사 원문 자료입니다. 사양은 제조사 사정에 따라 변경될 수 있습니다.

VOLTAGE (NOMINAL) _____

FREQUENCY _____

5700A ERROR DISPLAY FROM TABLE 3-2, POSITIVE _____

5700A ERROR DISPLAY FROM TABLE 3-2, NEGATIVE _____

792A CORRECTION (PPM) _____

	792A DMM READING
+DC	
-DC	
DC_{792}	
AC_{792}	
AC_{MEAS} =	

$$DC_{792} = \left(\frac{I{+}DCI + I{-}DCI}{2} \right)$$

$$AC_{MEAS} = NOMINAL \cdot \left(\frac{AC_{792}}{DC_{792}} + \frac{792\ CORR}{10^6} \right)$$

elu029.eps

Figure 3-7. Worksheet for 60 mV to 600 mV AC Calibration Points

Proceed as follows to perform ac calibration of the main input, which must always be preceded by dc calibration:

1. Set up the equipment as shown in Figure 3-8. Connect the 792A without the 1000 V range resistor first.

원문: Fluke Calibration 5790B 설명서 · 제조사 원문 자료입니다. 사양은 제조사 사정에 따라 변경될 수 있습니다.

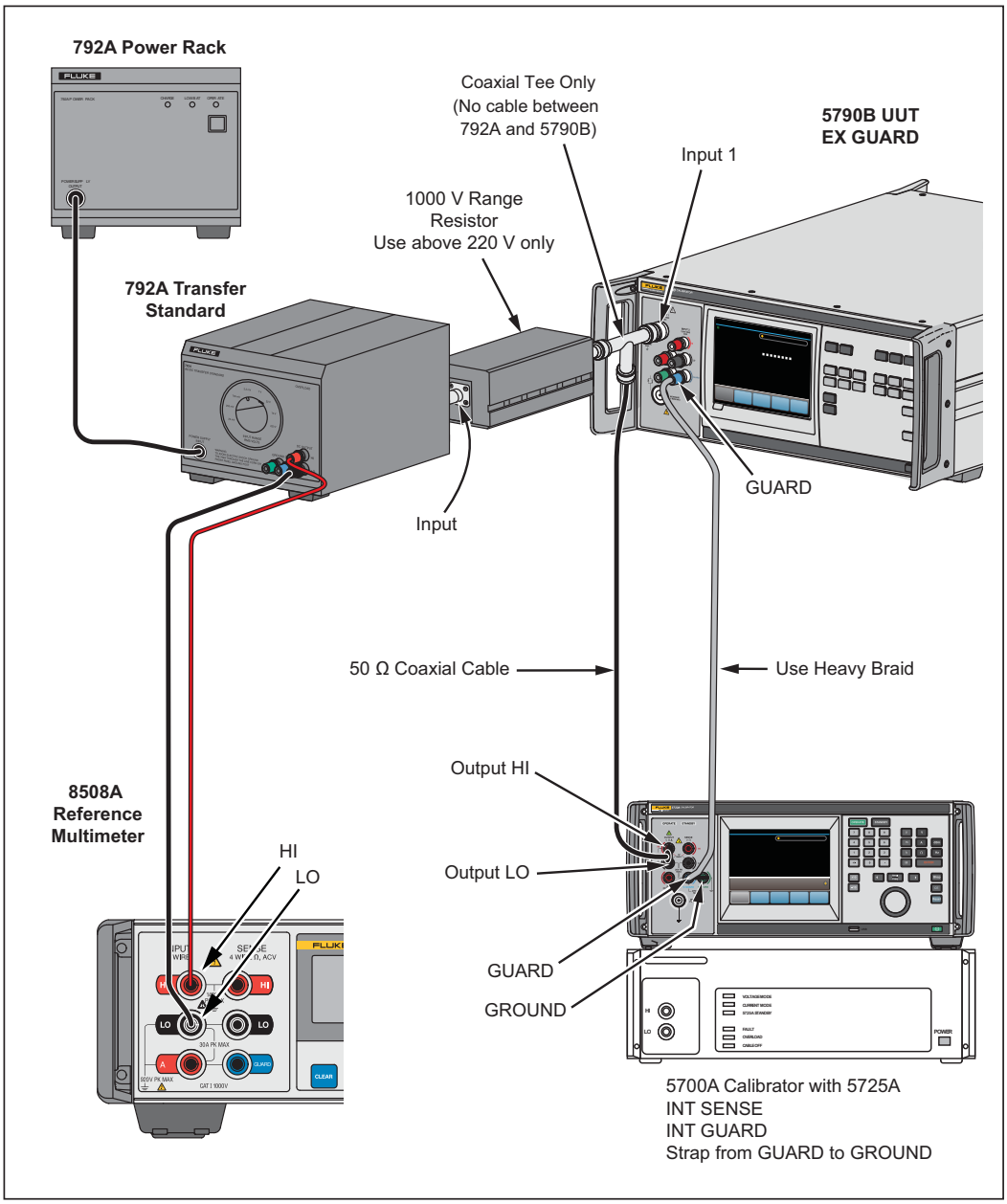

elu030.eps

Figure 3-8. AC Calibration Test Setup

원문: Fluke Calibration 5790B 설명서 · 제조사 원문 자료입니다. 사양은 제조사 사정에 따라 변경될 수 있습니다.

2. Set up the 5730A as follows so that its internal ac transfers are off:
   a. Push the “Setup Menus” softkey.
   b. Push the “Special Functns” softkey.
   c. Push the “ACXfer Choice” softkey so that ON appears.
   d. Push PREV MENU twice.
   e. Set the 5730A to 1 V, 1 kHz, operate. Push the “Intrnl Xfers” softkey so that OFF appears. (The “Intrnl Xfers” softkey appears only in the 5730A ranges below 220 V and at frequencies below 120 kHz.)
   f. Push 0,V, 0, Hz, ENTER, on the 5730A. Leave the 5730A in standby.
3. Select INPUT 1 so that its indicator ring is lit up, and then select **Setup Menu>Calibration>Adjust AC All Main**. The display changes to indicate the first AC Step: LF (10 Hz) Linearity.
4. For all the ac cal points down to the 70 mV range, use the Fluke Calibration 792A AC/DC Transfer Standard to adjust the ac voltage level being applied to the 5790B INPUT1 connector. There are three procedures for ac calibration points, depending on their amplitude. Go to the appropriate step as defined below:
   - Step 6: 2 V through 600 V
   - Step 7: 60 mV through 600 mV
   - Step 8: 2 mV through 20 mV
5. For an ac calibration point in the 2 V through 1000 V range, proceed as follows:
   a. Obtain a copy of Figure 3-6, the worksheet for this group. Fill in the test voltage and frequency and the associated 792A correction.
   b. If the test voltage is above 220 V, add the 792A 1000 V range resistor to the test setup as shown in Figure 3-8.
   c. Push the “Continue” softkey. This automatically selects the correct Product range.
   d. Set the 792A INPUT RANGE knob to the appropriate position. Always use the lowest range that will accept the input.

⚠ Caution

Always ensure that the proper range has been selected before applying the voltage to the 792A input. Inputs that exceed the protection level shown on its rear panel label disrupt the state of calibration and can cause instrument damage.

   e. Set the 5730A to the nominal test voltage, dc positive (Do not use a characterized setting as the Product is now used as the dc reference, thus allowing for any resistive drop caused by the 792A loading). Wait for the 5730A “U” annunciator to go out.
   f. Wait for 30 seconds for the DMM reading to stabilize. Record the DMM reading under the 792A column in the worksheet for +DC.

원문: Fluke Calibration 5790B 설명서 · 제조사 원문 자료입니다. 사양은 제조사 사정에 따라 변경될 수 있습니다.

TS-TL-FLK-051

we measure, we calibrate, we validate.
㈜테솔 · www.tessol.com TS-TL-FLK-051 60 / 172
KOLAS 국제공인교정기관 · ISO/IEC 17025

Record the reading on the Product Output Display under the 5790B column for +DC.

g. Push [±][ENTER] on the 5730A to toggle output polarity.

h. Again, allow the DMM reading to stabilize. Record the DMM reading under the 792A column in the worksheet for -DC. Record the reading on the Product Output Display under the 5790B column for -DC. Ignore polarity for the Product reading (record the absolute value).

i. Apply the frequency required for the calibration step. Wait for the "U" annunciator on the 5730A to go out.

j. Allow the DMM reading to stabilize. Record the DMM reading under the 792A column in the worksheet for ac. Do not record a reading for the Product.

k. Now do a computation to get the measured ac using the formulas shown in the worksheet:

   1) Compute the average of the dc readings for the Product and the 792A as shown.

   2) Compute "AC MEAS" using the formula shown. Be sure to include the 792A correction as indicated in the formula.

l. Observe the default "EXACT VALUE" on the display. It shows the allowed number of decimal places for you to enter. Enter your computation of "AC MEAS" in the Product using the keypad, and push the [ENTER] key. After you push [ENTER], the Control Display shows the progress of the internal process of the calibration step.

Note

While a calibration step is in progress, inaccurate values may appear on the Measurement Display. This is normal. When the Product is finished with the step, the display will read accurately.

m. When the step has completed, set the 5730A to standby.

6. For an ac calibration point in the 60 mV through 600 mV group, you will need to adjust the 5730A in accordance with the error displays that you recorded in Table 3-2. Proceed as follows:

   a. Obtain a copy of Figure 3-7, the worksheet for this group. Fill in the voltage, frequency, 5730A error displays (positive and negative) from Table 3-2, and the associated 792A correction.

   b. Push the "Continue" softkey. This automatically selects the appropriate 5790B range.

   c. Set the 792A INPUT RANGE knob to the appropriate position. Always use the lowest range that will accept the input.

⚠ Caution

Always ensure that the proper range has been selected before applying voltage to the 792A input. Inputs that exceed the protection level shown on its rear panel label disrupt the state of calibration and can cause instrument damage.

원문: Fluke Calibration 5790B 설명서 · 제조사 원문 자료입니다. 사양은 제조사 사정에 따라 변경될 수 있습니다.

d. Set the 5730A to nominal positive and then turn the knob to obtain the error display reading you recorded in Table 3-2. Wait for the 5730A “U” annunciator to go out.

e. Wait for 60 seconds for the DMM reading to stabilize. Record the DMM reading under the 792A column in the worksheet for +DC. Do not record a reading for the 5790B.

f. Set the 5730A to nominal negative, and then turn the knob to obtain the error display reading you recorded in Table 3-2. Wait for the 5730A “U” annunciator to go out.

g. Again, allow the DMM reading to stabilize. Record the DMM reading under the 792A column in the worksheet for -DC. Do not record a reading for the 5790B.

h. Apply the nominal voltage at the frequency required for the calibration step. Wait for the “U” annunciator on the 5730A to go out.

i. Allow the DMM reading to stabilize. Record the DMM reading under the 792A column in the worksheet for ac. Do not record a reading for the 5790B.

j. Now do a computation to get measured ac using the formulas shown in the worksheet:

   1) Compute the average of the 792A dc readings as shown.

   2) Compute “AC MEAS” using the formula shown. Be sure to include the 792A correction as indicated in the formula. Use nominal dc in the formula.

k. Observe the default “EXACT VALUE” on the display. It shows the allowed number of decimal places for you to enter. Enter your computation of “AC MEAS” in the Product using the keypad, and push the [ENTER] key. After you push [ENTER], the Control Display shows the progress of the internal process of the calibration step.

Note

While a calibration step is in progress, inaccurate values may appear on the Measurement Display. This is normal. When the Product is finished with the step, the display will read accurately.

l. When the step has completed, set the 5730A to standby.

7. For an ac calibration point in the 2 mV through 20 mV group, you use a bootstrapping technique. This procedure assumes the you have calibrated the 60 mV points. Each range is bootstrapped from the next higher range as shown in Figure 3-9. The bootstrap method relies on the linearity of the ranges starting from 70 mV and below. To minimize error due to DUT linearity, the linearity of each range used in this process has to be measured and corrected for. Build a 100:1 resistive divider with low power coefficient. This divider has to be linear - its ratio should not change with input voltage from 6 V to 0.2 V. It is not required to know the divider division ratio. Connect the Fluke 5730A, Fluke 792A, and the DUT as shown in Figure 3-10. Measure the linearity error of each range at 1 kHz only. The 1 kHz error is applicable to all frequencies within a range.

원문: Fluke Calibration 5790B 설명서 · 제조사 원문 자료입니다. 사양은 제조사 사정에 따라 변경될 수 있습니다.

TS-TL-FLK-051

we measure, we calibrate, we validate.
㈜테솔 · www.tessol.com TS-TL-FLK-051 62 / 172
KOLAS 국제공인교정기관 · ISO/IEC 17025

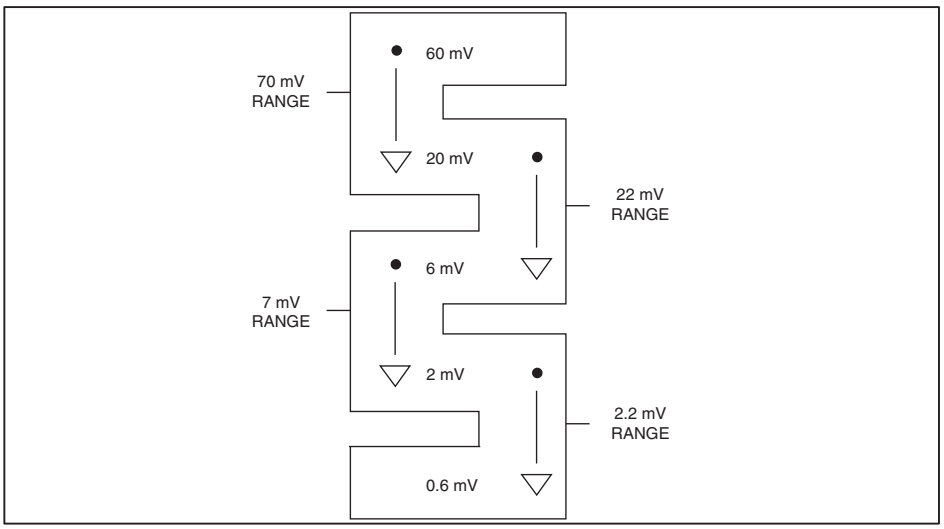

elu033.eps

Figure 3-9. Millivolt Range Bootstrapping Technique

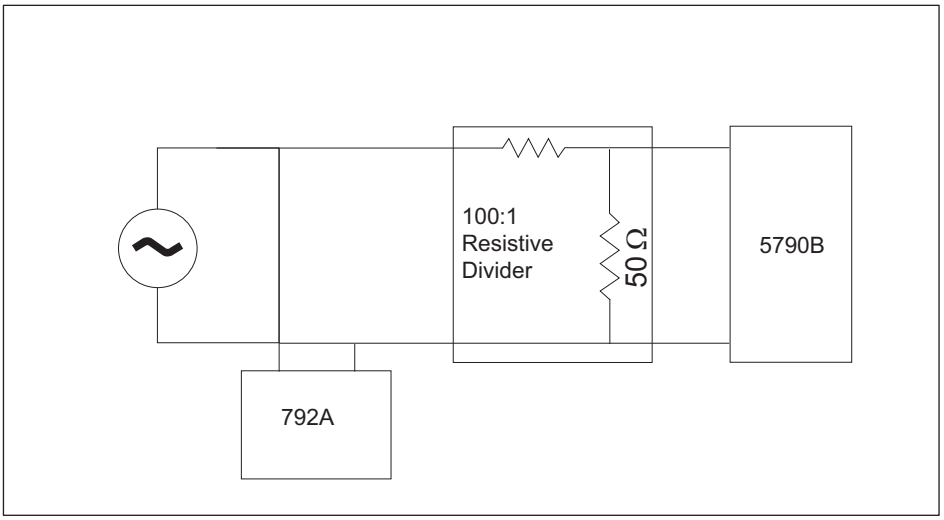

elu072.eps

Figure 3-10. mV Range Linearity Setup for Bootstrap Ranges

a. Calibrate the 22 mV range as follows:

1) Lock the Product in the 70 mV range. The 792A may be left attached, although it is not used.
2) Apply the requested voltage and frequency. When the reading on the Product Measurement Display settles, record the reading. Correct the measurement for linearity error as measured using the 100:1 divider.
3) Push the Continue softkey. This automatically selects the 22 mV range.
4) Enter the value you recorded in step 2 and push the ENTER softkey.

원문: Fluke Calibration 5790B 설명서 · 제조사 원문 자료입니다. 사양은 제조사 사정에 따라 변경될 수 있습니다.

5) When the step is completed, set the 5730A to standby.
6) Repeat the previous steps 1 through 5 for the other 22 mV range point(s).

b. Calibrate the 7 mV range as follows:
1) Lock the Product in the 22 mV range. The 792A may be left attached, although it is not used.
2) Apply the requested voltage and frequency. When the reading on the Product Measurement Display settles, record the reading.
3) Push the “Continue” softkey. This automatically selects the 7 mV range.
4) Enter the value you recorded in step 2 and push the ENTER softkey.
5) When the step is completed, set the 5730A to standby.
6) Repeat the previous steps 1 through 5 for the other 7 mV range point(s).

c. Calibrate the 2.2 mV range as follows:
1) Lock the Product in the 7 mV range. The 792A may be left attached, although it is not used.
2) Apply the requested voltage and frequency. When the reading on the Product Measurement Display settles, record the reading.
3) Push the “Continue” softkey. This automatically selects the 2.2 mV range.
4) Enter the value you recorded in step 2 and push the ENTER softkey.
5) When the step is completed, set the 5730A to standby.
6) Repeat the previous steps 1 through 5 for the other 2.2 mV range point(s).

8. When you finish the calibration, the display returns to the calibration screen. The “Save Cal Constants” field indicates Needed.
9. Nothing has been saved in nonvolatile memory yet. To make calibration valid, you need to store the constants. Select “Cal Store” then enter the passcode. The “Cal Store” field changes from Secured to Open.
10. Select “Save Cal constants”, the message indicates “Save Operation Complete”.
11. Push OK and the “Save Cal Constant” field changes to “Not Needed”.
12. Push “Cal Store” to change “Cal Store” to “Secured”. The Main Adjustment Date also changes to the current date. Adjustment date can be seen by selecting **Setup Menu>Calibration>View/Update Cal Dates**.

원문: Fluke Calibration 5790B 설명서 · 제조사 원문 자료입니다. 사양은 제조사 사정에 따라 변경될 수 있습니다.

TS-TL-FLK-051

we measure, we calibrate, we validate.
㈜테솔 · www.tessol.com TS-TL-FLK-051 64 / 172
KOLAS 국제공인교정기관 · ISO/IEC 17025

Calibrate the Wideband AC Option

The following procedure is a part of calibration only if the Wideband Option is installed in your Product. You calibrate the WIDEBAND input in four major steps:

1. Perform the main input calibration first.
2. Characterize the ac source (a 5730A with Wideband option and associated attenuators, cable, and connectors).
3. Calibrate the WIDEBAND input gain.
4. Calibrate the WIDEBAND input flatness.

Table 3-6 lists the equipment required to calibrate the WIDEBAND input. Before you proceed, make a copy of Table 3-8 which is the worksheet for WIDEBAND input calibration.

Table 3-6. Equipment Required for Wideband Calibration

Required Equipment	Manufacturer and Model	Minimum use Requirements
Multifunction Calibrator	Fluke Calibration 5730A with Wideband (/5) Option (incl. Cable and 50Ω term.)	3.2 Vrms, 10 Hz - 50 MHz 32 mV - 3.2 Vrms, 1 kHz
Thermal Voltage Converter	Precision Measurement EL1100	≈3 Vrms, 10 Hz - 50 MHz Calibrated for voltage flatness by Fluke Calibration.
Precision resistive 50 Ohm load Type N (M/F).	N/A. User made.	50 Ω ±0.01 Ω dc resistance.
AC Voltmeter	Fluke 5790B	Published specifications.
Nanovoltmeter	Keithley 2182A or equivalent	20 nV short-term stability
20 dB type “N” RF Attenuator (3 each)	JFW Industries 50HFI-020N [1]	0.0001dB/dB/°C Temperature Coefficient[2] 50Ω ± 0.5Ω dc Resistance
10 dB type “N” RF Attenuator (1 each)	JFW Industries 50HFI-010N [1]	0.0001dB/dB/°C Temperature Coefficient, [2] 50Ω ± 0.5Ω dc Resistance
Cable Assy., 18” Type “N” (M) to Type “N” (F)	Pomona 4496-T-18 or equivalent	Facilitate connection to DMM for 1 kHz Wideband Gain verification
Adapter, Type “N” (F) to Double Banana Plug	Pomona 1740 or equivalent	Facilitate connection to DMM for 1 kHz Wideband Gain verification
Frequency counter	Tektronix FCA3000	5ppm Frequency Uncertainty or Better
[1] The JFW attenuators must be calibrated by Fluke Calibration (see text).		

원문: Fluke Calibration 5790B 설명서 · 제조사 원문 자료입니다. 사양은 제조사 사정에 따라 변경될 수 있습니다.

we measure, we calibrate, we validate.
KOLAS 국제공인교정기관 · ISO/IEC 17025

Table 3-7. Wideband Calibration Worksheet

				_____Range					
Frequency	**EL1100 Corr. (PPM)**	**5790B Error (PPM)**	**5730A Error (PPM)**	**10 dB Error (PPM)**	**20 dB Error (PPM)**	**20 dB Error (PPM)**	**20 dB Error (PPM)**	**Total Error (PPM)**	**1 kHz Ref Error (Enter Once)**
10 Hz									
20 Hz									x
50 Hz									x
100 Hz									x
200 Hz									x
2 kHz									x
10 kHz									x
20 kHz									x
50 kHz									x
100 kHz									x
200 kHz									x
500 kHz									x
700 kHz									x
1 MHz									x
1.2 MHz									x
2 MHz									x
3 MHz									x
4 MHz									x
6 MHz									x
8 MHz									x
9 MHz									x
10 MHz									x
12 MHz									x
15 MHz									x
17 MHz									x
20 MHz									x
23 MHz									x
26 MHz									x
28 MHz									x
30 MHz									x
35 MHz									x
40 MHz									x
45 MHz									x
50 MHz									x

원문: Fluke Calibration 5790B 설명서 · 제조사 원문 자료입니다. 사양은 제조사 사정에 따라 변경될 수 있습니다.

Characterizing the AC Source

To meet the test uncertainty requirements for WIDEBAND input calibration, you must first characterize the ac source and its dedicated Wideband cable to be used in the procedure. You must characterize the source and calibrate the WIDEBAND input in a temperature-controlled room. The EL1100 Thermal Converter will not stabilize in a drafty or unstable environment. In this procedure, you will fill in the 5730A ERROR column of Table 3-8 for later use during the WIDEBAND flatness calibration.

Note

Fluke Calibration offers a calibration service for Precision Measurement EL1100 and JFW attenuators at the Fluke Primary Laboratory. For price and delivery of this calibration service, please see How to Contact Fluke Calibration.

1. Connect the equipment as shown in Figure 3-10.

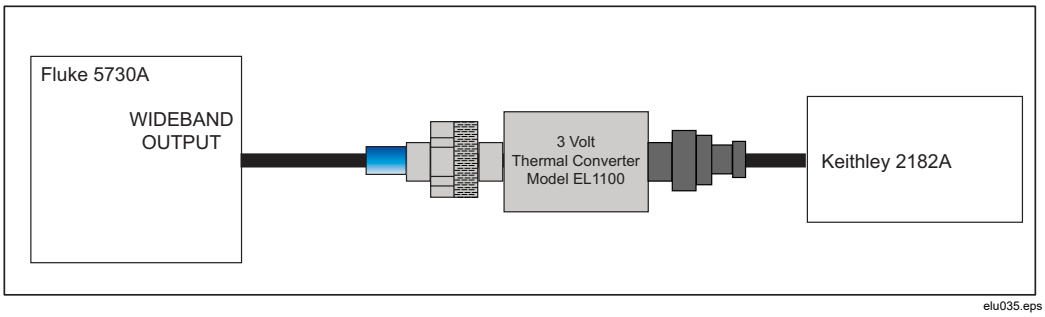

Figure 3-11. Wideband Calibration Source Characterization, Part 1

2. Make sure equipment warmup requirements are met.
3. Set the 5730A to output 3.2 V at 1 kHz. The TVC output will be about 7 mV.
4. Allow the TVC to stabilize (warm up for at least 10 minutes), then push the STORE and ENTER keys on the DMM to average 20 readings for statistics. Push REL on the DMM to zero the display. This measurement will be used as a baseline for drift detection as well as signal leveling at each test frequency.
5. For each frequency in Table 3-8, set the 5730A frequency and perform steps 6 and 7.
6. Apply any corrections for the response of the TVC by first adjusting the 5730A output to bring the DMM offset reading to 0 ±1 µV, and then pushing the NEW REF key on the 5730A, and then further adjusting the 5730A to give the same error and sign as recorded on the EL1100 calibration sheet when it was calibrated. Also record the TVC correction in Table 3-8.
7. Return to 3.2 V at 1 kHz after each frequency calibrated to verify that the meter is still reading 0. Rezero the DMM if necessary by pushing the REL key again.
8. Set the 5730A to STANDBY.
9. The characterization of the source for absolute measurements establishes the actual output of the calibrator at 1 kHz when the calibrator

원문: Fluke Calibration 5790B 설명서 · 제조사 원문 자료입니다. 사양은 제조사 사정에 따라 변경될 수 있습니다.
TS-TL-FLK-051
we measure, we calibrate, we validate.
㈜테솔 · www.tessol.com TS-TL-FLK-051 67 / 172
KOLAS 국제공인교정기관 · ISO/IEC 17025

Wideband output and cable is terminated with a good 50 Ω load. Remove the DMM and TVC. Connect the 5730A wideband cable to the the 50 Ω input impedance ac voltmeter in Figure 3-2. In this setup, the 50 Ω input impedance consists of calibrated Fluke 5790B with a precision 50 Ω resistive load , where the load is made of carbon film resistors and trimmed to within 50 Ω ±200 μΩ/Ω . The 50 Ω load should be able to handle as much as 3.5 V without change in resistance.

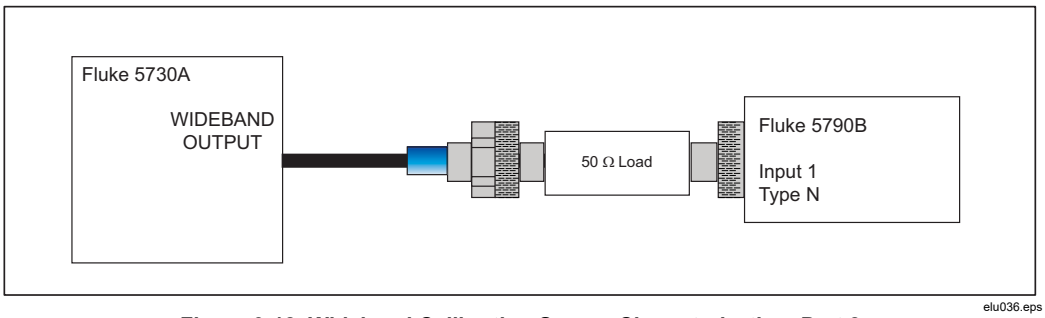

Figure 3-12. Wideband Calibration Source Characterization, Part 2

The Product must be used in External Guard with Guard connection between the Product and the 5730A.

10. Measure the source output for each step in Table 3-8 and record the measurement of the AC Voltmeter. For step in the table marked with an *, a 500 μV/V correction must be added to correct for the loading of the 50 Ω load by the AC Voltmeter input impedance.

원문: Fluke Calibration 5790B 설명서 · 제조사 원문 자료입니다. 사양은 제조사 사정에 따라 변경될 수 있습니다.

we measure, we calibrate, we validate.
㈜테솔 · www.tessol.com TS-TL-FLK-051 68 / 172
KOLAS 국제공인교정기관 · ISO/IEC 17025

TS-TL-FLK-051

Table 3-8. Wideband Calibration Source Characterization

Amplutude	Frequency	Fluke 5790B Measured
3.5 V	1 kHz	*
3.2 V	1 kHz	*
2 V	1 kHz	
1 V	1 kHz	
0.64 V	1 kHz	
0.6 V	1 kHz	
0.32 V	1 kHz	
0.2 V	1 kHz	
0.1 V	1 kHz	
60 mV	1 kHz	
32 mV	1 kHz	
20 mV	1 kHz	
10 mV	1 kHz	
6 mV	1 kHz	
3.2 mV	1 kHz	
2 mV	1 kHz	
1 mV	1 kHz	

원문: Fluke Calibration 5790B 설명서 · 제조사 원문 자료입니다. 사양은 제조사 사정에 따라 변경될 수 있습니다.

Calibration Adjustment of Wideband Input Gain at 1 kHz

Proceed as follows to perform gain (absolute) calibration adjustment at 1 kHz for each range.

1. Connect the 5730A Wideband output to the 5790B Wideband input with the same cable used during characterization.
2. Select Wide Band Input.
3. Select **Setup Menu>Calibration> Adjust DC: All Wideband**.
4. The Product will step to the first calibration point on the 7 V range.
5. Use the number keys to enter the requested value recorded in Table 3-8, then push [CONTINUE].
6. The Product will calibrate the 7 V range and proceed to the 2.2 V range.
7. Enter the value from Table 3-8 into the Product as before and push [CONTINUE]. Continue with the rest of the steps until Absolute Calibration Adjust is completed.
8. The absolute calibration on all ranges is now complete and the Product is ready for flatness calibration.

원문: Fluke Calibration 5790B 설명서 · 제조사 원문 자료입니다. 사양은 제조사 사정에 따라 변경될 수 있습니다.

Calibration Adjustment of Wideband Input Flatness

The wideband source characterization must be done within 30 minutes of beginning flatness calibration. Before you start, make 8 copies of Table 3-7 with the 5730A error column filled in (Recorded entries into the 5730A error column during in the first part of WIDEBAND calibration.)

1. Connect the equipment as shown in Figure 3-13.

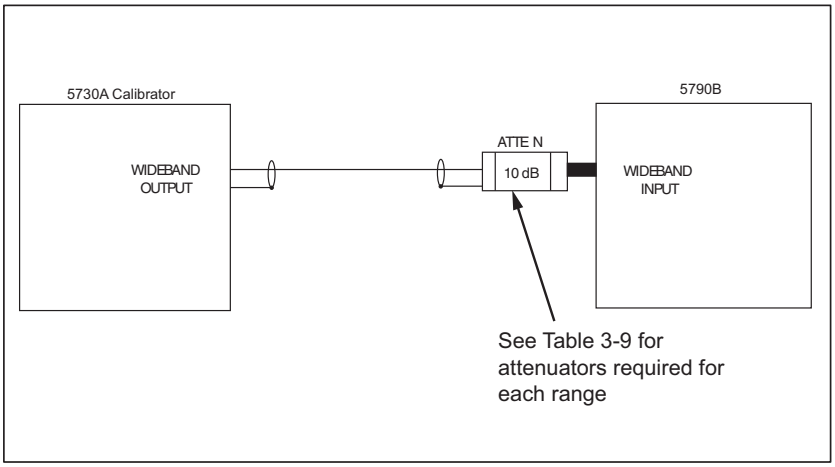

elu039.eps

Figure 3-13. WIDEBAND Input Flatness Calibration Test Setup

2. The 5730A will be set to a nominal 3.2 V for all flatness calibration. The only deviation from the nominal value will be for calibration corrections for the 5730A and the attenuators.
3. Enter a range voltage at the top of each copy you made of Table 3-8 (7 V, 2.2 V, 700 mV, 220 mV, 70 mV, 22 mV, 7 mV, and 2.2 mV). Also enter the attenuator corrections as required for each range. Add the total error for each frequency and enter the result in the TOTAL ERROR column in each copy. The total error equals the sum of errors of the 5730A and all attenuators used for that frequency.

원문: Fluke Calibration 5790B 설명서 · 제조사 원문 자료입니다. 사양은 제조사 사정에 따라 변경될 수 있습니다.

Table 3-9 shows the combination of the attenuators required to scale the input signal properly for each range.

Table 3-9. Attenuators Required for Each Range

Range	Attenuators	5790B Input
7 V	None	3.2 V
2.2 V	(1) 10 dB	1 V
700 mV	(1) 20 dB	320 mV
220 mV	(1) 20 dB + (1) 10 dB	100 mV
70 mV	(2) 20 dB	32 mV
22 mV	(2) 20 dB + (1) 10 dB	10 mV
7 mV	(3) 20 dB	3.2 mV
2.2 mV	(3) 20 dB + (1) 10 dB	1 mV

4. All ranges are calibrated in the similar manner. The calibration program will prompt you at each step as to what frequency to apply.
5. From the **Setup Menu>Calibration** screen, push the “Adjust AC All Wideband” softkey. The flatness calibration program starts with the 7 V range.
6. To establish a 1 kHz reference at the beginning of each range, set the 5730A to 3.2 V and 1 kHz apply the appropriate attenuation as indicated in Table 3-9 to obtain the correct input magnitude for the current range.
7. Push the “Continue” softkey. The 7 V 1 kHz reference will be measured and the calibration program will continue the 7 V 10 Hz step.
8. Set the 5730A to 3.2 V at 10 Hz and adjust the 5730A to the total error value at 10 Hz that was recorded in Table 3-8 during source characterization.
9. Push the [Continue] key and the system will calibrate the range at 10 Hz and step to the 50 Hz calibration point.
10. Set the 5730A to 50 Hz and adjust the 5730A to the total error value at 50 Hz that was recorded in Table 3-8 during source characterization.
11. Push the [Continue] key and the system will calibrate the range at 50 Hz and step to the 400 Hz calibration point.
12. Proceed through the range at each calibration point frequency in the same manner as steps 10, 11, and 12 by applying the proper frequency and total error values (Note that the total error value is the sum of the errors of the 5730A and all attenuators used for that range and frequency).
13. When the calibration program has completed all the steps in the 7 V range, it will step to the beginning of the 2.2 V range at the 1 kHz reference.
14. Install the 10 dB attenuator as required by Table 3-9 for the 2.2 V range.
15. Establish the 1 kHz reference for this range by again setting the 5730A to 3.2 V at 1 kHz and apply the appropriate attenuation as indicated in Table

원문: Fluke Calibration 5790B 설명서 · 제조사 원문 자료입니다. 사양은 제조사 사정에 따라 변경될 수 있습니다.

TS-TL-FLK-051

we measure, we calibrate, we validate.
㈜테솔 · www.tessol.com TS-TL-FLK-051 72 / 172
KOLAS 국제공인교정기관 · ISO/IEC 17025

3-9 to obtain the correct input magnitude for the current range. The Product will measure the magnitude. Record this value in Table 3-8.

16. Push the “Continue” softkey and enter the 1 kHz reference value just measured for the “APPLIED VALUE”. The 2.2 V 1 kHz reference will be measured and the calibration program will continue the 2.2 V 10 Hz step.
17. Set the 5730A to 3.2 V at 10 Hz and adjust the 5730A to the total error value at 10 Hz for the 2.2 V range as recorded in Table 3-8.
18. Push the [Continue] key and the system will calibrate the range at 10 Hz and step to the 50 Hz calibration point as before.
19. Set the 5730A to 50 Hz and adjust for errors. Push “Continue”.
20. The system will calibrate the 50 Hz point and step to the 400 Hz point.
21. Proceed through the range at each calibration point as before by applying the proper frequency and error values.
22. All remaining ranges are done in a similar manner by installing the proper attenuators establishing the 1 kHz reference and adjusting for errors at each frequency. The calibration program returns to the calibration screen. Nothing has been saved in nonvolatile memory yet. To make calibration valid, the constants must be stored. Select “Cal Store” then enter the passcode. The Cal Store field changes from “Secured” to “Open”.
23. Select “Save Cal” constants. The display indicates “Save Operation Complete”.
24. Push OK. The “Save Cal Constant” field changes to “Not Needed”.
25. Push “Cal Store” to change Cal Store to “Secured”. The Wideband Adjustment Date also changes to the current date. Adjustment date can be viewed by selecting **Setup Menu>Calibration>View/Update Cal Dates**.

Calibration Adjustment of AF Option

The following procedure is a part of calibration adjustment only if the 5790B/AF Option is installed in your Product. 5790B with an AF Option are supplied with a dedicated cable for this option. The calibration of the Product is only valid when the provided cable is used. The AF option calibration is affected by calibration adjustment of the Product Wideband Flatness. Always perform AF Option calibration adjustment after Flatness Adjustment. This procedure is initiated through remote commands only. Refer to the *5790B Operators Manual* for information on establishing remote communication. Proceed as follows to perform AF calibration adjustment. Calibration adjustment is performed with a characterized 1 mW @ 50 MHz source. Characterize the source prior to use with the reference power measurement system.

Table 3-10 lists the equipment required to do the calibration adjustment of the AF option of the Product.

원문: Fluke Calibration 5790B 설명서 · 제조사 원문 자료입니다. 사양은 제조사 사정에 따라 변경될 수 있습니다.

Table 3-10. Required Equipment for Calibration Adjustment of the AF Option.

Required Equipment	Manufacture and Model	Minimum use Requirements
Power meter with REF OUT	N/A	0.1 % short term stability. SWR better than 1.05
Power Meter	Tegam 1830A	Published specifications
Coaxial RF Power Standard	Tegam M1130A or Keysight 478A (Option H76)	Calibration uncertainty of 0.3 % or better.
PC with USB or serial port running Microsoft hyperterminal program (hyperterm.exe) or similar		RS-232 serial communication

1. Connect the Power Reference System (Power Meter with Coaxial RF Power Standard) to the 1 mW @ MHz source. Make a measurement to establish the output of the source. This value shall be used in consecutive measurement with the product.
2. Connect the matching N-type cable supplied as part of the AF option to the Wideband input.
3. Connect to the source used in step 1.
4. Execute the remote command string: INPUT WBND; DFILT FAST, MEDIUM;
5. Execute the remote command string: *CLS; CAL_WBCABLE zzzzzz V; *OPC
6. Where zzzzzz represents the voltage equivalent of the characterized source. A characterized value in mW the conversion to voltage is as follows:

$$\sqrt{mW_value * 50 * 10^{-3}}$$

7. This completes the Product AF Option calibration. When finished the calibration screen is shown. The correction is automatically stored.
8. The date of the AF 50 MHz cable calibration can be obtained by executing the remote query: CAL_DATE? STORED,WBCABLE

원문: Fluke Calibration 5790B 설명서 · 제조사 원문 자료입니다. 사양은 제조사 사정에 따라 변경될 수 있습니다.

Calibration Verification

Main input verification is presented first, followed by WIDEBAND input verification.

Note

All performance limits specified in the test records apply to 90-day specifications for the Product. For Wideband verification, the 2 year or 1 year specifications are used where there are no 90 day specifications. If limits to other specifications are desired, the test records must be modified.

Note

Equivalent equipment and methods, either manual or automated, may be substituted for the following verification tests as long as the same points are tested, and equipment and standards used are at least as accurate as those specified. If standards are less accurate than specified, appropriate tolerance limit and/or accuracy reductions must be made to achieve equivalent results.

Verifying the DC Voltage Performance of the Main Input

The calibration verification of the main input dc voltage is done on Input 2. Although equivalent for transfer function to Input 1, Input 2 is recommended for the dc voltage function as it offers low thermal connection via the binding posts, thus minimizing thermals errors. The equipment listed in Table 3-11 is required for the calibration of the dc voltage function. The Fluke 5730A provides for reasonable test uncertainty ratio, especially if it is calibrated to its 90 day specification limits and within the 90 day calibration interval.

Table 3-11. Required Equipment for Calibration of DC Voltage

Required Equipment	Manufacture and Model
Multifunction Calibrator	Fluke 5730A*
Low-Thermal Test Leads	Fluke 5440B-7002 or equivalent
*The 5730A may be used with its characterized values to improve the TUR.	

The 90 day specifications are used in the product dc voltage performance verification (Table 3-12). To evaluate against the 1 year specifications, create a custom table of the same format where the limits are calculated using the product 1 year specifications.

원문: Fluke Calibration 5790B 설명서 · 제조사 원문 자료입니다. 사양은 제조사 사정에 따라 변경될 수 있습니다.

Table 3-12. DC Voltage Performance Verification Table

Step No.	Range	Nominal	5790B Positive Measurement	5790B Negative Measurement	5790B Average*	Lower Limit	Upper Limit
1	200 mV	60 mV				59.99628 mV	60.00372 mV
2	200 mV	200 mV				199.99110 mV	200.00890 mV
3	700 mV	200 mV				199.99230 mV	200.00770 mV
4	700 mV	600 mV				599.97990 mV	600.02010 mV
5	2.2 V	0.6 V				0.59998680 V	0.60001320 V
6	2.2 V	1.0 V				0.99997800 V	1.00002200 V
7	2.2 V	2.0 V				1.99995600 V	2.00004400 V
8	7 V	2 V				1.999956 V	2.000044 V
9	7 V	6 V				5.999868 V	6.000132 V
10	22 V	6 V				5.999850 V	6.000150 V
11	22 V	20 V				19.999500 V	20.000500 V
12	70 V	20 V				19.99940 V	20.00060 V
13	70 V	60 V				59.99820 V	60.00180 V
14	220 V	60 V				59.99826 V	60.00174 V
15	220 V	200 V				199.99420 V	200.00580 V
16	700 V	200 V				199.9922 V	200.0078 V
17	700 V	600 V				599.9766 V	600.0234 V
18	1100 V	600 V				599.9778 V	600.0222 V
19	1100 V	1049 V				1048.9612 V	1049.0388 V
*The average of the absolute measurement of the Product with normal and reversed polarity stimulus applied. 5790B Average = (Meas1 + |Meas2|)/2							

1. Connect the 5730A Output HI/LO to the Product Input 2 HI/LO using the low thermal leads. Connect the 5790B Guard to the 5730A Guard. Ensure the Guard to Ground strap on the 5730A is installed. Set the Product for Input 2, External Guard and auto range. Allow three minutes for thermal dissipation after leads are connected.

원문: Fluke Calibration 5790B 설명서 · 제조사 원문 자료입니다. 사양은 제조사 사정에 따라 변경될 수 있습니다.

2. For each line of Table 3-12, apply the input specified in column “Nominal” stimulus from the 5730A.
3. Some tests require range locking of the Product to ensure that the appropriate range is calibrated. Select the appropriate range lock key on the front panel of the Product.
4. Wait for measurement to stabilize.
5. Record in the “5790B Positive Measurement” column of Table 3-12.
6. Set the 5730A to output negative nominal stimulus.
7. Wait for measurement to stabilize.
8. Record in the “5790B Negative Measurement” column of Table 3-12.
9. Calculate the average of the absolute values and record in column “5790B Average” of Table 3-12.
10. Evaluate the result relative to the Lower and Upper limit columns.
11. Repeat steps 2 to 10 for each line of the verification table.

Verifying the Main Input (INPUT 1 or 2)

Verifying the Main Input requires measurements and calculations that result in over 400 entries in a test record. At Fluke Calibration, an automated procedure is used as described in the introduction to this section. Test voltages and frequencies are divided into five regions as defined in Table 3-13. The procedures you use for each region are described next.

Note

Refer to Figures 3-5 and 3-8 for test setups.

Table 3-13. Main Input Verification Regions

Ranges	AC-DC Difference Error	Absolute AC Error
2.2 V through 1000 V	Region I	Region II
70 mV through 700 mV	Region III	Region IV
7 mV through 22 mV	No spec	Region V

To do the procedure manually, make copies of the rest of the worksheets in this section before you proceed. Table 3-14 is the overall test record for main input verification.

원문: Fluke Calibration 5790B 설명서 · 제조사 원문 자료입니다. 사양은 제조사 사정에 따라 변경될 수 있습니다.

TS-TL-FLK-051

we measure, we calibrate, we validate.
㈜테솔 · www.tessol.com TS-TL-FLK-051 77 / 172
KOLAS 국제공인교정기관 · ISO/IEC 17025

Table 3-14. Test Record for Main Input Verification

Step No.	5790B Range	Test Voltage (V)	Frequency	90 Day Absolute AC Error Spec. (±ppm)	1 Yr. Absolute AC Error Spec. (±ppm)	Measured Absolute AC Error (PPM)	2 Yr AC-DC Error Spec. (±ppm)	Measured AC-DC Error (PPM)
1	0.0022	0.002	10 Hz	2350	2350		No spec	
2	0.0022	0.002	20 Hz	1390	1390		No spec	
3	0.0022	0.002	40 Hz	1070	1070		No spec	
4	0.0022	0.002	1 kHz	1070	1070		No spec	
5	0.0022	0.002	20 kHz	1070	1070		No spec	
6	0.0022	0.002	50 kHz	1810	1810		No spec	
7	0.0022	0.002	100 kHz	2450	2450		No spec	
8	0.0022	0.002	300 kHz	4300	4300		No spec	
9	0.0022	0.002	500 kHz	5400	6400		No spec	
10	0.0022	0.002	1 MHz	6200	7500		No spec	
11	0.0022	0.0006	1 kHz	2587	2587		No spec	
12	0.007	0.006	10 Hz	1070	1070		No spec	
13	0.007	0.006	20 Hz	587	587		No spec	
14	0.007	0.006	40 Hz	427	427		No spec	
15	0.007	0.006	1 kHz	427	427		No spec	
16	0.007	0.006	20 kHz	427	427		No spec	
17	0.007	0.006	50 kHz	733	733		No spec	
18	0.007	0.006	100 kHz	1020	1020		No spec	
19	0.007	0.006	300 kHz	1870	1870		No spec	
20	0.007	0.006	500 kHz	2300	2600		No spec	
21	0.007	0.006	1 MHz	3000	3600		No spec	
22	0.022	0.02	10 Hz	355	355		No spec	
23	0.022	0.02	20 Hz	245	245		No spec	
24	0.022	0.02	40 Hz	175	175		No spec	
25	0.022	0.02	1 kHz	175	175		No spec	
26	0.022	0.02	20 kHz	175	175		No spec	
28	0.022	0.02	50 kHz	310	310		No spec	
29	0.022	0.02	100 kHz	435	435		No spec	
30	0.022	0.02	300 kHz	1010	1010		No spec	
31	0.022	0.02	500 kHz	1160	1290		No spec	
32	0.022	0.02	1 MHz	1700	2100		No spec	

원문: Fluke Calibration 5790B 설명서 · 제조사 원문 자료입니다. 사양은 제조사 사정에 따라 변경될 수 있습니다.

Step No.	5790B Range	Test Voltage (V)	Frequency	90 Day Absolute AC Error Spec. (±ppm)	1 Yr. Absolute AC Error Spec. (±ppm)	Measured Absolute AC Error (PPM)	2 Yr AC-DC Error Spec. (±ppm)	Measured AC-DC Error (PPM)
33	0.07	0.06	10 Hz	265	265		No spec	
34	0.07	0.06	20 Hz	145	145		No spec	
35	0.07	0.06	40 Hz	89	90		No spec	
36	0.07	0.06	1 kHz	89	90		No spec	
37	0.07	0.06	20 kHz	89	90		No spec	
39	0.07	0.06	50 kHz	153	163		No spec	
40	0.07	0.06	100 kHz	302	302		No spec	
41	0.07	0.06	300 kHz	577	577		No spec	
42	0.07	0.06	500 kHz	760	803		No spec	
43	0.07	0.06	1 MHz	1200	1230		No spec	
44	0.22	0.06	1 kHz	62	63		34	
45	0.22	0.06	1 MHz	1040	1100		No spec	
46	0.22	0.2	10 Hz	218	218		210	
47	0.22	0.2	20 Hz	92	93		82	
48	0.22	0.2	40 Hz	45	46		34	
50	0.22	0.2	1 kHz	45	46		34	
51	0.22	0.2	20 kHz	45	46		34	
52	0.22	0.2	50 kHz	79	79		67	
53	0.22	0.2	100 kHz	173	173		No spec	
54	0.22	0.2	300 kHz	260	270		No spec	
55	0.22	0.2	500 kHz	390	420		No spec	
56	0.22	0.2	1 MHz	970	1040		No spec	
57	0.7	0.6	10 Hz	213	213		210	
58	0.7	0.6	20 Hz	78	79		73	
60	0.7	0.6	40 Hz	34	36		27	
61	0.7	0.6	1 kHz	34	36		27	
62	0.7	0.6	20 kHz	34	36		27	
63	0.7	0.6	50 kHz	53	54		47	
64	0.7	0.6	100 kHz	83	83		No spec	
65	0.7	0.6	300 kHz	167	187		No spec	
66	0.7	0.6	500 kHz	310	313		No spec	
67	0.7	0.6	1 MHz	910	973		No spec	

원문: Fluke Calibration 5790B 설명서 · 제조사 원문 자료입니다. 사양은 제조사 사정에 따라 변경될 수 있습니다.

5790B
Service Manual

Step No.	5790B Range	Test Voltage (V)	Frequency	90 Day Absolute AC Error Spec. (±ppm)	1 Yr. Absolute AC Error Spec. (±ppm)	Measured Absolute AC Error (PPM)	2 Yr AC-DC Error Spec. (±ppm)	Measured AC-DC Error (PPM)
68	2.2	0.6	10 Hz	200	200		200	
69	2.2	0.6	20 Hz	65	66		63	
71	2.2	0.6	40 Hz	22	24		18	
72	2.2	0.6	1 kHz	22	24		18	
73	2.2	0.6	20 kHz	22	24		18	
74	2.2	0.6	50 kHz	45	46		43	
75	2.2	0.6	100 kHz	70	71		No spec	
76	2.2	0.6	300 kHz	150	160		No spec	
77	2.2	0.6	500 kHz	250	260		No spec	
78	2.2	0.6	1 MHz	840	900		No spec	
79	2.2	1.0	10 Hz	200	200		200	
80	2.2	1.0	20 Hz	65	66		63	
82	2.2	1.0	40 Hz	22	24		18	
83	2.2	1.0	1 kHz	22	24		18	
84	2.2	1.0	20 kHz	22	24		18	
85	2.2	1.0	50 kHz	45	46		43	
86	2.2	1.0	100 kHz	70	71		No spec	
87	2.2	1.0	300 kHz	150	160		No spec	
88	2.2	1.0	500 kHz	250	260		No spec	
89	2.2	1.0	1 MHz	840	900		No spec	
90	2.2	2.0	10 Hz	200	200		200	
91	2.2	2.0	20 Hz	65	66		63	
93	2.2	2.0	40 Hz	22	24		18	
94	2.2	2.0	1 kHz	22	24		18	
95	2.2	2.0	20 kHz	22	24		18	
96	2.2	2.0	50 kHz	45	46		43	
97	2.2	2.0	100 kHz	70	71		No spec	
98	2.2	2.0	300 kHz	150	160		No spec	
99	2.2	2.0	500 kHz	250	260		No spec	
100	2.2	2.0	1 MHz	840	900		No spec	
101	7.0	6.0	10 Hz	200	200		200	
102	7.0	6.0	20 Hz	66	67		63	

원문: Fluke Calibration 5790B 설명서 · 제조사 원문 자료입니다. 사양은 제조사 사정에 따라 변경될 수 있습니다.

Step No.	5790B Range	Test Voltage (V)	Frequency	90 Day Absolute AC Error Spec. (±ppm)	1 Yr. Absolute AC Error Spec. (±ppm)	Measured Absolute AC Error (PPM)	2 Yr AC-DC Error Spec. (±ppm)	Measured AC-DC Error (PPM)
104	7.0	6.0	40 Hz	22	24		18	
105	7.0	6.0	1 kHz	22	24		18	
106	7.0	6.0	20 kHz	22	24		18	
107	7.0	6.0	50 kHz	46	48		44	
108	7.0	6.0	100 kHz	80	81		No spec	
109	7.0	6.0	300 kHz	180	190		No spec	
110	7.0	6.0	500 kHz	380	400		No spec	
111	7.0	6.0	1 MHz	1100	1200		No spec	
113	22	20.0	10 Hz	200	200		123	
114	22	20.0	20 Hz	66	67		123	
115	22	20.0	40 Hz	25	27		21	
116	22	20.0	1 kHz	25	27		21	
117	22	20.0	20 kHz	25	27		21	
119	22	20.0	50 kHz	46	48		44	
120	22	20.0	100 kHz	80	81		No spec	
121	22	20.0	300 kHz	180	190		No spec	
122	22	20.0	500 kHz	380	400		No spec	
123	22	20.0	1 MHz	1100	1200		No spec	
125	70	20.0	500 kHz	400	410		No spec	
126	70	20.0	1 MHz	1100	1200		No spec	
127	70	60.0	10 Hz	200	200		200	
128	70	60.0	20 Hz	67	68		63	
129	70	60.0	40 Hz	30	32		25	
130	70	60.0	1 kHz	30	32		25	
131	70	60.0	20 kHz	30	32		25	
132	70	60.0	50 kHz	56	57		55	
133	70	60.0	100 kHz	91	94		No spec	
134	70	60.0	300 kHz	190	200		No spec	
135	220	60	300 kHz	210	210		No spec	
136	220	200.0	10 Hz	200	200		200	
137	220	200.0	20 Hz	67	68		63	
138	220	200.0	40 Hz	29	31		23	

원문: Fluke Calibration 5790B 설명서 · 제조사 원문 자료입니다. 사양은 제조사 사정에 따라 변경될 수 있습니다.

Step No.	5790B Range	Test Voltage (V)	Frequency	90 Day Absolute AC Error Spec. (±ppm)	1 Yr. Absolute AC Error Spec. (±ppm)	Measured Absolute AC Error (PPM)	2 Yr AC-DC Error Spec. (±ppm)	Measured AC-DC Error (PPM)
139	220	200.0	1 kHz	29	31		23	
140	220	200.0	20 kHz	29	31		23	
141	220	200.0	50 kHz	67	69		63	
142	220	200.0	100 kHz	96	98		No spec	
143	700	600.0	40 Hz	39	41		36	
144	700	600.0	1 kHz	39	41		36	
145	700	600.0	20 kHz	39	41		36	
146	700	600.0	50 kHz	120	130		No spec	
147	700	600.0	100 kHz	400	500		No spec	
148	1000	1000.0	100 Hz	37	38		33	
149	1000	1000.0	1 kHz	37	38		33	
150	1000	1000.0	20 kHz	37	38		33	
151	1000	1000.0	30 kHz	120	130		No spec	
152	1000	600.0	40 Hz	37	38		33	
153	1000	600.0	50 kHz	120	130		No spec	
154	1000	600.0	100 kHz	400	500		No spec	

Table 3-14a. Main Input Frequency Verification

Step No.	5790B Range	Voltage (V)[1]	Test Frequency	1-Year Frequency Spec	Measured Frequency Error
1	2.2	2	10 Hz	.01 Hz	
2	2.2	2	1 kHz	.0003 kHz	
3	2.2	2	1 MHz	.0003 MHz	

[1] Apply the test voltage into the Product (INPUT 1 or INPUT 2) from the 5730A and monitor using the Tektronix FCA3000 counter. The “Measured Error” is the deviation of the Product from the counter.

원문: Fluke Calibration 5790B 설명서 · 제조사 원문 자료입니다. 사양은 제조사 사정에 따라 변경될 수 있습니다.

Verifying AC-DC Difference for Regions I and III (220 mV through 1000 V Range)

Calculate the ac-dc difference error by comparing the ac-dc difference of the source as measured by the Product and the 792A. To do this, use the instrument setup and technique as described under “AC Calibration”.

Proceed as follows to verify ac-dc difference in regions I and III:

1. Use the setup in Figure 3-8 and the procedure under “AC Calibration”.
2. For each point, take ac and dc measurements and enter them in copies of worksheet Figure 3-14 or Figure 3-15. Use Figure 3-14 and characterized dc settings for the 700 mV, 220 mV and 70 mV ranges as follows: Set the 5730A to nominal, then use the knob to adjust for the error display you recorded in Table 3-2. The procedure to obtain those settings is described under “Characterizing the DC Source” at the beginning of the calibration instructions in this chapter. Use Figure 3-16 and nominal dc outputs for ranges other than those listed earlier in this step.
3. Calculate the ac-dc difference error as shown in Figure 3-15 or 3-16. Enter the result in the Table 3-14.

Verifying Absolute AC Error for Region IV (70 mV through 700 mV Range)

You calculate absolute ac error by measuring the absolute ac of the source signal and comparing it to the ac measured by the Product.

Proceed as follows to verify absolute ac for Region IV:

1. Use the setup in Figure 3-8 and the procedure under “AC Calibration”.
2. For each point, take the ac and dc measurements and enter them in Figure 3-16. Use characterized dc settings as follows: Set the 5730A to nominal, then use the knob to adjust for the error display recorded in Table 3-2.
3. Calculate the absolute ac error as shown in Figure 3-16. Enter the result in Table 3-14.

원문: Fluke Calibration 5790B 설명서 · 제조사 원문 자료입니다. 사양은 제조사 사정에 따라 변경될 수 있습니다.

TS-TL-FLK-051

we measure, we calibrate, we validate.
㈜테솔 · www.tessol.com TS-TL-FLK-051 83 / 172
KOLAS 국제공인교정기관 · ISO/IEC 17025

VOLTAGE (NOMINAL) _____

FREQUENCY _____

5730A ERROR DISPLAY FROM TABLE 3-2, POSITIVE _____

ERROR DISPLAY FROM TABLE 3-2, NEGATIVE _____

792A CORRECTION (PPM) _____

	792A	5790B
+DC		
-DC		
$DC_{AVERAGE}$	DC_{792} =	DC_{5790} =
AC	AC_{792} =	AC_{5790} =
AC-DC ERROR =		

$$DC_{AVERAGE} = \left(\frac{|+DC| + |-DC|}{2} \right)$$

$$\text{AC - DC ERROR (PPM)} = \left(\left[\frac{DC_{5790} - AC_{5790}}{DC_{5790}} \right] - \left[\frac{DC_{792} - AC_{792}}{DC_{792}} \right] \right) * 10^6 + 792\ CORR$$

elu043.eps

Figure 3-14. Worksheet for AC-DC Error, 70 mV through 700 mV Ranges

원문: Fluke Calibration 5790B 설명서 · 제조사 원문 자료입니다. 사양은 제조사 사정에 따라 변경될 수 있습니다.

VOLTAGE (NOMINAL) _____

FREQUENCY _____

792A CORRECTION (PPM) _____

	792A	5790B
+DC		
-DC		
$DC_{AVERAGE}$	DC_{792} =	DC_{5790} =
AC	AC_{792} =	AC_{5790} =
AC-DC ERROR =		

$$DC_{AVERAGE} = \left(\frac{|+DC| + |-DC|}{2}\right)$$

$$\text{AC - DC ERROR (PPM)} = \left(\left[\frac{DC_{5790} - AC_{5790}}{DC_{5790}}\right] - \left[\frac{DC_{792} - AC_{792}}{DC_{792}}\right]\right) \cdot 10^6 + 792\ \text{CORR}$$

elu044.eps

Figure 3-15. Worksheet for AC-DC Error, All Other Ranges

원문: Fluke Calibration 5790B 설명서 · 제조사 원문 자료입니다. 사양은 제조사 사정에 따라 변경될 수 있습니다.

VOLTAGE (NOMINAL) _____

FREQUENCY _____

ERROR DISPLAY FROM TABLE 3-2, POSITIVE _____

ERROR DISPLAY FROM TABLE 3-2, NEGATIVE _____

792A CORRECTION (PPM) _____

	792A	5790B
+DC		
-DC		
$DC_{AVERAGE}$	DC_{792} =	
AC	AC_{792} =	AC_{5790} =
AC ERROR =		

$$DC_{AVERAGE} = \left(\frac{|+DC| + |-DC|}{2}\right)$$

$$\text{AC ERROR (PPM)} = \left[\frac{AC_{5790} - DC_{NOMINAL} * \left(\frac{AC_{792}}{DC_{792}} + \frac{792\ CORR}{10^6}\right)}{DC_{NOMINAL}}\right] * 10^6$$

elu045.eps

Figure 3-16. Worksheet for Absolute AC Error, 70 mV through 700 mV Ranges

원문: Fluke Calibration 5790B 설명서 · 제조사 원문 자료입니다. 사양은 제조사 사정에 따라 변경될 수 있습니다.

Verifying Absolute AC Error for Region II (2.2 V through 1000 V Range)

Because of the loading of 792A in its 700 mV to 1000 V ranges, the dc voltage at the reference point of the calibration (center of the tee) is not the same as the dc voltage at the output terminals of the source unless sense terminals are provided for the source to the tee. If sense terminals are provided for dc, the absolute ac error may be determined as for region II; however, the sense connections should be removed when the ac measurements are being made.

Alternatively, you can determine dc errors and ac-dc errors independently, then combine them. This is the procedure presented here.

In this case, you take the measurements and make calculations in the same way as Regions I and III to obtain the ac-dc errors (You may have already calculated these errors if you are verifying both the ac-dc and the absolute ac performance of the instrument). You then take dc measurements and calculate dc errors. Combine the errors to obtain absolute ac error.

Proceed as follows to use the error combination method:

1. To determine the dc errors, connect the test equipment as shown in Figure 3-5.
2. Use characterized 5730A dc settings as follows: Set the 5730A to nominal, then use the knob to adjust for the error display you recorded in Table 3-2. Take dual polarity dc readings and record them in Figure 3-18.
3. Calculate the dc error as shown in Figure 3-17.
4. Combine the dc errors and the ac-dc errors using the following equation to obtain the absolute ac reading error and enter the result in Table 3-14. AC READING ERROR = DC ERROR - (AC - DC ERROR).

원문: Fluke Calibration 5790B 설명서 · 제조사 원문 자료입니다. 사양은 제조사 사정에 따라 변경될 수 있습니다.

TS-TL-FLK-051

we measure, we calibrate, we validate.
㈜테솔 · www.tessol.com TS-TL-FLK-051 87 / 172
KOLAS 국제공인교정기관 · ISO/IEC 17025

VOLTAGE (NOMINAL) _____

ERROR DISPLAY FROM TABLE 3-2, POSITIVE _____

ERROR DISPLAY FROM TABLE 3-2, NEGATIVE _____

	5790B READING
+DC	
-DC	
DC 5790 =	
DC ERROR =	

$$DC_{5790} = \left(\frac{I{+}DCI + I{-}DCI}{2}\right)$$

$$\text{DC ERROR (PPM)} = \left(\frac{DC_{5790} - DC_{NOMINAL}}{DC_{NOMINAL}}\right) * 10^6$$

elu046.eps

Figure 3-17. Worksheet for DC Error, 2.2 V through 1000 V Ranges

원문: Fluke Calibration 5790B 설명서 · 제조사 원문 자료입니다. 사양은 제조사 사정에 따라 변경될 수 있습니다.

Verifying Absolute AC Error for Region V (2.2 mV through 22 mV)

For the 7 mV through the 22 mV ranges, use a bootstrapping technique. After you verify the 70 mV range, apply each test voltage and frequency to both the verified range and the range under test. Accept the reading on the verified range after showing that it is operating within specifications. Step down through the ranges as described in the calibration procedures and shown in Figure 3-9 until the 2.2 mV range is verified. On each range tested, use the following formula and enter the results in Table 3-12.

$$AC_{err} = \left(\frac{AC_{DUT_R} - AC_{DUT_Ver_R}}{AC_{Nominal}}\right) * 10^6 - AC_{DUT_Ver_Err} - AC_{DUT_Ver_R_Linearity_Err}$$

Where,

AC_{err} is the final result for the amplitude/range under test measured in µV/V.

AC_{DUT_R} is the mV measurement of the DUT in the range being verified.

$AC_{DUT_Ver_R}$ is the bottom scale mV measurement of the DUT in the upper range.

$AC_{Nominal}$ is the nominal in mV

$AC_{DUT_Ver_R_Err}$ is the measurement error of the upper range from which we bootstrap in µV/V

$AC_{DUT_Ver_R_Linearity_Err}$ is the measured range linearity error in µV/V.

$$AC_{DUT_Ver_R_Linearity_Err} = AC_{DUT_Ver_R_1/2Scale_Err} - AC_{DUT_Ver_R_FullScale_Err}$$

Where linearity of the upper range is based on measurements with 100:1 resistive divider relative to Fluke 792A. Components are all in µV/V relative to Fluke 792A and use of 100:1 resistive divider during both steps.

If Wideband option is not present, proceed to the *Update Full Verification Date* section. Otherwise proceed with *Verifying the Wideband AC Option*.

원문: Fluke Calibration 5790B 설명서 · 제조사 원문 자료입니다. 사양은 제조사 사정에 따라 변경될 수 있습니다.

Verifying the Wideband AC Option

Wideband verification verifies that the 5790B WIDEBAND input (requires Option 5790B/3, 5790B/5, or 5790B/AF) is within tolerance. There are two worksheets and one test record to facilitate this procedure. You will need 1 copy of Table 3-15, 8 copies of Table 3-16 (one for each voltage range) and 1 copy of the overall test record, Table 3-17.

Note

If verifying Option 5790B/3, frequencies above 30 MHz are not applicable.

Table 3-15. Wideband 1 kHz Gain Verification Worksheet

Range	Nominal @ 1 kHz	Measured by 5790B	5730A Value (Recorded in Table 3-8)	5790B Error	Lower Limit	Upper Limit
7 V	3.2 V					
2.2 V	2.0 V					
2.2 V	1.0 V					
2.2 V	0.64 V					
700 mV	320 mV					
220 mV	100 mV					
70 mV	32 mV					
22 mV	10 mV					
7 mV	3.2 mV					
2.2 mV	1 mV					
7 mV	3.2 mV					

원문: Fluke Calibration 5790B 설명서 · 제조사 원문 자료입니다. 사양은 제조사 사정에 따라 변경될 수 있습니다.

Table 3-16. Wideband Flatness Verification Worksheet

				_____Range					
Frequency	EL1100 Corr. (PPM)	5790B Error (PPM)	5730A Error (PPM)	10 dB Error (PPM)	20 dB Error (PPM)	20 dB Error (PPM)	20 dB Error (PPM)	Total Error(PPM)	1 kHz Ref Error (Enter Once)
10 Hz									X
20 Hz									X
50 Hz									X
105 Hz									X
200 Hz									X
2 kHz									X
10 kHz									X
20 kHz									X
50 kHz									X
120 kHz									X
200 kHz									X
500 kHz									X
700 kHz									X
1 MHz									X
1.2 MHz									X
2 MHz									X
3 MHz									X
4 MHz									X
6 MHz									X
8 MHz									X
9 MHz									X
10 MHz									X
12 MHz									X
15 MHz									X
17 MHz									X
20 MHz									X
23 MHz									X
26 MHz									X
28 MHz									X
30 MHz									X
35 MHz									X
40 MHz									X
45 MHz									X
50 MHz									X

원문: Fluke Calibration 5790B 설명서 · 제조사 원문 자료입니다. 사양은 제조사 사정에 따라 변경될 수 있습니다.

Table 3-17. Wideband Verification Test Record

Step No.	5790B Range	Test Voltage	Frequency	1 Yr Flatness Specification	Measured Flatness Error (%)	90 Days Absolute Error Spec (%)	Measured Absolute Error (%)
1	7 V	3.2 V	10 Hz	0.10		0.31	
2	7 V	3.2 V	20 Hz	0.10		0.31	
3	7 V	3.2 V	50 Hz	0.03		0.31	
4	7 V	3.2 V	105 Hz	0.03		0.31	
5	7 V	3.2 V	200 Hz	0.03		0.31	
7	7 V	3.2 V	2 kHz	0.03		0.31	
8	7 V	3.2 V	10 kHz	0.03		0.31	
9	7 V	3.2 V	20 kHz	0.03		0.31	
10	7 V	3.2 V	50 kHz	0.03		0.31	
11	7 V	3.2 V	120 kHz	0.03		0.31	
12	7 V	3.2 V	200 kHz	0.03		0.31	
13	7 V	3.2 V	500 kHz	0.03		0.31	
14	7 V	3.2 V	700 kHz	0.05		No Spec	No Spec
15	7 V	3.2 V	1 MHz	0.05		No Spec	No Spec
16	7 V	3.2 V	1.2 MHz	0.05		No Spec	No Spec
17	7 V	3.2 V	2 MHz	0.05		No Spec	No Spec
18	7 V	3.2 V	3 MHz	0.10		No Spec	No Spec
19	7 V	3.2 V	4 MHz	0.10		No Spec	No Spec
20	7 V	3.2 V	6 MHz	0.10		No Spec	No Spec
21	7 V	3.2 V	8 MHz	0.10		No Spec	No Spec
22	7 V	3.2 V	9 MHz	0.10		No Spec	No Spec
23	7 V	3.2 V	10 MHz	0.10		No Spec	No Spec
24	7 V	3.2 V	12 MHz	0.15		No Spec	No Spec
25	7 V	3.2 V	15 MHz	0.15		No Spec	No Spec
26	7 V	3.2 V	17 MHz	0.15		No Spec	No Spec
27	7 V	3.2 V	20 MHz	0.15		No Spec	No Spec
28	7 V	3.2 V	23 MHz	0.35		No Spec	No Spec
29	7 V	3.2 V	26 MHz	0.35		No Spec	No Spec
30	7 V	3.2 V	28 MHz	0.35		No Spec	No Spec
31	7 V	3.2 V	30 MHz	0.35		No Spec	No Spec

원문: Fluke Calibration 5790B 설명서 · 제조사 원문 자료입니다. 사양은 제조사 사정에 따라 변경될 수 있습니다.

Step No.	5790B Range	Test Voltage	Frequency	1 Yr Flatness Specification	Measured Flatness Error (%)	90 Days Absolute Error Spec (%)	Measured Absolute Error (%)
32	7 V	3.2 V	35 MHz	0.35		No Spec	No Spec
33	7 V	3.2 V	40 MHz	0.35		No Spec	No Spec
34	7 V	3.2 V	45 MHz	0.35		No Spec	No Spec
35	7 V	3.2 V	50 MHz	0.35		No Spec	No Spec
36	2.2 V	1.0 V	10 Hz	0.10		0.33	
37	2.2 V	1.0 V	20 Hz	0.10		0.33	
38	2.2 V	1.0 V	50 Hz	0.03		0.33	
39	2.2 V	1.0 V	105 Hz	0.03		0.33	
40	2.2 V	1.0 V	200 Hz	0.03		0.33	
42	2.2 V	1.0 V	2 kHz	0.03		0.33	
43	2.2 V	1.0 V	10 kHz	0.03		0.33	
44	2.2 V	1.0 V	20 kHz	0.03		0.33	
45	2.2 V	1.0 V	50 kHz	0.03		0.33	
46	2.2 V	1.0 V	120 kHz	0.03		0.33	
47	2.2 V	1.0 V	200 kHz	0.03		0.33	
48	2.2 V	1.0 V	500 kHz	0.03		0.33	
49	2.2 V	1.0 V	700 kHz	0.05		No Spec	No Spec
50	2.2 V	1.0 V	1 MHz	0.05		No Spec	No Spec
51	2.2 V	1.0 V	1.2 MHz	0.05		No Spec	No Spec
52	2.2 V	1.0 V	2 MHz	0.05		No Spec	No Spec
53	2.2 V	1.0 V	3 MHz	0.10		No Spec	No Spec
54	2.2 V	1.0 V	4 MHz	0.10		No Spec	No Spec
55	2.2 V	1.0 V	6 MHz	0.10		No Spec	No Spec
56	2.2 V	1.0 V	8 MHz	0.10		No Spec	No Spec
57	2.2 V	1.0 V	9 MHz	0.10		No Spec	No Spec
58	2.2 V	1.0 V	10 MHz	0.10		No Spec	No Spec
59	2.2 V	1.0 V	12 MHz	0.15		No Spec	No Spec
60	2.2 V	1.0 V	15 MHz	0.15		No Spec	No Spec
61	2.2 V	1.0 V	17 MHz	0.15		No Spec	No Spec
62	2.2 V	1.0 V	20 MHz	0.15		No Spec	No Spec
63	2.2 V	1.0 V	23 MHz	0.35		No Spec	No Spec
64	2.2 V	1.0 V	26 MHz	0.35		No Spec	No Spec

원문: Fluke Calibration 5790B 설명서 · 제조사 원문 자료입니다. 사양은 제조사 사정에 따라 변경될 수 있습니다.

5790B
Service Manual

Step No.	5790B Range	Test Voltage	Frequency	1 Yr Flatness Specification	Measured Flatness Error (%)	90 Days Absolute Error Spec (%)	Measured Absolute Error (%)
65	2.2 V	1.0 V	28 MHz	0.35		No Spec	No Spec
66	2.2 V	1.0 V	30 MHz	0.35		No Spec	No Spec
67	2.2 V	1.0 V	35 MHz	0.35		No Spec	No Spec
68	2.2 V	1.0 V	40 MHz	0.35		No Spec	No Spec
69	2.2 V	1.0 V	45 MHz	0.35		No Spec	No Spec
70	2.2 V	1.0 V	50 MHz	0.35		No Spec	No Spec
71	700 mV	320 mV	10 Hz	0.10		0.36	
72	700 mV	320 mV	20 Hz	0.10		0.36	
73	700 mV	320 mV	50 Hz	0.03		0.36	
74	700 mV	320 mV	105 Hz	0.03		0.36	
75	700 mV	320 mV	200 Hz	0.03		0.36	
77	700 mV	320 mV	2 kHz	0.03		0.36	
78	700 mV	320 mV	10 kHz	0.03		0.36	
79	700 mV	320 mV	20 kHz	0.03		0.36	
80	700 mV	320 mV	50 kHz	0.03		0.36	
81	700 mV	320 mV	120 kHz	0.03		0.36	
82	700 mV	320 mV	200 kHz	0.03		0.36	
83	700 mV	320 mV	500 kHz	0.03		0.36	
84	700 mV	320 mV	700 kHz	0.05		No Spec	No Spec
85	700 mV	320 mV	1 MHz	0.05		No Spec	No Spec
86	700 mV	320 mV	1.2 MHz	0.05		No Spec	No Spec
87	700 mV	320 mV	2 MHz	0.05		No Spec	No Spec
88	700 mV	320 mV	3 MHz	0.10		No Spec	No Spec
89	700 mV	320 mV	4 MHz	0.10		No Spec	No Spec
90	700 mV	320 mV	6 MHz	0.10		No Spec	No Spec
91	700 mV	320 mV	8 MHz	0.10		No Spec	No Spec
92	700 mV	320 mV	9 MHz	0.10		No Spec	No Spec
93	700 mV	320 mV	10 MHz	0.10		No Spec	No Spec
94	700 mV	320 mV	12 MHz	0.15		No Spec	No Spec
95	700 mV	320 mV	15 MHz	0.15		No Spec	No Spec
96	700 mV	320 mV	17 MHz	0.15		No Spec	No Spec
97	700 mV	320 mV	20 MHz	0.15		No Spec	No Spec

원문: Fluke Calibration 5790B 설명서 · 제조사 원문 자료입니다. 사양은 제조사 사정에 따라 변경될 수 있습니다.

Step No.	5790B Range	Test Voltage	Frequency	1 Yr Flatness Specification	Measured Flatness Error (%)	90 Days Absolute Error Spec (%)	Measured Absolute Error (%)
98	700 mV	320 mV	23 MHz	0.35		No Spec	No Spec
99	700 mV	320 mV	26 MHz	0.35		No Spec	No Spec
100	700 mV	320 mV	28 MHz	0.35		No Spec	No Spec
101	700 mV	320 mV	30 MHz	0.35		No Spec	No Spec
102	700 mV	320 mV	35 MHz	0.35		No Spec	No Spec
103	700 mV	320 mV	40 MHz	0.35		No Spec	No Spec
104	700 mV	320 mV	45 MHz	0.35		No Spec	No Spec
105	700 mV	320 mV	50 MHz	0.35		No Spec	No Spec
106	220 mV	100 mV	10 Hz	0.10		0.36	
107	220 mV	100 mV	20 Hz	0.10		0.36	
108	220 mV	100 mV	50 Hz	0.04		0.36	
109	220 mV	100 mV	105 Hz	0.04		0.36	
110	220 mV	100 mV	200 Hz	0.04		0.36	
112	220 mV	100 mV	2 kHz	0.04		0.36	
113	220 mV	100 mV	10 kHz	0.04		0.36	
114	220 mV	100 mV	20 kHz	0.04		0.36	
115	220 mV	100 mV	50 kHz	0.04		0.36	
116	220 mV	100 mV	120 kHz	0.04		0.36	
117	220 mV	100 mV	200 kHz	0.04		0.36	
118	220 mV	100 mV	500 kHz	0.04		0.36	
119	220 mV	100 mV	700 kHz	0.05		No Spec	No Spec
120	220 mV	100 mV	1 MHz	0.05		No Spec	No Spec
121	220 mV	100 mV	1.2 MHz	0.05		No Spec	No Spec
122	220 mV	100 mV	2 MHz	0.05		No Spec	No Spec
123	220 mV	100 mV	3 MHz	0.10		No Spec	No Spec
124	220 mV	100 mV	4 MHz	0.10		No Spec	No Spec
125	220 mV	100 mV	6 MHz	0.10		No Spec	No Spec
126	220 mV	100 mV	8 MHz	0.10		No Spec	No Spec
127	220 mV	100 mV	9 MHz	0.10		No Spec	No Spec
128	220 mV	100 mV	10 MHz	0.10		No Spec	No Spec
129	220 mV	100 mV	12 MHz	0.15		No Spec	No Spec
130	220 mV	100 mV	15 MHz	0.15		No Spec	No Spec

원문: Fluke Calibration 5790B 설명서 · 제조사 원문 자료입니다. 사양은 제조사 사정에 따라 변경될 수 있습니다.

5790B
Service Manual

Step No.	5790B Range	Test Voltage	Frequency	1 Yr Flatness Specification	Measured Flatness Error (%)	90 Days Absolute Error Spec (%)	Measured Absolute Error (%)
131	220 mV	100 mV	17 MHz	0.15		No Spec	No Spec
132	220 mV	100 mV	20 MHz	0.15		No Spec	No Spec
133	220 mV	100 mV	23 MHz	0.35		No Spec	No Spec
134	220 mV	100 mV	26 MHz	0.35		No Spec	No Spec
135	220 mV	100 mV	28 MHz	0.35		No Spec	No Spec
136	220 mV	100 mV	30 MHz	0.35		No Spec	No Spec
137	220 mV	100 mV	35 MHz	0.35		No Spec	No Spec
138	220 mV	100 mV	40 MHz	0.35		No Spec	No Spec
139	220 mV	100 mV	45 MHz	0.35		No Spec	No Spec
140	70 mV	32 mV	50 MHz	0.35		No Spec	No Spec
141	70 mV	32 mV	20 Hz	0.10		0.46	
142	70 mV	32 mV	50 Hz	0.05		0.46	
143	70 mV	32 mV	105 Hz	0.05		0.46	
144	70 mV	32 mV	200 Hz	0.05		0.46	
146	70 mV	32 mV	2 kHz	0.05		0.46	
147	70 mV	32 mV	10 kHz	0.05		0.46	
148	70 mV	32 mV	20 kHz	0.05		0.46	
149	70 mV	32 mV	50 kHz	0.05		0.46	
150	70 mV	32 mV	120 kHz	0.05		0.46	
151	70 mV	32 mV	200 kHz	0.05		0.46	
152	70 mV	32 mV	500 kHz	0.05		0.46	
153	70 mV	32 mV	700 kHz	0.05		No Spec	No Spec
154	70 mV	32 mV	1 MHz	0.05		No Spec	No Spec
155	70 mV	32 mV	1.2 MHz	0.05		No Spec	No Spec
156	70 mV	32 mV	2 MHz	0.05		No Spec	No Spec
157	70 mV	32 mV	3 MHz	0.10		No Spec	No Spec
158	70 mV	32 mV	4 MHz	0.10		No Spec	No Spec
159	70 mV	32 mV	6 MHz	0.10		No Spec	No Spec
160	70 mV	32 mV	8 MHz	0.10		No Spec	No Spec
161	70 mV	32 mV	9 MHz	0.10		No Spec	No Spec
162	70 mV	32 mV	10 MHz	0.10		No Spec	No Spec
163	70 mV	32 mV	12 MHz	0.15		No Spec	No Spec

원문: Fluke Calibration 5790B 설명서 · 제조사 원문 자료입니다. 사양은 제조사 사정에 따라 변경될 수 있습니다.

Step No.	5790B Range	Test Voltage	Frequency	1 Yr Flatness Specification	Measured Flatness Error (%)	90 Days Absolute Error Spec (%)	Measured Absolute Error (%)
164	70 mV	32 mV	15 MHz	0.15		No Spec	No Spec
165	70 mV	32 mV	17 MHz	0.15		No Spec	No Spec
166	70 mV	32 mV	20 MHz	0.15		No Spec	No Spec
167	70 mV	32 mV	23 MHz	0.35		No Spec	No Spec
168	70 mV	32 mV	26 MHz	0.35		No Spec	No Spec
169	70 mV	32 mV	28 MHz	0.35		No Spec	No Spec
170	70 mV	32 mV	30 MHz	0.35		No Spec	No Spec
171	70 mV	32 mV	35 MHz	0.35		No Spec	No Spec
172	70 mV	32 mV	40 MHz	0.35		No Spec	No Spec
173	70 mV	32 mV	45 MHz	0.35		No Spec	No Spec
174	70 mV	32 mV	50 MHz	0.35		No Spec	No Spec
175	22 mV	10 mV	10 Hz	0.10		0.5	
176	22 mV	10 mV	20 Hz	0.10		0.5	
177	22 mV	10 mV	50 Hz	0.05		0.5	
178	22 mV	10 mV	105 Hz	0.05		0.5	
179	22 mV	10 mV	200 Hz	0.05		0.5	
181	22 mV	10 mV	2 kHz	0.05		0.5	
182	22 mV	10 mV	10 kHz	0.05		0.5	
183	22 mV	10 mV	20 kHz	0.05		0.5	
184	22 mV	10 mV	50 kHz	0.05		0.5	
185	22 mV	10 mV	120 kHz	0.05		0.5	
186	22 mV	10 mV	200 kHz	0.07		0.5	
187	22 mV	10 mV	500 kHz	0.07		0.5	
188	22 mV	10 mV	700 kHz	0.07		No Spec	No Spec
189	22 mV	10 mV	1 MHz	0.07		No Spec	No Spec
190	22 mV	10 mV	1.2 MHz	0.07		No Spec	No Spec
191	22 mV	10 mV	2 MHz	0.07		No Spec	No Spec
192	22 mV	10 mV	3 MHz	0.10		No Spec	No Spec
193	22 mV	10 mV	4 MHz	0.10		No Spec	No Spec
194	22 mV	10 mV	6 MHz	0.10		No Spec	No Spec
195	22 mV	10 mV	8 MHz	0.10		No Spec	No Spec
196	22 mV	10 mV	9 MHz	0.10		No Spec	No Spec

원문: Fluke Calibration 5790B 설명서 · 제조사 원문 자료입니다. 사양은 제조사 사정에 따라 변경될 수 있습니다.

5790B
Service Manual

Step No.	5790B Range	Test Voltage	Frequency	1 Yr Flatness Specification	Measured Flatness Error (%)	90 Days Absolute Error Spec (%)	Measured Absolute Error (%)
197	22 mV	10 mV	10 MHz	0.10		No Spec	No Spec
198	22 mV	10 mV	12 MHz	0.17		No Spec	No Spec
199	22 mV	10 mV	15 MHz	0.17		No Spec	No Spec
200	22 mV	10 mV	17 MHz	0.17		No Spec	No Spec
201	22 mV	10 mV	20 MHz	0.17		No Spec	No Spec
202	22 mV	10 mV	23 MHz	0.37		No Spec	No Spec
203	22 mV	10 mV	26 MHz	0.37		No Spec	No Spec
204	22 mV	10 mV	28 MHz	0.37		No Spec	No Spec
205	22 mV	10 mV	30 MHz	0.37		No Spec	No Spec
206	22 mV	10 mV	35 MHz	0.37		No Spec	No Spec
207	22 mV	10 mV	40 MHz	0.37		No Spec	No Spec
208	22 mV	10 mV	45 MHz	0.37		No Spec	No Spec
209	22 mV	10 mV	50 MHz	0.37		No Spec	No Spec
210	7 mV	3.2 mV	10 Hz	0.10		0.55	
211	7 mV	3.2 mV	20 kHz	0.10		0.55	
212	7 mV	3.2 mV	50 kHz	0.05		0.55	
213	7 mV	3.2 mV	105 kHz	0.05		0.55	
214	7 mV	3.2 mV	200 kHz	0.05		0.55	
216	7 mV	3.2 mV	2 kHz	0.05		0.55	
217	7 mV	3.2 mV	10 kHz	0.05		0.55	
218	7 mV	3.2 mV	20 kHz	0.05		0.55	
219	7 mV	3.2 mV	50 kHz	0.05		0.55	
220	7 mV	3.2 mV	120 kHz	0.05		0.55	
221	7 mV	3.2 mV	200 kHz	0.10		0.55	
222	7 mV	3.2 mV	500 kHz	0.10		0.55	
223	7 mV	3.2 mV	700 kHz	0.10		No Spec	No Spec
224	7 mV	3.2 mV	1 MHz	0.10		No Spec	No Spec
225	7 mV	3.2 mV	1.2 MHz	0.10		No Spec	No Spec
226	7 mV	3.2 mV	2 MHz	0.10		No Spec	No Spec
227	7 mV	3.2 mV	3 MHz	0.13		No Spec	No Spec
228	7 mV	3.2 mV	4 MHz	0.13		No Spec	No Spec
229	7 mV	3.2 mV	6 MHz	0.13		No Spec	No Spec

원문: Fluke Calibration 5790B 설명서 · 제조사 원문 자료입니다. 사양은 제조사 사정에 따라 변경될 수 있습니다.

Step No.	5790B Range	Test Voltage	Frequency	1 Yr Flatness Specification	Measured Flatness Error (%)	90 Days Absolute Error Spec (%)	Measured Absolute Error (%)
230	7 mV	3.2 mV	8 MHz	0.13		No Spec	No Spec
231	7 mV	3.2 mV	9 MHz	0.13		No Spec	No Spec
232	7 mV	3.2 mV	10 MHz	0.13		No Spec	No Spec
233	7 mV	3.2 mV	12 MHz	0.20		No Spec	No Spec
234	7 mV	3.2 mV	15 MHz	0.20		No Spec	No Spec
235	7 mV	3.2 mV	17 MHz	0.20		No Spec	No Spec
236	7 mV	3.2 mV	20 MHz	0.20		No Spec	No Spec
237	7 mV	3.2 mV	23 MHz	0.40		No Spec	No Spec
238	7 mV	3.2 mV	26 MHz	0.40		No Spec	No Spec
239	7 mV	3.2 mV	28 MHz	0.40		No Spec	No Spec
240	7 mV	3.2 mV	30 MHz	0.40		No Spec	No Spec
241	7 mV	3.2 mV	35 MHz	0.40		No Spec	No Spec
242	7 mV	3.2 mV	40 MHz	0.40		No Spec	No Spec
243	7 mV	3.2 mV	45 MHz	0.40		No Spec	No Spec
244	7 mV	3.2 mV	50 MHz	0.40		No Spec	No Spec
245	2.2 mV	1 mV	10 Hz	0.10		0.62	
246	2.2 mV	1 mV	20 Hz	0.10		0.62	
247	2.2 mV	1 mV	50 Hz	0.05		0.62	
248	2.2 mV	1 mV	105 Hz	0.05		0.62	
249	2.2 mV	1 mV	200 Hz	0.05		0.62	
251	2.2 mV	1 mV	2 kHz	0.05		0.62	
252	2.2 mV	1 mV	10 kHz	0.05		0.62	
253	2.2 mV	1 mV	20 kHz	0.05		0.62	
254	2.2 mV	1 mV	50 kHz	0.05		0.62	
255	2.2 mV	1 mV	120 kHz	0.05		0.62	
256	2.2 mV	1 mV	200 kHz	0.16		0.62	
257	2.2 mV	1 mV	500 kHz	0.16		0.62	
258	2.2 mV	1 mV	700 kHz	0.16		No Spec	No Spec
259	2.2 mV	1 mV	1 MHz	0.16		No Spec	No Spec
260	2.2 mV	1 mV	1.2 MHz	0.16		No Spec	No Spec
261	2.2 mV	1 mV	2 MHz	0.16		No Spec	No Spec
262	2.2 mV	1 mV	3 MHz	0.26		No Spec	No Spec

원문: Fluke Calibration 5790B 설명서 · 제조사 원문 자료입니다. 사양은 제조사 사정에 따라 변경될 수 있습니다.

Step No.	5790B Range	Test Voltage	Frequency	1 Yr Flatness Specification	Measured Flatness Error (%)	90 Days Absolute Error Spec (%)	Measured Absolute Error (%)
263	2.2 mV	1 mV	4 MHz	0.26		No Spec	No Spec
264	2.2 mV	1 mV	6 MHz	0.26		No Spec	No Spec
265	2.2 mV	1 mV	8 MHz	0.26		No Spec	No Spec
266	2.2 mV	1 mV	9 MHz	0.26		No Spec	No Spec
267	2.2 mV	1 mV	10 MHz	0.26		No Spec	No Spec
268	2.2 mV	1 mV	12 MHz	0.39		No Spec	No Spec
269	2.2 mV	1 mV	15 MHz	0.39		No Spec	No Spec
270	2.2 mV	1 mV	17 MHz	0.39		No Spec	No Spec
271	2.2 mV	1 mV	20 MHz	0.39		No Spec	No Spec
272	2.2 mV	1 mV	23 MHz	0.88		No Spec	No Spec
273	2.2 mV	1 mV	26 MHz	0.88		No Spec	No Spec
274	2.2 mV	1 mV	28 MHz	0.88		No Spec	No Spec
275	2.2 mV	1 mV	30 MHz	0.88		No Spec	No Spec
276	2.2 mV	1 mV	35 MHz	0.88		No Spec	No Spec
277	2.2 mV	1 mV	40 MHz	0.88		No Spec	No Spec
278	2.2 mV	1 mV	45 MHz	0.88		No Spec	No Spec
279	2.2 mV	1 mV	50 MHz	0.88		No Spec	No Spec

Table 3-17a. Wide Band Frequency Verification

Step No.	5790B Range	Voltage (V) [1]	Test Frequency	1 Year Frequency Spec	Measured Frequency Error
1	2.2	2	10 Hz	.10 Hz	
2	2.2	2	1 MHz	.0003 MHz	
3	2.2	2	10 MHz	.003 MHz	
4	2.2	2	30 MHz	.02 MHz	
5	2.2	2	50 MHz	.02 MHz	

[1] Apply the test voltage into the Product wideband input from the 5730A Wideband output and monitor using Tektronix FCA3000 counter. The “Measured Error” is the deviation of the Product from the counter.

원문: Fluke Calibration 5790B 설명서 · 제조사 원문 자료입니다. 사양은 제조사 사정에 따라 변경될 수 있습니다.

Wideband 1-kHz Gain Verification

1. Connect the characterized 5730A wideband output with its wideband cable to the Product wideband input.
2. Set the Product to the WIDEBAND 7V range.
3. Set the 5730A to output nominal voltage specified in Table 3-15 at 1 kHz from the wideband output.
4. Read the measurement on the Product display and record in the "Measured by 5790B" column in Table 3-15. Record the 5730A actual output from Table 3-8. Calculate the error (%) in the "5790B Error" column in Table 3-15. Populate the Lower and Upper Limit columns with the appropriate limits based on the Specification Interval (user selectable).
5. Proceed through the rest of the ranges in Table 3-15.

Wideband Gain Verification, 10 Hz to 500 kHz

Gain errors at frequencies other than 1 kHz can be determined by adding the error measured at 1 kHz for that range to the error measured during wideband flatness verification. See Table 3-17.

Wideband Flatness Verification

Proceed as follows to verify WIDEBAND input flatness:

1. Characterize the ac source by following the procedure under the heading “Characterizing the AC Source” in the Wideband Calibration procedure, earlier in this chapter. Use the Wideband Flatness Verification Worksheet, Table 3-16.
2. Connect the equipment as shown in Figure 3-13.
3. The 5730A will be set to a nominal 3.2 V for all flatness verifications. The only deviation from the nominal value will be for calibration corrections for the 5730A and the attenuators.
4. Table 3-9 shows the combinations of attenuators required to scale the input signal properly for each range.
5. All ranges are verified in a similar manner.
6. Obtain 8 copies of Table 3-16 with the 5730A errors recorded in the table; one for each of the 8 voltage ranges.
7. Enter the range (7 V, 2.2 V, 700 mV, 220 mV, 70 mV, 22 mV, 7 mV, and 2.2 mV) in the box at the top of each table.
8. Enter the attenuator corrections as required for each range and add up the errors and enter in the “TOTAL ERROR” column. The total error is the sum of the errors of the 5730A and all attenuators used for that frequency.
9. Proceed to verify each range by first establishing the 1 kHz reference at the beginning of each range.
10. To establish the 1 kHz reference, set the 5730A to 3.2 V and 1 kHz. Let the Product measure this value.
11. Push the “SET REF” softkey on the Product.

원문: Fluke Calibration 5790B 설명서 · 제조사 원문 자료입니다. 사양은 제조사 사정에 따라 변경될 수 있습니다.

TS-TL-FLK-051

we measure, we calibrate, we validate.
㈜테솔 · www.tessol.com TS-TL-FLK-051 101 / 172
KOLAS 국제공인교정기관 · ISO/IEC 17025

12. Proceed to the first frequency listed in Table 3-17 and adjust the 5730A to the TOTAL ERROR value (sign and magnitude) listed in Table 3-16.
13. Read the error on the Product error display and record in the WIDEBAND input verification test record, Table 3-17.
14. Proceed to the next frequency in the table and set the 5730A to 3.2 V. (the error values are set relative to the nominal 3.2 V level). Adjust the 5730A to the TOTAL ERROR value (sign and magnitude) listed in Table 3-16, and read and record the error in Table 3-17.
15. Repeat step 14 for all frequencies in Table 3-17 for that range.
16. Proceed to the next range and establish the 1-kHz reference at 3.2 V as in step 10. Push the “SET REF” soft key on the Product, and proceed through each frequency in the table. Reset the 5730A to 3.2 V after each frequency is measured. The error values are set relative to the nominal 3.2 V level.
17. Verify all other ranges in the same way.

Verification of AF Option

The following procedure is a part of calibration only if the 5790B/AF Option is installed in your Product. 5790B with an AF Option are supplied with a dedicated cable for this option. The calibration of the Product is only valid when using the provided cable. Proceed as follows to verify the calibration performance of the AF option. Calibration is performed with a characterized 1 mW @ 50 MHz source. Characterize the source prior to use with the reference power measurement system.

Table 3-18 lists the equipment required to perform the calibration adjustment of the AF option of the product.

Table 3-18. Required Equipment for Calibration of the AF Option

Required Equipment	Manufacture and Model	Minimum use Requirements
Power meter with REF OUT	N/A	0.1 % short term stability. SWR better than 1.05
Power Meter	Tegam 1830A	Published specifications
Coaxial RF Power Standard	Tegam M1130A or Keysight 478A (Option H76)	Calibration uncertainty of 0.3 % or better.

원문: Fluke Calibration 5790B 설명서 · 제조사 원문 자료입니다. 사양은 제조사 사정에 따라 변경될 수 있습니다.

TS-TL-FLK-051

we measure, we calibrate, we validate.
㈜테솔 · www.tessol.com TS-TL-FLK-051 102 / 172
KOLAS 국제공인교정기관 · ISO/IEC 17025

1. Connect the Power Reference System (Power Meter with Coaxial RF Power Standard) to the 1 mW @ MHz source.
2. Make a measurement to establish the output of the source. This value shall be used in consecutive measurement with the product.
3. Connect the matching N-type cable supplied as part of the AF option to the Wideband input.
4. Connect to the source used in step 1.
5. Select the Wideband on the Product.
6. Select 50 MHz Cable Correction from the touch screen.
7. Select Power Menu from the touch screen.
8. Select RF Power OFF from the touch screen, which will toggle to RF Power ON.
9. The Product is now set to make measurements in mW. Select Power Unit in dBm via the touch screen if you want to display measurements in dBm instead of mW.

Note

The test record in Table 3-19 is in mW. A custom table for the test record must be created if evaluation is to be performed in dBm.

10. Turn on the characterized source.
11. Verify Product performance to specifications. Use Table 3-19 to record the measurement.

Table 3-19. 0 dBm Verification Table

Nominal	Characterized Source Output [mW]	5790B Measured [mW]	5790B Error [mW]	Error [%]	Specifications [%]
1 mW @ 50 MHz					0.46
Record the characterized source value in the "Characterized Source Output" column. Record the Product measurement in mW in the "5790B Measured" column. Calculate the Product Error in mW and in % to evaluate against specifications.					

Update Full Verification Date

Once the calibrations of dc, ac, and Wideband (if present) are complete, the full verification date may be manually updated. Select **Setup Menu>Calibration>Cal Store**. Enter passcode to Open Cal Store. Select View/Update Cal Dates. Press Update and enter the ambient Temperature then press Update.

원문: Fluke Calibration 5790B 설명서 · 제조사 원문 자료입니다. 사양은 제조사 사정에 따라 변경될 수 있습니다.

원문: Fluke Calibration 5790B 설명서 · 제조사 원문 자료입니다. 사양은 제조사 사정에 따라 변경될 수 있습니다.

Chapter 4
Maintenance

Introduction

Because this is a high-performance instrument, Fluke Calibration does not recommend that the Product be repaired to the component level. It is easy to introduce a subtle long-term stability problem by handling the circuit boards. Access procedures are provided for those who want to replace a faulty module only.

Clean the Exterior

To keep the Product looking like new, clean the case, front panel keys, and lens using a soft cloth slightly dampened with water or a non-abrasive mild cleaning solution that does not harm plastics.

⚠ Caution

Do not use aromatic hydrocarbons or chlorinated solvents for cleaning. They can damage the plastic materials used in the Product.

원문: Fluke Calibration 5790B 설명서 · 제조사 원문 자료입니다. 사양은 제조사 사정에 따라 변경될 수 있습니다.

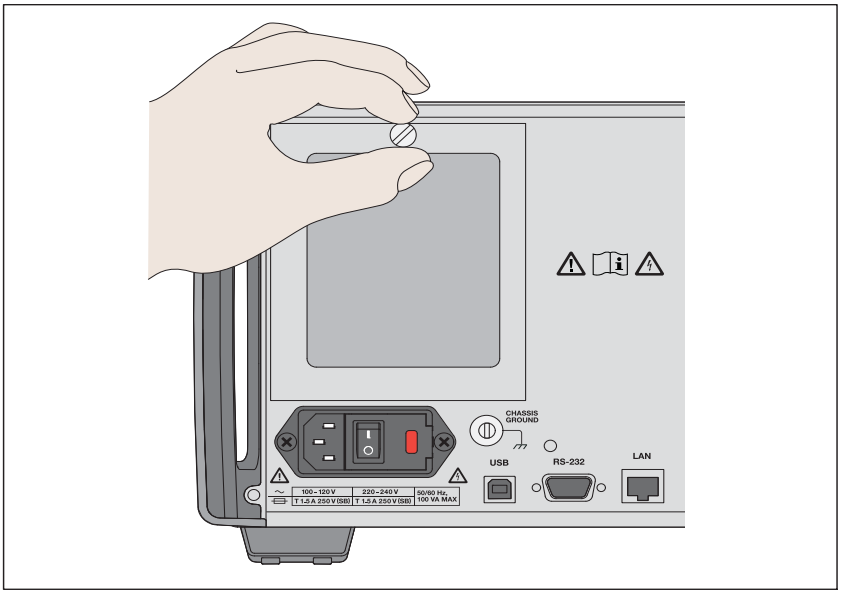

elu049.eps

Figure 4-1. Accessing the Air Filter

Fuse Replacement

Access the fuse from the rear panel. The fuse rating label below the fuse holder shows the correct replacement fuse ratings for each operating voltage.

⚠⚠Warning

To prevent possible electrical shock, fire, or personal injury:

- **Turn the Product off and remove the mains power cord. Stop for two minutes to let the power assemblies discharge before you open the fuse door.**
- **Replace a blown fuse with exact replacement only for continued protection against arc flash.**
- **Use only specified replacement fuses, see Table 4-1.**

To access the fuse, refer to Figure 4-2:

1. Disconnect the mains power cord.
2. With a standard screwdriver, release the fuse holder door.
3. Pull out the fuse holder.
4. If necessary, replace the fuse.
5. Reinsert the fuse holder.
6. Close the fuse holder door.

원문: Fluke Calibration 5790B 설명서 · 제조사 원문 자료입니다. 사양은 제조사 사정에 따라 변경될 수 있습니다.

Table 4-1. Replacement Fuses

Line Voltage Setting	Fuse Description	Fluke Part Number
⚠ 100 V to 120 V	T 1.5 A 250 V(SB)	109231
⚠ 220 V to 240 V	T 1.5 A 250 V(SB)	109231

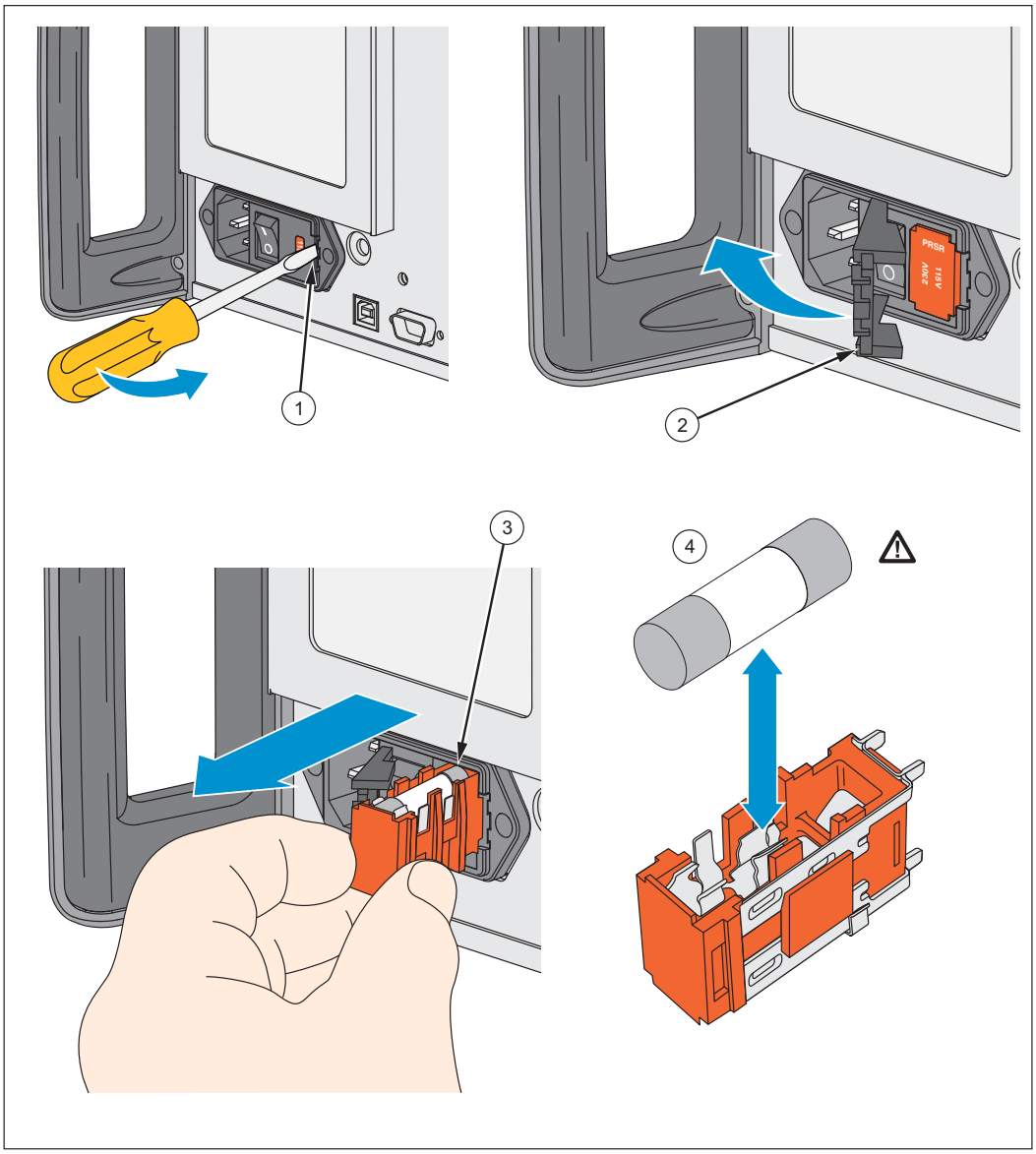

hhp003.eps

Figure 4-2. Access the Fuse

원문: Fluke Calibration 5790B 설명서 · 제조사 원문 자료입니다. 사양은 제조사 사정에 따라 변경될 수 있습니다.

Clean the Air Filter

⚠Caution

Damage caused by overheating can occur if the area around the fan is restricted, the intake air is too warm, or the air filter becomes clogged.

To prevent Product damage, make sure that the filter is completely dry before reinstallation.

The air filter must be removed and cleaned at least every 30 days, or more frequently if the Calibrator is operated in a dusty environment. The air filter is accessible from the rear panel of the Calibrator.

To clean the air filter, refer to Figure 4-3:

1. Disconnect mains power.
2. Remove the filter element.
   a. Use a tool to loosen the screw at the top of the air filter (counterclockwise).
   b. Pull the air filter retainer downward; it hinges at the bottom.
   c. Remove the filter element.
3. Clean the filter element.
   a. Wash the filter element in soapy water.
   b. Rinse the filter element in fresh running water.
   c. Shake out the excess water and allow the filter element to thoroughly dry before it is reinstalled.

원문: Fluke Calibration 5790B 설명서 · 제조사 원문 자료입니다. 사양은 제조사 사정에 따라 변경될 수 있습니다.

we measure, we calibrate, we validate.
㈜테솔 · www.tessol.com TS-TL-FLK-051 108 / 172
KOLAS 국제공인교정기관 · ISO/IEC 17025

TS-TL-FLK-051

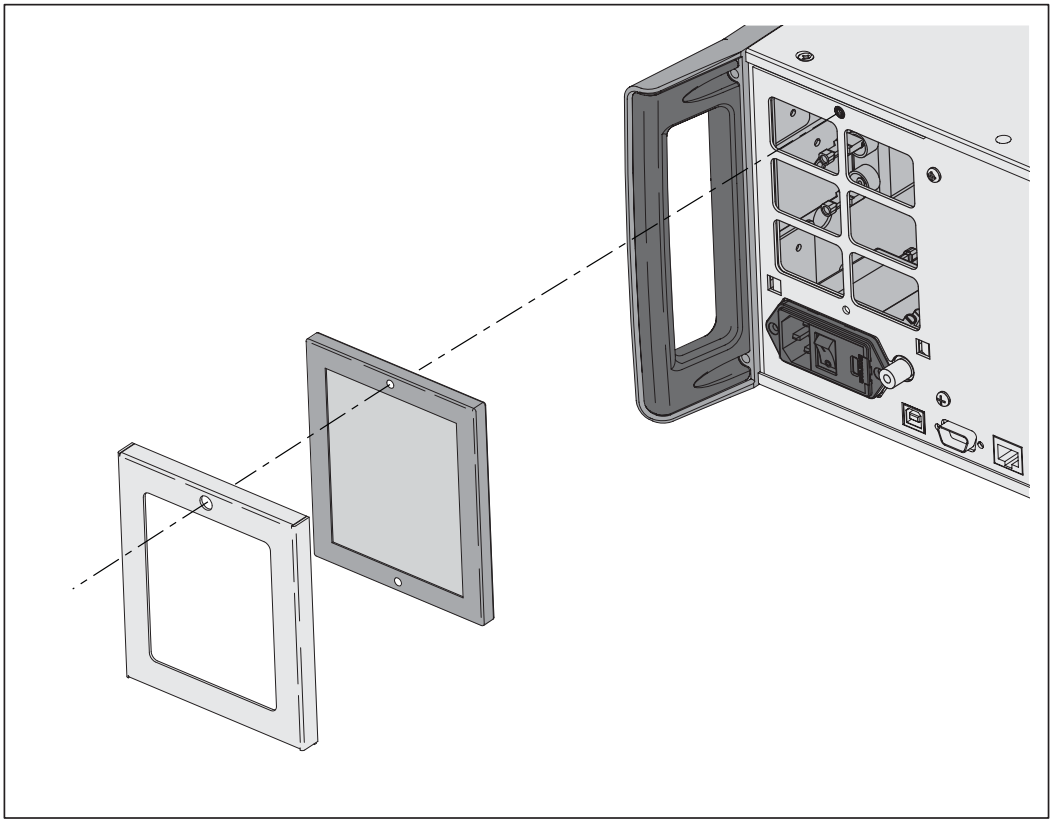

Figure 4-3. Air Filter Access

원문: Fluke Calibration 5790B 설명서 · 제조사 원문 자료입니다. 사양은 제조사 사정에 따라 변경될 수 있습니다.

Access Procedures

Top and Bottom Covers

Check that power is not connected to Product; the power control must be off, and the line power cord must be disconnected. Top and bottom covers are secured with eight Phillips head screws (four front, four rear).

Digital Section Cover

The Digital Section is accessed through one top cover that is secured by six Phillips head screws (five on top and one on side).

Analog Section Covers

The Analog Section is enclosed with separate covers on top and bottom. The top cover is secured with nine Phillips head screws. The bottom Analog Section cover is secured with eight Phillips head screws (three short, five longer).

Rear Panel Removal and Installation

Once the top and bottom covers are removed:

1. Remove the six hex-head screws (three on each rear handle side).
2. Remove the two Phillips-head screws found along the side of the fan assembly.
3. Remove the two hexagonal jack screws next to the RS-232 connector.
4. Remove the two hexagonal jack screws next to the GPIB connector.
5. Carefully pull the rear panel housing from the rear panel.
6. Remove nut, star washer, and green/yellow wire from inside rear panel.
7. Remove spade lug connections form line filter on inside of rear panel.

Reverse this procedure to install the Rear Panel assembly.

원문: Fluke Calibration 5790B 설명서 · 제조사 원문 자료입니다. 사양은 제조사 사정에 따라 변경될 수 있습니다.

Front Panel Removal and Installation

To remove the front panel:

1. Remove the top and bottom covers.
2. Remove the two screws at the top of the front panel and the six hex screws on the front handles and gently pull the front panel away from the mainframe. Position the front panel on its handles in front of the instrument.
3. If you need to detach the front panel from the Product, all cables must be disconnected as follows:
   a. Remove the analog cover.
   b. Remove the A6 wideband board if present.
   c. Remove the A10 board.
   d. Remove the two screws that attach the input paddle board to the analog motherboard.
   e. Detach the green/yellow wire from analog motherboard.

   The front panel is now free from the Product.

   Reverse this procedure to install the Front Panel.

Display Assembly Removal and Installation

Once the front panel has been removed:

1. Remove one end of the white cable that is connected between the A2 board and display assembly.
2. Remove the nine screws from the metal cover.
3. Flip the metal cover to one side to access display.
4. Detach the three cables that connect the display to the A2 front panel board.
5. Gently lift Display unit out.

Reverse this procedure to install the front panel.

Keyboard Assembly Removal and Installation

Once the display assembly has been removed:

1. Remove the self-tapping screw from the A2 board.
2. Remove the three screws from the A9 bottom edge.
3. Remove the A9 Board.
4. Remove the keyboard pad from assembly.

Reverse this procedure to install the Front Panel.

Analog Assembly Removal and Installation

Once the Product and analog section top covers have been removed, remove the analog assemblies by pulling straight up at the top corners of each assembly. Note that each module cannot be positioned in any other slot and that identifying information on the tab for each module faces forward. In all cases, the component side of each module also faces toward the front panel.

원문: Fluke Calibration 5790B 설명서 · 제조사 원문 자료입니다. 사양은 제조사 사정에 따라 변경될 수 있습니다.

TS-TL-FLK-051

we measure, we calibrate, we validate.
㈜테솔 · www.tessol.com TS-TL-FLK-051 111 / 172
KOLAS 국제공인교정기관 · ISO/IEC 17025

A20 CPU Assembly Removal and Installation

Once the Product and digital section top covers have been removed, remove the CPU by pulling straight up at the top corners of the assembly. In relation to the chassis side, the CPU assembly components face toward, and the digital power supply assembly components face away.

Power Transformer Removal and Installation

1. Remove the Product top and bottom covers. See *Top and Bottom Covers*.
2. Remove the rear panel. See *Rear Panel Removal and Installation*.
3. Remove the digital section cover. See *Digital Section Cover*.
4. Remove the A20 CPU board.
5. Disconnect the six transformer/fan cable bundles from the A4 digital motherboard.
6. Follow steps 1 and 2 of *Front Panel Removal and Installation* procedure to remove the front panel. The front panel can remain connected and positioned on its handles in front of the Product.
7. Remove the two screws from the front bulk head that fasten to the black transformer/fan support.
8. Remove the three screws from the bottom of the Product that are accessible through the holes in the A4 digital motherboard.
9. Remove the four screws from the black transformer/fan support from the top of the Product.
10. Lift the power transformer/fan assembly out of Product.

Reverse this procedure to install the transformer.

Fan Removal and Installation

The Product fans may be removed and installed without removing the power transformer/fan:

1. Remove the top and bottom covers. See *Top and Bottom Covers*.
2. Remove the digital section cover. See *Digital Section Cover*.
3. Disconnect the fan cable from the A4 digital motherboard.
4. Remove the four screws from the fan. Access to the fan screws is through holes from side of Product.

원문: Fluke Calibration 5790B 설명서 · 제조사 원문 자료입니다. 사양은 제조사 사정에 따라 변경될 수 있습니다.

we measure, we calibrate, we validate.
㈜테솔 · www.tessol.com TS-TL-FLK-051 112 / 172
KOLAS 국제공인교정기관 · ISO/IEC 17025

TS-TL-FLK-051

Error Codes

The Product error codes are listed below.

0-Level Faults: Error handling	
0	No Error
1	Error Queue Overflow
2	Bad ERR Channel

100-Level Faults: Self-calibration	
100	Invalid Procedure Number
101	No Such Step In Procedure
102	No Cal/Diag Procedure Underway
103	Cal/Diag not Halted
104	No Cal Step To Which To Back Up
105	No Such Position For Range Under Cal
106	No Such Range For Cal Procedure
107	DAC %s Calibration Failed
108	Entered Reference Outside Of Limits
109	Measured And Entered Input Don't Match
110	Frequency Doesn't Match Expected
111	Input Is Of Wrong Polarity
112	Input Is Changing During Cal
113	Input Tripped Protection Circuit
114	Constant %s Out Of Limits
115	Flatness Constant Out Of Limits
116	Range Gain Constant Out Of Limits
117	Rough Gain Constant Out Of Limits
118	Offset Constant Out Of Limits
119	Low F AC Constant Out Of Limits
120	%s Range Zero Out Of Limits
121	%s Range Shunt Offset Out Of Limits
122	Divide By 0 %s IA Update
123	Old %s IA Is Way Off! Do A DC Cal
124	Temperature Gain Is Zero!
125	New Temperature Zero Out Of Limits
126	Cal State Must Be Unsecured and in Service Mode

원문: Fluke Calibration 5790B 설명서 · 제조사 원문 자료입니다. 사양은 제조사 사정에 따라 변경될 수 있습니다.

127	INPUT2 Correction Factor Out Of Limits
128	Calibration Step In Progress
129	Must Do Wideband Reference Correction First
130	Cable Calibration Failed
150	Calibration Procedure Complete
199	Cal Error Occurred; Already Reported

200-Level Faults: Hardware configuration	
200	Need A %s To Do That
201	Need Wideband AC Option To Do That
202	IG Software Out Of Date: Use %s Or Newer

300-Level Faults: Inguard processor	
300	A17 Guardcrossing: ROM Checksum
301	A17 Guardcrossing: RAM
302	A17 Guardcrossing: DUART
303	A17 Guardcrossing: Watchdog
304	Hardware Initialization

400-Level Faults: Self-diagnostics	
400	%s
401	A16 DAC: Channel Ratio
402	%s
403	A15 A/D: Selftest
404	A15 A/D: %s Zero
405	A15 A/D: Null DAC %s
406	A15 A/D: DAC %s
407	A15 A/D: Chopper %s
408	A10 Transfer: %s Range
409	A10 Transfer: %s Protection Check
410	A10 Transfer: Overload Check
411	A10 Transfer: Sensor Input/Output Match
412	A10 Transfer: %s Range Zero
413	A10 Transfer: %s Input Path
414	A10 Transfer: %s Frequency Measurement

원문: Fluke Calibration 5790B 설명서 · 제조사 원문 자료입니다. 사양은 제조사 사정에 따라 변경될 수 있습니다.

415	A6 Wideband: %s Range
416	A6 Wideband: Overload Check
417	A6 Wideband: %s Frequency Measurement
418	A3 Motherboard: KV Divider %s
419	A10 Transfer: Sensor Loop Settling
420	A6 Wideband: Sensor Loop Settling
421	A16 DAC: DAC Settling
422	A6 Wideband: Dormant Protection Check
423	A15 A/D: %s Linearity
450	Diagnostics Procedure Complete

500-Level Faults: Instrument state	
500	Bad Delta Unit
501	Invalid Range
503	Can't Set Ref
504	Can't Set Avg Ref
505	Can't Decode Learned String
506	Learned String Checksum Bad
507	Recalling Unsaved Instrument State
508	Already Printing A Report
509	External Guard Not Available
510	Display Brightness Setting Exceeds Limits

600-Level Faults: Firmware updater	
601	Backup directory not specified in AuxInfo
602	Backup filename not specified in AuxInfo
603	Destination directory not specified in AuxInfo
604	Destination filename not specified in AuxInfo
605	Error extracting required file transfer data from AuxInfo
606	Error retrieving parameter value from AuxInfo
607	Error retrieving section name from AuxInfo
608	Interim directory not specified in AuxInfo
609	Interim filename not specified in AuxInfo
610	Error reading AuxInfo file
611	Source directory on USB device not specified in AuxInfo

원문: Fluke Calibration 5790B 설명서 · 제조사 원문 자료입니다. 사양은 제조사 사정에 따라 변경될 수 있습니다.

612	Source filename on USB device not specified in AuxInfo
613	Can not build a list of sequences to be executed
614	Backup directory not specified in AuxInfo (config/cal)
615	Backup file not specified in AuxInfo (config/cal)
616	Destination directory not specified in AuxInfo (config/cal)
617	Destination file not specified in AuxInfo (config/cal)
618	Source directory not specified in AuxInfo (config/cal)
619	Source file not specified in AuxInfo(config/cal)
620	Error setting mode of new file
621	Timestamp too long in AuxInfo
622	Can not close updated file (config/cal)
623	Destination file does not exist (config/cal)
624	Can not get required AuxInfo parameters (config/cal)
625	Can not open new file (config/cal)
626	Failed to read the existing (destination) file (config/cal)
627	Failed to read the new (source) file (config/cal)
628	Can not remove existing backup file (config/cal)
629	Can not rename existing file to backup file (config/cal)
630	Source file does not exist (config/cal)
631	Invalid timestamp. Can not convert to epoch time
632	Kernel Datapath1 not specified in AuxInfo
633	Kernel Datapath2 not specified in AuxInfo
634	Kernel Device not specified in AuxInfo
635	Kernel Erase Command not specified in AuxInfo
636	Can not extract Kernel update data from AuxInfo
637	Kernel Offset not specified in AuxInfo
638	Kernel Read Command not specified in AuxInfo
639	Kernel Write Command not specified in AuxInfo
640	Kernel Device failed to close
641	Kernel Device failed to return info about device status
642	Kernel Device failed to open
643	Kernel Device failed to return status (error not used)
644	Unable to determine the size of the Kernel image file
645	Invalid offset in Kernel image section
646	Unable to extract command1 from AuxInfo for FrontPanel_Part3

원문: Fluke Calibration 5790B 설명서 · 제조사 원문 자료입니다. 사양은 제조사 사정에 따라 변경될 수 있습니다.

647	Unable to extract command2 from AuxInfo for FrontPanel_Part3
648	Error creating interim directory
649	MD5 hash of downloaded file does not agree with AuxInfo
650	Error mounting USB device
651	File to be downloaded does not exist on USB device
652	USB device not plugged in
653	Error deleting previous backup file
654	Error renaming installed file to backup
655	Error moving download file to destination directory
656	Remove file operation not specified in AuxInfo
657	Remove file operation failed
658	Error copying file from USB device to interim directory
659	File on USB device is older than installed file
660	File on USB device same as installed file (per timestamp)
661	Error unmounting USB device
662	Can not extract ver # from line 1 of src file (config/cal)
663	Can not extract ver # from line 1 of dest file (config/cal)
664	Kernel Datapath1 MD5 hash failed
665	Kernel Datapath2 (readback) MD5 hash failed
666	Unable to extract command JTAG from AuxInfo for MSP
667	Unable to unlock JTAG on MSP

700-Level Faults: Guard crossing communication	
700	Could not ACK packet from inguard
701	Illegal inguard receive task state
702	Bad receive packet num from inguard
703	Bad control byte from inguard
704	Multiple timeouts sending to inguard
705	Inguard request reset loop
706	Unexpected NSA from inguard
707	Bad packet num in ACK from inguard
708	Illegal inguard transmit task state
709	Inguard indefinite ACKWAIT holdoff
710	Packet too large for inguard

원문: Fluke Calibration 5790B 설명서 · 제조사 원문 자료입니다. 사양은 제조사 사정에 따라 변경될 수 있습니다.

800-Level Faults: Calibration constant	
800	Bad Cal Constant ID
801	Bad Cal Group ID
802	Save Operation Failed
803	Save Operation Complete

900-Level Faults: Normal measurement	
900	A/D Measurement Failed
901	Protection Activated
902	Inguard is overloaded
903	Ground Protection Activated -- Press Reset
904	DC Zero Cal Needed -- Go to Calibration in Setup Menu

1000-Level Faults: Non-volatile storage	
1001	Repaired missing or corrupted NV files
1002	Unknown NV constant

1100-Level Faults: Analog operations manager	
1100	Guard Crossing Protocol Failed To Start
1101	Analog Hardware Initialization Failed
1102	Giving Up On Initializing Hardware
1103	NV Integrity Check Failed
1104	Analog Hardware Control Inoperative

1200-Level Faults: GPIB interface	
1200	Error opening GPIB Controller
1201	Error setting GPIB Primary Address
1202	Error occurred reading characters from GPIB controller
1203	Error occurred sending characters to the GPIB controller
1204	GPIB DOS Error
1205	GPIB specified Interface Board is not Active Controller
1206	GPIB no present listening devices
1207	GPIB interface Board has not been addressed properly
1208	GPIB invalid argument
1209	GPIB specified Interface Board is not System Controller

원문: Fluke Calibration 5790B 설명서 · 제조사 원문 자료입니다. 사양은 제조사 사정에 따라 변경될 수 있습니다.

1210	GPIB I/O operation aborted (time-out)
1211	GPIB non-existent GPIB board
1212	GPIB routine not allowed during asynchronous I/O operation
1213	GPIB no capability for operation
1214	GPIB File system error
1215	GPIB command byte transfer error
1216	GPIB serial poll status byte lost
1217	GPIB SRQ stuck in ON position
1218	GPIB table problem

1300-Level Faults: Remote interfaces	
1300	Bad Syntax
1301	Unknown command
1302	Bad Parameter Count
1303	Bad Keyword
1304	Bad Parameter Type
1305	Bad Parameter Unit
1306	Bad Parameter Value
1307	488.2 I/O DEADLOCK
1308	488.2 INTERRUPTED Query
1309	488.2 UNTERMINATED Command
1310	488.2 Query After Indefinite Response
1311	Invalid From GPIB Interface
1312	Invalid From Serial Interface
1313	Unknown command
1314	Parameter Too Long
1315	Invalid Device Trigger
1316	*DDT Recursion
1317	Macro Calls Too Deep
1318	Remote Serial Port Dead
1320	Command Applies To Wideband Only
1321	Command Does Not Apply Wideband
1337	Already Executing a Procedure
1338	Already Writing to NV Memory
1339	MEAS? Timed-Out

원문: Fluke Calibration 5790B 설명서 · 제조사 원문 자료입니다. 사양은 제조사 사정에 따라 변경될 수 있습니다.

1360	Bad Binary Number
1361	Bad Binary Block
1362	Bad Character
1363	Bad Decimal Number
1364	Exponent magnitude too large
1365	Bad Hexadecimal Block
1366	Bad Hexadecimal Number
1368	Bad Octal Number
1369	Too Many Characters
1370	Bad String
1371	Report String Too Long
1372	Service Request (SRQ) String Too Long
1373	End-of-File String Too Long
1374	Serial Poll (SPL) String Too Long
1375	Trigger (GET) String Too Long
1380	File Operation Failed

1400-Level Faults: Report generation	
1400	Unknown Report Requested
1401	Unknown Report Device Requested
1402	Serial Port Timeout
1403	Could not find USB drive
1404	Could not open report file on USB drive

1500-Level Faults: Real time clock	
1500	Could not read time and date
1501	Could not set time and date
1502	Invalid date
1503	Invalid time

1600-Level Faults: Analog hardware control	
1601	Floating point math error
1602	Bad Reply Size From Inguard
1603	False MSG Semaphore from Inguard
1604	Inguard CPU A/D Error

원문: Fluke Calibration 5790B 설명서 · 제조사 원문 자료입니다. 사양은 제조사 사정에 따라 변경될 수 있습니다.

1605	Inguard CPU Timed Out On Main CPU
1606	Inguard CPU Command Error
1607	Timed Out Waiting For Inguard Reply
1608	Sequence Name Too Long
1609	Element Array Full
1610	Name Array Full
1611	Already Defining A Sequence
1612	Not Defining A Sequence
1613	Command Failed

1700-Level Faults: RS-232 serial interface	
1700	Bad virtual channel
1701	Framing/Parity/Overrun on chan %d
1702	Input queue overflow on chan %d
1705	Uart failed self Test
1707	Remote interface UART
1708	Remote interface USB
1709	Guard crossing UART
1710	Boost Crossing UART

1800-Level Faults: Ethernet	
1800	Port value out of range
1801	Could not open the ENET port
1802	Error reading from ENET port
1803	Ethernet address not valid
1804	Ethernet hostname not valid
1805	Ethernet hostname too long
1806	Can not get DHCP IP address
1807	Ethernet port 1
1808	Ethernet remote port
1809	Port value already in use
1810	Cannot change ethernet settings now

원문: Fluke Calibration 5790B 설명서 · 제조사 원문 자료입니다. 사양은 제조사 사정에 따라 변경될 수 있습니다.

1900-Level Faults: System	
1901	Can not modify file property
1902	Update execution error

2000-Level Faults: USB host	
2000	Failed to mount USB drive
2001	Failed to copy files

2100-Level Faults: Self-test

2200-Level Faults: Utilities	
2203	Cannot Set String. Cal Is Secured
2204	Passcode Must Be 1 to 8 Digits
2205	Cannot Store. Cal Is Secured
2206	Invalid Security Passcode
2207	Cannot Set Clock. Cal Is Secured
2208	Invalid command

2300-Level Faults: Software Timer	
2300	Cannot install MTtick()
2301	Bad timer selector

2400-Level Faults: USB flash drive

2500-Level Faults: Front panel	
2500	That variable was not recognized
2501	The GUI cannot set that variable
2502	That variable cannot be set to that value
2503	The set failed for other reasons

원문: Fluke Calibration 5790B 설명서 · 제조사 원문 자료입니다. 사양은 제조사 사정에 따라 변경될 수 있습니다.

Chapter 5
List of Replacable Parts

Introduction

This chapter contains an illustrated list of replacement parts for the 5790B. Parts are list by assembly; alphabetized by reference designator. Each assembly is accompanied by an illustration showing the location of each part and its reference designator. The parts lists give the following information:

- Reference designator
- An indication if the part is subject to damage by static discharge
- Description
- Fluke part number
- Total quantity
- Any special notes (for example, factory-selected part)

⚠Caution

A ϟ symbol indicates a device that may be damaged by static discharge.

How to Obtain Parts

Electrical components may be ordered from Fluke Calibration and its authorized representatives by using the part number under the heading Fluke Stock No. In the U.S., order directly from the Fluke Parts Department by calling 1-800-526-4731. Parts price information is available in a Fluke Calibration Replacement Parts Catalog which is available on request.

In the event that the part ordered has been replaced by a new or improved part, the replacement will be accompanied by an explanatory note and installation instructions, if necessary.

원문: Fluke Calibration 5790B 설명서 · 제조사 원문 자료입니다. 사양은 제조사 사정에 따라 변경될 수 있습니다.

To ensure prompt delivery of the correct part, include the following information when you place an order.

- Instrument model and serial number
- Part number and revision level of the pca containing the part.
- Reference designator
- Fluke stock number
- Description (as given under the Description heading)
- Quantity

Table 5-1. Final Assembly

Ref Des	Description	Part Number	Qty
1	5790B-4702,PCA, DISPLAY, A2	4628209	1
2	5790B-4703,PCA, ANALOG MOTHERBOARD, A3	4628211	1
3	5790B-4704,PCA, DIGITAL MOTHERBOARD, A4	4628227	1
4	5790B-4710,PCA, TRANSFER, A10	4628248	1
5	5790B-4715,PCA, A/D AMPLIFIER, A15	4628253	1
6	5790B-4716,PCA, DAC, A16	4628266	1
7	5790B-4717,PCA, REGULATOR/GUARD CROSSING, A17	4628275	1
8	5790B-4718,PCA, FILTER, A18	4628282	1
9	5790B-4720,PCA, MAIN CPU, A20	4628294	1
A6 Option	5790B-7606,PCA, WIDEBAND, A6, TESTED	4628230,	1
10	5790B-4722, PCA, N-CONNECTOR, A22	4465810	1
11	5790B-4723, ASSEMBLY, FRONT INPUT, A23	4545623	1
12	5790B-4725,PCA, TERMINAL INDICATOR, A25	4415087	1
13	5080A-8006,HANDLE, 4U	3468705	4
14	5790B-2008,FRONT PANEL PLASTIC	4411030	1
15	5790B-8002,INPUT DECAL, 5790B	4411009	1
16	5790B-2009,LED SPACER	4413773	1
17	5790B-8001,KEYPAD, 5790B	4410993	1
18	5730A-2703,DISPLAY ASSEMBLY	4304647	1
19	5790B-8003,MODEL DECAL, 5790B	4411011	1
20	5730A-8003,DECAL, USB	4219557	1
21	5790B-2501,SHEET METAL KIT, 5790B (See Kit Parts list)	4410979	1
22	5790B-4402,WIRE, INPUT 1	4414966	1
23	5790B-4403,ASSEMBLY, GROUND STRAP	4414982	1

원문: Fluke Calibration 5790B 설명서 · 제조사 원문 자료입니다. 사양은 제조사 사정에 따라 변경될 수 있습니다.

Ref Des	Description	Part Number	Qty
24	WASHER,WASHER,FLAT,STL,.191,.289,.010	111047	2
25	SCREW,6-32,.312,TRUSS,PHILLIPS,STAINLESS STEEL,PASSIVATED	335174	2
26	5790A-2021,WIDEBAND CONNECTOR	893193	1
27	SCREW,6-32,.375,PAN,PHILLIPS,STEEL,ZINC-CLEAR,LOCK	152165	2
28	5725A-2703-11,BINDING POST-RED	886382	2
29	5725A-2703-15,BINDING POST-BLACK	886379	1
30	5725A-2703-14,BINDING POST-GREEN	886374	1
31	5725A-2703-13,BINDING POST-BLUE	886366	1
32	5725A-8019,NUT, LOW THERMAL, 8-32	850334	11
33	5700A-8058,WASHER, LOW THERMAL #8	859939	14
36	5790A-4405,4R01 BASE/CABLE	893321	1
37	5790A-8014,GASKET	885715	2
38	SCREW,8-32,.375,PAN,PHILLIPS,STEEL,ZINC-CLEAR,LOCK	114124	4
39	5700A-8020,WASHER, LOW THERMAL	760892	3
40	5730A-4201,TRANSFORMER/MODULE ASSY	4233875	1
42	POWER ENTRY MODULE,6A,250V,FILTER,FUSE,DPST SWITCH,FLANGE MT,.187TABS,SHIELDED	4355075	1
43	FILTER,LINE,3A/250V,CHASSIS MOUNT,.250 SPADE TERMINALS,64X34MM	4221500	1
44	SCREW,4-40,.375,FLAT,PHILLIPS,STAINLESS,PASSIVATE,LOCK (MUST BE ROHS COMPLIANT)	256024	2
45	5440A-8198-01,BINDING POST, STUD, PLATED	102707	1
46	WASHER,WASHER,LOCK,INTRNL,STL,.267ID	110817	1
47	NUT,NUT,HEX,BR,1/4-28	110619	1
48	5440A-8197-01,BINDING HEAD, PLATED	102889	1
49	5790B-2502,FAN & CONNECTOR ASSY	4586950	2
50	5700A-8021,FILTER, AIR	813493	1
51	5730A-2015,SIDE EXTRUSION	4222803	2
52	5730A-2016,INSERT EXTRUSION	4233853	2
53	6070A-2063,AIDE,PCB PULL	541730	3
54	WASHER,WASHER,FLAT,SS,.119,.187,.010	853296	2
55	WASHER,WASHER,FLAT,STL,.160,.281,.010	111005	4

원문: Fluke Calibration 5790B 설명서 · 제조사 원문 자료입니다. 사양은 제조사 사정에 따라 변경될 수 있습니다.

Ref Des	Description	Part Number	Qty
56	SCREW,8-32,.375,LO CAP,SCKT,STAINLESS STEEL,BLK OXIDE,LOCK	295105	20
57	SCREW,6-32,.375,PAN,PHILLIPS,STAINLESS STEEL,LOCK	334458	8
58	CONNECTOR ACCESSORY,D-SUB JACK SCREW,4-40,.250 L,W/FLAT WASHER	1777348	2
59	CONNECTOR ACCESSORY,MICRO-RIBBON,SCREW LOCK,M3.5,6-32,STEEL,ZINC-BLACK OR -CLEAR	854737	2
60	SCREW,6-32,.250,PAN,PHILLIPS,STEEL,ZINC-CLEAR,LOCK	152140	31
61	SCREW,SCREW,PH,P,LOCK,SS,6-32,.500	320051	13
62	SCREW,SCREW,PH,P,LOCK,SS,6-32,.750	376822	8
63	SCREW,6-32 X 0.25,FLAT HD UNDERCUT,PHILLIPS,HEAT TREATED,MAGNETIC SS,NYLON PATCH	320093	16
64	5730A-4406,CABLE, LVDS DISPLAY	4312028	1
65	5730A-4407,CABLE, DISPLAY BACKLIGHT	4312037	1
66	5730A-4408,CABLE, TOUCH CONTROLLER	4312043	1
67	5730A-8005,CLEAR STATIC CLING VINYL	4365799	1
68	NUT,NUT,EXT LOCK,STL,6-32	152819	2
69	SCREW,6-32,1.250,PAN,PHILLIPS,STEEL,ZINC-CLEAR,LOCK	159756	8
70	5730A-4401,INLET HARNESS	4308875	1
71	5730A-4402,INLET WIRE	4308882	1
72	5730A-4403,INLET WIRE	4308894	1
73	5730A-4404,GROUND WIRE	4308907	2
74	5730A-4405,GROUND WIRE	4308918	1
75	SCREW,4-14,.375,PAN,PHILLIPS,STEEL,ZINC-ROHS CLEAR,THREAD FORM	448456	6
77	FUSE,FUSE,.25X1.25,1.5A,250V,SLOW	109231	1
78	SPACER,SPACER,.250 RND,AL,.156ID,.250	153155	1
79	SCREW,4-40,.625,PAN,PHILLIPS,STEEL,ZINC-CLEAR,LOCK	145813	1
80	BUMPER,HI-TEMP SILICONE,.44 DIA,.188 THK,ADHESIVE	1601870	3
83	5790B-2012,LIGHT RING	4589532	2
85	5790B-2006,NUT PLATE	4421642	1

원문: Fluke Calibration 5790B 설명서 · 제조사 원문 자료입니다. 사양은 제조사 사정에 따라 변경될 수 있습니다.

Ref Des	Description	Part Number	Qty
86	ADAPTER,ADAPTER,COAX,N(F),N(M)	875443	1
88	5700A-2043-01 ,BOTTOM FOOT, MOLDED, GRAY #7	868786	4
89	SCREW,6-32 X 0.25,FLAT HD UNDERCUT,PHILLIPS,HEAT TREATED,MAGNETIC SS,NYLON PATCH	320093	8

Table 5-2. Sheet Metal Kit

Ref Des	Description	Part Number	Qty
116	5730A-2004,TOP COVER	4104376	1
117	5730A-2005,BOTTOM COVER	4104383	1
111	5790B-2013,FRAME, FILTER	4604458	1
110	5700A-2009,INSULATOR,DIGITAL MOTHERBOARD	761247	1
123	5790B-2004,FRONT PANEL SHEET METAL	4410954	1
112	5730A-2019, LCD MOUNT	4303920	1
118	5790B-2003,ANALOG TOP COVER	4410946	1
106	5700A-2013,INSULATOR, ANALOG BOTTOM	775361	1
119	5730A-2007,DIGITAL COVER	4104408	1
121	5790B-2701,RIVETED CHASSIS ASSY.	4413141	1
108	5700A-2056,SHIELD, HIGH VOLTAGE, REAR	791921	1
109	5790A-2011,COVER, ANALOG BOX, BOTTOM	874912	1
122	5790B-2001, SHIELD, A2 DISPLAY	4410922	1
105	5790B-2002,REAR PANEL	4410931	1

원문: Fluke Calibration 5790B 설명서 · 제조사 원문 자료입니다. 사양은 제조사 사정에 따라 변경될 수 있습니다.

5790B
Service Manual

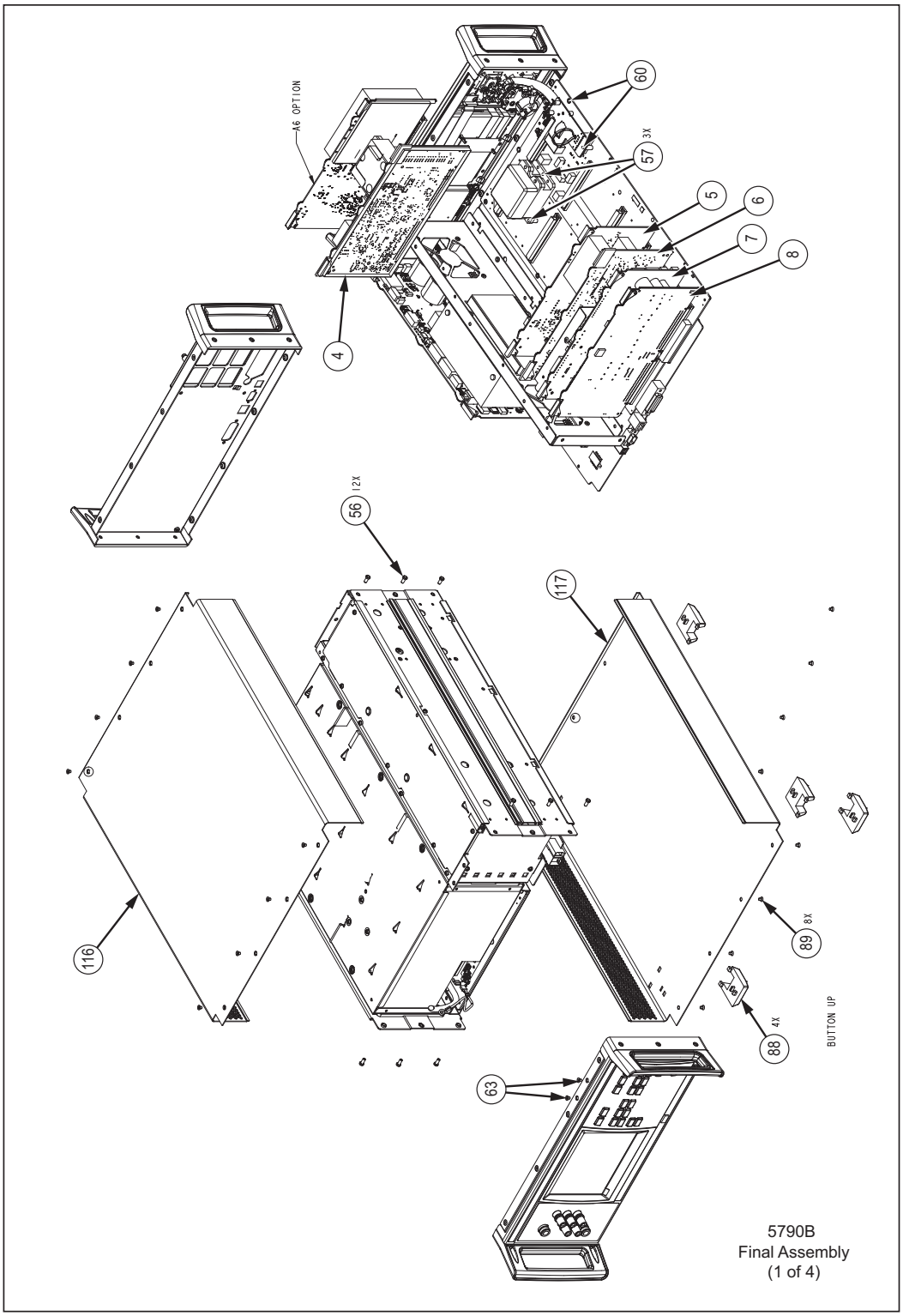

5790b_fa_1.eps

Figure 5-1. Final Assembly

원문: Fluke Calibration 5790B 설명서 · 제조사 원문 자료입니다. 사양은 제조사 사정에 따라 변경될 수 있습니다.

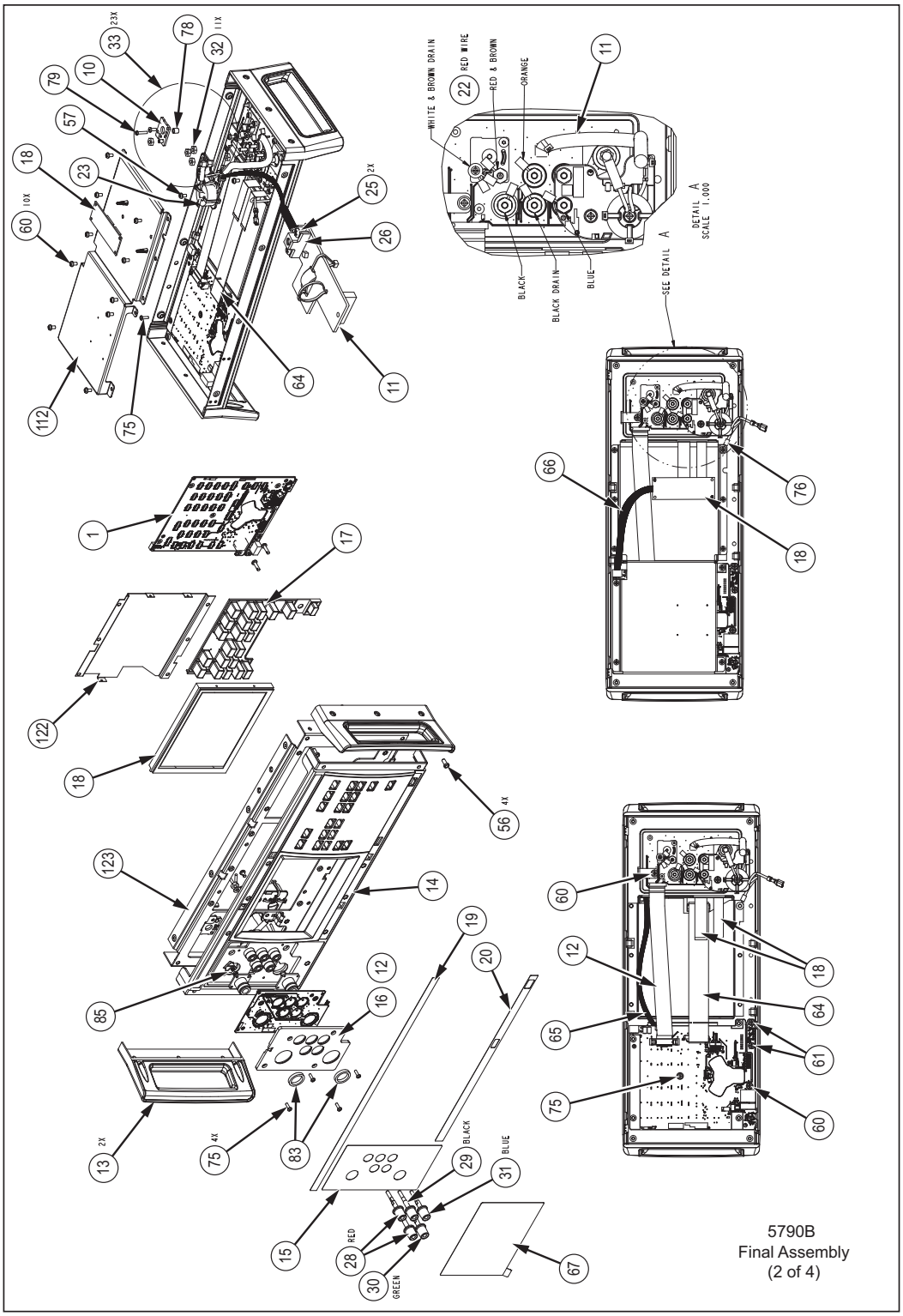

Figure 5-1. Final Assembly (Cont)

원문: Fluke Calibration 5790B 설명서 · 제조사 원문 자료입니다. 사양은 제조사 사정에 따라 변경될 수 있습니다.

5790B
Service Manual

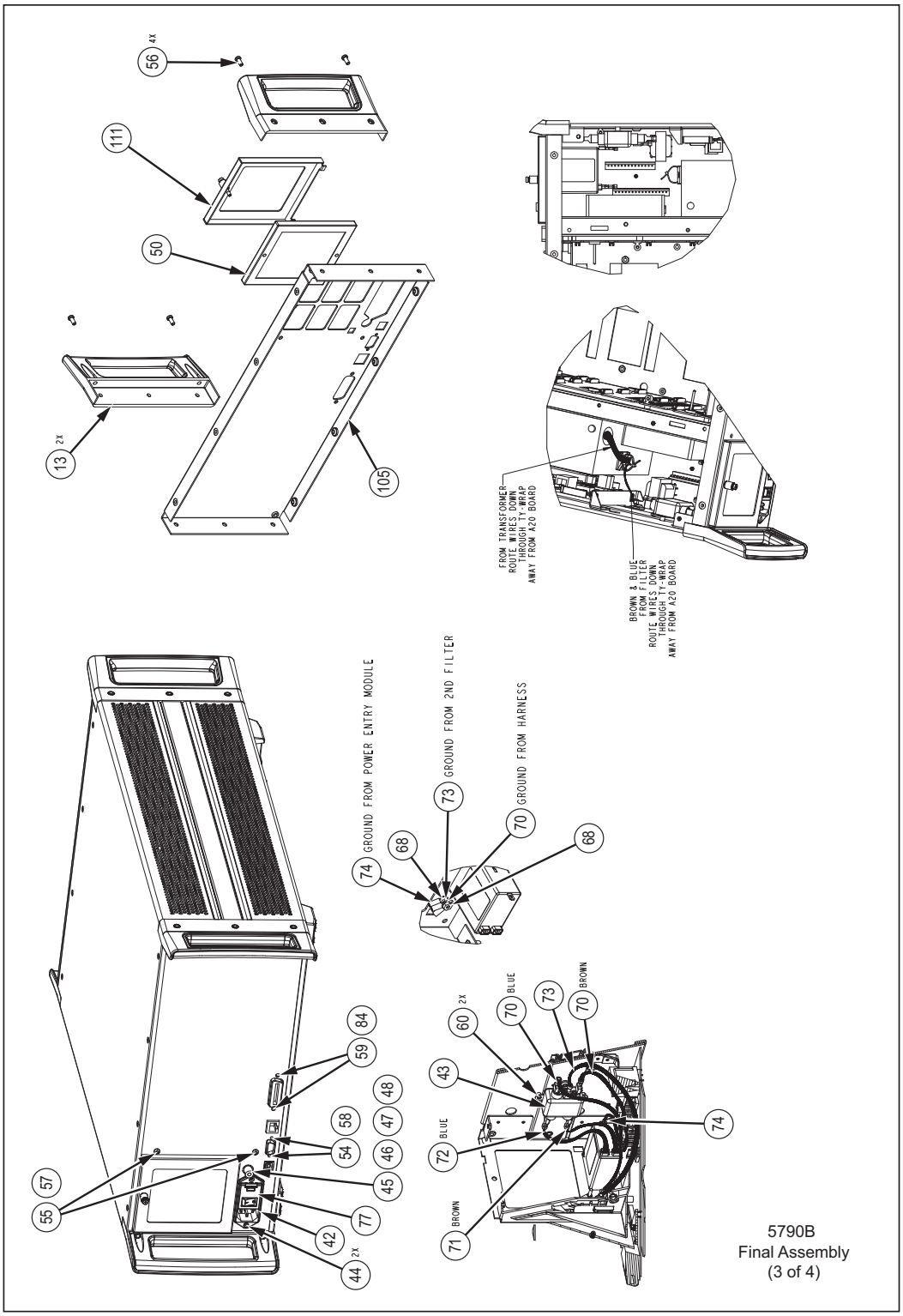

5790b_fa_3.eps

Figure 5-1. Final Assembly (Cont)

원문: Fluke Calibration 5790B 설명서 · 제조사 원문 자료입니다. 사양은 제조사 사정에 따라 변경될 수 있습니다.

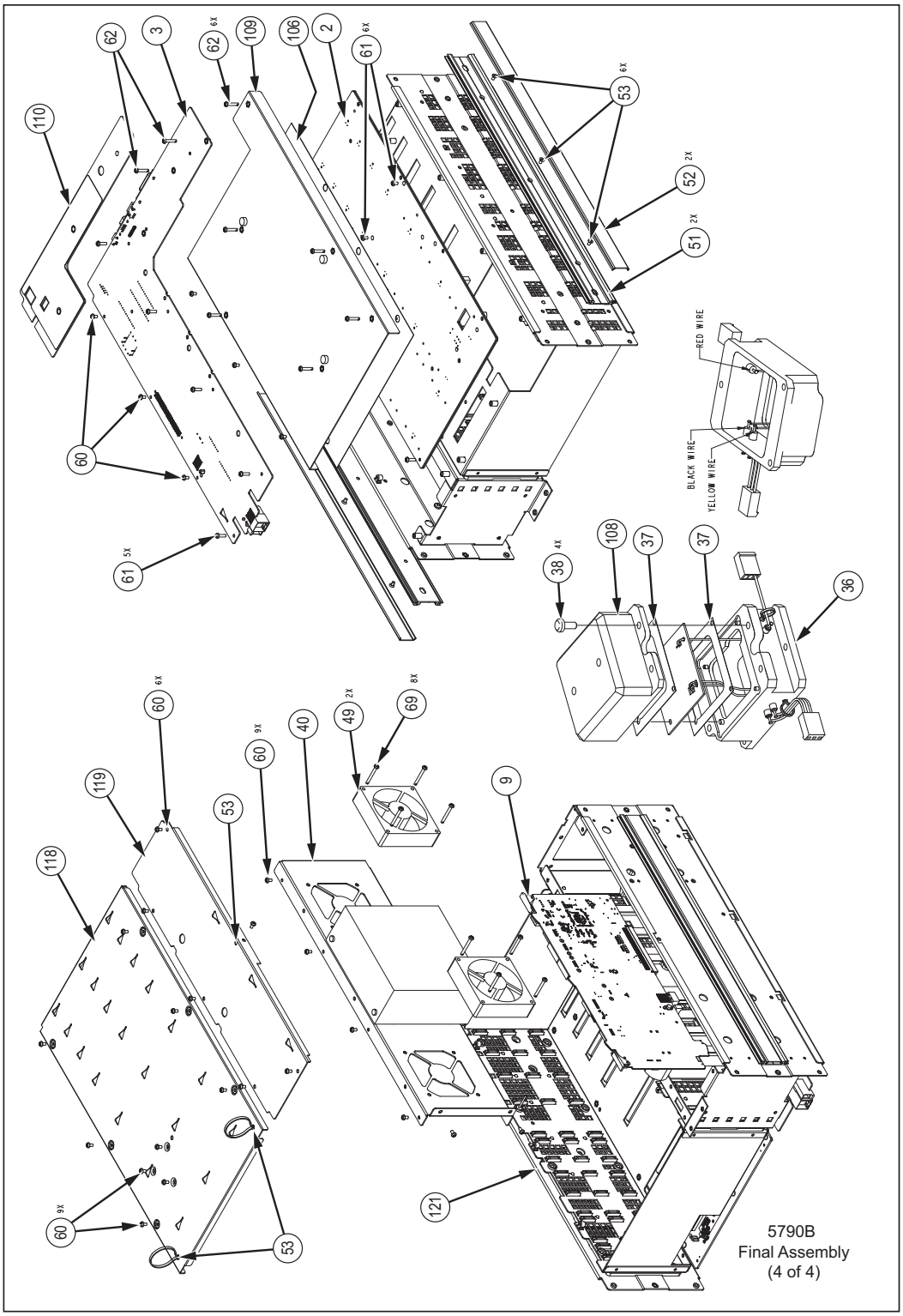

5790b_fa_4.eps

Figure 5-1. Final Assembly (Cont)

원문: Fluke Calibration 5790B 설명서 · 제조사 원문 자료입니다. 사양은 제조사 사정에 따라 변경될 수 있습니다.

원문: Fluke Calibration 5790B 설명서 · 제조사 원문 자료입니다. 사양은 제조사 사정에 따라 변경될 수 있습니다.

Appendices

Appendix	Title	Page
A	Glossary of AC-DC Transfer Related Terms	A-1
B	ASCII and IEEE – 488 Bus Codes	B-1
C	Calibration Constant Information	C-1

원문: Fluke Calibration 5790B 설명서 · 제조사 원문 자료입니다. 사양은 제조사 사정에 따라 변경될 수 있습니다.

5790B
Service Manual

원문: Fluke Calibration 5790B 설명서 · 제조사 원문 자료입니다. 사양은 제조사 사정에 따라 변경될 수 있습니다.

Appendix A
Glossary of AC-DC Transfer Related Terms

Absolute Uncertainty

Uncertainty that includes contributions from all sources, for example, traceability to national standards of the standards used, plus the uncertainty of the measurement process. Absolute uncertainty should be used to compute test uncertainty ratio. Also see “relative uncertainty”.

Accuracy

The degree to which the measured value of a quantity agrees with the accepted, consensus, or true value of that quantity. Accuracy is the same as 1 - % uncertainty. For example, an instrument specified to ±1 % uncertainty is 99 % accurate. Also see “uncertainty”.

Artifact Calibration

An instrument calibration technique that uses a calibration system within the instrument to reduce the number of required external standards to a small number of artifact standards. The Fluke 5730A Calibrator uses Artifact Calibration.

Artifact Standard

A stable object that produces or embodies a physical quantity for use as a reference standard. An artifact standard may have an assigned traceable value when used for calibration purposes. Fluke 732A DC Voltage Reference Standard and the Fluke 742A Series Standard Resistors are examples. Also see “transfer standard”.

AC-DC Absolute Uncertainty

Includes all known error sources contributing to the uncertainty of an AC-DC difference correction. This includes NIST (National Institute of Standards and Technology) uncertainties, transfer uncertainty from a primary standard to working standard, and internal error contributions (both random and temperature related).

원문: Fluke Calibration 5790B 설명서 · 제조사 원문 자료입니다. 사양은 제조사 사정에 따라 변경될 수 있습니다.

AC-DC Transfer

The process of comparing an AC voltage to a known DC voltage, thereby transferring the low uncertainty of the DC voltage to the AC voltage. The 792A can be used to perform two different types of AC-DC transfers:

1. An AC measurement
2. An AC-DC difference measurement

In a measurement, the transfer standard is used to determine absolute RMS voltage level. In an AC-DC difference measurement, the transfer standard is a reference that tests the and DC response of another transfer standard. The goal of a measurement is to determine the error of the source or voltmeter under test. The goal of an AC-DC difference measurement is a value called the “AC-DC difference”, which is positive when more voltage than DC voltage is required to produce the same output in the transfer standard under test.

AC-DC Difference

A measurement of an AC-DC transfer device's accuracy. The AC-DC difference is a transfer device's error when it compares a DC voltage to the same RMS voltage. A positive AC-DC difference indicates that more alternating than direct voltage is required to produce the same reading.

Base Units

Units in the SI system that are dimensionally independent. All other units are derived from base units. The only base unit in electricity is the ampere.

Buffer

1. An area of digital memory for temporary storage of data.
2. An additional amplifier stage to reduce output impedance levels.

Burden Voltage

The maximum sustainable voltage across the terminals of a load.

Calibration

The comparison of a measurement system or device of unknown accuracy to a measurement system or device of known and greater accuracy to detect or correct any variation from required performance of the unverified measurement system or device. Also see “verification” and “traceability”.

Calibration Constant

A coefficient that is applied manually or automatically to adjust the output or reading of an instrument.

Calibration Curve

A smooth curve drawn through a graph of calibration points.

Calibration Interval

The interval after which calibration must occur to maintain the performance of an instrument as stated in its specifications.

원문: Fluke Calibration 5790B 설명서 · 제조사 원문 자료입니다. 사양은 제조사 사정에 따라 변경될 수 있습니다.

TS-TL-FLK-051

we measure, we calibrate, we validate.
㈜테솔 · www.tessol.com TS-TL-FLK-051 136 / 172
KOLAS 국제공인교정기관 · ISO/IEC 17025

Calibration Report

A record of shifts or calibration constant changes that have occurred during calibration.

Calibrator

A device that supplies outputs with a known uncertainty for use in testing the accuracy of measurement devices or other sources.

Characterization

A calibration process that produces a calibration constant or known error for use in correcting the output or reading of an instrument or standard.

Common Mode Noise

An undesired signal that exists between a device's terminals and ground. Common mode noise is at the same potential on both terminals of a device. Also see “normal mode noise”.

Compliance Voltage

The maximum voltage that a constant-current source can supply.

Confidence Level

A percentage indicating certainty or assurance that an associated condition is true.

Control Chart

A chart devised to monitor one or more processes in order to detect the excessive deviation from a desired value of a component or process.

Crest Factor

The ratio of the peak voltage to the RMS voltage of a waveform (with the DC component removed). Also see RMS.

DAC (Digital-to-Analog Converter)

A device or circuit that converts a digital waveform to an analog voltage.

Derived Units

Units in the SI system that are derived from base units. Volts, ohms, and watts are derived from amperes and other base and derived units.

Distribution Function

The expression of a relationship between the values and the corresponding frequencies of a variable.

Drift

Gradual change in a value over time.

Error

Deviation from correct value. The different types of error defined in this glossary are floor, gain, offset, linearity, random, scale, systematic, transfer, and zero.

Flatness

A measure of output level variation for a voltage source as frequency is varied. Flatness limits are normally specified as a ratio (%) to nominal output level at a reference frequency.

Floor Error

A contribution to measurement or source uncertainty that is independent of reading or output setting. In uncertainty specifications, floor error is often combined with fixed range errors and expressed in units such as microvolts or counts of the least significant digit. Also see “error”.

Full Scale

The upper limit of measurement or source value for which a given uncertainty specification applies, including any “overrange”. Also see “overrange” and “range”.

Gain Error

Same as scale error. An example of scale or gain error is, when the slope of a calibrator's displayed output vs. its true output is not exactly 1. A calibrator with only gain error (no offset or linearity error), will read 0 V with 0 V on the display, but something other than 10 V with 10 V on the display.

Ground

The voltage reference point in a circuit. Earth ground is a connection through a ground rod or other conductor to the earth, usually accessible through the ground conductor in a power receptacle.

Ground Loop

Undesirable current induced when there is more than one chassis ground potential in a system of instruments. Ground Loops can be minimized by connecting all instruments in a system to ground at one point.

Guard

A floating shield around sensitive circuitry inside an instrument. The guard provides a low-impedance path to ground for common-mode noise and ground currents, thereby eliminating errors introduced by such interference.

International System of Units

Same as “SI System of Units”; the accepted system of units. See also “units”, “base units”, and “derived units”.

Legal Units

The highest echelon in a system of units, for example the 1990 SI volt.

원문: Fluke Calibration 5790B 설명서 · 제조사 원문 자료입니다. 사양은 제조사 사정에 따라 변경될 수 있습니다.

Life-Cycle Cost

The consideration of all elements contributing to the cost of an instrument throughout its useful life. This includes initial purchase cost, service and maintenance cost, and the cost of support equipment.

Linearity

The relationship between two quantities when a change in the first quantity is directly proportional to a change in the second quantity.

Linearity Error

Linearity Error occurs when the true output vs. selected output response curve of a calibrator is not exactly a straight line. You can measure this type of error by plotting the response curve, then measuring how far the curve deviates from the straight line at various points.

MAP (Measurement Assurance Program)

A program for a measurement process. A MAP provides information to demonstrate that the total uncertainty of the measurements (data), including both random error and systematic components of error relative to national or other designated standards is quantified, and sufficiently small to meet requirements.

Maximum Transfer Time

Maximum time that an AC-DC transfer can be made to stay within the stated AC-DC absolute uncertainty.

Metrology

The science of, and the field of knowledge concerned with measurement.

Minimum V(Sub)in

For each range of an AC/DC transfer standard, the minimum input RMS voltage for which uncertainty specifications apply. Also see RMS.

Minimum Use Specifications

Specifications computed to satisfy the calibration requirements of measurement or source device (UUT). Usually determined by a specified test uncertainty ratio between the absolute uncertainties of the UUT and its required calibration equipment. Also see Test Uncertainty Ratio.

Noise

An undesirable signal that is superimposed on a desired or expected signal. See “normal mode noise” and “common mode noise”.

Noise Floor

For an AC-DC transfer standard, the transfer uncertainty due to noise factors.

Nonvolatile Memory

An electronic memory that retains its contents when the power is turned off.

Normal Mode Noise

An undesired signal that appears between the terminals of a device.

Offset Error

Same as zero error. The reading shown on a meter when an input value of zero is applied is its offset or zero error.

Parameters

Independent variables in a measurement process such as temperature, humidity, test lead resistance, etc.

Precision

The degree of agreement among independent measurements of a quantity under specified conditions. The precision of a measurement process is its coherence or repeatability. Note that while precision is necessary for accuracy, it does not imply it.

Predictability

A measure of what is known of the time-behavior of a device. A documented drift rate with understood characteristics (e.g., linear, exponential) can be highly predictable.

Primary Standard

A standard defined and maintained by some authority and used to calibrate all other secondary standards.

Process Metrology

Tracking the accuracy drift of calibration and other equipment by applying statistical analysis to correction factors obtained during calibration.

Random Error

Any error which varies in an unpredictable manner in absolute value and in sign when measurements of the same value of a quantity are made under effectively identical conditions.

Range

Stated upper limits of measurement or source values for which given uncertainty specifications apply. Also see “overrange” and “scale”.

Reference Standard

The highest-echelon standard in a laboratory; the standard that is used to maintain working standards that are used in routine calibration and comparison procedures.

Relative Uncertainty

Uncertainty specifications that are relative to a reference value, and not traceable to national standards. Also see “absolute uncertainty”.

원문: Fluke Calibration 5790B 설명서 · 제조사 원문 자료입니다. 사양은 제조사 사정에 따라 변경될 수 있습니다.

Reliability

A measure of the probability of failure of an instrument.

Repeatability

See “precision”.

Resistance

A property of a conductor that determines the amount of current that will flow when a given amount of voltage exists across the conductor. Resistance is measured in ohms. One ohm is the resistance through which one volt of the potential will cause one ampere of current to flow.

Resolution

The smallest change in quantity that can be detected by a measurement system or device. For a given parameter, resolution is the smallest increment that can be measured, generated or displayed.

Reversal Error

Also called turnover error, the difference in output of an AC-DC transfer standard for the same DC input but with polarity reversed. The output logged for the DC reference should be the average of the two readings.

RF (Radio Frequency)

The frequency range of radio waves; from 150 kHz up to the infrared range.

RMS (Root-Mean-Square)

The value assigned to a voltage or current that results in the same power dissipation in a resistance as a DC current or voltage of the same value.

RMS Sensor

A device that generates a DC output signal proportional to the RMS value of the input signal. RMS sensors operate by measuring the heat generated by a voltage through a known resistance (for example, power); therefore, they sense true RMS voltage. RMS sensors are used to make AC-DC difference measurements.

Scale

The absolute span of the reading range of a measurement device including overrange capability.

Scale Error

See “gain error”.

Secondary Standard

A standard maintained by comparison against a primary standard.

원문: Fluke Calibration 5790B 설명서 · 제조사 원문 자료입니다. 사양은 제조사 사정에 따라 변경될 수 있습니다.

Sensitivity

The degree of response of a measuring device to the change in input quantity, or a figure of merit that expresses the ability of a measurement system or device to respond to an input quantity.

Settling Time

The time taken for a measurement device's reading to stabilize after a voltage is applied to the input.

Shield

A grounded covering device designed to protect a circuit or cable from electromagnetic interference. Also see “guard”.

SI System of Units

The accepted International System of Units. See also “units”, “base units”, and “derived units”.

Specifications

A precise statement of the performance of a measurement or stimulus device.

Square Law

Defines the response of a device whose output is proportional to the square of the applied stimulus. Thermocouple-type transfer devices have a square-law response.

Stability

A measure of the freedom from drift relative to a reference value, over time and over changes in other variables such as temperature. Note that stability is not the same as uncertainty.

Standard

A device that is used as an ext value for reference and comparison.

Standard Cell

A primary cell that serves as a standard of voltage. The term “standard cell” often refers to a “Weston normal cell”, which is a wet cell with a mercury anode, a cadmium mercury amalgam cathode, and a cadmium sulfate solution as the electrolyte.

Systematic Error

Any error that remains constant or varies in a predictable manner as successive measurements of the same quantity are made under effectively identical conditions. Note that a known systematic error can be compensated for with a correction, whereas, a random error cannot. Also see “random error”.

Temperature Coefficient

A factor used to calculate the change in indication or output of an instrument as a result of changes in temperature. Changes in temperature contribute to instrument uncertainty by an amount determined by the temperature coefficient.

원문: Fluke Calibration 5790B 설명서 · 제조사 원문 자료입니다. 사양은 제조사 사정에 따라 변경될 수 있습니다.

Test Uncertainty Ratio

The numerical ratio of the uncertainty of the measurement system or device being calibrated or verified, and the uncertainty of the measurement system or reference device.

Thermal EMF

The voltage generated when two dissimilar metals joined together are heated.

Traceability

The ability to relate individual measurement results to legally defined national standards through an unbroken chain of comparisons. Traceability requires evidence produced on a continuing basis, such as calibration records, that the measurement process is producing results for which the total measurement uncertainty relative to national standards is quantified.

Transfer

See “AC-DC transfer”.

Transfer Error

Error induced by the process of comparing one standard or instrument with another. This does not include the uncertainty of the transfer standard.

Transfer Stability

Change in the AC-DC Difference correction over time, with stated conditions.

Transfer Standard

Any standard used to compare one measurement or source device with another. Note that a transfer standard needs only to be stable for the duration of the transfer. It does not need an assigned value.

Transport Standard

A transfer standard that is rugged enough to allow the shipment by common carrier to another location.

True Value

Also called a legal value, the accepted consensus, for example, the correct value of the quantity being measured.

Uncertainty

The range of values, usually centered on the indicated or requested value, within which the true, accepted, or consensus value is expected to lie within stated probability or confidence. Fluke uses 99.7 % (3σ) confidence limits. Uncertainty is a quantification of accuracy.

Units

Symbols or names that define the measured quantities. Examples of units are: V, mV, A, kW, and dBm. See also “SI System of Units”.

원문: Fluke Calibration 5790B 설명서 · 제조사 원문 자료입니다. 사양은 제조사 사정에 따라 변경될 수 있습니다.

UUT (Unit Under Test)

An abbreviated name for an instrument that is being tested or calibrated.

Volt

The unit of emf (electromotive force) or electrical potential in the SI system of units. One volt is the difference of electrical potential between two points on a conductor carrying one ampere of current, when the power being dissipated between these two points is equal to one watt.

The unit of power in the SI system of units. One watt is the power required to do work at the rate of one joule/second. In terms of volts and ohms, one watt is the power dissipated by one ampere flowing through a one-ohm load.

In instrumentation, wideband refers to the ability to measure or generate signals in the radio frequency spectrum.

Verification

The comparison of a measurement or source device (UUT) with a measurement or source device of known and lesser uncertainty, to report variation from required performance. Verification does not include adjustment or reassignment of values to UUT, and is often done to determine whether the adjustment is necessary. Also see “calibration”.

Working Standard

A standard that is used in routine calibration and comparison procedures in the laboratory, and is maintained by comparison to reference standards.

Zero Error

Same as offset error. The reading shown on a meter when an input value of zero is applied is its zero or offset error.

원문: Fluke Calibration 5790B 설명서 · 제조사 원문 자료입니다. 사양은 제조사 사정에 따라 변경될 수 있습니다.

Appendix B
ASCII and IEEE – 488 Bus Codes

ASCII Char.	Decimal	Octal	Hex	Binary 7654 3210	Dev. No.	Message ATN = True	
NUL	0	000	00	0000 0000			ADDRESSED COMMANDS
SOH	1	001	01	0000 0001		GTL	
STX	2	002	02	0000 0010			
ETX	3	003	03	0000 0011			
EOT	4	004	04	0000 0100		SDC	
ENQ	5	005	05	0000 0101		PPC	
ACK	6	006	06	0000 0110			
BELL	7	007	07	0000 0111			
BS	8	010	08	0000 1000		GET	
HT	9	011	09	0000 1001		TCT	
LF	10	012	0A	0000 1010			
VT	11	013	0B	0000 1011			
FF	12	014	0C	0000 1100			
CR	13	015	0D	0000 1101			
SO	14	016	0E	0000 1110			
SI	15	017	0F	0000 1111			

원문: Fluke Calibration 5790B 설명서 · 제조사 원문 자료입니다. 사양은 제조사 사정에 따라 변경될 수 있습니다.

ASCII Char.	Decimal	Octal	Hex	Binary 7654 3210	Dev. No.	Message ATN = True	
DLE	16	020	10	0001 0000			UNIVARSAL COMMANDS
DC1	17	021	11	0001 0001		LLO	
DC2	18	022	12	0001 0010			
DC3	19	023	13	0001 0011			
DC4	20	024	14	0001 0100		DCL	
NAK	21	025	15	0001 0101		PPU	
SYN	22	026	16	0001 0110			
ETB	23	027	17	0001 0111			
CAN	24	030	18	0001 1000		SPE	
EM	25	031	19	0001 1001		SPD	
SUB	26	032	1A	0001 1010			
ESC	27	033	1B	0001 1011			
FS	28	034	1C	0001 1100			
GS	29	035	1D	0001 1101			
RS	30	036	1E	0001 1110			
US	31	037	1F	0001 1111			
SPACE	32	040	20	0010 0000	0	MLA	LISTEN ADDRESSES
!	33	041	21	0010 0001	1	MLA	
‘’	34	042	22	0010 0010	2	MLA	
#	35	043	23	0010 0011	3	MLA	
S	36	044	24	0010 0100	4	MLA	
%	37	045	25	0010 0101	5	MLA	
&	38	046	26	0010 0110	6	MLA	
‘	39	047	27	0010 0111	7	MLA	
(	40	050	28	0010 1000	8	MLA	
)	41	051	29	0010 1001	9	MLA	
“	42	052	2A	0010 1010	10	MLA	
:-	43	053	2B	0010 1011	11	MLA	
`	44	054	2C	0010 1100	12	MLA	
-	45	055	2D	0010 1101	13	MLA	
.	46	056	2E	0010 1110	14	MLA	
/	47	057	2F	0010 1111	15	MLA	

원문: Fluke Calibration 5790B 설명서 · 제조사 원문 자료입니다. 사양은 제조사 사정에 따라 변경될 수 있습니다.

Appendices B
ASCII and IEEE – 488 Bus Codes

ASCII Char.	Decimal	Octal	Hex	Binary 7654 3210	Dev. No.	Message ATN = True	
0	48	060	30	0011 0000	16	MLA	
1	49	061	31	0011 0001	17	MLA	
2	50	062	32	0011 0010	18	MLA	
3	51	063	33	0011 0011	19	MLA	
4	52	064	34	0011 0100	20	MLA	
5	53	065	35	0011 0101	21	MLA	
6	54	066	36	0011 0110	22	MLA	
7	55	067	37	0011 0111	23	MLA	
8	56	070	38	0011 1000	24	MLA	
9	57	071	39	0011 1001	25	MLA	
:	58	072	3A	0011 1010	26	MLA	
:	59	073	3B	0011 1011	27	MLA	
<	60	074	3C	0011 1100	28	MLA	
=	61	075	3D	0011 1101	29	MLA	
>	62	076	3E	0011 1110	30	MLA	
?	63	077	3F	0011 1111		UNL	
@	64	100	40	0100 0000	0	MTA	TALK ADDRESSES
A	65	101	41	0100 0001	1	MTA	
B	66	102	42	0100 0010	2	MTA	
C	67	103	43	0100 0011	3	MTA	
D	68	104	44	0100 0100	4	MTA	
E	69	105	45	0100 0101	5	MTA	
F	70	106	46	0100 0110	6	MTA	
G	71	107	47	0100 0111	7	MTA	
H	72	110	48	0100 1000	8	MTA	
I	73	111	49	0100 1001	9	MTA	
J	74	112	4A	0100 1010	10	MTA	
K	75	113	4B	0100 1011	11	MTA	
L	76	114	4C	0100 1100	12	MTA	
M	77	115	4D	0100 1101	13	MTA	
N	78	116	4E	0100 1110	14	MTA	
O	79	117	4F	0100 1111	15	MTA	

원문: Fluke Calibration 5790B 설명서 · 제조사 원문 자료입니다. 사양은 제조사 사정에 따라 변경될 수 있습니다.

5790B
Service Manual

ASCII Char.	Decimal	Octal	Hex	Binary 7654 3210	Dev. No.	Message ATN = True	
P	80	120	50	0101 0000	16	MTA	
Q	81	121	51	0101 0001	17	MTA	
R	82	122	52	0101 0010	18	MTA	
S	83	123	53	0101 0011	19	MTA	
T	84	124	54	0101 0100	20	MTA	
U	85	125	55	0101 0101	21	MTA	
V	86	126	56	0101 0110	22	MTA	
W	87	127	57	0101 0111	23	MTA	
X	88	130	58	0101 1000	24	MTA	
Y	89	131	59	0101 1001	25	MTA	
Z	90	132	5A	0101 1010	26	MTA	
[	91	133	5B	0101 1011	27	MTA	
\	92	134	5C	0101 1100	28	MTA	
]	93	135	5D	0101 1101	29	MTA	
^	94	136	5E	0101 1110	30	MTA	
_	95	137	5F	0101 1111		UNT	
‘	96	140	60	0110 0000	0	MSA	SECONDARY ADDRESSES
a	97	141	61	0110 0001	1	MSA	
b	98	142	62	0110 0010	2	MSA	
c	99	143	63	0110 0011	3	MSA	
d	100	144	64	0110 0100	4	MSA	
e	101	145	65	0110 0101	5	MSA	
f	102	146	66	0110 0110	6	MSA	
g	103	147	67	0110 0111	7	MSA	
h	104	150	68	0110 1000	8	MSA	
i	105	151	69	0110 1001	9	MSA	
j	106	152	6A	0110 1010	10	MSA	
k	107	153	6B	0110 1011	11	MSA	
l	108	154	6C	0110 1100	12	MSA	
m	109	155	6D	0110 1101	13	MSA	
n	110	156	6E	0110 1110	14	MSA	
o	111	157	6F	0110 1111	15	MSA	

B-4

원문: Fluke Calibration 5790B 설명서 · 제조사 원문 자료입니다. 사양은 제조사 사정에 따라 변경될 수 있습니다.

ASCII Char.	Decimal	Octal	Hex	Binary 7654 3210	Dev. No.	Message ATN = True	
p	112	160	70	0111 0000	16	MSA	
q	113	161	71	0111 0001	17	MSA	
r	114	162	72	0111 0010	18	MSA	
s	115	163	73	0111 0011	19	MSA	
t	116	164	74	0111 0100	20	MSA	
u	117	165	75	0111 0101	21	MSA	
v	118	166	76	0111 0110	22	MSA	
w	119	167	77	0111 0111	23	MSA	
x	120	170	78	0111 1000	24	MSA	
y	121	171	79	0111 1001	25	MSA	
z	122	172	7A	0111 1010	26	MSA	
{	123	173	7B	0111 1011	27	MSA	
|	124	174	7C	0111 1100	28	MSA	
}	125	175	7D	0111 1101	29	MSA	
~	126	176	7E	0111 1110	30	MSA	
	127	177	7F	0111 1111			

원문: Fluke Calibration 5790B 설명서 · 제조사 원문 자료입니다. 사양은 제조사 사정에 따라 변경될 수 있습니다.

원문: Fluke Calibration 5790B 설명서 · 제조사 원문 자료입니다. 사양은 제조사 사정에 따라 변경될 수 있습니다.

Appendix C
Calibration Constant Information

The constants in these tables are arranged by group. Each group is stored as a block in nonvolatile memory. The value given for each constant in this list is the default assigned before the instrument is first calibrated. Defaults are reinstated if you perform a format of the EEPROM ALL or CAL areas.

Group ZC_BASIC

Name	Default	Function
DAC_Z1	398.0	DAC offset, coarse counts.
DAC_Z2	17500.0	DAC offset, fine counts.
DAC_RATIO	16500.0	DAC coarse/fine count ratio
AD_DIV_Z	0.0	A/D divided (1/6) range offset, in counts
AD_DIV_G	1.397E-8	A/D divided (1/6) range gain, V/count
AD_X1_Z	0.0	A/D x1 range offset, in counts
AD_X1_G	2.328E-9	A/D x1 range gain, V/count
AD_X10_Z	0.0	A/D x10 range offset, in counts
AD_X10_G	-2.328E-10	A/D x10 range gain, V/count
AD_SDL_Z	0.0	A/D SDL range offset, in counts
AD_SDL_G	2.328E-9	A/D SDL range gain, V/count
NULLDAC_Z	0.0	Null DAC offset, in volts
NULLDAC_G	6560.0	Null DAC gain, counts/V
SENSOR_C1	1.0	Sensor linearization
SENSOR_C2	0.0	Sensor linearization
OF_VSQ	0.0	V squared turnover coefficient
REF_CHECK	25.0E-6	A/D - DAC reference difference

원문: Fluke Calibration 5790B 설명서 · 제조사 원문 자료입니다. 사양은 제조사 사정에 따라 변경될 수 있습니다.

Group FREQ

Name	Default	Function
FREQ_G	1.0	Frequency counter "gain" (crystal error)

Group DC_DAC

Name	Default	Function
DAC_G	3017.0	DAC gain

Group WDC_SENSOR

Name	Default	Function
SENSOR_C1_WB	3.162277660e-03	(Autogenerated)
SENSOR_C2_WB	0.0	(Autogenerated)

Group AC_LINEARITY

Name	Default	Function
LN_C	.02	Coefficient of V^VEX*F^FEX
LN_LIM	100.0	Linearitization is done only below this frequency
LN_VHI	2.0	Higher measured amplitude points
LN_VLO	0.6	Lower point
LN_CCALC	484.0	Use to figure LN_C (Vfs * F) ^ 2

Group RIPPLE

Name	Default	Function
RIP_LF	0.24	Multiplier with slow bit set
RIP_HF	25.6	Multiplier with slow bit not set

원문: Fluke Calibration 5790B 설명서 · 제조사 원문 자료입니다. 사양은 제조사 사정에 따라 변경될 수 있습니다.

Group FACTORY

Name	Default	Function
WB_OHMS	50.0	True value of wideband input impedance
SHUNT_G	1.0	Correction for shunt measurements
SHUNT_A1	3.153719E-9	Freq (flatness) correction for SHUNT (vs INPUT1), 1st order
SHUNT_A2	3.072481E-14	Freq correction for SHUNT, 2nd
INPUT2_LO	150.0E-6	2nd order freq corr for INPUT2 (vs INPUT1), up to 2.2V range (@ 1 MHz)
INPUT2_MID	350.0E-6	7V - 220V ranges (@ 1 MHz)
INPUT2_HI	-17.0E-6	700V and 1000V ranges (@ 100 kHz)
DC_LIN	-9.0E-6	DC linearity fudge
L1_2_2MV	1222e-6	AC Linearity correction for 2.2 mv range
L1_7MV	100e-6	AC Linearity correction for 7 mv range
L1_22MV	-26e-6	AC Linearity correction for 22 mv range
L1_70MV	-32e-6	AC Linearity correction for 70 mv range
L1_220MV	0	AC Linearity correction for 220 mv range
L1_700MV	18.4e-6	AC Linearity correction for 700 mv range
L1_2_2V	11.5e-6	AC Linearity correction for 2.2 V range
L2_2_2V	104e-6	AC Linearity correction for 2.2 V range @ 300 kHz
L3_2_2V	209e-6	AC Linearity correction for 2.2 V range @ 500 kHz
L4_2_2V	225e-6	AC Linearity correction for 2.2 V range @ 1 MHz
L1_7V	6.1e-6	AC Linearity correction for 7 V range
L1_22V	8.1e-6	AC Linearity correction for 22 V range
L2_22V	20.7e-6	AC Linearity correction for 22 V range @ 50 kHz
L3_22V	55e-6	AC Linearity correction for 22 V range @ 100 kHz
L1_70V	6.6e-6	AC Linearity correction for 70 V range
L1_220V	8.3e-6	AC Linearity correction for 220 V range
L1_700V	0	AC Linearity correction for 700 V range
L1_1000V	0	AC Linearity correction for 1000 V range

원문: Fluke Calibration 5790B 설명서 · 제조사 원문 자료입니다. 사양은 제조사 사정에 따라 변경될 수 있습니다.

Group PERMANENT

Name	Default	Function
SLO_LIM	38.5	Slow/fast bit threshold
AC_LFCAL	1.0	Multiplies suggested ref value for lowest frequency
WBDC_FREQ	1000.0	Frequency at which DI and IA are calibrated for wideband
HF_LIMLO	102.0E+3	Point below which we switch back to low freq configuration
HF_LIMHI	105.0E+3	Point above which we switch to high freq configuration
MIN_FREQ	9.0	Below this point we consider the input to be DC
MAX_FREQ	1.21E+6	Highest frequency measure normally
MAX_WB_FREQ	52.01E+6	Highest frequency wide band measures
FAST_LIM	200.0	Above this we used fixed input and chopper diffential delay

Group WB_LINEARITY

Name	Default	Function
WBL_Y2	0.0	scaled error difference between 2.0V and 0.6V at 10 MHz
WBL_Y3	0.0	scaled error difference between 2.0V and 0.6V at 50 MHz

원문: Fluke Calibration 5790B 설명서 · 제조사 원문 자료입니다. 사양은 제조사 사정에 따라 변경될 수 있습니다.

Group WBCABLE

Name	Default	Function
WBCABLE_CORR	1.0	The one and only correction for the cable, at 50 MHz

Group DC_2_2MV

Name	Default	Function
DI_2_2MV	5000.0	2_2MV range DAC volts per input volt
OF_2_2MV	0.0	2_2MV range DC offset

Group ZC_2_2MV

Name	Default	Function
Z_2_2MV	0.0	2_2MV range zero
SHO_2_2MV	0.0	2_2MV AUX input offset
IA_2_2MV	0.001	2_2MV range A/D volts per input volt

Group AC_2_2MV

Name	Default	Function
F1_2_2MV	1.0	2_2MV range flatness correction 1 (10 Hz)
F2_2_2MV	1.0	2_2MV range flatness correction 2 (100 Hz)
F3_2_2MV	1.0	2_2MV range flatness correction 3 (1 kHz)
F4_2_2MV	1.0	2_2MV range flatness correction 4 (10 kHz)
F5_2_2MV	1.0	2_2MV range flatness correction 5 (20 kHz)
F6_2_2MV	1.0	2_2MV range flatness correction 6 (50 kHz)
F7_2_2MV	1.0	2_2MV range flatness correction 7 (100 kHz)
F8_2_2MV	1.0	2_2MV range flatness correction 8 (300 kHz)
F9_2_2MV	1.0	2_2MV range flatness correction 9 (500 kHz)
F10_2_2MV	1.0	2_2MV range flatness correction 10 (800 kHz)
F11_2_2MV	1.0	2_2MV range flatness correction 11 (1 MHz)

Group DC_7MV

Name	Default	Function
DI_7MV	1000.0	7MV range DAC volts per input volt
OF_7MV	0.0	7MV range DC offset

원문: Fluke Calibration 5790B 설명서 · 제조사 원문 자료입니다. 사양은 제조사 사정에 따라 변경될 수 있습니다.

Group ZC_7MV

Name	Default	Function
Z_7MV	0.0	7MV range zero
SHO_7MV	0.0	7MV AUX input offset
IA_7MV	0.00316228	7MV range A/D volts per input volt

Group AC_7MV

Name	Default	Function
F1_7MV	1.0	7MV range flatness correction 1 (10 Hz)
F2_7MV	1.0	7MV range flatness correction 2 (100 Hz)
F3_7MV	1.0	7MV range flatness correction 3 (1 kHz)
F4_7MV	1.0	7MV range flatness correction 4 (10 kHz)
F5_7MV	1.0	7MV range flatness correction 5 (20 kHz)
F6_7MV	1.0	7MV range flatness correction 6 (50 kHz)
F7_7MV	1.0	7MV range flatness correction 7 (100 kHz)
F8_7MV	1.0	7MV range flatness correction 8 (300 kHz)
F9_7MV	1.0	7MV range flatness correction 9 (500 kHz)
F10_7MV	1.0	7MV range flatness correction 10 (800 kHz)
F11_7MV	1.0	7MV range flatness correction 11 (1 MHz)

Group DC_22MV

Name	Default	Function
DI_22MV	500.0	22MV range DAC volts per input volt
OF_22MV	0.0	22MV range DC offset

Group ZC_22MV

Name	Default	Function
Z_22MV	0.0	22MV range zero
SHO_22MV	0.0	22MV AUX input offset
IA_22MV	0.01	22MV range A/D volts per input volt

원문: Fluke Calibration 5790B 설명서 · 제조사 원문 자료입니다. 사양은 제조사 사정에 따라 변경될 수 있습니다.

Group AC_22MV

Name	Default	Function
F1_22MV	1.0	22MV range flatness correction 1 (10 Hz)
F2_22MV	1.0	22MV range flatness correction 2 (100 Hz)
F3_22MV	1.0	22MV range flatness correction 3 (1 kHz)
F4_22MV	1.0	22MV range flatness correction 4 (10 kHz)
F5_22MV	1.0	22MV range flatness correction 5 (20 kHz)
F6_22MV	1.0	22MV range flatness correction 6 (50 kHz)
F7_22MV	1.0	22MV range flatness correction 7 (100 kHz)
F8_22MV	1.0	22MV range flatness correction 8 (300 kHz)
F9_22MV	1.0	22MV range flatness correction 9 (500 kHz)
F10_22MV	1.0	22MV range flatness correction 10 (1 MHz)

Group DC_70MV

Name	Default	Function
DI_70MV	100.0	70MV range DAC volts per input volt
OF_70MV	0.0	70MV range DC offset

Group ZC_70MV

Name	Default	Function
Z_70MV	0.0	70MV range zero
SHO_70MV	0.0	70MV AUX input offset
IA_70MV	0.0316228	70MV range A/D volts per input volt

Group AC_70MV

Name	Default	Function
F1_70MV	1.0	70MV range flatness correction 1 (10 Hz)
F2_70MV	1.0	70MV range flatness correction 2 (100 Hz)
F3_70MV	1.0	70MV range flatness correction 3 (1 kHz)
F4_70MV	1.0	70MV range flatness correction 4 (10 kHz)
F5_70MV	1.0	70MV range flatness correction 5 (20 kHz)
F6_70MV	1.0	70MV range flatness correction 6 (50 kHz)
F7_70MV	1.0	70MV range flatness correction 7 (100 kHz)
F8_70MV	1.0	70MV range flatness correction 8 (300 kHz)
F9_70MV	1.0	70MV range flatness correction 9 (500 kHz)
F10_70MV	1.0	70MV range flatness correction 10 (1 MHz)

원문: Fluke Calibration 5790B 설명서 · 제조사 원문 자료입니다. 사양은 제조사 사정에 따라 변경될 수 있습니다.

Group DC_220MV

Name	Default	Function
DI_220MV	50.0	220MV range DAC volts per input volt
OF_220MV	0.0	220MV range DC offset

Group ZC_220MV

Name	Default	Function
Z_220MV	0.0	220MV range zero
SHO_220MV	0.0	220MV AUX input offset
IA_220MV	0.1	220MV range A/D volts per input volt

Group AC_220MV

Name	Default	Function
F1_220MV	1.0	220MV range flatness correction 1 (10 Hz)
F2_220MV	1.0	220MV range flatness correction 2 (100 Hz)
F3_220MV	1.0	220MV range flatness correction 3 (1 kHz)
F4_220MV	1.0	220MV range flatness correction 4 (10 kHz)
F5_220MV	1.0	220MV range flatness correction 5 (20 kHz)
F6_220MV	1.0	220MV range flatness correction 6 (50 kHz)
F7_220MV	1.0	220MV range flatness correction 7 (100 kHz)
F8_220MV	1.0	220MV range flatness correction 8 (300 kHz)
F9_220MV	1.0	220MV range flatness correction 9 (500 kHz)
F10_220MV	1.0	220MV range flatness correction 10 (1 MHz)

Group DC_700MV

Name	Default	Function
DI_700MV	10.0	700MV range DAC volts per input volt
OF_700MV	0.0	700MV range DC offset

Group ZC_700MV

Name	Default	Function
Z_700MV	0.0	700MV range zero
SHO_700MV	0.0	700MV AUX input offset
IA_700MV	0.316228	700MV range A/D volts per input volt

원문: Fluke Calibration 5790B 설명서 · 제조사 원문 자료입니다. 사양은 제조사 사정에 따라 변경될 수 있습니다.

Group AC_700MV

Name	Default	Function
F1_700MV	1.0	700MV range flatness correction 1 (10 Hz)
F2_700MV	1.0	700MV range flatness correction 2 (100 Hz)
F3_700MV	1.0	700MV range flatness correction 3 (1 kHz)
F4_700MV	1.0	700MV range flatness correction 4 (10 kHz)
F5_700MV	1.0	700MV range flatness correction 5 (20 kHz)
F6_700MV	1.0	700MV range flatness correction 6 (50 kHz)
F7_700MV	1.0	700MV range flatness correction 7 (100 kHz)
F8_700MV	1.0	700MV range flatness correction 8 (300 kHz)
F9_700MV	1.0	700MV range flatness correction 9 (500 kHz)
F10_700MV	1.0	700MV range flatness correction 10 (1 MHz)

Group DC_2_2V

Name	Default	Function
DI_2_2V	5.0	2_2V range DAC volts per input volt
OF_2_2V	0.0	2_2V range DC offset

Group ZC_2_2V

Name	Default	Function
Z_2_2V	0.0	2_2V range zero
SHO_2_2V	0.0	2_2V AUX input offset
IA_2_2V	1.0	2_2V range A/D volts per input volt

Group AC_2_2V

Name	Default	Function
F1_2_2V	1.0	2_2V range flatness correction 1 (10 Hz)
F2_2_2V	1.0	2_2V range flatness correction 2 (100 Hz)
F3_2_2V	1.0	2_2V range flatness correction 3 (1 kHz)
F4_2_2V	1.0	2_2V range flatness correction 4 (10 kHz)
F5_2_2V	1.0	2_2V range flatness correction 5 (20 kHz)
F6_2_2V	1.0	2_2V range flatness correction 6 (50 kHz)
F7_2_2V	1.0	2_2V range flatness correction 7 (100 kHz)
F8_2_2V	1.0	2_2V range flatness correction 8 (300 kHz)
F9_2_2V	1.0	2_2V range flatness correction 9 (500 kHz)
F10_2_2V	1.0	2_2V range flatness correction 10 (1 MHz)

원문: Fluke Calibration 5790B 설명서 · 제조사 원문 자료입니다. 사양은 제조사 사정에 따라 변경될 수 있습니다.

Group DC_7V

Name	Default	Function
DI_7V	1.0	7V range DAC volts per input volt
OF_7V	0.0	7V range DC offset

Group ZC_7V

Name	Default	Function
Z_7V	0.0	7V range zero
SHO_7V	0.0	7V AUX input offset
IA_7V	3.16228	7V range A/D volts per input volt

Group AC_7V

Name	Default	Function
F1_7V	1.0	7V range flatness correction 1 (10 Hz)
F2_7V	1.0	7V range flatness correction 2 (100 Hz)
F3_7V	1.0	7V range flatness correction 3 (1 kHz)
F4_7V	1.0	7V range flatness correction 4 (10 kHz)
F5_7V	1.0	7V range flatness correction 5 (20 kHz)
F6_7V	1.0	7V range flatness correction 6 (50 kHz)
F7_7V	1.0	7V range flatness correction 7 (100 kHz)

Group ZC_7VHF

Name	Default	Function
Z_7VHF	0.0	7VHF range zero
SHO_7VHF	0.0	7VHF AUX input offset
IA_7VHF	3.16228	7VHF range A/D volts per input volt

Group AC_7VHF

Name	Default	Function
F1_7VHF	1.0	7VHF range flatness correction 1 (100 kHz)
F2_7VHF	1.0	7VHF range flatness correction 2 (300 kHz)
F3_7VHF	1.0	7VHF range flatness correction 3 (500 kHz)
F4_7VHF	1.0	7VHF range flatness correction 4 (800 kHz)
F5_7VHF	1.0	7VHF range flatness correction 5 (1 MHz)

원문: Fluke Calibration 5790B 설명서 · 제조사 원문 자료입니다. 사양은 제조사 사정에 따라 변경될 수 있습니다.

Group DC_22V

Name	Default	Function
DI_22V	0.5	22V range DAC volts per input volt
OF_22V	0.0	22V range DC offset

Group ZC_22V

Name	Default	Function
Z_22V	0.0	22V range zero
SHO_22V	0.0	22V AUX input offset
IA_22V	10.0	22V range A/D volts per input volt

Group AC_22V

Name	Default	Function
F1_22V	1.0	22V range flatness correction 1 (10 Hz)
F2_22V	1.0	22V range flatness correction 2 (100 Hz)
F3_22V	1.0	22V range flatness correction 3 (1 kHz)
F4_22V	1.0	22V range flatness correction 4 (10 kHz)
F5_22V	1.0	22V range flatness correction 5 (20 kHz)
F6_22V	1.0	22V range flatness correction 6 (50 kHz)
F7_22V	1.0	22V range flatness correction 7 (100 kHz)

Group ZC_22VHF

Name	Default	Function
Z_22VHF	0.0	22VHF range zero
SHO_22VHF	0.0	22VHF AUX input offset
IA_22VHF	10.0	22VHF range A/D volts per input volt

Group AC_22VHF

Name	Default	Function
F1_22VHF	1.0	22VHF range flatness correction 1 (100 kHz)
F2_22VHF	1.0	22VHF range flatness correction 2 (300 kHz)
F3_22VHF	1.0	22VHF range flatness correction 3 (500 kHz)
F4_22VHF	1.0	22VHF range flatness correction 4 (800 kHz)
F5_22VHF	1.0	22VHF range flatness correction 5 (1 MHz)

원문: Fluke Calibration 5790B 설명서 · 제조사 원문 자료입니다. 사양은 제조사 사정에 따라 변경될 수 있습니다.

Group DC_70V

Name	Default	Function
DI_70V	0.1	70V range DAC volts per input volt
OF_70V	0.0	70V range DC offset

Group ZC_70V

Name	Default	Function
Z_70V	0.0	70V range zero
SHO_70V	0.0	70V AUX input offset
IA_70V	31.6228	70V range A/D volts per input volt

Group AC_70V

Name	Default	Function
F1_70V	1.0	70V range flatness correction 1 (10 Hz)
F2_70V	1.0	70V range flatness correction 2 (100 Hz)
F3_70V	1.0	70V range flatness correction 3 (1 kHz)
F4_70V	1.0	70V range flatness correction 4 (10 kHz)
F5_70V	1.0	70V range flatness correction 5 (20 kHz)
F6_70V	1.0	70V range flatness correction 6 (50 kHz)
F7_70V	1.0	70V range flatness correction 7 (100 kHz)
F8_70V	1.0	70V range flatness correction 8 (300 kHz)
F9_70V	1.0	70V range flatness correction 9 (500 kHz)
F10_70V	1.0	70V range flatness correction 10 (1 MHz)

Group DC_220V

Name	Default	Function
DI_220V	0.05	220V range DAC volts per input volt
OF_220V	0.0	220V range DC offset

Group ZC_220V

Name	Default	Function
Z_220V	0.0	220V range zero
SHO_220V	0.0	220V AUX input offset
IA_220V	100.0	220V range A/D volts per input volt

원문: Fluke Calibration 5790B 설명서 · 제조사 원문 자료입니다. 사양은 제조사 사정에 따라 변경될 수 있습니다.

Group AC_220V

Name	Default	Function
F1_220V	1.0	220V range flatness correction 1 (10 Hz)
F2_220V	1.0	220V range flatness correction 2 (100 Hz)
F3_220V	1.0	220V range flatness correction 3 (1 kHz)
F4_220V	1.0	220V range flatness correction 4 (10 kHz)
F5_220V	1.0	220V range flatness correction 5 (20 kHz)
F6_220V	1.0	220V range flatness correction 6 (50 kHz)
F7_220V	1.0	220V range flatness correction 7 (100 kHz)
F8_220V	1.0	220V range flatness correction 8 (300 kHz)

Group DC_700V

Name	Default	Function
DI_700V	0.01	700V range DAC volts per input volt
OF_700V	0.0	700V range DC offset

Group ZC_700V

Name	Default	Function
Z_700V	0.0	700V range zero
SHO_700V	0.0	700V AUX input offset
IA_700V	316.228	700V range A/D volts per input volt

Group AC_700V

Name	Default	Function
F1_700V	1.0	700V range flatness correction 1 (10 Hz)
F2_700V	1.0	700V range flatness correction 2 (100 Hz)
F3_700V	1.0	700V range flatness correction 3 (1 kHz)
F4_700V	1.0	700V range flatness correction 4 (10 kHz)
F5_700V	1.0	700V range flatness correction 5 (20 kHz)
F6_700V	1.0	700V range flatness correction 6 (50 kHz)
F7_700V	1.0	700V range flatness correction 7 (100 kHz)

원문: Fluke Calibration 5790B 설명서 · 제조사 원문 자료입니다. 사양은 제조사 사정에 따라 변경될 수 있습니다.

Group DC_1000V

Name	Default	Function
DI_1000V	0.005	1000V range DAC volts per input volt
OF_1000V	0.0	1000V range DC offset

Group ZC_1000V

Name	Default	Function
Z_1000V	0.0	1000V range zero
SHO_1000V	0.0	1000V AUX input offset
IA_1000V	1000.0	1000V range A/D volts per input volt

Group AC_1000V

Name	Default	Function
F1_1000V	1.0	1000V range flatness correction 1 (10 Hz)
F2_1000V	1.0	1000V range flatness correction 2 (100 Hz)
F3_1000V	1.0	1000V range flatness correction 3 (1 kHz)
F4_1000V	1.0	1000V range flatness correction 4 (10 kHz)
F5_1000V	1.0	1000V range flatness correction 5 (20 kHz)
F6_1000V	1.0	1000V range flatness correction 6 (50 kHz)
F7_1000V	1.0	1000V range flatness correction 7 (100 kHz)

Group WDC_2_2MV

Name	Default	Function
DI_2_2MV_WB	5000.0	2_2MV range, wideband input, DAC volts per input volt
IA_2_2MV_WB	0.0316228	2_2MV range A/D volts per input volt

원문: Fluke Calibration 5790B 설명서 · 제조사 원문 자료입니다. 사양은 제조사 사정에 따라 변경될 수 있습니다.

Group WAC_2_2MV

Name	Default	Function
F1_2_2MV_WB	1.0	2_2MV range, wideband input, flatness correction 1 (10 Hz)
F2_2_2MV_WB	1.0	2_2MV range, wideband input, flatness correction 2 (50 Hz)
F3_2_2MV_WB	1.0	2_2MV range, wideband input, flatness correction 3 (400 Hz)
F4_2_2MV_WB	1.0	2_2MV range, wideband input, flatness correction 4 (1 kHz)
F5_2_2MV_WB	1.0	2_2MV range, wideband input, flatness correction 5 (2 kHz)
F6_2_2MV_WB	1.0	2_2MV range, wideband input, flatness correction 6 (6 kHz)
F7_2_2MV_WB	1.0	2_2MV range, wideband input, flatness correction 7 (10 kHz)
F8_2_2MV_WB	1.0	2_2MV range, wideband input, flatness correction 8 (20 kHz)
F9_2_2MV_WB	1.0	2_2MV range, wideband input, flatness correction 9 (50 kHz)
F10_2_2MV_WB	1.0	2_2MV range, wideband input, flatness correction 10 (70 kHz)
F11_2_2MV_WB	1.0	2_2MV range, wideband input, flatness correction 11 (100 kHz)
F12_2_2MV_WB	1.0	2_2MV range, wideband input, flatness correction 12 (500 kHz)
F13_2_2MV_WB	1.0	2_2MV range, wideband input, flatness correction 13 (2 MHz)
F14_2_2MV_WB	1.0	2_2MV range, wideband input, flatness correction 14 (4 MHz)
F15_2_2MV_WB	1.0	2_2MV range, wideband input, flatness correction 15 (9 MHz)
F16_2_2MV_WB	1.0	2_2MV range, wideband input, flatness correction 16 (12 MHz)
F17_2_2MV_WB	1.0	2_2MV range, wideband input, flatness correction 17 (16 MHz)
F18_2_2MV_WB	1.0	2_2MV range, wideband input, flatness correction 18 (20 MHz)
F19_2_2MV_WB	1.0	2_2MV range, wideband input, flatness correction 19 (30 MHz)
F20_2_2MV_WB	1.0	2_2MV range, wideband input, flatness correction 20 (35 MHz)
F21_2_2MV_WB	1.0	2_2MV range, wideband input, flatness correction 21 (40 MHz)
F22_2_2MV_WB	1.0	2_2MV range, wideband input, flatness correction 22 (45 MHz)
F23_2_2MV_WB	1.0	2_2MV range, wideband input, flatness correction 23 (50 MHz)

원문: Fluke Calibration 5790B 설명서 · 제조사 원문 자료입니다. 사양은 제조사 사정에 따라 변경될 수 있습니다.

Group WDC_7MV

Name	Default	Function
DI_7MV_WB	1000.0	7MV range, wideband input, DAC volts per input volt
IA_7MV_WB	0.1	7MV range A/D volts per input volt

Group WAC_7MV

Name	Default	Function
F1_7MV_WB	1.0	7MV range, wideband input, flatness correction 1 (10 Hz)
F2_7MV_WB	1.0	7MV range, wideband input, flatness correction 2 (50 Hz)
F3_7MV_WB	1.0	7MV range, wideband input, flatness correction 3 (400 Hz)
F4_7MV_WB	1.0	7MV range, wideband input, flatness correction 4 (1 kHz)
F5_7MV_WB	1.0	7MV range, wideband input, flatness correction 5 (2 kHz)
F6_7MV_WB	1.0	7MV range, wideband input, flatness correction 6 (6 kHz)
F7_7MV_WB	1.0	7MV range, wideband input, flatness correction 7 (10 kHz)
F8_7MV_WB	1.0	7MV range, wideband input, flatness correction 8 (20 kHz)
F9_7MV_WB	1.0	7MV range, wideband input, flatness correction 9 (50 kHz)
F10_7MV_WB	1.0	7MV range, wideband input, flatness correction 10 (70 kHz)
F11_7MV_WB	1.0	7MV range, wideband input, flatness correction 11 (100 kHz)
F12_7MV_WB	1.0	7MV range, wideband input, flatness correction 12 (500 kHz)
F13_7MV_WB	1.0	7MV range, wideband input, flatness correction 13 (2 MHz)
F14_7MV_WB	1.0	7MV range, wideband input, flatness correction 14 (4 MHz)
F15_7MV_WB	1.0	7MV range, wideband input, flatness correction 15 (9 MHz)
F16_7MV_WB	1.0	7MV range, wideband input, flatness correction 16 (12 MHz)
F17_7MV_WB	1.0	7MV range, wideband input, flatness correction 17 (16 MHz)
F18_7MV_WB	1.0	7MV range, wideband input, flatness correction 18 (20 MHz)
F19_7MV_WB	1.0	7MV range, wideband input, flatness correction 19 (30 MHz)
F20_7MV_WB	1.0	7MV range, wideband input, flatness correction 20 (35 MHz)
F21_7MV_WB	1.0	7MV range, wideband input, flatness correction 21 (40 MHz)
F22_7MV_WB	1.0	7MV range, wideband input, flatness correction 22 (45 MHz)
F23_7MV_WB	1.0	7MV range, wideband input, flatness correction 23 (50 MHz)

원문: Fluke Calibration 5790B 설명서 · 제조사 원문 자료입니다. 사양은 제조사 사정에 따라 변경될 수 있습니다.

Group WDC_22MV

Name	Default	Function
DI_22MV_WB	500.0	22MV range, wideband input, DAC volts per input volt
IA_22MV_WB	0.316228	22MV range A/D volts per input volt

Group WAC_22MV

Name	Default	Function
F1_22MV_WB	1.0	22MV range, wideband input, flatness correction 1 (10 Hz)
F2_22MV_WB	1.0	22MV range, wideband input, flatness correction 2 (50 Hz)
F3_22MV_WB	1.0	22MV range, wideband input, flatness correction 3 (400 Hz)
F4_22MV_WB	1.0	22MV range, wideband input, flatness correction 4 (1 kHz)
F5_22MV_WB	1.0	22MV range, wideband input, flatness correction 5 (2 kHz)
F6_22MV_WB	1.0	22MV range, wideband input, flatness correction 6 (6 kHz)
F7_22MV_WB	1.0	22MV range, wideband input, flatness correction 7 (10 kHz)
F8_22MV_WB	1.0	22MV range, wideband input, flatness correction 8 (20 kHz)
F9_22MV_WB	1.0	22MV range, wideband input, flatness correction 9 (50 kHz)
F10_22MV_WB	1.0	22MV range, wideband input, flatness correction 10 (70 kHz)
F11_22MV_WB	1.0	22MV range, wideband input, flatness correction 11 (100 kHz)
F12_22MV_WB	1.0	22MV range, wideband input, flatness correction 12 (500 kHz)
F13_22MV_WB	1.0	22MV range, wideband input, flatness correction 13 (2 MHz)
F14_22MV_WB	1.0	22MV range, wideband input, flatness correction 14 (4 MHz)
F15_22MV_WB	1.0	22MV range, wideband input, flatness correction 15 (9 MHz)
F16_22MV_WB	1.0	22MV range, wideband input, flatness correction 16 (12 MHz)
F17_22MV_WB	1.0	22MV range, wideband input, flatness correction 17 (16 MHz)
F18_22MV_WB	1.0	22MV range, wideband input, flatness correction 18 (20 MHz)
F19_22MV_WB	1.0	22MV range, wideband input, flatness correction 19 (30 MHz)
F20_22MV_WB	1.0	22MV range, wideband input, flatness correction 20 (35 MHz)
F21_22MV_WB	1.0	22MV range, wideband input, flatness correction 21 (40 MHz)
F22_22MV_WB	1.0	22MV range, wideband input, flatness correction 22 (45 MHz)
F23_22MV_WB	1.0	22MV range, wideband input, flatness correction 23 (50 MHz)

Group WDC_70MV

Name	Default	Function
DI_70MV_WB	100.0	70MV range, wideband input, DAC volts per input volt
IA_70MV_WB	1.0	70MV range A/D volts per input volt

원문: Fluke Calibration 5790B 설명서 · 제조사 원문 자료입니다. 사양은 제조사 사정에 따라 변경될 수 있습니다.

Group WAC_70MV

Name	Default	Function
F1_70MV_WB	1.0	70MV range, wideband input, flatness correction 1 (10 Hz)
F2_70MV_WB	1.0	70MV range, wideband input, flatness correction 2 (50 Hz)
F3_70MV_WB	1.0	70MV range, wideband input, flatness correction 3 (400 Hz)
F4_70MV_WB	1.0	70MV range, wideband input, flatness correction 4 (1 kHz)
F5_70MV_WB	1.0	70MV range, wideband input, flatness correction 5 (2 kHz)
F6_70MV_WB	1.0	70MV range, wideband input, flatness correction 6 (6 kHz)
F7_70MV_WB	1.0	70MV range, wideband input, flatness correction 7 (10 kHz)
F8_70MV_WB	1.0	70MV range, wideband input, flatness correction 8 (20 kHz)
F9_70MV_WB	1.0	70MV range, wideband input, flatness correction 9 (50 kHz)
F10_70MV_WB	1.0	70MV range, wideband input, flatness correction 10 (70 kHz)
F11_70MV_WB	1.0	70MV range, wideband input, flatness correction 11 (100 kHz)
F12_70MV_WB	1.0	70MV range, wideband input, flatness correction 12 (500 kHz)
F13_70MV_WB	1.0	70MV range, wideband input, flatness correction 13 (2 MHz)
F14_70MV_WB	1.0	70MV range, wideband input, flatness correction 14 (4 MHz)
F15_70MV_WB	1.0	70MV range, wideband input, flatness correction 15 (9 MHz)
F16_70MV_WB	1.0	70MV range, wideband input, flatness correction 16 (12 MHz)
F17_70MV_WB	1.0	70MV range, wideband input, flatness correction 17 (16 MHz)
F18_70MV_WB	1.0	70MV range, wideband input, flatness correction 18 (20 MHz)
F19_70MV_WB	1.0	70MV range, wideband input, flatness correction 19 (30 MHz)
F20_70MV_WB	1.0	70MV range, wideband input, flatness correction 20 (35 MHz)
F21_70MV_WB	1.0	70MV range, wideband input, flatness correction 21 (40 MHz)
F22_70MV_WB	1.0	70MV range, wideband input, flatness correction 22 (45 MHz)
F23_70MV_WB	1.0	70MV range, wideband input, flatness correction 23 (50 MHz)

원문: Fluke Calibration 5790B 설명서 · 제조사 원문 자료입니다. 사양은 제조사 사정에 따라 변경될 수 있습니다.

Group WDC_220MV

Name	Default	Function
DI_220MV_WB	31.6228	220MV range, wideband input, DAC volts per input volt
IA_220MV_WB	3.16228	220MV range A/D volts per input volt

Group WAC_220MV

Name	Default	Function
F1_220MV_WB	1.0	220MV range, wideband input, flatness correction 1 (10 Hz)
F2_220MV_WB	1.0	220MV range, wideband input, flatness correction 2 (50 Hz)
F3_220MV_WB	1.0	220MV range, wideband input, flatness correction 3 (400 Hz)
F4_220MV_WB	1.0	220MV range, wideband input, flatness correction 4 (1 kHz)
F5_220MV_WB	1.0	220MV range, wideband input, flatness correction 5 (4 kHz)
F6_220MV_WB	1.0	220MV range, wideband input, flatness correction 6 (30 kHz)
F7_220MV_WB	1.0	220MV range, wideband input, flatness correction 7 (100 kHz)
F8_220MV_WB	1.0	220MV range, wideband input, flatness correction 8 (300 kHz)
F9_220MV_WB	1.0	220MV range, wideband input, flatness correction 9 (1 MHz)
F10_220MV_WB	1.0	220MV range, wideband input, flatness correction 10 (4 MHz)
F11_220MV_WB	1.0	220MV range, wideband input, flatness correction 11 (10 MHz)
F12_220MV_WB	1.0	220MV range, wideband input, flatness correction 12 (20 MHz)
F13_220MV_WB	1.0	220MV range, wideband input, flatness correction 13 (30 MHz)
F14_220MV_WB	1.0	220MV range, wideband input, flatness correction 14 (40 MHz)
F15_220MV_WB	1.0	220MV range, wideband input, flatness correction 15 (50 MHz)

원문: Fluke Calibration 5790B 설명서 · 제조사 원문 자료입니다. 사양은 제조사 사정에 따라 변경될 수 있습니다.

Group WDC_700MV

Name	Default	Function
DI_700MV_WB	10.0	700MV range, wideband input, DAC volts per input volt
IA_700MV_WB	10.0	700MV range A/D volts per input volt

Group WAC_700MV

Name	Default	Function
F1_700MV_WB	1.0	700MV range, wideband input, flatness correction 1 (10 Hz)
F2_700MV_WB	1.0	700MV range, wideband input, flatness correction 2 (50 Hz)
F3_700MV_WB	1.0	700MV range, wideband input, flatness correction 3 (400 Hz)
F4_700MV_WB	1.0	700MV range, wideband input, flatness correction 4 (1 kHz)
F5_700MV_WB	1.0	700MV range, wideband input, flatness correction 5 (4 kHz)
F6_700MV_WB	1.0	700MV range, wideband input, flatness correction 6 (30 kHz)
F7_700MV_WB	1.0	700MV range, wideband input, flatness correction 7 (100 kHz)
F8_700MV_WB	1.0	700MV range, wideband input, flatness correction 8 (300 kHz)
F9_700MV_WB	1.0	700MV range, wideband input, flatness correction 9 (1 MHz)
F10_700MV_WB	1.0	700MV range, wideband input, flatness correction 10 (4 MHz)
F11_700MV_WB	1.0	700MV range, wideband input, flatness correction 11 (10 MHz)
F12_700MV_WB	1.0	700MV range, wideband input, flatness correction 12 (20 MHz)
F13_700MV_WB	1.0	700MV range, wideband input, flatness correction 13 (30 MHz)
F14_700MV_WB	1.0	700MV range, wideband input, flatness correction 14 (40 MHz)
F15_700MV_WB	1.0	700MV range, wideband input, flatness correction 15 (50 MHz)

원문: Fluke Calibration 5790B 설명서 · 제조사 원문 자료입니다. 사양은 제조사 사정에 따라 변경될 수 있습니다.

Group WDC_2_2V

Name	Default	Function
DI_2_2V_WB	3.16228	2_2V range, wideband input, DAC volts per input volt
IA_2_2V_WB	31.6228	2_2V range A/D volts per input volt

Group WAC_2_2V

Name	Default	Function
F1_2_2V_WB	1.0	2_2V range, wideband input, flatness correction 1 (10 Hz)
F2_2_2V_WB	1.0	2_2V range, wideband input, flatness correction 2 (50 Hz)
F3_2_2V_WB	1.0	2_2V range, wideband input, flatness correction 3 (400 Hz)
F4_2_2V_WB	1.0	2_2V range, wideband input, flatness correction 4 (1 kHz)
F5_2_2V_WB	1.0	2_2V range, wideband input, flatness correction 5 (4 kHz)
F6_2_2V_WB	1.0	2_2V range, wideband input, flatness correction 6 (30 kHz)
F7_2_2V_WB	1.0	2_2V range, wideband input, flatness correction 7 (100 kHz)
F8_2_2V_WB	1.0	2_2V range, wideband input, flatness correction 8 (300 kHz)
F9_2_2V_WB	1.0	2_2V range, wideband input, flatness correction 9 (1 MHz)
F10_2_2V_WB	1.0	2_2V range, wideband input, flatness correction 10 (4 MHz)
F11_2_2V_WB	1.0	2_2V range, wideband input, flatness correction 11 (10 MHz)
F12_2_2V_WB	1.0	2_2V range, wideband input, flatness correction 12 (20 MHz)
F13_2_2V_WB	1.0	2_2V range, wideband input, flatness correction 13 (30 MHz)
F14_2_2V_WB	1.0	2_2V range, wideband input, flatness correction 14 (40 MHz)
F15_2_2V_WB	1.0	2_2V range, wideband input, flatness correction 15 (50 MHz)

Group WDC_7V

Name	Default	Function
DI_7V_WB	1.0	7V range, wideband input, DAC volts per input volt
IA_7V_WB	100.0	7V range A/D volts per input volt

원문: Fluke Calibration 5790B 설명서 · 제조사 원문 자료입니다. 사양은 제조사 사정에 따라 변경될 수 있습니다.

Group WAC_7V

Name	Default	Function
F1_7V_WB	1.0	7V range, wideband input, flatness correction 1 (10 Hz)
F2_7V_WB	1.0	7V range, wideband input, flatness correction 2 (50 Hz)
F3_7V_WB	1.0	7V range, wideband input, flatness correction 3 (400 Hz)
F4_7V_WB	1.0	7V range, wideband input, flatness correction 4 (1 kHz)
F5_7V_WB	1.0	7V range, wideband input, flatness correction 5 (4 kHz)
F6_7V_WB	1.0	7V range, wideband input, flatness correction 6 (30 kHz)
F7_7V_WB	1.0	7V range, wideband input, flatness correction 7 (100 kHz)
F8_7V_WB	1.0	7V range, wideband input, flatness correction 8 (300 kHz)
F9_7V_WB	1.0	7V range, wideband input, flatness correction 9 (1 MHz)
F10_7V_WB	1.0	7V range, wideband input, flatness correction 10 (4 MHz)
F11_7V_WB	1.0	7V range, wideband input, flatness correction 11 (10 MHz)
F12_7V_WB	1.0	7V range, wideband input, flatness correction 12 (20 MHz)
F13_7V_WB	1.0	7V range, wideband input, flatness correction 13 (30 MHz)
F14_7V_WB	1.0	7V range, wideband input, flatness correction 14 (40 MHz)
F15_7V_WB	1.0	7V range, wideband input, flatness correction 15 (50 MHz)

원문: Fluke Calibration 5790B 설명서 · 제조사 원문 자료입니다. 사양은 제조사 사정에 따라 변경될 수 있습니다.