RUSKA 2465A-754

Gas Piston Gauge

Users Manual

PN 3952328
November 2010
© 2010 Fluke Corporation. All rights reserved. Printed in USA. Specifications are subject to change without notice.
All product names are trademarks of their respective companies.

원문: Fluke Calibration 2465A 메뉴얼(영문) · 제조사 원문 자료입니다. 사양은 제조사 사정에 따라 변경될 수 있습니다.

LIMITED WARRANTY AND LIMITATION OF LIABILITY

Each Fluke product is warranted to be free from defects in material and workmanship under normal use and service. The warranty period is one year and begins on the date of shipment. Parts, product repairs, and services are warranted for 90 days. This warranty extends only to the original buyer or end-user customer of a Fluke authorized reseller, and does not apply to fuses, disposable batteries, or to any product which, in Fluke's opinion, has been misused, altered, neglected, contaminated, or damaged by accident or abnormal conditions of operation or handling. Fluke warrants that software will operate substantially in accordance with its functional specifications for 90 days and that it has been properly recorded on non-defective media. Fluke does not warrant that software will be error free or operate without interruption.

Fluke authorized resellers shall extend this warranty on new and unused products to end-user customers only but have no authority to extend a greater or different warranty on behalf of Fluke. Warranty support is available only if product is purchased through a Fluke authorized sales outlet or Buyer has paid the applicable international price. Fluke reserves the right to invoice Buyer for importation costs of repair/replacement parts when product purchased in one country is submitted for repair in another country.

Fluke's warranty obligation is limited, at Fluke's option, to refund of the purchase price, free of charge repair, or replacement of a defective product which is returned to a Fluke authorized service center within the warranty period.

To obtain warranty service, contact your nearest Fluke authorized service center to obtain return authorization information, then send the product to that service center, with a description of the difficulty, postage and insurance prepaid (FOB Destination). Fluke assumes no risk for damage in transit. Following warranty repair, the product will be returned to Buyer, transportation prepaid (FOB Destination). If Fluke determines that failure was caused by neglect, misuse, contamination, alteration, accident, or abnormal condition of operation or handling, including overvoltage failures caused by use outside the product's specified rating, or normal wear and tear of mechanical components, Fluke will provide an estimate of repair costs and obtain authorization before commencing the work. Following repair, the product will be returned to the Buyer transportation prepaid and the Buyer will be billed for the repair and return transportation charges (FOB Shipping Point).

THIS WARRANTY IS BUYER'S SOLE AND EXCLUSIVE REMEDY AND IS IN LIEU OF ALL OTHER WARRANTIES, EXPRESS OR IMPLIED, INCLUDING BUT NOT LIMITED TO ANY IMPLIED WARRANTY OF MERCHANTABILITY OR FITNESS FOR A PARTICULAR PURPOSE. FLUKE SHALL NOT BE LIABLE FOR ANY SPECIAL, INDIRECT, INCIDENTAL, OR CONSEQUENTIAL DAMAGES OR LOSSES, INCLUDING LOSS OF DATA, ARISING FROM ANY CAUSE OR THEORY.

Since some countries or states do not allow limitation of the term of an implied warranty, or exclusion or limitation of incidental or consequential damages, the limitations and exclusions of this warranty may not apply to every buyer. If any provision of this Warranty is held invalid or unenforceable by a court or other decision-maker of competent jurisdiction, such holding will not affect the validity or enforceability of any other provision.

Fluke Corporation
P.O. Box 9090
Everett, WA 98206-9090
U.S.A.

Fluke Europe B.V.
P.O. Box 1186
5602 BD Eindhoven
The Netherlands

11/99

To register your product online, visit register.fluke.com

Table of Contents

Chapter	Title	Page
1	**Specifications**	**1-1**
	Low Range Piston	1-1
	Lower Mid Range Piston	1-1
	Upper Mid Range Piston	1-2
	High Range Piston	1-2
	Mass Set	1-2
	Temperature Range	1-3
	Humidity Range	1-3
	Pressure Medium	1-3
	Pressure	1-3
	Power Requirements	1-3
2	**General Piston Pressure Gauge Considerations**	**2-1**
	Introduction	2-1
	How to Contact Fluke	2-1
	Safety Information	2-1
	Symbols Used in this Manual	2-2
	Types of Piston Pressure Gauges	2-3
	Calculations	2-5
	Measurement of Pressure with the Piston Pressure Gauge	2-5
	Elastic Distortion of the Cylinder	2-5
	Gravity	2-5
	Buoyant Effect of the Air	2-6
	Temperature	2-7
	Reference Plane of Measurements	2-7
	Crossfloating	2-9
	Bibliography	2-10
3	**Description**	**3-1**
	General Information	3-1
	Description of the Mass Set	3-2
4	**Installation**	**4-1**

원문: Fluke Calibration 2465A 메뉴얼(영문) · 제조사 원문 자료입니다. 사양은 제조사 사정에 따라 변경될 수 있습니다.

Introduction 4-1

5 Operation 5-1

Precautions 5-1
General 5-2
Low Range Piston Assembly 5-2
Mid Range Piston Assembly 5-6
35 Bar Assembly 5-8
High Range Piston Assembly 5-9
Establishing Gauge Pressures 5-10
Gauge Pressures 5-10
Maintenance of the Gauge 5-11

6 Piston/Cylinder Cleaning Instructions 6-1

General Information and Preparation 6-1
Functional Testing of Piston/Cylinder Assemblies 6-2
Cleaning the Low Range Piston/Cylinder Assembly 6-2
Mid Range Piston/Cylinder 6-6
Cleaning the 35 Bar Piston/Cylinder Assembly 6-8
Cleaning the High Range Piston/Cylinder Assembly 6-11

Appendices

A Calculations A-1
B Drawings and Bills of Materials B-1

원문: Fluke Calibration 2465A 메뉴얼(영문) · 제조사 원문 자료입니다. 사양은 제조사 사정에 따라 변경될 수 있습니다.

List of Tables

Table	Title	Page
2-1.	Symbols	2-2

원문: Fluke Calibration 2465A 메뉴얼(영문) · 제조사 원문 자료입니다. 사양은 제조사 사정에 따라 변경될 수 있습니다.

원문: Fluke Calibration 2465A 메뉴얼(영문) · 제조사 원문 자료입니다. 사양은 제조사 사정에 따라 변경될 수 있습니다.

List of Figures

Figure	Title	Page
2-1.	Simple Cylinder	2-3
2-2.	Re-Entrant Cylinder	2-3
2-3.	Controlled Clearance Cylinder	2-3
2-4.	Reference Plane Determination	2-8
2-5.	Head Correction Measurement	2-9
3-1.	Gas Piston Gauge - Top View	3-2
3-2.	Gas Piston Gauge - Front View	3-3
5-1.	Stackup for Piston Operation	5-2
5-2.	Parts Required For Low Range Piston Operation	5-3
5-3.	Removing Low Range Piston and Cylinder from Container - Step 1	5-4
5-4.	Removing Low Range Piston and Cylinder from Container - Step 2	5-4
5-5.	Handling the Low Range Piston and Cylinder	5-5
5-6.	Low Range Piston and Cylinder Showing O-Ring Groove	5-5
5-7.	Positioning the Upper Thrust Washer/Piston Retainer in the Cylinder Retaining Cap Recess	5-6
5-8.	Parts Required for Operation of the Mid Range Piston/Cylinder	5-7
5-9.	Mid Range Piston/Cylinder Assembly	5-7
5-10.	Retaining Nut and Bearing	5-8
5-11.	Parts Required for Operation of the 35 Bar P/C	5-8
5-12.	Parts Required for High Range Piston Operation	5-9
6-1.	Materials for Cleaning the Low Range Piston/Cylinder	6-3
6-2.	Preparations for Cleaning the Low Range Cylinder - Step 1	6-3
6-3.	Preparing the Kimwipes - Step 2	6-4
6-4.	Preparing the Kimwipes - Step 3	6-4
6-5.	Preparing the Low Range Cleaning Tool - Step 1	6-5
6-6.	Preparing the Low Range Cleaning Tool - Step 2	6-5
6-7.	Materials for Cleaning the Mid Range Piston/Cylinder	6-7
6-8.	Preparing the Mid Range Cleaning Tool	6-7
6-9.	Materials for Cleaning the High Range Piston Cylinder	6-9
6-10.	Preparing Kimwipes for Cleaning the High Range Cylinder - Step 1	6-9
6-11.	Preparing Kimwipes for Cleaning the High Range Cylinder - Step 2	6-10
6-12.	Preparing Kimwipes for Cleaning the High Range Cylinder - Step 3	6-10
6-13.	Cleaning the High Range Cylinder	6-12
6-14.	Drying the High Range Cylinder	6-12

원문: Fluke Calibration 2465A 메뉴얼(영문) · 제조사 원문 자료입니다. 사양은 제조사 사정에 따라 변경될 수 있습니다.

원문: Fluke Calibration 2465A 메뉴얼(영문) · 제조사 원문 자료입니다. 사양은 제조사 사정에 따라 변경될 수 있습니다.

Chapter 1
Specifications

Low Range Piston

Pressure Range (Model 2465)	1.4 to 172 kPa (0.2 to 25 psi) absolute, gauge or negative gauge (1)
Pressure Range (Model 2468)	1.4 to 345 kPa (0.2 to 50 psi) absolute, gauge or negative gauge (1)
Pressure Uncertainty Rating	0.0010% RDG (10 ppm) or 0.07 Pa (1.0E-05 psi), whichever is greater (2, 3)
Uncertainty Threshold	7 kPa (1 psi)
Resolution	1 ppm or 1 mg, whichever is greater
Precision (Typical Type A Unc.)	2 ppm (3)
Long Term Stability	1 ppm per year
Piston/Cylinder Material	440C Stainless Steel/Tungsten Carbide
Thermal Coefficient	1.5E-05 per deg. C
Maximum Sink Rate	Model 2465 at Max Pressure: 3.8 mm/minute (0.15 in/minute) Model 2468 at Mid Pressure: 1.27 mm/minute (0.05 in/minute)

Lower Mid Range Piston

Pressure Range (Model 2465):	12 to 700 kPa (1.7 to 100 psi) absolute or gauge
Pressure Range (Model 2468):	12 to 1380 kPa (1.7 to 200 psi) absolute or gauge
Pressure Uncertainty Rating:	0.0010% RDG (10 ppm) or 0.28 Pa (4.0E-05 psi), whichever is greater (2, 3)
Uncertainty Threshold:	27.6 kPa (4 psi)
Resolution:	1 ppm or 1 mg, whichever is greater
Precision (Typical Type A Unc.):	2 ppm (3)
Long Term Stability:	1 ppm per year
Piston/Cylinder Material:	Tungsten Carbide/Tungsten Carbide
Thermal Coefficient:	9.1E-06 per deg. C
Sink Rate at Maximum Pressure:	Model 2465 at Max Pressure: 3.8 mm/minute (0.15 in/minute) Model 2468 at Mid Pressure: 1.27 mm/minute (0.05 in/minute)

원문: Fluke Calibration 2465A 메뉴얼(영문) · 제조사 원문 자료입니다. 사양은 제조사 사정에 따라 변경될 수 있습니다.

Upper Mid Range Piston

Pressure Range (Model 2465)	14 to 3500 kPa (2 to 500 psi) absolute or gauge
Pressure Range (Model 2468)	14 to 7000 kPa (2 to 1000 psi) absolute or gauge
Pressure Uncertainty Rating	0.0026% RDG (26 ppm) or 2.8 Pa (4.0E-04 psi), whichever is greater [2, 3]
Uncertainty Threshold	110 kPa (16 psi)
Resolution	1 ppm or 1 mg, whichever is greater
Precision (Typical Type A Unc.)	2 ppm [3]
Long Term Stability	1 ppm per year
Piston/Cylinder Material	Tungsten Carbide/Tungsten Carbide
Thermal Coefficient	9.1E-06 per deg. C
Maximum Sink Rate	Model 2465 at Max Pressure: 3.8 mm/minute (0.15 in/minute) Model 2468 at Mid Pressure: 1.27 mm/minute (0.05 in/minute)

High Range Piston

Pressure Range	14 to 7000 kPa (2 to 1000) absolute or gauge
Pressure Uncertainty Rating	0.0026% RDG (26 ppm) or 2.8 Pa (4.0E-04 psi), whichever is greater [2, 3]
Uncertainty Threshold	248 kPa (36 psi)
Resolution	1 ppm or 1 mg, whichever is greater
Precision (Typical Type A Unc.)	2 ppm [3]
Long Term Stability	1 ppm per year
Piston/Cylinder Material	Tungsten Carbide/Tungsten Carbide
Thermal Coefficient	9.1E-06 per deg. C
Sink Rate at Maximum Pressure	Model 2465 at Max Pressure: 3.8 mm/minute (0.15 in/minute)

Mass Set

Approximate Total Mass Model 2465:	6.31 kg
Approximate Total Mass Model 2468:	12.31 kg
Approximate Carrier Mass:	0.1 kg
Smallest Increment:	10 gram
Mass Material:	300 Series, Non-magnetic, Austenitic, Stainless Steel [4]
Adjustment Method:	Completely machined with no fill cavities
Mass Uncertainty:	0.0005% (5 ppm) or 5E-07 kg, whichever is greater
Optional Fine Increment Trim Set	ASTM Class 1, 20g to 1 mg

원문: Fluke Calibration 2465A 메뉴얼(영문) · 제조사 원문 자료입니다. 사양은 제조사 사정에 따라 변경될 수 있습니다.

Temperature Range

Operating	18 ºC to 28 ºC
Storage	-40 ºC to 70 ºC [5]

Humidity Range

Operating	20% to 75% non-condensing
Storage	0% to 90% non-condensing

Pressure Medium

Clean dry gas, Nitrogen or equivalent, regulated to a Pressure Compatible with each particular piston/cylinder assembly. Dew Point of less than or equal to -51 ºC (-60 ºF).

Pressure

Maximum Working Pressure

2465		
With High Range Piston/Cylinder	7000 kPa	(1000 PSIG)
With Upper Mid Range Piston	3500 kPa	(500 PSIG)
With Low Range Piston/Cylinder	700 kPa	(100 PSIG)
With Lower Range Piston/Cylinder	172 kPa	(25 PSIG)
2468		
With Upper Mid Range Piston	7000 kPa	(1000 PSIG)
With Lower Mid Range Piston/Cylinder	1380 kPa	(200 PSIG)
With Low Range Piston/Cylinder	345 kPa	(50 PSIG)

Power Requirements

2465A-754 (DWG base): 15 watts, 115 VAC or 230 VAC; 50 or 60 Hz

(1) Negative gauge pressure limited by local barometric pressure.
(2) Absolute mode uncertainty higher due to reference pressure sensor.
(3) Approximate 95% level of confidence (Refer to Calibration Report.)
(4) Low mass carrier and plate may be of other non-magnetic material.
(5) Limited by dissimilar metals of Low range Piston/Cylinder.

원문: Fluke Calibration 2465A 메뉴얼(영문) · 제조사 원문 자료입니다. 사양은 제조사 사정에 따라 변경될 수 있습니다.

RUSKA 2465A-754
Users Manual

1-4

원문: Fluke Calibration 2465A 메뉴얼(영문) · 제조사 원문 자료입니다. 사양은 제조사 사정에 따라 변경될 수 있습니다.

Chapter 2
General Piston Pressure Gauge Considerations

Introduction

This manual contains operation and routine and preventive maintenance instructions for the RUSKA 2465A-754 Gas Piston Gauge manufactured by Fluke.

How to Contact Fluke

To order accessories, receive operating assistance, or get the location of the nearest Fluke distributor or Service Center, call:

- Technical Support USA: 1-800-99-FLUKE (1-800-993-5853)
- Calibration/Repair USA: 1-888-99-FLUKE (1-888-993-5853)
- Canada: 1-800-36-FLUKE (1-800-363-5853)
- Europe: +31-402-675-200
- China: +86-400-810-3435
- Japan: +81-3-3434-0181
- Singapore: +65-738-5655
- Anywhere in the world: +1-425-446-5500

Or, visit Fluke's website at www.fluke.com.

To register your product, visit http://register.fluke.com.

To view, print, or download the latest manual supplement, visit http://us.fluke.com/usen/support/manuals.

Safety Information

⚠ Warning

Pressurized vessels and associated equipment are potentially dangerous. The apparatus described in this manual should be operated only by personnel trained in procedures that will assure safety to themselves, to others, and to the equipment.

원문: Fluke Calibration 2465A 메뉴얼(영문) · 제조사 원문 자료입니다. 사양은 제조사 사정에 따라 변경될 수 있습니다.

⚠ Warning

Do not use oxygen as the pressure supply media. Use only dry, clean nitrogen. Do not exceed safe maximum inlet pressures as follows:

With low range piston/cylinder: (pounds per square inch absolute)	**40 PSIA**
With mid range piston/cylinder:	**115 PSIA**
With mid/high range piston/cylinder:	**515 PSIA**
With high range piston/cylinder:	**1015 PSIA**

⚠ Warning

Do not use hydrocarbon lubricants. Use only Fluke supplied lubricant, unless otherwise specified in this manual. Always use replacement parts specified by Fluke.

⚠ Warning

When any maintenance is performed, turn off power and remove power cord.

⚠ Caution

This instrument has been designed with components that will not introduce hydrocarbons into the calibration process. The O-ring and lubricating grease supplied with the instrument must not be substituted with other laboratory supplies.

Cleaning of the instrument for oxygen compatibility using liquid Freon and ultrasonic cleaning systems is permitted with the exception of the pistons and cylinders. The Fluke procedures for piston/cylinder cleaning as described in Chapter 6 of this manual must be followed. Ultrasonic cleaning may damage the crystalline structure of the tungsten carbide pistons and cylinders.

Symbols Used in this Manual

In this manual, a **Warning** identifies conditions and actions that pose a hazard to the user. A **Caution** identifies conditions and actions that may damage the Piston Pressure Gauge.

Symbols used on the Piston Pressure Gauge and in the manual are explained in Table 2-1.

Table 2-1. Symbols

Symbol	Description
~	AC (Alternating Current)
⏚	Earth Ground
⚠	Important Information: refer to manual
🗑	Do not dispose of this product as unsorted municipal waste. Go to Fluke's website for recycling information.

원문: Fluke Calibration 2465A 메뉴얼(영문) · 제조사 원문 자료입니다. 사양은 제조사 사정에 따라 변경될 수 있습니다.

⚠ Warning

If the equipment is used in a manner not specified by the manufacturer, the protection provided by the equipment may be impaired.

Types of Piston Pressure Gauges

The piston pressure gauge is sometimes regarded as an absolute instrument because of the principle by which it measures pressure. An absolute instrument is defined here as one capable of measuring a quantity in the fundamental units of mass, length, time, etc. It may be suggested that only certain types of piston pressure gauges qualify in this category.

Figures 2-1, 2-2, and 2-3 illustrate the three most common types of cylinder arrangements.

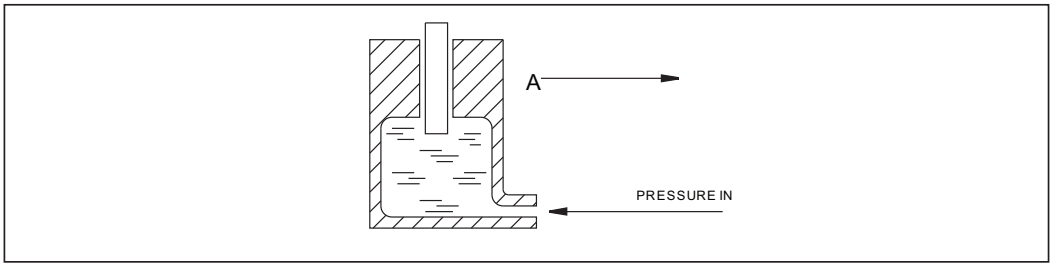

glg01.eps

Figure 2-1. Simple Cylinder

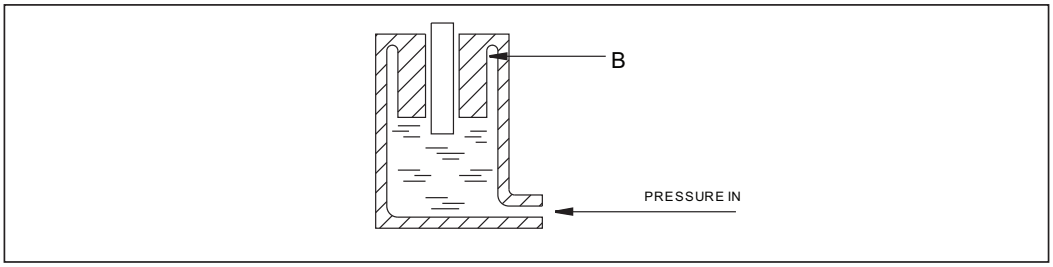

glg44.eps

Figure 2-2. Re-Entrant Cylinder

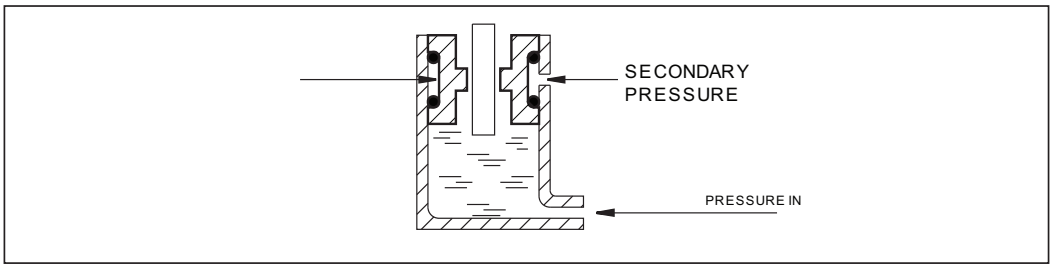

glg45.eps

Figure 2-3. Controlled Clearance Cylinder

When the simple cylinder of 2-1 is subjected to an increase in pressure, the fluid, exerting a relatively large total force, normal to the surface of confinement, expands the cylinder and thus increases its area. A pressure-drop appears across the cylinder wall near point A, resulting in an elastic dilation of the cylinder bore.

원문: Fluke Calibration 2465A 메뉴얼(영문) · 제조사 원문 자료입니다. 사양은 제조사 사정에 따라 변경될 수 있습니다.

It can be shown that the effective area of the piston and cylinder assembly is the mean of the individual areas of the piston and of the cylinder; therefore as the pressure is increased, the cylinder expands and the effective area becomes greater. The rate of increase is usually, but not always, a linear function of the applied pressure. The piston also suffers distortion from the end-loading effects and from the pressure of the fluid, but to a much lesser extent than the cylinder. It is evident then, that the simple cylinder of Figure 2-1 would be inadequate for a primary piston pressure gauge unless some means of predicting the change in area were available.

The increase in the effective area of the simple cylinder is also accompanied by an increase in the leakage of the fluid past the piston. Indeed, the leakage becomes so great at some pressures that at some pressure the floating will not be sufficient for an accurate pressure measurement.

In Figure 2-2, the pressure fluid is allowed to surround the body of the cylinder. The pressure drop occurs across the cylinder wall near the top of the cylinder at point B, but in the opposite direction to that of the simple cylinder in Figure 2-1. In consequence, the elastic distortion is directed toward the piston, tending to decrease the area of the cylinder.

Again, the change in area with changing pressure places a limit on the usefulness of the cylinder in 2-2 for its primary instrument. But some benefit does result from the use of this cylinder in the construction of a piston pressure gauge because higher pressures may be attained without a loss in float time. A small sacrifice is made in the float time at lower pressures because the total clearance between piston and cylinder must necessarily be greater at low pressure for the cylinder in 2-2 than for the cylinder in Figure 2-1.

In the controlled-clearance design of Figure 2-3, the cylinder is surrounded by a jacket to which a secondary fluid pressure system is connected. Adjustment of the secondary, or jacket, pressure permits the operator to change the clearance between the cylinder and piston at will. A series of observations involving piston sink rates at various jacket pressures leads to the empirical determination of the effective area of the assembly. Throughout the world, the controlled-clearance piston pressure gauge is an accepted standard of pressure.

Piston pressure gauges having very high resolution may be made by using simple and re-entrant cylinders. A determination of the distortion coefficients of such gauges may be made by direct comparison with a controlled-clearance gauge. Most piston pressure gauges have some elastic distortion, but some, used in the very low pressures, have only small coefficients and in some instances, correction for distortion may be neglected.

Measurement of pressure with the piston pressure gauge is subject to uncertainties resulting from effects other than those of elastic distortion. But, it was appropriate that the subject of elastic distortion be discussed first, since this characteristic is largely responsible for the various designs that have been developed.

Measurement processes proposed for high accuracy are disturbed by limitations in the performance of the equipment, by small changes in the environment and by operational procedures. The disturbances can be reduced to a degree by exercising control of the apparatus. Some of the disturbances are difficult to control; it is easier to observe their magnitudes and apply corrections for their effects.

The factors that affect a pressure measurement process when conducted with a piston pressure gauge are described below. It is important that the operator acquaints himself with these factors and become accustomed to recognizing their presence. The success of the measurement will depend upon the degree to which control has been maintained, or to the completeness by which corrections were applied for these factors.

- Elastic distortions of the piston and cylinder.
- Effects of gravity on the masses.

원문: Fluke Calibration 2465A 메뉴얼(영문) · 제조사 원문 자료입니다. 사양은 제조사 사정에 따라 변경될 수 있습니다.

TS-TL-FLK-064

we measure, we calibrate, we validate.
㈜테솔 · www.tessol.com TS-TL-FLK-064 16 / 80
KOLAS 국제공인교정기관 · ISO/IEC 17025

- Temperature of the piston and cylinder.
- Buoyant effect of the atmosphere upon the masses.
- Hydraulic and gaseous pressure gradients within the apparatus.

Calculations

For a consolidation of these various corrections, see Appendix A of this manual. Appendix A contains a Pressure Calculation Worksheet (both SI and English units) with instructions. The Pressure Calculation Worksheet will step the user through the necessary corrections as applied to calibrations with a piston pressure gauge.

Measurement of Pressure with the Piston Pressure Gauge

Pressure results from the application of a force onto an area. Numerically, it is the quotient of the force divided by the area onto which it is applied:

$$P = \frac{F}{A}$$

Where:

P	represents the pressure
F	represents the force
A	represents the area

Elastic Distortion of the Cylinder

As the pressure is increased within a piston pressure gauge, the resulting stress produces a temporary and reversible deformation of the cylinder. The net effect is a change in the effective area of the piston-cylinder combination. If the change in the area is a linear function of the applied pressure, the relationship may be described by the equation:

$$A_e = A_0 \left(1 + b_1 P + b_2 P^2\right)$$

Where:

P	is the nominal pressure
A_e	is the effective area at a pressure P
A_0	is the effective area of the piston-cylinder assembly at a reference pressure level
b_1 & b_2	are coefficients of elastic distortion which are determined experimentally.

Gravity

Since pressure is defined as force per unit area, anything that changes the force applied to the piston of a piston pressure gauge also changes the pressure produced by that gauge. Therefore, the effects of gravity on the masses loaded on the piston must be considered. The gravity correction is usually very significant and must be used during calculations to achieve the advertised accuracy of the piston pressure gauge.

Confusion has resulted from the English System of units concerning the terms, mass and weight. The International System of units does not leave room for ambiguity and should be used whenever possible.

It is recognized that some facilities still operate under the English System of units. Therefore, this manual provides calibration data and calculation instructions in both the

원문: Fluke Calibration 2465A 메뉴얼(영문) · 제조사 원문 자료입니다. 사양은 제조사 사정에 따라 변경될 수 있습니다.

English and the International System of units.

Corrections for local gravity can vary by as much as 0.5% thus it is very important to have a reliable value for the local acceleration of gravity. A gravity survey with an uncertainty better than 0.00001 m/s^2 is recommended.

Buoyant Effect of the Air

According to Archimedes's principle, the weight of a body in a fluid is diminished by an amount equal to the weight of the fluid displaced. The weight of an object (in air) that has had its mass corrected for the effects of local gravity is actually less than that corrected value indicates. This reduction in weight is equal to the weight of the quantity of air displaced by the object, or the volume of an object multiplied by the density of the air. But the volume of an irregular shaped object is difficult to compute from direct measurement. Buoyancy corrections are usually made by using the density of the material from which the object is made. If the value of mass is reported in units of apparent mass vs. brass standards rather than of true mass, the density of the brass standards must be used. Apparent mass is described as the value the mass appears to have, as determined in air having a density of 0.0012 g/cm³, against brass standards of a density of 8.4 g/cm³, whose coefficient of cubical expansion is 5.4 x 10^{-5}/ºC, and whose value is based on true mass in value (see reference 4).

Although the trend is swinging toward the use of true mass in favor of apparent mass, there is a small advantage in the use of the latter. When making calculations for air buoyancy from values of apparent mass, it is unnecessary to know the density of the mass. If objects of different densities are included in the calculation, it is not necessary to distinguish the difference in the calculations. This advantage is obtained at a small sacrifice in accuracy and is probably not justified when considering the confusion that is likely to occur if it becomes necessary to alternate in the use of the two systems.

A satisfactory approximation of the force on a piston that is produced by the load is given by:

$$F = M_A \left(1 - \frac{\rho_{air}}{\rho_{brass}}\right) g$$

Where:

F	is the force on the piston
M_A	is the mass of the load, reported as "apparent mass vs. brass standards"
ρ_{air}	is the density of the air
ρ_{brass}	is the density of brass (8.4 g/cm³)
g	is the acceleration due to local gravity

원문: Fluke Calibration 2465A 메뉴얼(영문) · 제조사 원문 자료입니다. 사양은 제조사 사정에 따라 변경될 수 있습니다.

Temperature

Piston pressure gauges are temperature sensitive and must, therefore, be corrected to a common temperature datum.

Variations in the indicated pressure resulting from changes in temperature arise from the change in effective area of the piston due to expansion or contractions caused by temperature changes. The solution is a straightforward application of the thermal coefficients of the materials of the piston and cylinder. The area corresponding to the new temperature may be found by substituting the difference in working temperature from the reference temperature and the thermal coefficient of area expansion in the relation as follows:

$$A_{0(t)} = A_{0(r)}\left[1 + c\left(t - r\right)\right]$$

Where:

$A_{o(t)}$	is the effective area at temperature, t
$A_{o(r)}$	is the effective area at zero pressure and reference temperature, r
c	is the coefficient of thermal expansion

Reference Plane of Measurements

The measurement of pressure is linked to gravitational effects on the pressure medium. Whether in a system containing a gas or a liquid, gravitational forces produce vertical pressure gradients that are significant and must be evaluated. Fluid pressure gradients and buoyant forces on the piston of a pressure balance require the assignment of a definite position at which the relation P = F/A exits.

It is common practice to associate this position directly with the piston as the datum to which all measurements made with the piston are referenced. It is called the reference plane of measurement, and its location is determined from the dimensions of the piston. If the submerged portion of the piston is of uniform cross section, the reference plane is found to lie conveniently at the lower extremity as shown in Figure 2-4. If, however, the portion of the piston submerged is not uniform, the reference plane is chosen at a point where the piston, with its volume unchanged, would terminate if its diameter were uniform.

The reference plane of the standard is the effective bottom of the measurement piston. This location can be correlated to the index on the mass stack using the L1 dimension (found on Calibration Report for the Piston/Cylinder) and the D Dimension (found on Calibration Report for the Mass set).

원문: Fluke Calibration 2465A 메뉴얼(영문) · 제조사 원문 자료입니다. 사양은 제조사 사정에 따라 변경될 수 있습니다.

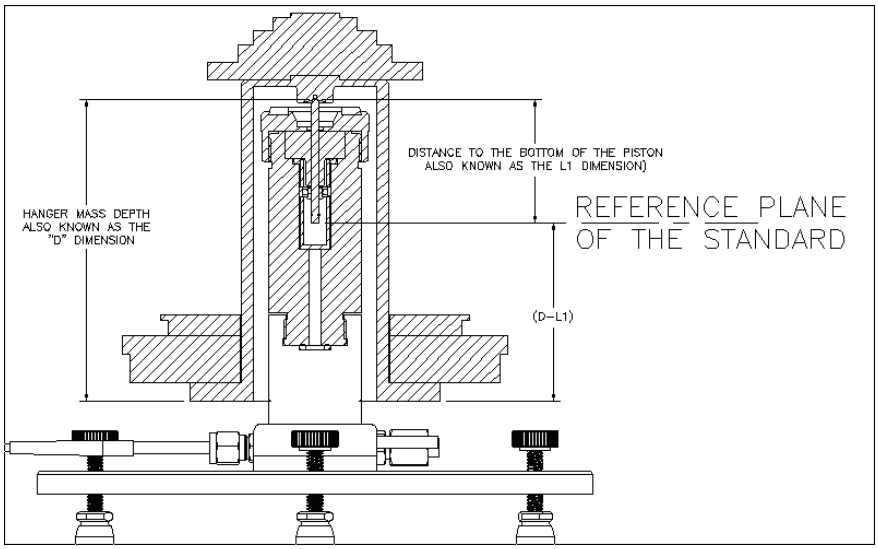

glg02.bmp

Figure 2-4. Reference Plane Determination

When a pressure for the piston pressure gauge is calculated, the value obtained is valid at the reference plane. The pressure at any other plane in the system may be obtained by multiplying the distance of the other plane from the reference plane by the pressure gradient and adding (or subtracting) this value to that observed at the piston reference plane.

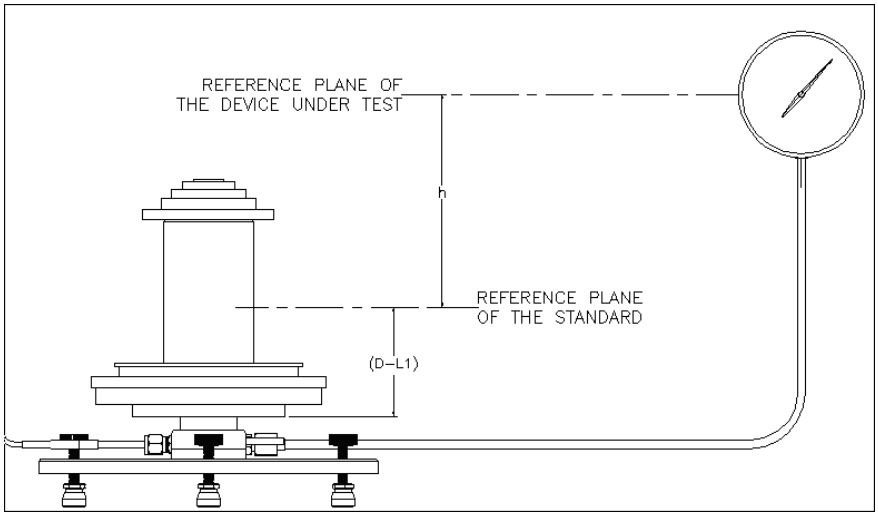

glg03.bmp

Figure 2-5. Head Correction Measurement

원문: Fluke Calibration 2465A 메뉴얼(영문) · 제조사 원문 자료입니다. 사양은 제조사 사정에 따라 변경될 수 있습니다.

$$P_H = (P_m - P_{air}) * h * g$$

Where:

h	is the vertical distance between the reference plane of the Standard and the reference plane of the DUT (Device Under Test)
P_{air}	is the density of the air
P_m	is the density of the test media
g	is the acceleration due to local gravity
L1	is the vertical distance from the mass loading location to the effective bottom of the piston.
D	is the vertical distance from the mass loading location to the bottom of the Hanger Mass

Note

For instances where the reference plane of the DUT is LOWER than the reference plane of the standard, the h is a negative number and therefore P_H becomes a negative number.

In addition, gas lubricated piston pressure gauge calculations should account for the fact that the pressure gradient mentioned in the preceding paragraph changes as system pressure is changed. This is because the specific gravity of gas varies as a function of pressure, not remaining approximately constant, as does a hydraulic fluid.

For good work, a piston pressure gauge should be provided with an index mark for associating the reference of the piston with other planes of interest within a system. The design of this index will vary with the design and manufacture of the instrument, it may be in the form or an index rod with scribed lines on it, an index groove on the column of the instrument, or, other type of fixed indicator. Not only does the mark serve to establish fixed values of pressure differences through a system, it indicates a position of the piston with respect to the cylinder at which calibration and subsequent use should be conducted. If the piston is tapered, it is important to maintain a uniform float position for both calibration and use. This Position is referred to as the “Mid-Float” position as it represents the middle of the calibrated range of the Piston/Cylinder.

In normal operation, the system is pressurized until the piston is in a floating position slightly above the index mark. After a period of time, the piston and its load will sink to the line at which time the conditions within the system are stable. If there is a question as to the error that may be produced by accepting a float position that is too high or too low, the error will be equivalent to a fluid head of the same height as the error in the float position. This statement assumes that the piston is uniform in area over this length.

Crossfloating

It was mentioned earlier that some piston pressure gauges must be calibrated against a standard gauge. In the jargon of the laboratory, this process is called crossfloating. When crossfloating one gauge against another, the two are connected together and brought to a common balance at various pressures. The balancing operation is identical with that employed on an equal-arm balance where the mass of one object is compared to another. In each instance the operator must decide when the balance is complete. In a crossfloat, the two gauges are considered to be in balance when the sink rate of each is normal for that particular pressure. At this condition there is no pressure drop in the connecting line, and consequently no movement of the pressure medium. The condition can be difficult to recognize, particularly if there is no means of amplification in the method of observing. The precision of the comparison will depend directly upon the ability of the operator to judge the degree to which the balance is complete. This procedure is repeated for several

원문: Fluke Calibration 2465A 메뉴얼(영문) · 제조사 원문 자료입니다. 사양은 제조사 사정에 따라 변경될 수 있습니다.

pressures, and the values of areas obtained are plotted against the nominal pressure for each point. A least-squares line is fitted to the plots as the best estimate value of the area at any pressure.

There are two accepted methods for determining the balance of the two pressures. First, the sink rates can be observed and graphed using high sensitivity sensors. Second, a sensitive null-pressure transducer can be interposed which will display small pressure differences directly.

When using a suitable amplifying device, the scatter in the plotted areas from a good quality piston gauge should not exceed a few parts per million.

Bibliography

1. Bridgman, P. W., "The Physics of High Pressure", G. Bell & Sons, London, 1952.
2. Cross, J. L., "Reduction of Data for Piston Gauge Pressure Measurements", NBS Monograph 65 (1963).
3. Dadson, R. S., "The Accurate Measurement of High Pressures and the Precise Calibration of Pressure Balances", Proc. Conf. Thermodynamic and Transport Properties of Fluids, London, pp. 32-42, 1957, Institute of Mechanical Engineers.
4. "Design and Test of Standards of Mass", NBS Circular No. 3 (Dec., 1918), Included in NBS Handbook 77, Volume III.
5. Johnson, D.P., J. L. Cross, J. D. Hill, and H.A. Bowman, "Elastic Distortion Error in the Dead Weight Piston Gauge", Ind. Engineering Chem., 40, 2046 (Dec., 1957).
6. Johnson, D. P., and D. H. Newhall, "The Piston Gauge is a Precise Measuring Instrument", Trans. of ASME, April, 1953.
7. Newhall, D. H. and L. H. Abbot, "Controlled-Clearance Piston Gauge", Measurements and Data, Jan.-Feb. 1970.
8. "Pressure Measurement", Measurements & Data Home Study Course, No. 17, Measurements and Data, September-October, 1969.
9. Tate, D. R., “Gravity Measurements and the Standards Laboratory”, National Bureau of Standards Technical Note No. 491 (1969).
10. Heydemann and Welch, Chapter 4, Part 3, "Pure and Applied Chemistry", Butterworths.
11. Kirk K. Mosher, RUSKA Instrument Corporation, "The Traceability Chain of the Piston Pressure Gauge to NIST", presented at the Canadian National Conference of Standards Laboratories, 1991.
12. Ken Kolb, RUSKA Instrument Corporation, "Reduced Uncertainty and Improved Reliability for the Pneumatic Piston Pressure Gauge Through Statistical Process Control" published in the "Proceedings" for the Annual Measurement Science Conference, 1991.

원문: Fluke Calibration 2465A 메뉴얼(영문) · 제조사 원문 자료입니다. 사양은 제조사 사정에 따라 변경될 수 있습니다.

Chapter 3
Description

General Information

The RUSKA 2465A-754 Gas Piston Gauge (see Figure 3-1 and 3-2), is a pneumatic pressure standard designed for the accurate generation and measurement of gas pressures to 1000 psi. This measurement is accomplished in the basic manner of using the fundamental pressure equation *PRESSURE = FORCE / AREA* (see Chapter 2 for more information). The gauge is used as the precision measuring device in the RUSKA Gas Lubricated Piston Pressure Gauge System.

It may be seen from the above general equation that when a known force produced by a known mass is applied to a piston of a known area, a pressure will be produced that may be calculated (see Appendix A for detailed information). The RUSKA gauge is arranged for the application of carefully determined masses on a piston of known area.

The primary feature of the gauge is its ability to accurately reproduce its performance at the lower pressure. The low viscosity of the gas provides excellent lubrication for the close-fitting piston/cylinder assembly. Relative motion between the piston and cylinder is necessary and is obtained by an electric motor which is used to distribute the gas molecules throughout the annulus of the assembly. It is relative absence of friction between piston and cylinder walls that characterizes the performance for which the gauge is so highly respected.

A second feature of the gauge is its ability to measure either absolute pressures or those referenced to the atmosphere. The gauge is equipped with a bell jar which, when placed over the weights, permits reduction of the external reference air pressure to a value of 100 microns Hg (mercury) at 0 ºC.

The nominal range of pressure (interval) over which the gauge is capable of operating is the span from 1.4 kPa (0.2 psi) to 4.8 mPa (1000 psi). This interval is covered by three interchangeable piston/cylinder assemblies having sufficient overlap for establishing continuity of measurement and for making detailed investigations of subintervals within the total range (span).

Some of the most important industrial uses of the gas lubricated piston pressure gauge is that of a standard for calibrating transducers, Bourdon-tube type gauges, manometers, and other dead weight gauges.

원문: Fluke Calibration 2465A 메뉴얼(영문) · 제조사 원문 자료입니다. 사양은 제조사 사정에 따라 변경될 수 있습니다.

Description of the Mass Set

All masses of the Mass Set except sleeve mass, as supplied with this gauge are made of non-magnetic, austenitic (series 300) stainless steel. They are machined from rolled stock or forging, and the removal of any metal is performed in such a way as to maintain balance about the centerline. Final mass adjustment is usually accomplished by drilling a symmetrical pattern of holes concentric with the axis. The sleeve mass is made from two materials. The sleeve top is made from Aluminum 6061-T6 and the sleeve bottom ring is made from Titanium.

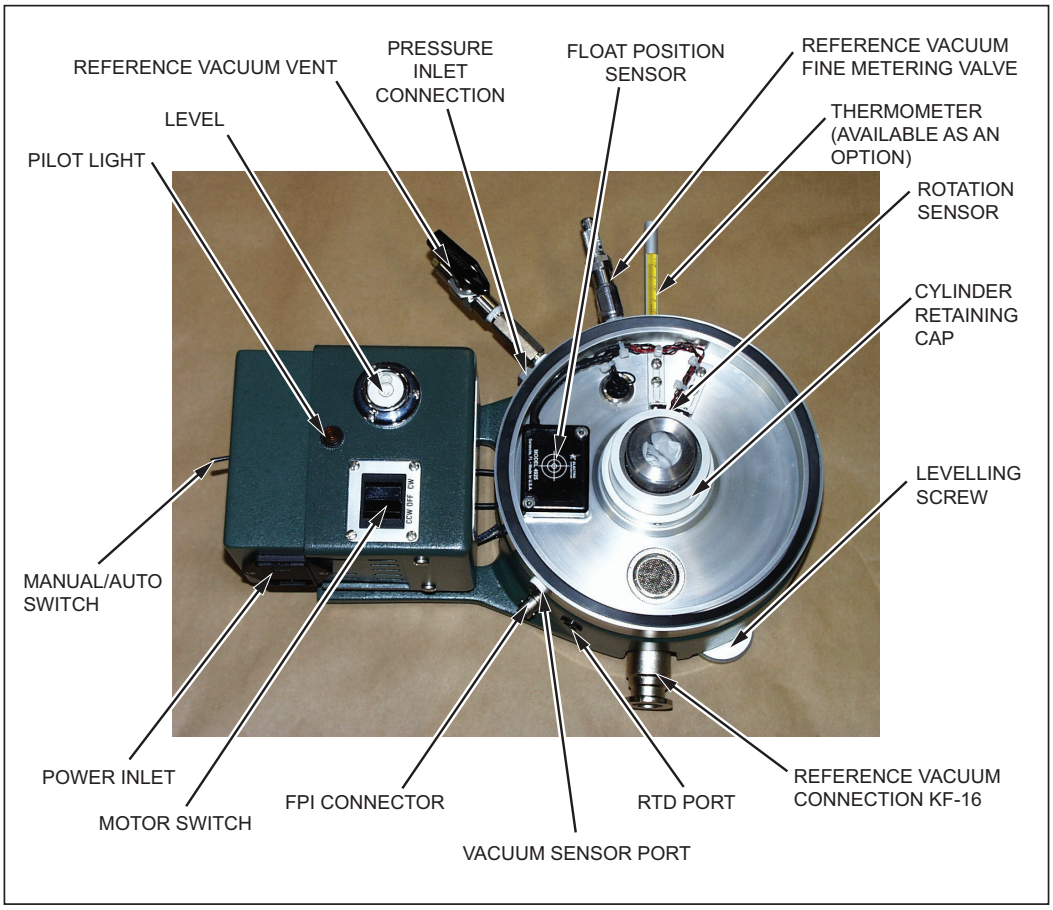

Figure 3-1. Gas Piston Gauge - Top View

원문: Fluke Calibration 2465A 메뉴얼(영문) · 제조사 원문 자료입니다. 사양은 제조사 사정에 따라 변경될 수 있습니다.

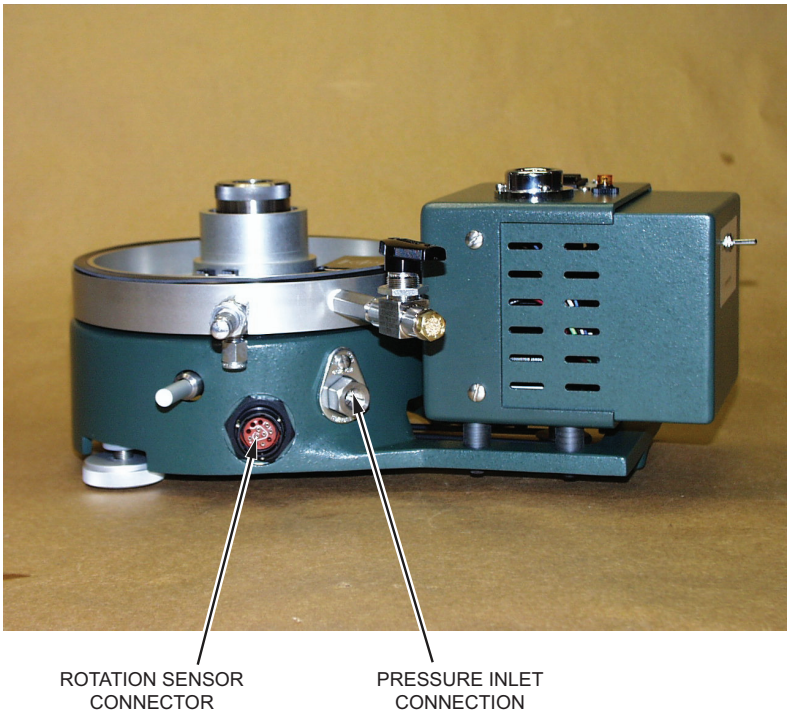

glg05.eps

Figure 3-2. Gas Piston Gauge - Front View

원문: Fluke Calibration 2465A 메뉴얼(영문) · 제조사 원문 자료입니다. 사양은 제조사 사정에 따라 변경될 수 있습니다.

RUSKA 2456A-754
Users Manual

3-4

원문: Fluke Calibration 2465A 메뉴얼(영문) · 제조사 원문 자료입니다. 사양은 제조사 사정에 따라 변경될 수 있습니다.

Chapter 4
Installation

Introduction

Numeric references are to drawing RUSKA 2465A-754, contained in Appendix B.

The gauge should be installed in a room where the temperature is maintained between 18 ºC to 28 ºC. The actual temperature is not as important as the stability in temperature. There should not be excessive personnel traffic and air drafts. Airborne dust is undesirable, but clean-room standards are not required.

Remove the gauge from its shipping box and locate it on a clean, level, sturdy work surface. The surface should be able to support fifty pounds of weight without deflecting and be secure enough to be free from vibration. Level the base by turning the two leveling screws (0003) until the bubble in the level vial is centered.

Refer to plumbing connection diagrams in Appendix B or to instructions in operating manual for pressure controller for proper connections to the gas source and to the test instrument. The motor unit on the Piston Pressure Gauge is designed to operate on either 115 VAC or 230 VAC; 50 or 60 Hz. After determining what the local power line voltage is at the intended location of operation, select either 115 VAC or 230 VAC by the proper positioning of the voltage selector on the side of the motor unit. This feature is located on the power inlet module. With power cords disconnected to both Piston Pressure Gauge and wall outlet, use a small screwdriver to pry open the voltage select/fuse compartment on the power inlet module. Place two fuses of the correct value, depending on local power supply conditions, into their fuse holders inside the power inlet module. Remove the voltage select wheel and turn it so that when it is replaced into the fuse compartment and the door is snapped shut, the correct voltage is displayed through the window. Plug the unit into a grounded 115 VAC or 230 VAC; 50 or 60 Hz power outlet capable of handling 15 watts of power using a proper power cord suitable to the voltage.

⚠ Caution

DO NOT attempt to turn the voltage select wheel while it is still in place within the fuse compartment. Always remove it first from the compartment and then replace it. Turning the wheel while in place may damage the electrical contacts.

If the gauge is being used with an electronic thermometer, insert the probe into the hole on the back left side of the base. A small amount of heat sink compound on the tip of the probe will shorten the response time of the temperature sensor.

원문: Fluke Calibration 2465A 메뉴얼(영문) · 제조사 원문 자료입니다. 사양은 제조사 사정에 따라 변경될 수 있습니다.

If the optional thermometer has been purchased, screw it into the 1/4 NPT hole in the right hand side of the 2465-12 Assembly. The graduated end of the thermometer will protrude through the hole in the right hand side of the base casting. Here too, a small amount of heat sink compound applied to the bulb of the thermometer will shorten the response time of the thermometer.

⚠ Caution

Always remove the thermometer before shipping the gauge base.

4-2

원문: Fluke Calibration 2465A 메뉴얼(영문) · 제조사 원문 자료입니다. 사양은 제조사 사정에 따라 변경될 수 있습니다.

Chapter 5
Operation

Precautions

1. Do not over pressure the piston
2. Do not increase or decrease the pressure in the gauge rapidly. Always use a metering valve for flow control. If possible, hold a hand lightly on the weights to protect the piston from injury. The maximum rate is 0.7 MPa (100 psi) per minute.
3. Before operation, be sure the retaining ring of the high pressure piston is securely in place.
4. Do not operate the gauge with a dirty or sticky piston.
5. Do not rotate the pistons against the upper or lower stop longer than necessary because the bearings, of necessity are not lubricated.
6. Because of extremely small tolerances between mating parts, every effort should be made to insure careful handling of gauge parts. All parts, especially those concerned with the piston and cylinder, should be kept scrupulously clean. Acid from finger prints can etch a piston or cylinder. Handle piston and cylinder using cotton gloves on the hands to prevent acid etching of piston and cylinder walls.
7. Pistons and cylinders are matched assemblies. Each piston will operate properly only in its particular cylinder.
8. Any sound which indicates metal-to-metal contact between the piston and cylinder is a signal for the operator to stop the gauge immediately. Failure to do so may cause damage to the piston and/or cylinder.
9. Always give the serial number of the instrument when ordering replacement parts.
10. The circular weight-loading table of the Low Range Piston must never be permitted to enter the bore of the mating cylinder. The assembly must always be handled as described in Chapter 6, Piston/Cylinder Cleaning Instructions. Precautions must always be taken to prevent uninformed and inexperienced persons from carelessly picking up this assembly for inspection.
11. The Low Range Piston/Cylinder (2460-5) must always be assembled in the cylinder housing with the O-Ring relief on the cylinder in the downward position. See Figure 5-6.

원문: Fluke Calibration 2465A 메뉴얼(영문) · 제조사 원문 자료입니다. 사양은 제조사 사정에 따라 변경될 수 있습니다.

General

The cross-section drawing 2465-12 found in Appendix B will aid in identifying and assembling the following parts. The Filter (24-580), the Filter Retainer (2460-4-27), and the O-Ring (54-703-119) are placed in the Cylinder Housing (2460-65) in order listed. The O-Ring should be lightly lubricated with Dupont Krytox 240 AA Grease (45-339) before installation. All excess lubricant should be wiped off, leaving only a slight film. These parts are used in the gauge regardless of which piston is being used.

Low Range Piston Assembly

Refer to Figures 5-1, 5-2 and also to drawing 2465-725 in Appendix B.

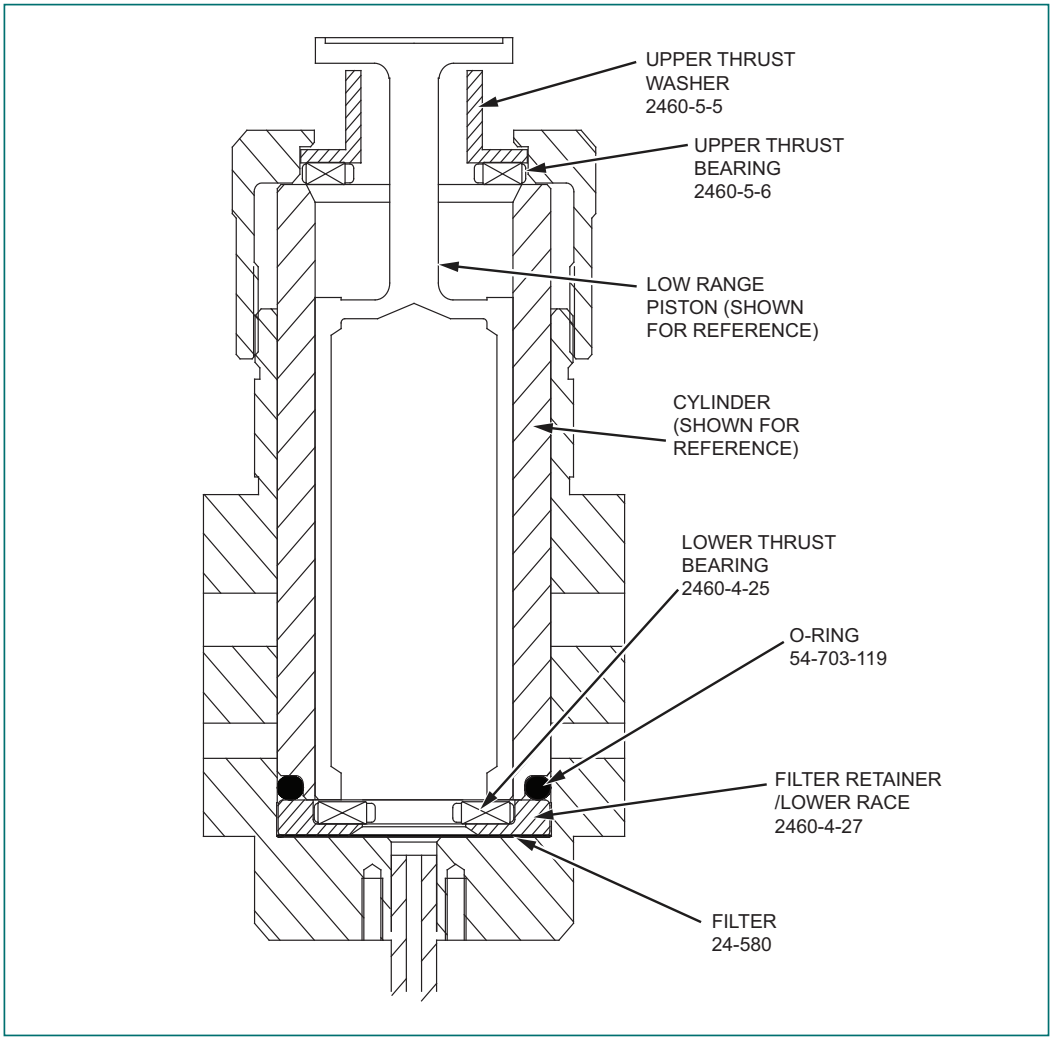

Figure 5-1. Stackup for Piston Operation

원문: Fluke Calibration 2465A 메뉴얼(영문) · 제조사 원문 자료입니다. 사양은 제조사 사정에 따라 변경될 수 있습니다.

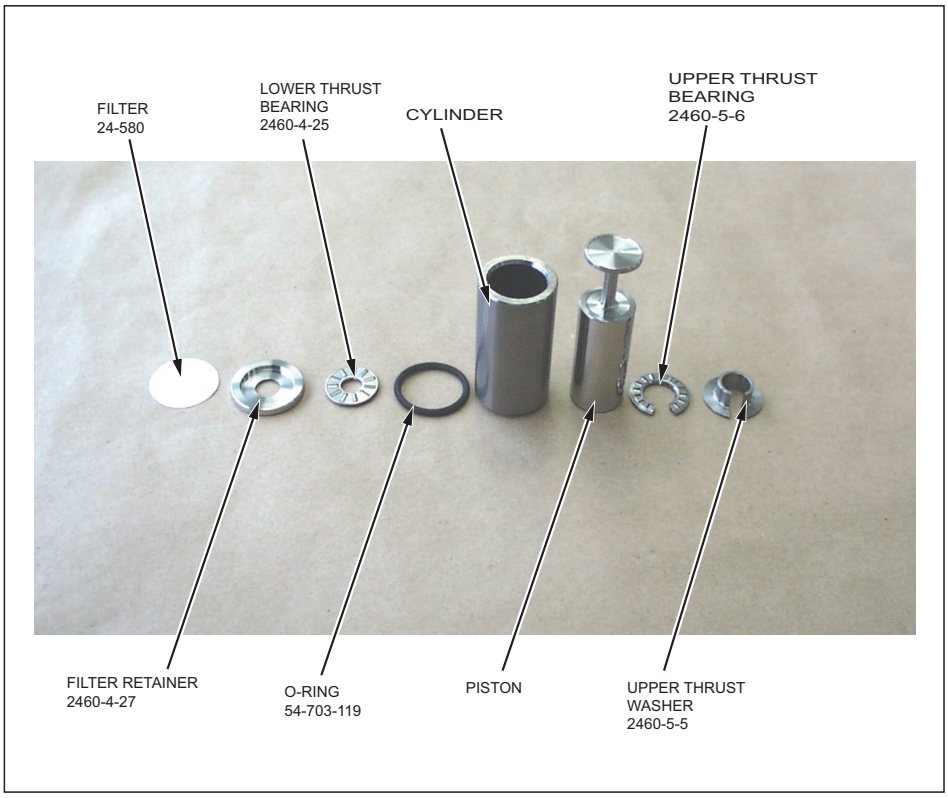

glg07.eps

Figure 5-2. Parts Required For Low Range Piston Operation

If the Low Range Piston Assembly is to be used, the lower thrust bearing (2460-4-25) is required. If the filter (24-580) and filter retainer (2460-4-27) are already in the base, simply drop the lower thrust bearing into the recess at the top of the filter retainer (see Figure 5-1). The O-Ring (54-703-119) rests on top of the filter retainer and seals against the bottom of the cylinder. The lower thrust bearing must be in the gauge when the Low Range Piston is being used. The lower thrust bearing can be left in place while the High Range Piston or 35 BAR Piston are being used.

⚠ Caution

When handling the Low Range Piston and Cylinder Assembly, do not allow the weight loading table to enter the cylinder bore. When handling the assembly, maintain a firm grasp on the weight loading table until the assembly is in the housing. See 5-3, 5-4 and 5-5 for proper handling of the Low Range Piston and Cylinder.

원문: Fluke Calibration 2465A 메뉴얼(영문) · 제조사 원문 자료입니다. 사양은 제조사 사정에 따라 변경될 수 있습니다.

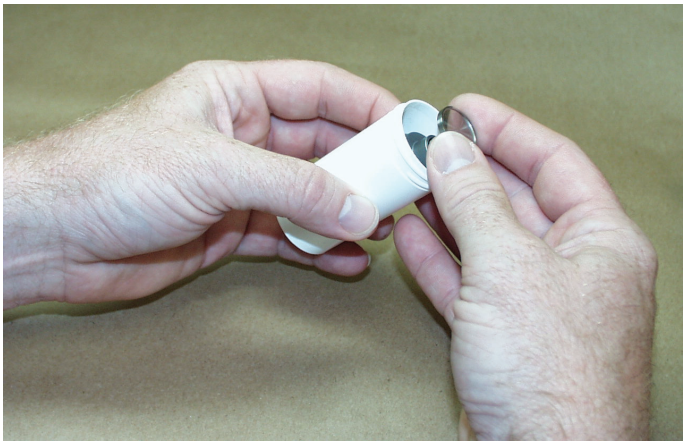

glg08.eps

Figure 5-3. Removing Low Range Piston and Cylinder from Container - Step 1

glg09.eps

Figure 5-4. Removing Low Range Piston and Cylinder from Container - Step 2

원문: Fluke Calibration 2465A 메뉴얼(영문) · 제조사 원문 자료입니다. 사양은 제조사 사정에 따라 변경될 수 있습니다.

glg10.eps

Figure 5-5. Handling the Low Range Piston and Cylinder

The Low Range Cylinder (2460-5-1) and Low Range Piston Assembly (2460-55) should then be placed in the gauge after being cleaned according to the instructions in Chapter 6. See Figure 5-6.

⚠ Caution

The O-Ring groove on the cylinder should be in the downward position when the cylinder is placed in the gauge.

glg11.eps

Figure 5-6. Low Range Piston and Cylinder Showing O-Ring Groove

When screwing the Retaining Cap (2460-4-7) onto the cylinder, a slight upward force may be necessary on the piston to properly seat the Piston Retainer (2460-5-5) into the inner recess of the Retaining Cap. See Figure 5-7.

원문: Fluke Calibration 2465A 메뉴얼(영문) · 제조사 원문 자료입니다. 사양은 제조사 사정에 따라 변경될 수 있습니다.

glg12.eps

Figure 5-7. Positioning the Upper Thrust Washer/Piston Retainer in the Cylinder Retaining Cap Recess

Mid Range Piston Assembly

Refer to Figures 5-8 , 5-9, 5-10 and also to drawing 2465-727 in Appendix B.

1. If the Mid Range Piston Assembly is to be used, the Lower Thrust Bearing (2460-4-25) mentioned in the preceding section must be left in the gauge with the Filter, Filter Retainer, and O-Ring.
2. Next, insert the Lower Cylinder Spacer, O-Ring, and the piston and cylinder after they have been cleaned according to the instructions in Chapter 6, Piston/Cylinder Cleaning Instructions.
3. The O-Rings should be lubricated with Dupont Krytox 240 AA Grease (45-339) before installation. All excess lubricant should be wiped off, leaving only a slight film.
4. Place the Cylinder Retainer (2460-70-2) over the cylinder.
5. Insert the Hex Wrench (94-608) into the hole in the side of the housing.
6. Place the Cylinder Retaining Cap (2460-4-7) onto the housing.
7. Tighten this cap securely by hand.

The gauge is now ready for operation.

원문: Fluke Calibration 2465A 메뉴얼(영문) · 제조사 원문 자료입니다. 사양은 제조사 사정에 따라 변경될 수 있습니다.

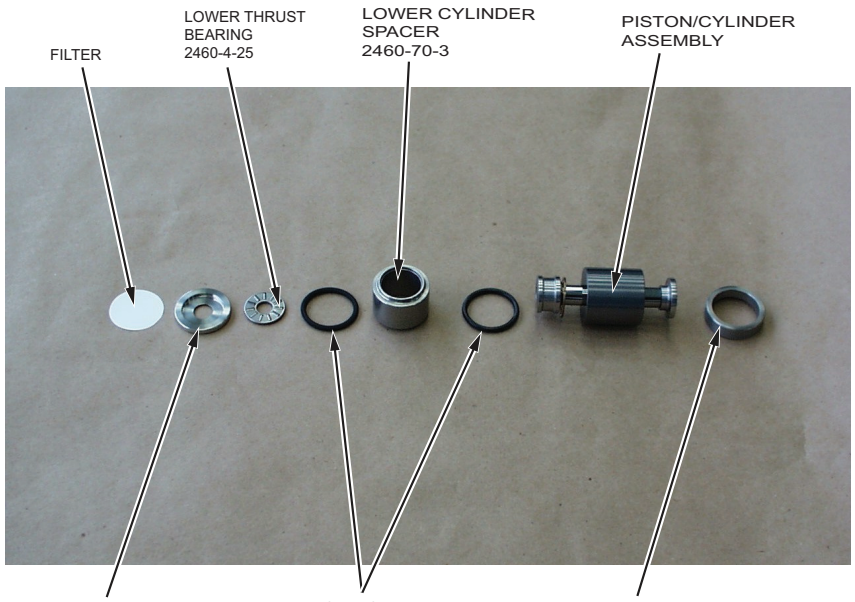

glg13.eps

Figure 5-8. Parts Required for Operation of the Mid Range Piston/Cylinder

glg14.eps

Figure 5-9. Mid Range Piston/Cylinder Assembly

원문: Fluke Calibration 2465A 메뉴얼(영문) · 제조사 원문 자료입니다. 사양은 제조사 사정에 따라 변경될 수 있습니다.

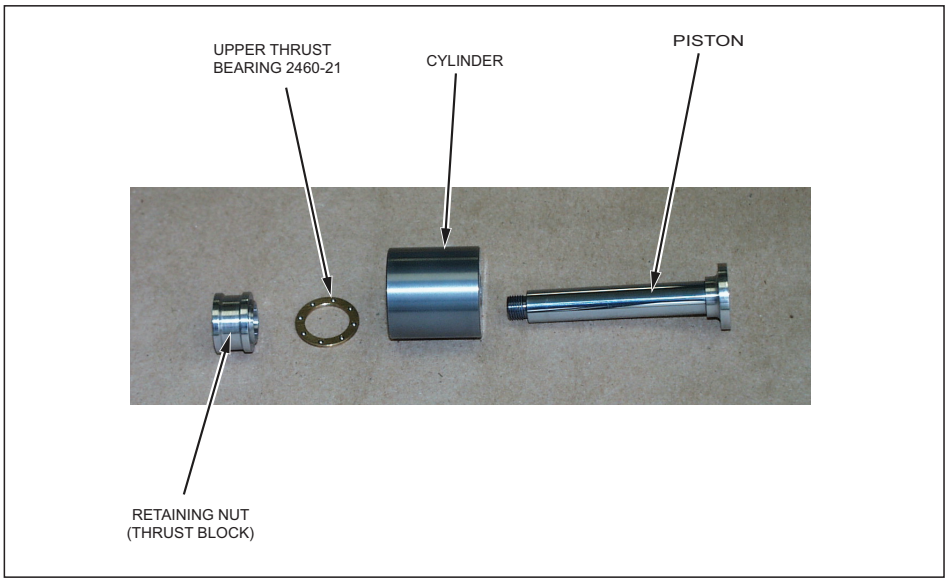

glg15.eps

Figure 5-10. Retaining Nut and Bearing

35 Bar Assembly

Refer to Figure 5-11 and also to drawing 2465-730A in Appendix B.

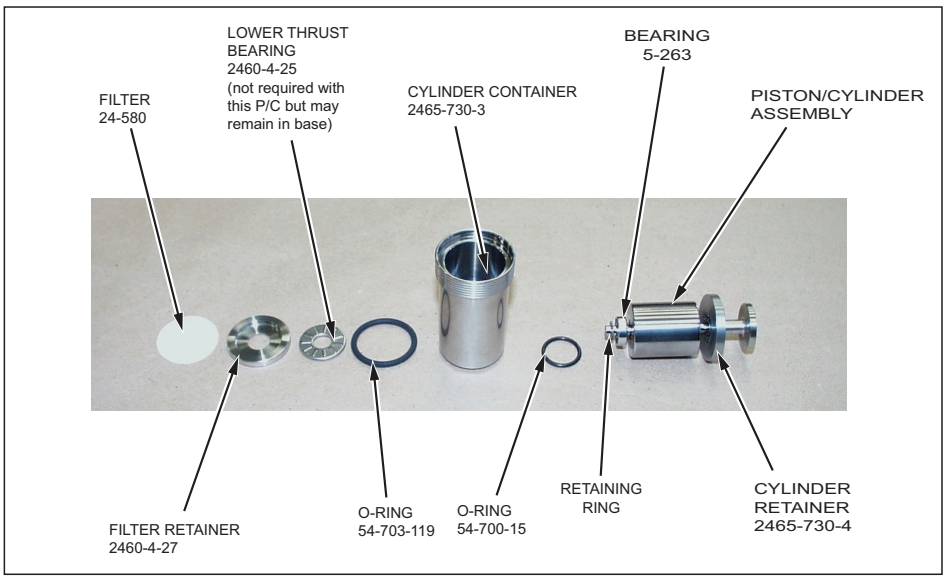

glg17.eps

Figure 5-11. Parts Required for Operation of the 35 Bar P/C

If the 35 BAR Piston Assembly is to be used, the Thrust Washer and the Lower Thrust Bearing mentioned in the Chapter 5, Lower Range Piston Assembly, can be left in the gauge.

The Piston and Cylinder can be installed as follows.

1. The Filter, Filter Retainer, and O-Ring should be in the gauge as they were in Chapter 5, General.

원문: Fluke Calibration 2465A 메뉴얼(영문) · 제조사 원문 자료입니다. 사양은 제조사 사정에 따라 변경될 수 있습니다.

Next, assemble the Piston & Cylinder as follows.

2. All O-Rings should be lubricated with DuPont Krytox 240 AA Grease (45-339) before installation. All excess lubricant should be wiped off, leaving only a slight film.
3. Install the O-Ring (54-700-15) into the cylinder container (2465-730-3).
4. Slide the piston through the Cylinder retainer (2465-730-4).
5. Insert the piston into the cylinder taking care to assure the cylinder is upright. The cylinder has been etched with the word “top” to designate the proper orientation.
6. Slide the roller bearing (5-263) onto the lower portion of the piston.
7. Install the snap ring (68-754) into the groove on the piston. Use the tool (2-776) to facilitate this.
8. Gently slide the P/C assembly into the Cylinder retainer.
9. Slide the whole assembly into the gauge base.
10. Insert the Hex Wrench (94-608) into the hole in the side of the housing.
11. Place the Retaining Cap (2460-4-7) onto the cylinder housing.
12. Tighten the cap securely by hand.

The gauge is now ready for operation.

High Range Piston Assembly

Refer to Figure 5-12 and also to drawing 2465-729 in Appendix B.

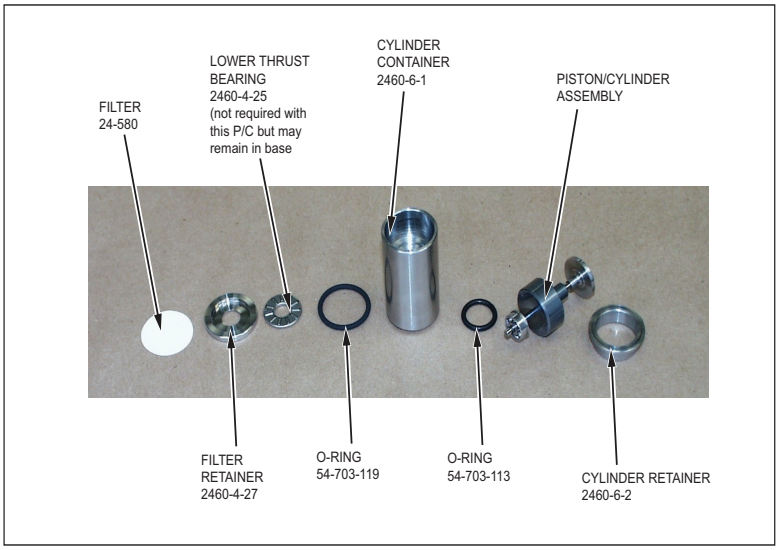

glg16.eps

Figure 5-12. Parts Required for High Range Piston Operation

If the High Range Piston Assembly is to be used, the Thrust Washer and the Lower Thrust Bearing mentioned in the Chapter 5, Low Range Piston Assembly, can be left in the gauge.

원문: Fluke Calibration 2465A 메뉴얼(영문) · 제조사 원문 자료입니다. 사양은 제조사 사정에 따라 변경될 수 있습니다.

The High Range Piston and Cylinder can be installed as follows.

1. The Filter, Filter Retainer, and O-Ring should be in the gauge, as they were in Chapter 5, General.
2. Next, insert the Cylinder Container (2460-6-1) and the piston and cylinder after they have been cleaned in accordance with the cleaning instructions in Chapter 6, Piston/Cylinder Cleaning Instructions, being certain that the O-Ring (54-703-113) is inserted in the Cylinder Container.
3. The O-Ring should be lubricated with DuPont Krytox 240 AA Grease (45-339) before installation. All excess lubricant should be wiped off, leaving only a slight film.
4. Place the Cylinder Retainer (2460-6-2) over the cylinder.
5. Insert the Hex Wrench (94-608) into the hole in the side of the housing.
6. Place the Retaining Cap (2460-4-7) onto the cylinder housing.
7. Tighten the cap securely by hand.

The gauge is now ready for operation.

When working at high pressures (over 100 psi), or after reducing a high pressure to a lower pressure, the high range piston can sometimes seem sticky even if it is clean. Rotating the cylinder with the motor while gently bouncing the weights up and down usually frees the piston in a minute or so. However, if the piston is actually dirty, no amount of rotating or bouncing will make it perform properly. In that case the piston and cylinder must be cleaned.

Establishing Gauge Pressures

Gauge Pressures

Pressure should be admitted slowly into the gauge, preferably through a metering valve. It is very convenient to have a pressure adjusting pump such as RUSKA 2465A-800 Manual Pressure Controller to adjust the system pressure. When the piston is floating (suspended on a gas cushion between piston stops) and not oscillating and the system is at equilibrium, a reading may be taken.

When there are enough weights on the piston, the weights can be rotated slowly by hand opposite of the rotation of the cylinder. The weights will rotate against the cylinder rotation for sometime before they begin to rotate with the cylinder. When the weights begin to rotate with the cylinder, they can again be rotated by hand in the opposite direction. This allows the operator to observe any irregularities in the motion of the piston. For example, if the piston and weights quickly begin to rotate with the cylinder, a dirty piston and cylinder is indicated. Chapter 6 of this manual, Piston/Cylinder Cleaning Instructions, includes detailed information for piston cleanliness checks. It is suggested that the motor be used only when necessary. After the weights have acquired some momentum, the motor may be turned off and the weights permitted to continue their rotation. With this practice, the piston is less likely to be operated when dirty and there will be less heat generated in the instrument from that dissipated by the motor.

원문: Fluke Calibration 2465A 메뉴얼(영문) · 제조사 원문 자료입니다. 사양은 제조사 사정에 따라 변경될 수 있습니다.

A thermometer well is provided on the right hand side of the gage base. If a glass thermometer is preferred, one is available as an accessory under part number 2465-6.A PRT (RTD) well is provided on the back left side of the gauge base. Either of these methods may be used to determine gauge temperature. Pressure corrections for temperature changes can be made according to the methods outlined in Appendix A.

Leaks in the pressure system that is used with the gauge cannot be tolerated. Small leaks cause rapid piston fall rates and can create an error in the measured pressure. Every effort should be made to insure a leak-free system.

Maintenance of the Gauge

Reference drawing 2465-12 in Appendix B.

Although the piston pressure gauge is not a complex instrument, certain maintenance procedures should be followed to insure trouble-free performance.

The O-Rings (54-703-006) on the Vacuum Seal Assembly (2465-14) and the Cylinder Housing Assembly (2460-65) have proved to be reliable and leak free. The O-Rings should be lubricated with DuPont Krytox 240 AA Grease (45-339) after every six weeks of operation. Replace the O-Rings if leakage occurs in the gauge.

1. To lubricate and replace the O-Ring Rotary Seal on the Cylinder Housing, remove the two Shoulder Screws (71-103) and pull the entire O-Ring holder from the gauge body.
2. Unscrew the Packing Nut (2460-4-15) and lubricate and replace the O-Ring.
3. Install the O-Ring by reversing the above steps. Refer to the drawings in Appendix A.
4. To lubricate and replace the drive gear shaft O-Ring seal or to lubricate the drive gears, remove the two hex head screws that hold the Gear Support (2460-4-19) in the gauge body.
5. Loosen the screw that holds the Hub Clamp (13-485) on the drive gear shaft and remove the Hub Clamp. The drive gear shaft with the drive gear (permanently attached) can then be pulled from the Gear Support.
6. After removing the Ball Bearings (5-144), the Vacuum Seal (2465-14) can be pushed out of the Gear Support.
7. Unscrew the Packing Nut and lubricate or replace the O-Ring. Before replacing this unit in the gauge, the drive gears should be lubricated with a mixture of Dupont Krytox 240 AA Grease (45-339) and molybdenum disulfide.
8. The Vacuum Seal (2460-14), Packing Nut and O-Rings need not be installed in the Gear Support (2460-4-19) unless a vacuum reference pressure is being used for absolute pressure measurements.
9. The Ball Bearings (5-144) should be cleaned and lubricated with one drop of DuPont Krytox 143 AZ Fluorinated Oil whenever the gauge is disassembled.

⚠ Caution

Do NOT lubricate the lower thrust bearing (2460-4-25) or the upper thrust bearing (2460-5-6). See Drawing Number 2465-725 in Appendix B. If either of these bearings is dirty or oily, clean them before using. To clean these bearings, rinse them with a solvent such as acetone or high grade alcohol. Dry them thoroughly before installing them.

원문: Fluke Calibration 2465A 메뉴얼(영문) · 제조사 원문 자료입니다. 사양은 제조사 사정에 따라 변경될 수 있습니다.

Should it ever become necessary to replace the power fuses, the fuse holders are located in the power-in receptacle on the side of the Motor Case Assembly (2465-15). These fuse holders are located inside the cavity above the three power receptacle prongs.

1. Disconnect the power cord from the wall power receptacle and from the Piston Pressure Gauge's power-in receptacle.
2. Use a small flat blade screwdriver to pry the voltage select/fuse holder compartment door out from the power-in receptacle. Both the fuses should be checked and replaced if necessary with fuses of the correct value depending on 115 VAC or 230 VAC local power supply conditions.
3. Replace fuses only with the 3AG Slo-blo 1/4 Amp fuse (part #26-222). To replace the fuse holders, simply push them back into the receptacle so that they snap back into place.
4. Close the compartment door, making sure that the correct voltage is showing through the small window.
5. If the correct voltage is not displayed through the window, pry open the door again. Remove the voltage select wheel, turn it to the correct value, and replace it within the fuse compartment.
6. Close the door until it snaps back into place.

원문: Fluke Calibration 2465A 메뉴얼(영문) · 제조사 원문 자료입니다. 사양은 제조사 사정에 따라 변경될 수 있습니다.

Chapter 6
Piston/Cylinder Cleaning Instructions

General Information and Preparation

When it is necessary to clean the Piston/Cylinder Assembly, the Piston Pressure Gauge must be partially disassembled and some of the components set aside until later. Upon removal of the internal components, a degree of risk is involved because of the possibility of exposing the parts to harmful dirt, corrosive fingerprints, and being dropped to the table or floor. The small, carbide measuring piston will not likely survive an accidental drop. The remainder of the components, if dropped, may also be damaged to the extent of sustaining raised burrs and may no longer be useable.

Each manual operation that is performed on a mechanical device is accompanied by a finite degree of damage. The damage, however small it may be for the individual operations, is cumulative. It results from the imperfect execution of each manual operation. After a given length of time, the device may be expected to fail because of performance deterioration beyond the level of tolerance. It is important, therefore, to perform the manual operations with the greatest possible skill in order to keep the harmful side effects at a minimum.

There are two types of contamination that affect not only the performance of a piston pressure gauge but also the mechanical state of the critical components. One contaminant is the ordinary hard particle of matter that scratches and abrades the finely-finished surfaces as it becomes entrapped between the close-fitting members. The scratches invariably result in raised edges from the displacement of the metal and spoil the original relationship of the members. The second type of contaminant is of a chemical nature and produces harmful effects by attacking the finished metallic surfaces in a corrosive manner. Ordinary fingerprints contain water-soluble, acidic salts, having extremely high corrosive activity with the metals of the critical instrument parts. Since these parts must necessarily be handled in making a piston exchange, they may be protected from exposure to both types of contaminants by the use of clean paper wipers.

There are a number of industrial paper wipers such as Kimwipes available that are relatively free of lint. After a little practice, the corrosion-sensitive parts may be safely handled with these wipers instead of with the bare fingers. Even when using the wipers as insulators, the hands should first be washed and thoroughly dried before beginning the disassembly.

The space allotted to the discussion of cleanliness is not intended to imply to the technician the impossibility of performing the job correctly, but rather to give reassurance that the results will be quite satisfactory if one follows common-sense procedures of eliminating contaminations by use of proper techniques.

원문: Fluke Calibration 2465A 메뉴얼(영문) · 제조사 원문 자료입니다. 사양은 제조사 사정에 따라 변경될 수 있습니다.

Being forewarned of the hazards, the technician should wipe the bench and all instrument surfaces in the vicinity of the Piston Pressure Gauge before starting disassembly operations. A wad of Kim-Wipes slightly wetted with a solvent, such as high grade alcohol or acetone will help pick up particles that invariably accumulate near the gauge.

A clean space should be prepared on a work bench. Cover this space with paper towels so that cleaned parts will not be contaminated.

REMOVE ALL PRESSURE FROM THE PISTON PRESSURE GAUGE BY VENTING THE PRESSURE HOUSING TO THE ATMOSPHERE.

Unscrew the knurled retaining cap from the top of the housing and lay it aside on a clean Kimwipe.

Functional Testing of Piston/Cylinder Assemblies

The piston/cylinder assembly should be tested for cleanliness and proper operation before and after each use. Perform the following steps to test for proper operation and to show that the assembly is clean.

1. Install the piston/cylinder assembly into the DWG base and secure the retaining cap.
2. Pressure the base until the piston alone is floating near mid-stroke.
3. With a gentle stroke of the finger, rotate the piston while also causing it to bounce in the cylinder. After a few strokes allow the piston to coast on its own. Although the rotation of the mid and high ranges may be lengthy, the free rotation of the low range may last only a brief few seconds. At any rate, all ranges should rotate freely with no sudden changes in rotation speed and should coast to a gradual stop. The last bit of rotation just before stopping is often the most useful in judging if the piston is functioning correctly.
4. If the piston does not perform as indicated above, it should be cleaned and retested. If the subsequent cleaning does not improve the results, the assembly may be damaged and should not be used until a qualified inspection is made as to the source of the failure.

Cleaning the Low Range Piston/Cylinder Assembly

Cleaning supplies (refer to Figure 6-1) consist of:

- Solvent, such as high grade alcohol or acetone
- Low-lint paper wipers, such as Kimberly Clark, Kimwipes number 34155
- Cleaning tool number 2460-56
- Wooden applicator sticks, such as Puritan number 807-12
- Cashmere Bouquet brand hand soap
- Bottle brush, such as RUSKA part number 7-682
- Size 0 rubber stopper, such as RUSKA part number 81-536
- Warm tap water

원문: Fluke Calibration 2465A 메뉴얼(영문) · 제조사 원문 자료입니다. 사양은 제조사 사정에 따라 변경될 수 있습니다.

glg18.eps

Figure 6-1. Materials for Cleaning the Low Range Piston/Cylinder

Prepare a clean work area near a running tap water source. Prepare several sets of folded wipers as shown in Figures 6-2, 6-3 and 6-4.

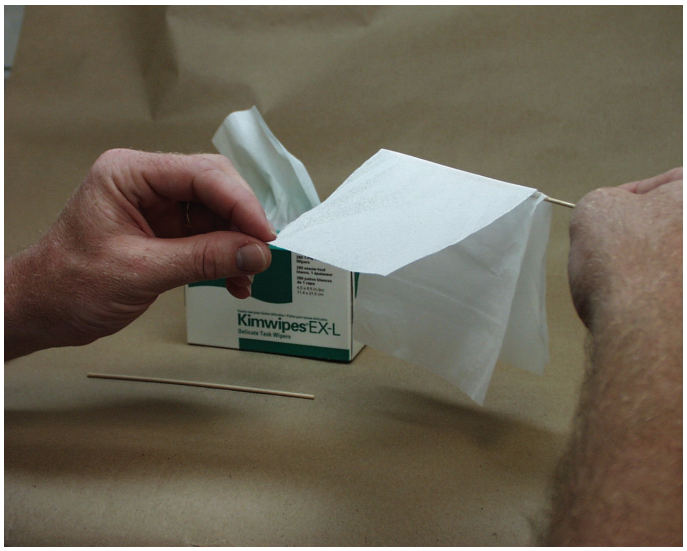

glg19.eps

Figure 6-2. Preparations for Cleaning the Low Range Cylinder - Step 1

원문: Fluke Calibration 2465A 메뉴얼(영문) · 제조사 원문 자료입니다. 사양은 제조사 사정에 따라 변경될 수 있습니다.

glg20.eps

Figure 6-3. Preparing the Kimwipes - Step 2

glg21.eps

Figure 6-4. Preparing the Kimwipes - Step 3

원문: Fluke Calibration 2465A 메뉴얼(영문) · 제조사 원문 자료입니다. 사양은 제조사 사정에 따라 변경될 수 있습니다.

Two wipers can be folded together for wiping the outside of the piston and cylinder. A single folded wiper can be inserted into, then wrapped around, the cleaning tool for cleaning the bore of the cylinder. See Figures 6-5 and 6-6.

1. Disassemble the piston/cylinder assembly.
2. Pre-clean the piston and cylinder using solvent soaked wipers. Prepare additional wipers as necessary for drying the piston and cylinder once they have been washed with soap and water.

glg22.eps

Figure 6-5. Preparing the Low Range Cleaning Tool - Step 1

glg23.eps

Figure 6-6. Preparing the Low Range Cleaning Tool - Step 2

원문: Fluke Calibration 2465A 메뉴얼(영문) · 제조사 원문 자료입니다. 사양은 제조사 사정에 따라 변경될 수 있습니다.

3. Scrub the bore of the cylinder using a soft bottle brush, Cashmere Bouquet soap and warm tap water.
4. Rinse thoroughly and dry immediately using the pre-folded wipers wrapped around the cleaning tool. Set the cylinder aside and cover with a clean dry wiper.
5. Insert the rubber stopper into the bottom of the piston. Using a soft paper wiper, Cashmere Bouquet soap and warm tap water, scrub the outside of the piston. Rinse thoroughly and dry immediately. The rubber stopper can be removed after drying, but be careful not to touch the piston body.
6. Set the piston aside and cover with a clean dry wiper. Allow the piston and cylinder to set for about 15 minutes before reassembly.
7. Clean the upper thrust bearing and washer using solvent soaked wipers and set aside.
8. Inspect the O-ring for any sign of damage, replace as necessary.
9. Apply a slight amount of lubricant to the O-ring and wipe off any excess.
10. Place the cylinder upright (the O-ring groove at the bottom) on the work area. Carefully insert the piston into the top of the cylinder and allow it the sink freely into the cylinder. Do not force the piston into the cylinder or it may be damaged.
11. If lint becomes a problem, a clean dry gas source can be used to blow the lint off of the parts prior to assembly.
12. Install the upper thrust bearing around the stem of the piston top.
13. Install the thrust washer on top of the thrust bearing. Install the assembly into the instrument base and test according to Chapter 6, Functional Testing of Piston/Cylinder Assemblies.

Mid Range Piston/Cylinder

Cleaning supplies (see Figure 6-7) consist of:

- Solvent, such as high grade alcohol or acetone
- Low-lint paper wipers, such as Kimberly Clark, Kimwipes number 34155.
- Cleaning tool No. 2460-70-5
- Wooden applicator sticks, such as Puritan No. 807-12.
- Cashmere Bouquet brand hand soap
- Bottle brush, such as RUSKA part number 7-681.
- Warm tap water

원문: Fluke Calibration 2465A 메뉴얼(영문) · 제조사 원문 자료입니다. 사양은 제조사 사정에 따라 변경될 수 있습니다.

glg24.eps

Figure 6-7. Materials for Cleaning the Mid Range Piston/Cylinder

1. Prepare a clean work area near a running tap water source. Prepare several sets of folded wipers as shown in Figures 6-2, 6-3, and 6-4.
2. Two wipers can be folded together for wiping the outside of the piston and cylinder. A single folded wiper can be inserted into and then wrapped around the cleaning tool for cleaning the bore of the cylinder. See Figures 6-7 and 6-8.
3. Disassemble the piston/cylinder assembly.
4. Pre-clean the piston and cylinder using solvent soaked wipers. Prepare additional wipers as necessary for drying the piston and cylinder once they have been washed with soap and water.

glg25.eps

Figure 6-8. Preparing the Mid Range Cleaning Tool

원문: Fluke Calibration 2465A 메뉴얼(영문) · 제조사 원문 자료입니다. 사양은 제조사 사정에 따라 변경될 수 있습니다.

5. Scrub the bore of the cylinder using a soft bottle brush, Cashmere Bouquet soap and warm tap water.
6. Rinse thoroughly and dry immediately using the pre-folded wipers wrapped around the cleaning tool. Set the cylinder aside and cover with a clean dry wiper.
7. Using a soft paper wiper, Cashmere Bouquet soap and warm tap water, scrub the outside of the piston. Rinse thoroughly and dry immediately. Set the piston aside and cover with a clean dry wiper. Allow the piston and cylinder to set for about 15 minutes before reassembly.
8. Clean the thrust bearing, retaining nut, upper retaining ring and lower O-ring spacer using solvent soaked wipers and set aside.
9. Inspect the O-rings for any sign of damage, replace as necessary.
10. Apply a slight amount of lubricant to the O-rings and wipe off any excess.
11. Place the cylinder upright on the work area. Carefully insert the piston into the top of the cylinder and allow it to sink freely into the cylinder. Do not force the piston into the cylinder or it may become damaged.
12. If lint becomes a problem a clean dry gas source can be used to blow the lint off of the parts prior to assembly. Install the thrust bearing around the bottom of the piston.
13. Install the retaining nut on the bottom of the piston and tighten by hand. Do not use wrenches to tighten the nut.
14. Install the O-ring spacer and O-rings into the instrument base.
15. Install the assembly into the instrument base and test according to Chapter 6, “Functional Testing of Piston/Cylinder Assemblies”.

Cleaning the 35 Bar Piston/Cylinder Assembly

Cleaning supplies (refer to Figure 6-9) consist of:

- Solvent, such as high grade alcohol or acetone
- Low-lint paper wipers, such as Kimberly Clark, Kimwipes number 34155
- Retaining Ring Installation Tool, such as RUSKA part number 2-776
- Wooden applicator sticks, such as Puritan number 807-12
- Cashmere Bouquet brand hand soap
- Bottle brush, such as RUSKA part number 7-680
- Warm tap water

원문: Fluke Calibration 2465A 메뉴얼(영문) · 제조사 원문 자료입니다. 사양은 제조사 사정에 따라 변경될 수 있습니다.

glg26.eps

Figure 6-9. Materials for Cleaning the High Range Piston Cylinder

1. Prepare a clean work area near a running tap water source. Prepare several sets of folded wipers as shown in Figures 6-2, 6-3 and 6-4. Two wipers can be folded together for wiping the outside of the piston and cylinder. Prepare several twisted wipers as shown in Figures 6-10, 6-11, and 6-12 to wipe the bore of the cylinder.
2. Disassemble the piston/cylinder assembly.
3. Insert the retaining clip from the bottom of the piston into the installation tool, rinse with solvent and set aside. Pre-clean the piston and cylinder using solvent soaked wipers. Prepare additional wipers as necessary for drying the piston and cylinder once they have been washed with soap and water.

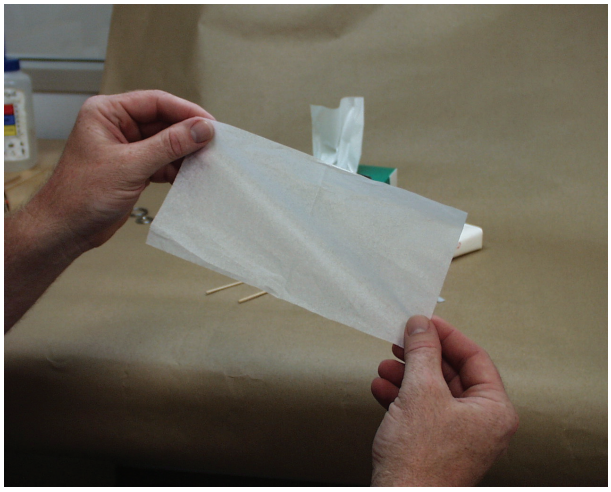

glg27.eps

Figure 6-10. Preparing Kimwipes for Cleaning the High Range Cylinder - Step 1

원문: Fluke Calibration 2465A 메뉴얼(영문) · 제조사 원문 자료입니다. 사양은 제조사 사정에 따라 변경될 수 있습니다.

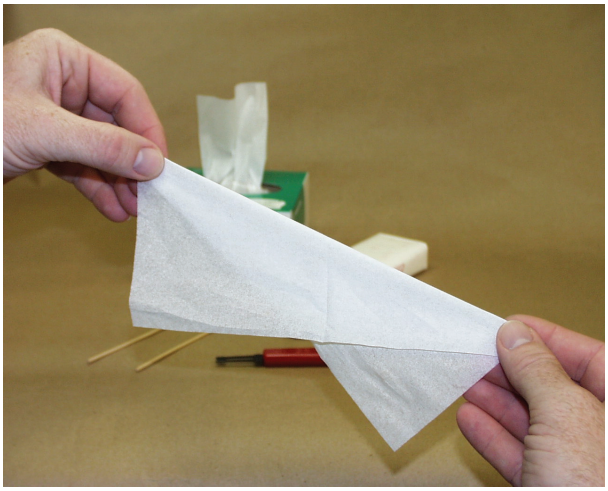

glg28.eps

Figure 6-11. Preparing Kimwipes for Cleaning the High Range Cylinder - Step 2

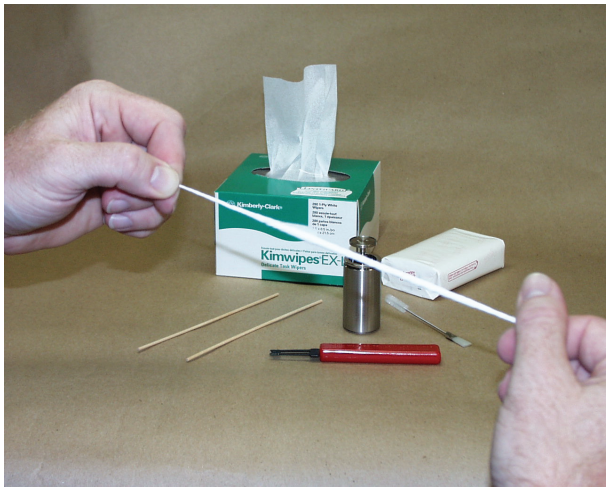

glg29.eps

Figure 6-12. Preparing Kimwipes for Cleaning the High Range Cylinder - Step 3

4. Scrub the bore of the cylinder using a soft bottle brush, Cashmere Bouquet soap and warm tap water.
5. Rinse thoroughly and dry immediately using the pre-twisted wipers. Set the cylinder aside and cover with a clean dry wiper.
6. Using soft paper wiper, Cashmere Bouquet soap and warm tap water, scrub the outside of the piston. Rinse thoroughly and dry immediately. Set the piston aside and cover with a clean dry wiper. Allow the piston and cylinder to set for about 15 minutes before reassembly.

원문: Fluke Calibration 2465A 메뉴얼(영문) · 제조사 원문 자료입니다. 사양은 제조사 사정에 따라 변경될 수 있습니다.

7. Clean the thrust bearing, cylinder container and upper retaining ring using solvent soaked wipers and set aside.
8. Inspect the O-rings for any sign of damage, replace as necessary.
9. Apply a slight amount of lubricant to the O-rings and wipe off any excess.
10. Place the cylinder upright (narrow neck upward) on the work area. Carefully insert the piston into the top of the cylinder and allow it to sink freely into the cylinder. Do not force the piston into the cylinder or it may be damaged.
11. If lint becomes a problem a clean dry gas source can be used to blow the lint off of the parts prior to assembly.
12. Install the thrust bearing around the bottom of the piston with the flange of the outer race facing the bottom of the cylinder.
13. Install the retaining clip onto the bottom of the piston using the installation tool. The end of the piston must be supported during the retaining clip installation so as not to risk breaking the piston.
14. Install the O-ring into the cylinder container.
15. Carefully insert the piston/cylinder assembly into the cylinder container. Do not force the cylinder into the container or it may be damaged. Install the assembly into the instrument base and test according to Chapter 6, Functional Testing of Piston/Cylinder Assemblies.

Cleaning the High Range Piston/Cylinder Assembly

Cleaning supplies (refer to Figure 6-9) consist of:

- Solvent, such as high grade alcohol or acetone
- Low-lint paper wipers, such as Kimberly Clark, Kimwipes number 34155
- Retaining Ring Installation Tool, such as RUSKA part number 2-774
- Wooden applicator sticks, such as Puritan number 807-12
- Cashmere Bouquet brand hand soap
- Bottle brush, such as RUSKA part number 7-680
- Warm tap water

1. Prepare a clean work area near a running tap water source. Prepare several sets of folded wipers as shown in Figures 6-2, 6-3 and 6-4. Two wipers can be folded together for wiping the outside of the piston and cylinder. Prepare several twisted wipers as shown in Figures 6-10, 6-11and 6-12 to wipe the bore of the cylinder.
2. Disassemble the piston/cylinder assembly.
3. Insert the retaining clip from the bottom of the piston into the installation tool, rinse with solvent and set aside.
4. Pre-clean the piston and cylinder using solvent soaked wipers. Prepare additional wipers as necessary for drying the piston and cylinder once they have been washed with soap and water.
5. Scrub the bore of the cylinder using a soft bottle brush, Cashmere Bouquet soap and warm tap water. Rinse thoroughly and dry immediately using the pre-twisted wipers. See Figures 6-13 and 6-14. Set the cylinder aside and cover with a clean dry wiper.
6. Using soft paper wiper, Cashmere Bouquet soap and warm tap water, scrub the outside of the piston. Rinse thoroughly and dry immediately.
7. Set the piston aside and cover with a clean dry wiper. Allow the piston and cylinder to set for about 15 minutes before reassembly.

원문: Fluke Calibration 2465A 메뉴얼(영문) · 제조사 원문 자료입니다. 사양은 제조사 사정에 따라 변경될 수 있습니다.

8. Clean the thrust bearing, cylinder container and upper retaining ring using solvent soaked wipers and set aside.
9. Inspect the O-rings for any sign of damage, replace as necessary.
10. Apply a slight amount of lubricant to the O-rings and wipe off any excess.

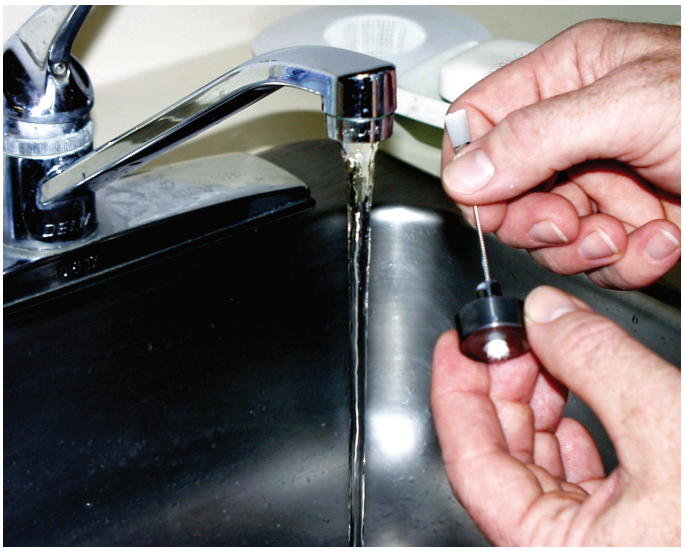

glg30.eps

Figure 6-13. Cleaning the High Range Cylinder

glg31.eps

Figure 6-14. Drying the High Range Cylinder

원문: Fluke Calibration 2465A 메뉴얼(영문) · 제조사 원문 자료입니다. 사양은 제조사 사정에 따라 변경될 수 있습니다.

11. Place the cylinder upright (narrow neck upward) on the work area. Carefully insert the piston into the top of the cylinder and allow it to sink freely into the cylinder. Do not force the piston into the cylinder or it may be damaged.
12. If lint becomes a problem a clean dry gas source can be used to blow the lint off of the parts prior to assembly.
13. Install the thrust bearing around the bottom of the piston with the flange of the outer race facing the bottom of the cylinder.
14. Install the retaining clip onto the bottom of the piston using the installation tool. The end of the piston must be supported during the retaining clip installation so as not to risk breaking the piston.
15. Install the O-ring into the cylinder container.
16. Carefully insert the piston/cylinder assembly into the cylinder container. Do not force the cylinder into the container, or it may become damaged.
17. Install the assembly into the instrument base and test according to the section in this Chapter, Functional Testing of Piston/Cylinder Assemblies.

원문: Fluke Calibration 2465A 메뉴얼(영문) · 제조사 원문 자료입니다. 사양은 제조사 사정에 따라 변경될 수 있습니다.

6-14

원문: Fluke Calibration 2465A 메뉴얼(영문) · 제조사 원문 자료입니다. 사양은 제조사 사정에 따라 변경될 수 있습니다.

Appendix A
Calculations

Explanation of Pressure Calculation Worksheet

(Pages A9 and A11)

These tables may be used with gas and hydraulic piston pressure gauges that are operated with an atmospheric reference or vacuum reference. P_A represents the pressure at the piston reference gauge level, P_B represents the pressure desired at the device under test, and P_H is the head pressure created by the pressure medium and the difference in height between the piston pressure gauge and the device under test.

A. A minimum of six significant figures must be used in all calculations involving reported constants, masses, etc. The manufacturer's claims for accuracy assume the local gravity to be known to at least six significant figures

B. When the piston pressure gauge is used as a standard of pressure, it is convenient to perform the pressure-to-mass calculations in advance of operating the standard. Since the piston gauge temperature fluctuates while it is operated, a confusing point in the procedure is the necessity for the temperature of the gauge to be predicted prior to operation. This “expected temperature” however is used to allow the pressure calculations to be performed. Once the piston pressure gauge is floating at the intended pressure, a final temperature observation is made and then “trim” masses are loaded onto the piston gauge to correct for any temperature variations that exist between the expected and the actual temperatures. The final column in the worksheet is used to calculate the temperature coefficient, which defines the amount of trim that is required to correct for this temperature change.

   It is usually prudent to select an expected temperature (t), which is lower than any temperature that will be experienced. This is so that the operator can always add mass to correct for the actual temperature. Adding mass is generally more convenient than subtracting mass from the planned loading arrangement. Standard metric trim mass set is entirely suitable for this purpose.

원문: Fluke Calibration 2465A 메뉴얼(영문) · 제조사 원문 자료입니다. 사양은 제조사 사정에 따라 변경될 수 있습니다.

All of the calculations will be performed to this expected temperature (t). A final trim would be calculated to adjust the piston gauge to the temperature of the piston at the time of the actual measurement. This correction is calculated in the last column of the worksheet. This column represents the number of grams to be added to the stack of masses for a difference in the actual temperature from the expected temperature, (t). The final trim is computed using the following formula and loaded onto the piston gauge;

"Temp. Coef." x (actual Temperature – expected temperature)

C. The Symbol $A_{o(t)}$ represents the effective area of the piston and its cylinder at atmospheric pressure, when operating at temperature (t); it is obtained from the relation

$$A_{o(t)} = A_{o(23)}\,(1 + c\,\Delta t)$$

where:

$A_{o(23)}$	=	reported area of the piston at 23 degrees Celsius
c	=	thermal coefficient of superficial expansion
Δt	=	$(t - 23)$

D. Gravity and Buoyancy Correction: When the masses are applied to the piston in the presence of the buoyant atmosphere, buoyancy corrections are necessary and are combined with gravity corrections. For convenience, the combined correction K_1 (or K_2) is applied as a multiplier with the result indicating the quantity of apparent mass that is required to produce the desired force (F) on the piston.

For English Units

$$K_1 = (g_s / g_1)\,[\rho_{am} / (\rho_{am} - \rho_{air})]$$

where:

g_s	=	acceleration due to standard gravity, 980.665 cm/sec^2
g_1	=	acceleration due to local gravity in cm/sec^2
ρ_{air}	=	density of air in g/cm^3; see Equation A-4
ρ_{am}	=	density of apparent mass;
		for Apparent Mass versus Brass, 8.4 g/cm^3
		for Apparent Mass versus Stainless Steel, 8.0 g/cm^3

When selecting masses from the calibration report, assure that the values selected are in the same Apparent Mass unit of measure that was used to calculate the K_1 or K_2 values.

원문: Fluke Calibration 2465A 메뉴얼(영문) · 제조사 원문 자료입니다. 사양은 제조사 사정에 따라 변경될 수 있습니다.

The apparent mass (Column 9) is obtained from:

$$M_A = F\ K_1$$

where:

M_A	=	apparent mass; record in Column 9
F	=	force required on piston; as found in Column 8
K_1	=	multiplier which was determined by previous equation

For SI Units

$$K_2 = 1/\left[g_1\left(1 - \rho_a / \rho_b\right)\right]$$

where:

g_1	=	acceleration due to local gravity in m/sec^2
ρ_{air}	=	density of air in g/cm^3; see Equation A-4
ρ_{am}	=	density of apparent mass;
		for Apparent Mass versus Brass, 8.4 g/cm^3
		for Apparent Mass versus Stainless Steel, 8.0 g/cm^3

When selecting masses from the calibration report, assure that the values selected are in the same Apparent Mass unit of measure that was used to calculate the K_1 or K_2 values.

The apparent mass (Column 9) is obtained from:

$$M_A = F\,K_2$$

where:

M_A	=	apparent mass versus brass; record in Column 9
F	=	force required on piston; as found in Column 8
K_2	=	multiplier which was obtained by previous equation

When the masses are applied to the piston in an evacuated bell jar, the above equations for K_1 and K_2 can still be used. In this situation, the density of air (P_{AIR}) will be zero which will cause the buoyancy portion of the equation to become 1. Also, the results will indicate the quantity of true mass (not apparent mass) that must be applied to the piston.

E. Column 1, P_β, is the desired pressure at the reference plane of the device being calibrated.

원문: Fluke Calibration 2465A 메뉴얼(영문) · 제조사 원문 자료입니다. 사양은 제조사 사정에 따라 변경될 수 있습니다.

F. Column 2 is the mass density of the pressure medium being used in the piston pressure gauge system. For hydraulic piston pressure gauges, this number can be considered constant for all pressures. Fluke Calibration has two types of hydraulic piston fluids available. One is a Spinesstic 22™ part number 55-500 which has a density of 0.031 pounds per cubic inch (858 kilograms per cubic meter). The other is a Dioctyl Sebacate (DOS) part number 55-521-1 which has a density of 0.033 pounds per cubic inch (913 kilograms per cubic meter). For gas medium piston gauges, the values in Column 2 will be different for different system pressures. Equations are provided to calculate the density of air or nitrogen as a function of the system pressure.

G. Column 3 is required to adjust the mass density of the pressure medium for local gravity. It is also used to correct the pressure head that exist between the reference ports of the piston gauge and device under test.

H. Column 4, P_H, is the pressure correction that is required if the reference plane of the device being calibrated is not the same plane as the reference plane of the piston pressure gauge. The difference between the two planes, h, is positive if the reference plane of the device being calibrated is higher than the reference plane of the piston pressure gauge.

I. Column 5 is the pressure required at the reference plane of the piston pressure gauge to produce the desired pressure at the reference plane of the device being calibrated. When the piston gauge is operating in the absolute mode, the Reference pressure, P_R, is subtracted to obtain the differential pressure that the piston is required to generate.

J. The value of $1 + b_1 P_A + b_2 P_A{}^2$, which is used to determine the piston area at different system pressures, is recorded in column 6. For some pistons, b_1 and/or b_2 are equal to zero. Always observe the sign in front of b_1 and b_2 as found in the calibration report.

K. Column 7 is used to record $A_{e(t)}$ which is the area of the piston at pressure P_A and at the expected temperature (t).

L. Column 8, the weight load, is the force required on a piston of given area to produce a given pressure.

$$F = P_A A_{e(t)}$$

where:

F	=	Weight load or force on the piston
P_A	=	Pressure as indicated in Column 5
$A_{e(t)}$	=	Effective piston area at the expected temperature (t).

M. Column 9 is the apparent mass that is required to produce the force listed in Column 8.

원문: Fluke Calibration 2465A 메뉴얼(영문) · 제조사 원문 자료입니다. 사양은 제조사 사정에 따라 변경될 수 있습니다.

N. Column 10 is a listing of the different masses to be loaded on the piston pressure gauge to create the pressure listed in Column 5. The masses which will be listed here are in addition to the **tare** components (piston, surface tension effects, bell jar reference pressure, etc.). The mass of the tare components must be subtracted from the mass shown in Column 9 before selection of the miscellaneous masses is started.

After subtracting the TARE mass from the Total Mass shown in Column 9, we must now subdivide/distribute the remaining required mass value among the available masses that will be loaded onto the Piston Table Assembly. It is most likely that there may be many combinations of available masses that could be used to yield the required Total Mass. However, it is strongly recommended that an orderly and sequential method by used. From the Mass Set Table (calibration report) first determine if the Sleeve Mass is required (which would be the case if the realization of the Total Mass value would require the use of the larger platter masses). If yes, then subtract its mass value from the Total Mass value which results in a new "remainder". From this "remainder" mass value, choose the next largest available mass value that may be subtracted. If the choice is from one of several "nominal" mass platters then choose the first one in the available sequence. Subtract this value from the "remainder", which now results in another new "remainder" mass value. Continue this process until the "remainder", which now results in another new "remainder" mass value. Continue this process until the "remainder" is smaller than the smallest available mass from the mass set. At every step record the selected mass (its mass ID number) into Column 10.

O. Column 11, the remainder from Column 10, is the mass that must be placed on the piston pressure gauge to complete the mass needed to set the desired pressure. This "remainder", recorded in Column 11, is realized with the Trim Mass set provided with all RUSKA Mass Sets. The Fluke supplied Trim Mass Sets are defined as Class 3, Type 1 (per ASTM E617, formerly Class S1 per NBS Cir. 547).

These fractional masses should also be used to adjust the mass load for piston pressure gauge operating temperatures that differ from the expected temperature (t). These fractional masses could also be used to adjust the mass load for the piston pressure gauge if the reference plane of the device being calibrated is at a different elevation than planned in the original head correction.

P. In the English system, the remainder can be recorded in pounds in Column 11, and in grams in Column 12. The conversion factor to convert pound mass to grams is 453.59237 g/lbm.

Q. Column 13 is used to calculate a temperature coefficient. This temperature coefficient is used to correct for any piston temperature variation from the expected temperature value that was used to calculate the mass loads for the various pressure points in the worksheet. See item B above.

원문: Fluke Calibration 2465A 메뉴얼(영문) · 제조사 원문 자료입니다. 사양은 제조사 사정에 따라 변경될 수 있습니다.

EQUATION A-4

Air Density

Air Density (ρ_{air}) in units of g/cm^3, is calculated as follows;

$$\rho_{air} = \left(0.0004646\ x\ \left(P - 4990221.6\ x\ U\ x\ e^{(-5315.56/(273.15\ +\ t))}\right)\right)/\left(273.15 + t\right)$$

where:

P = Barometric Pressure, (mmHg)

t = Air Temperature, (ºC)

U = Relative Humidity, (%RH)

Nitrogen Density - English Units (0 to 1000 PSIG)

To calculate the density of Nitrogen at pressures from 0 psig to 1000 psig, use the following equation;

$$DENSITY\ \left(lbm/in^3\right) = \left(2.826x10^{-6}\right)\ x\ P$$

where;

$P = PRESSURE$ in psi absolute (if P is in gauge, convert it to an absolute value by adding barometric pressure, e.g. $P + 14.7$)

Nitrogen Density - English Units (1,000 to 15,000 Psig)

To calculate the density of Nitrogen at pressures from 1,000 psig to 15,000, use the following equation;

$$DENSITY\ \left(lbm/in^3\right) = \left(2.37465\ x\ 10^{-4}\right) + \left(2.74396\ x\ 10^{-6}\right)P - \left(9.46069\ x\ 10^{-11}\right)P^2$$

where;

$P = PRESSURE$ in psi absolute (if P is in gauge, convert it to an absolute value by adding barometric pressure, e.g. $P + 14.7$)

Nitrogen Density - SI Units (0 to 6.9 MPa)

To calculate the density of Nitrogen at pressures from 0.01 MPa gauge to 6.9 MPa, use the following equation;

$$DENSITY\left(kg/m^3\right) = 1.1347E - 05\ x\ P$$

where;

$P = PRESSURE$ in Pa absolute (if P is in gauge, convert it to Pa absolute by adding barometric pressure, e.g. $P + 101325$)

원문: Fluke Calibration 2465A 메뉴얼(영문) · 제조사 원문 자료입니다. 사양은 제조사 사정에 따라 변경될 수 있습니다.

Nitrogen Density - SI Units (6.9 MPa to 100 MPa)

To calculate the density of Nitrogen at pressures from 6.9 MPa gauge to 100 MPa, use the following equation;

$$DENSITY\left(kg/m^3\right) = 6.573 + (11.016)P - (0.055087)P^2$$

where;

$P = PRESSURE$ in MPa absolute (if P is in gauge, convert it to MPa absolute by adding barometric pressure, e.g. $P + 0.101325$)

Zero Air Density - SI Units (0 MPa to 20.7 MPa)

To calculate the density of Zero Air at pressures to 20.7 MPa, use the following equation;

$$DENSITY\left(kg/m^3\right) = \left(1.17\ \ E-05\right)\ x\ P$$

where;

$P = PRESSURE$ in Pa absolute (if P is in gauge, convert it to Pa absolute by adding barometric pressure, e.g. $P + 101325$)

Helium Density - SI Units (0 to 6.9 MPa)

To calculate the density of Nitrogen at pressures from 0.01 MPa gauge to 6.9 MPa, use the following equation;

$$DENSITY\left(kg/m^3\right) = \left(1.585\ \ E-06\right)\ x\ P$$

where;

$P = PRESSURE$ in Pa absolute (if P is in gauge, convert it to Pa absolute by adding barometric pressure, e.g. $P + 101325$)

Helium Density - SI Units (6.9 MPa to 100 MPa)

To calculate the density of Nitrogen at pressures from 6.9 MPa gauge to 100 MPa, use the following equation;

$$DENSITY\left(kg/m^3\right) = 0.3136\ \ E-01 + (1.508)P - \left(3.886\ \ E-03\right)P^2$$

where;

$P = PRESSURE$ in MPa absolute (if P is in gauge, convert it to MPa absolute by adding barometric pressure, e.g. $P + 0.101325$)

원문: Fluke Calibration 2465A 메뉴얼(영문) · 제조사 원문 자료입니다. 사양은 제조사 사정에 따라 변경될 수 있습니다.

Conversion Factors

Table A-1. Conversion Factors

To Convert From	To	Multiply By
Pa	N/m^2	1
N/m^2	Pa	1
Pa	MPa	10^{-6}
MPa	Pa	10^{-6}
N/m^2	MPa	10^{-6}
MPa	N/m^2	10^{-6}
Pa	PSI	1.450377 X 10-4
PSI	Pa	6894.76
MPa	PSI	145.0377
PSI	MPa	6.89476×10^{-3}

where

Pa	=	pascal
MPa	=	megapascal
N	=	newton
m	=	meter
PSI	=	pounds per square inch

원문: Fluke Calibration 2465A 메뉴얼(영문) · 제조사 원문 자료입니다. 사양은 제조사 사정에 따라 변경될 수 있습니다.

Piston Pressure Gauge Pressure Calculation Worksheet (English Units)

Date _____

Reference Plane Difference, h _____ inch

Mass Set Serial No. _____

Piston Serial No. _____

$A_{o(23)} = A_o$ at 23 °C _____ $inch^2$

b_1 _____ /psi

b_2 _____ $/psi^2$

c _____ / °C

Expected Temperature, (t) _____ °C

$A_{o(t)} = A_{o(23)}[1 + c(t-23\,°C)]$ _____ $inch^2$

Local Gravity, g_L _____ cm/sec^2

Air Density, ρ_{air} _____ g/cm^3 _____ lb/in^3

Gravity & Buoyancy, K_1 _____

Tare, Apparent Mass _____ pound

Reference Pressure, P_R _____ mtorr _____ psi

1	2	3	4	5	6	7	8	9	10	11	12	13
P_B NOMINAL PRESSURE	ρ_{medium} (Mass Density)	$\rho_W = (\rho_{medium} - \rho_{air}$ $lb/in^3) \times g_L \div 980.665$	$P_H = \rho_W \times h$	$P_A = P_B + P_H - P_R$	$1 + b_1P_A + b_2 P_A^2$	$A_{e(t)} = A_{o(t)} \times$ Column 6	$F = P_A \times A_{e(t)}$	$M = F \times K_1$	Masses to be used	Remainder	Remainder	Temp. Coef. = Column 9 x 453.59237 x c
psi	lb mass/in^3	Lb force/in^3	psi	psi		in^2	lb force	lb mass	**Tare** Plus	lb mass	grams	g/°C

A-9

원문: Fluke Calibration 2465A 메뉴얼(영문) · 제조사 원문 자료입니다. 사양은 제조사 사정에 따라 변경될 수 있습니다.

원문: Fluke Calibration 2465A 메뉴얼(영문) · 제조사 원문 자료입니다. 사양은 제조사 사정에 따라 변경될 수 있습니다.

Piston Pressure Gauge Pressure Calculation Worksheet (SI Units)

Date _____

Reference Plane Difference, h _____ m

Mass Set Serial No. _____

Piston Serial No. _____

$A_{o(23)} = A_o$ at 23 °C _____ m^2

b_1 _____ /MPa _____ /Pa

b_2 _____ $/Mpa^2$ _____ $/Pa^2$

c _____ / °C

Expected Temperature, (t) _____ °C

$A_{o(t)} = A_{o(23)}[1 + c(t-23\,°C)]$ _____ m^2

Local Gravity, g_L _____ m/sec^2

Air Density, ρ_{air} _____ g/cm^3 _____ kg/m^3

Gravity & Buoyancy, K_2 _____

Tare, Mass _____ kg

Reference Pressure, P_R _____ mtorr _____ Pa

1	2	3	4	5	6	7	8	9	10	11	12
P_B NOMINAL PRESSURE	ρ_{medium} (Mass Density)	$\rho_W = (\rho_{medium} - \rho_{air}$ $kg/m^3) \times g_L$	$P_H = \rho_W \times h$	$P_A = P_B + P_H - P_R$	$1 + b_1 P_A + b_2 P_A^2$	$A_{e(t)} = A_{o(t)} \times$ Column 6	$F = P_A \times A_{e(t)}$	$M = F \times K_2$	Masses to be used	Remainder	Temp. Coef. = Column 9 x 1000g/kg x c
Pa	kg/m^3	N/m^3	Pa	Pa		m^2	N	kg	**Tare** Plus	grams	g/ °C

A-11

원문: Fluke Calibration 2465A 메뉴얼(영문) · 제조사 원문 자료입니다. 사양은 제조사 사정에 따라 변경될 수 있습니다.

원문: Fluke Calibration 2465A 메뉴얼(영문) · 제조사 원문 자료입니다. 사양은 제조사 사정에 따라 변경될 수 있습니다.

Appendix B
Drawings and Bills of Materials

Drawings and Bills of Material

This section contains drawings and bills of material for the Gas Piston Gauge, RUSKA 2465A-754.

원문: Fluke Calibration 2465A 메뉴얼(영문) · 제조사 원문 자료입니다. 사양은 제조사 사정에 따라 변경될 수 있습니다.

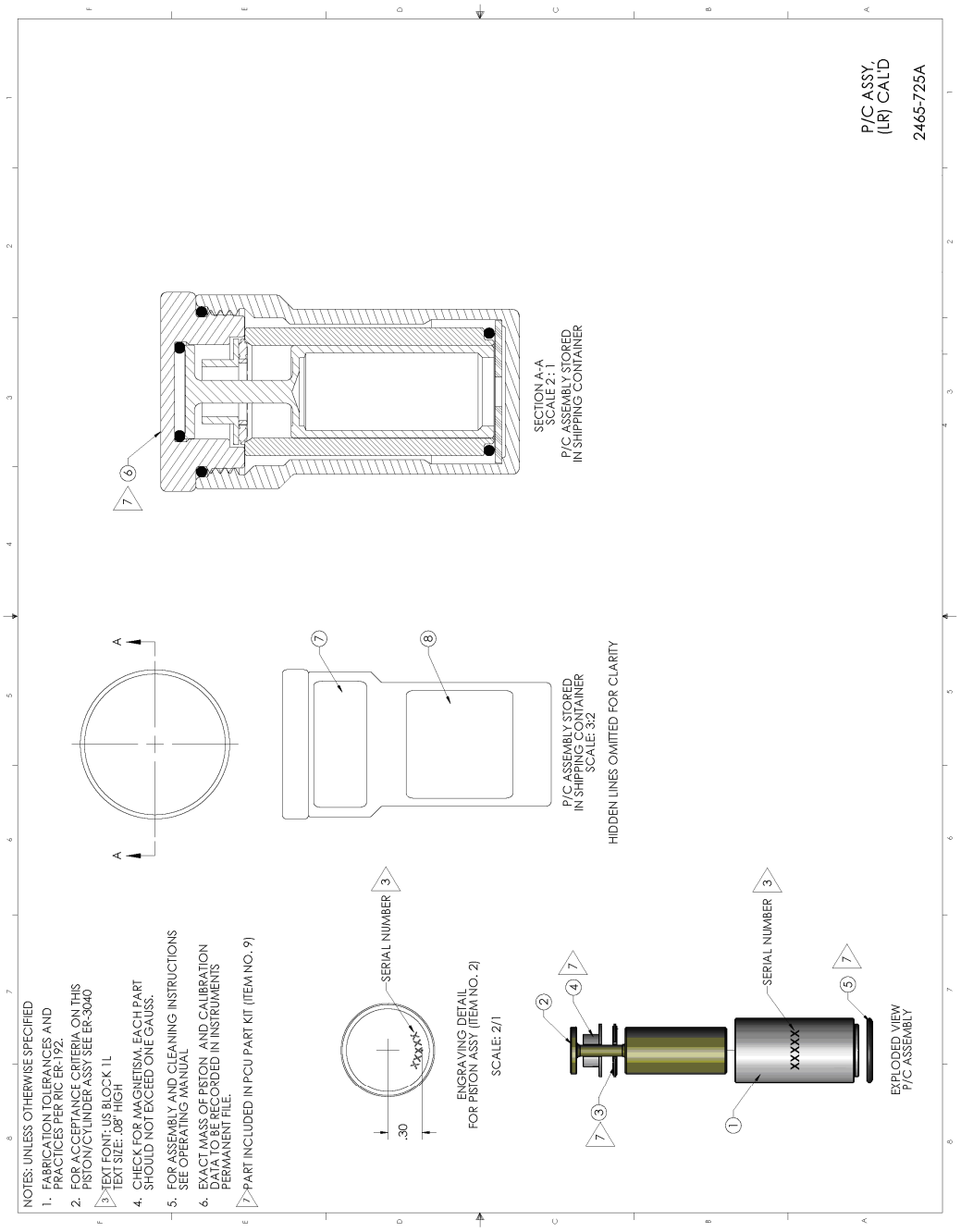

glg32.bmp

Figure B-1. P/C ASSY. (LR) CAL'D

원문: Fluke Calibration 2465A 메뉴얼(영문) · 제조사 원문 자료입니다. 사양은 제조사 사정에 따라 변경될 수 있습니다.

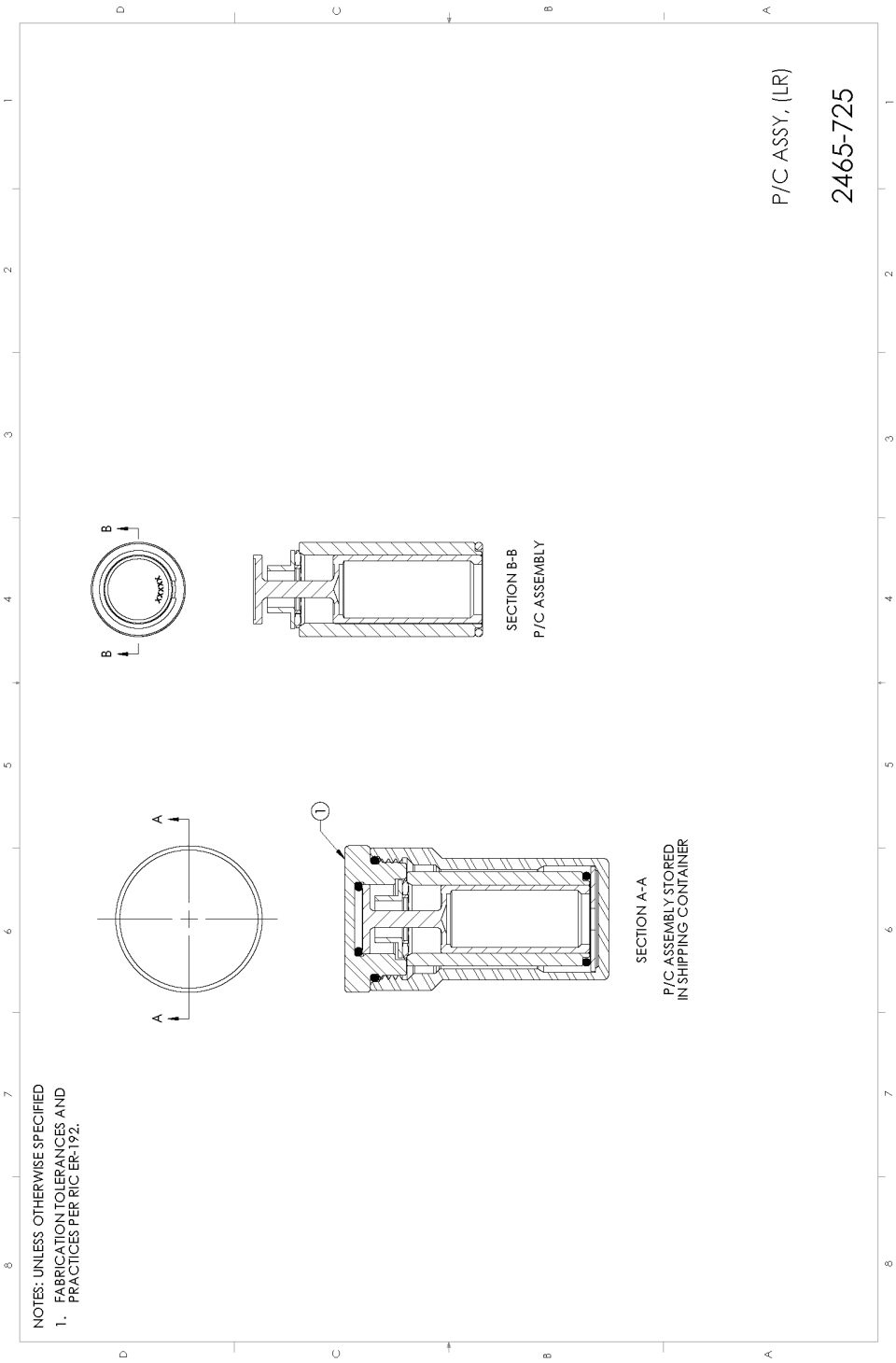

glg33.bmp

Figure B-2. P/C ASSY. (LR)

원문: Fluke Calibration 2465A 메뉴얼(영문) · 제조사 원문 자료입니다. 사양은 제조사 사정에 따라 변경될 수 있습니다.

RUSKA 2465A-754
Users Manual

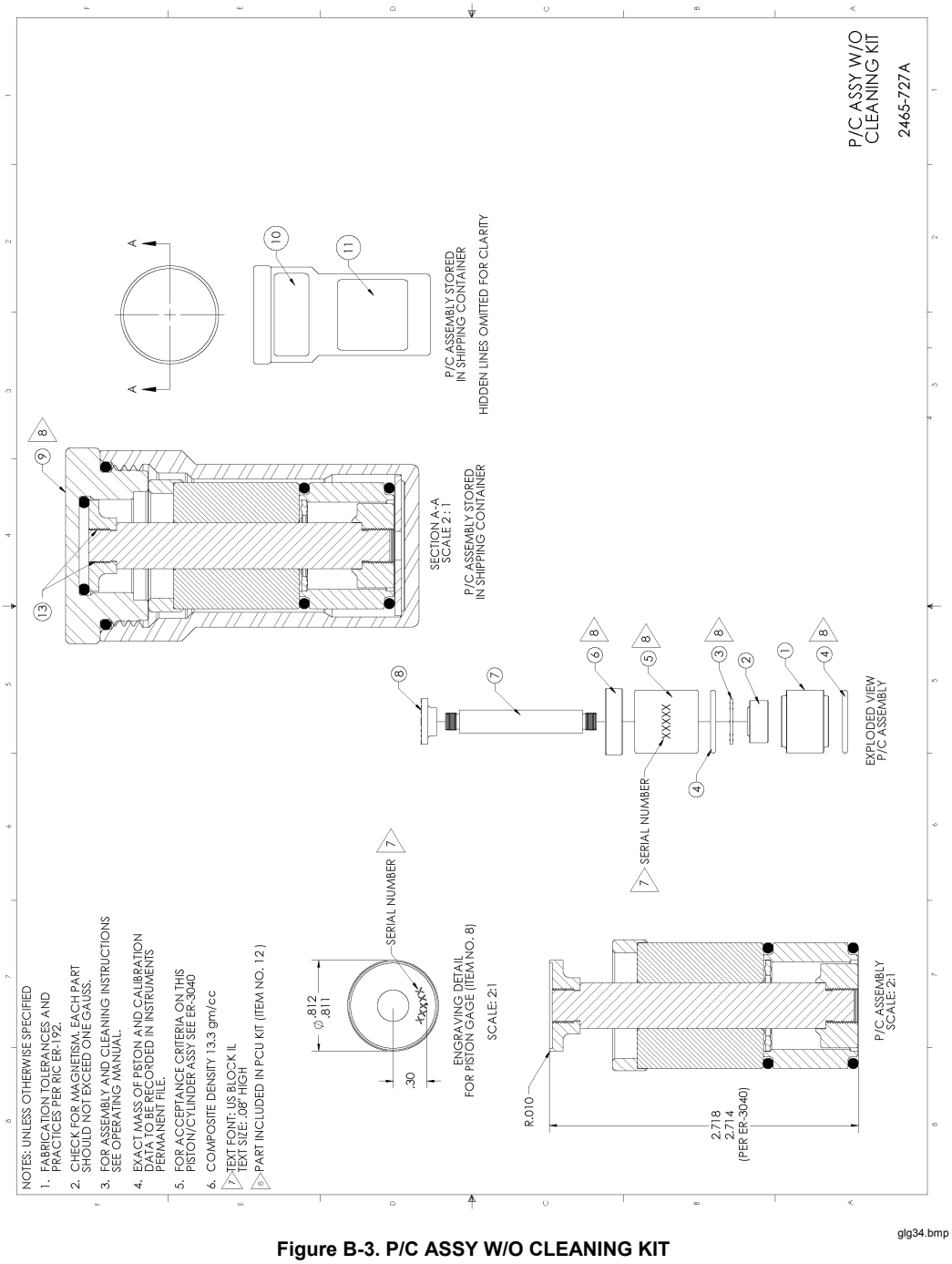

Figure B-3. P/C ASSY W/O CLEANING KIT

원문: Fluke Calibration 2465A 메뉴얼(영문) · 제조사 원문 자료입니다. 사양은 제조사 사정에 따라 변경될 수 있습니다.

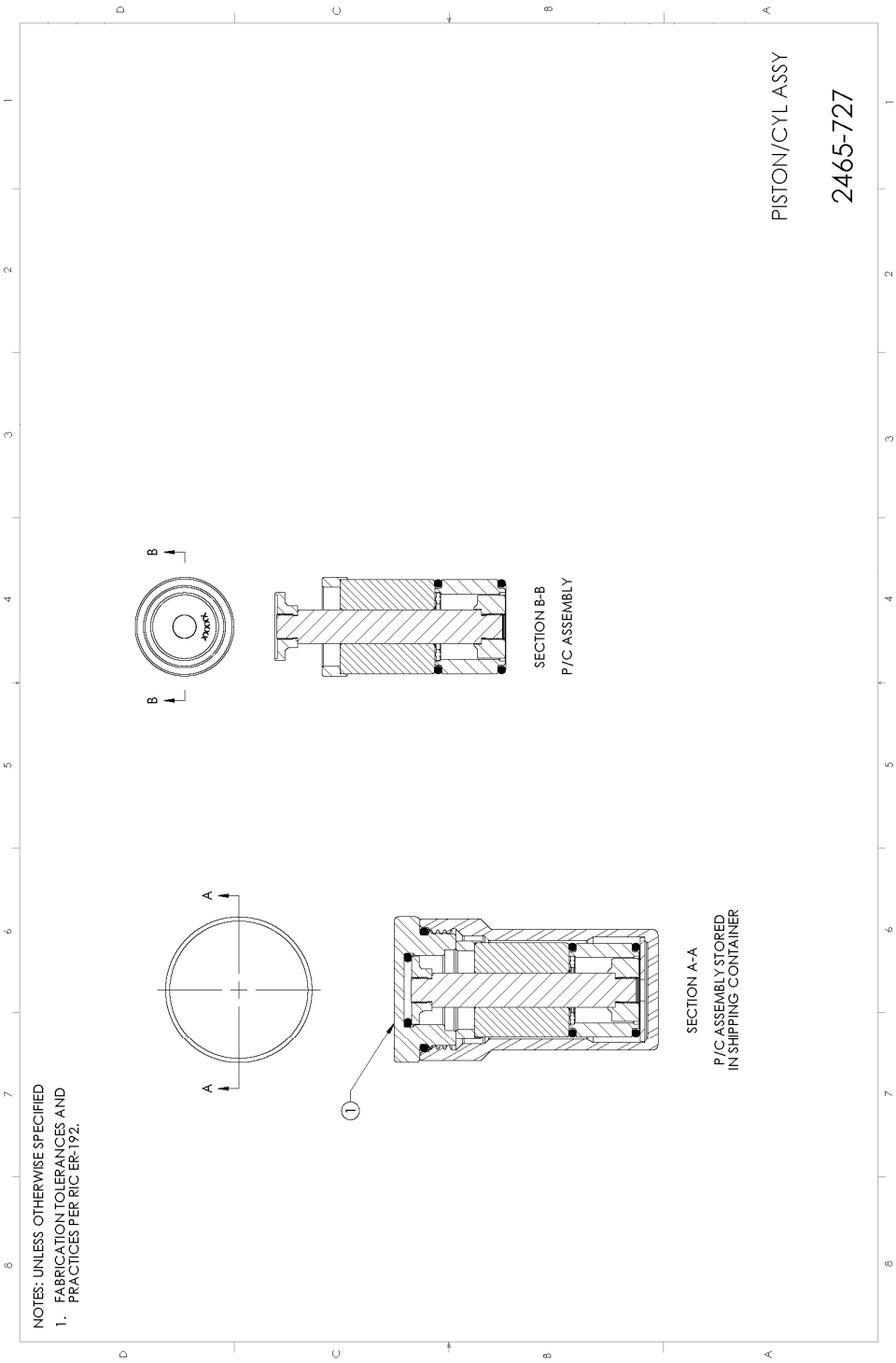

glg35.bmp

Figure B-4. PISTON/CYL ASSY

원문: Fluke Calibration 2465A 메뉴얼(영문) · 제조사 원문 자료입니다. 사양은 제조사 사정에 따라 변경될 수 있습니다.

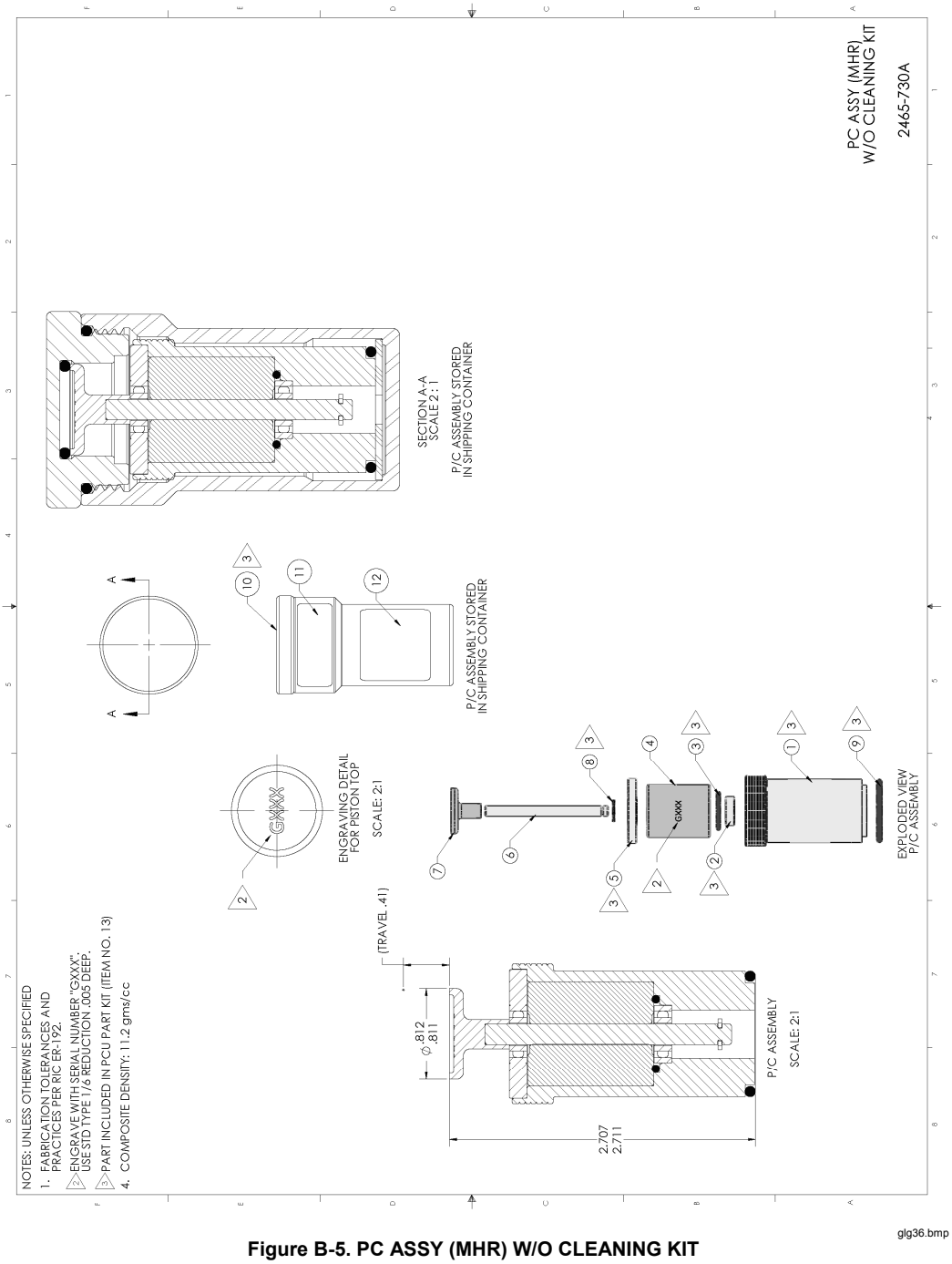

glg36.bmp

Figure B-5. PC ASSY (MHR) W/O CLEANING KIT

원문: Fluke Calibration 2465A 메뉴얼(영문) · 제조사 원문 자료입니다. 사양은 제조사 사정에 따라 변경될 수 있습니다.

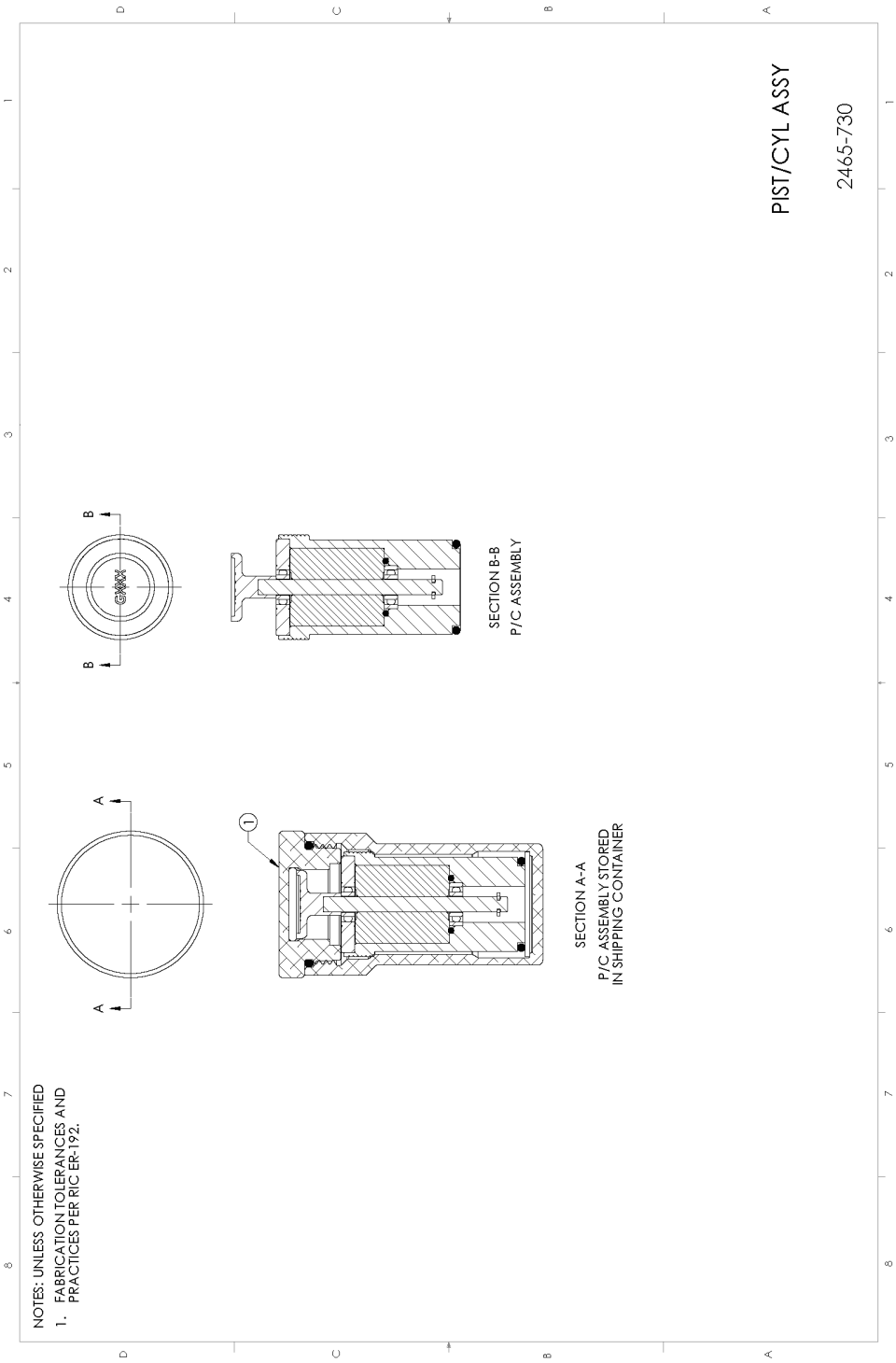

glg37.bmp

Figure B-6. PIST/CYL ASSY

원문: Fluke Calibration 2465A 메뉴얼(영문) · 제조사 원문 자료입니다. 사양은 제조사 사정에 따라 변경될 수 있습니다.

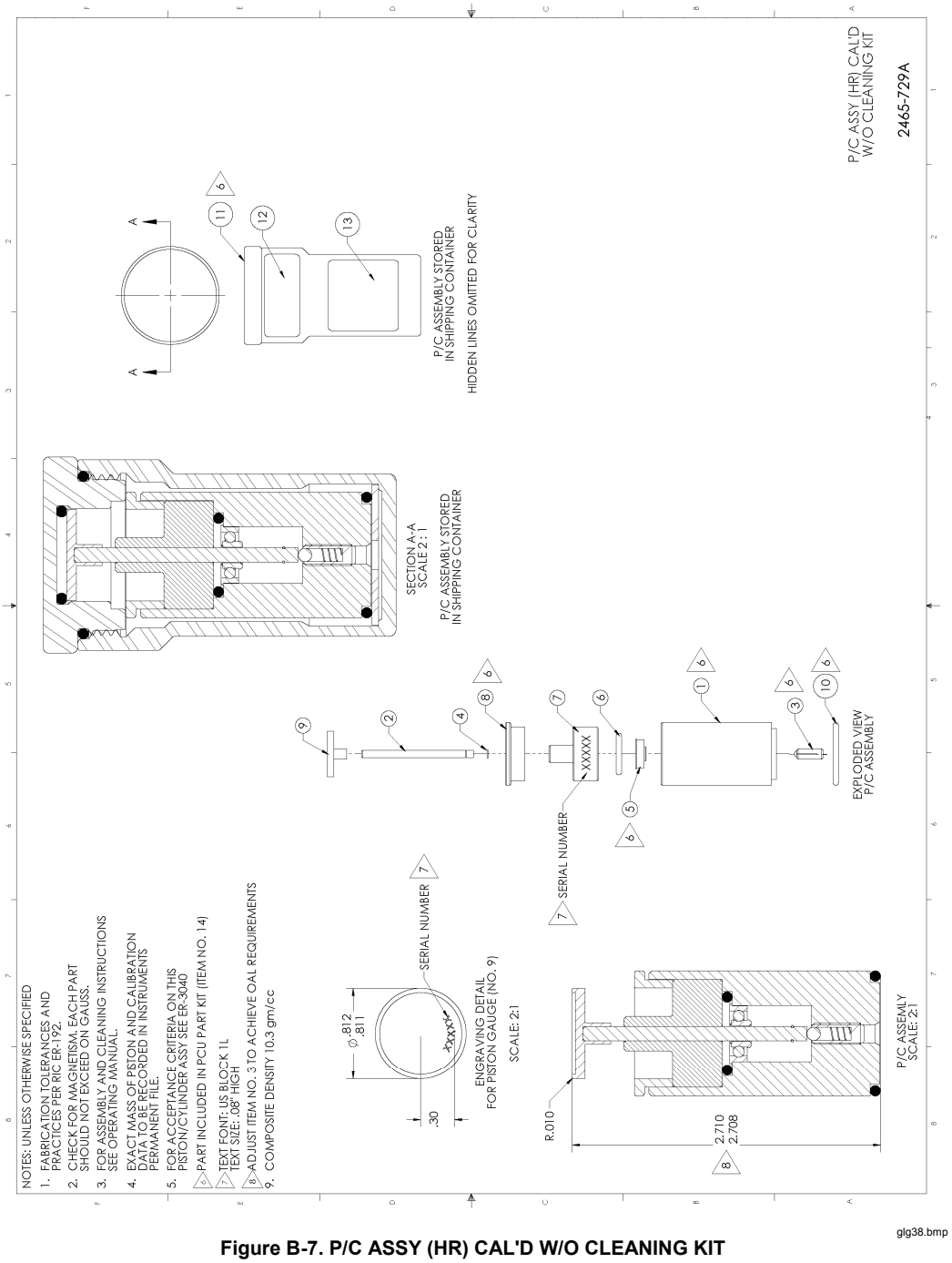

Figure B-7. P/C ASSY (HR) CAL'D W/O CLEANING KIT

원문: Fluke Calibration 2465A 메뉴얼(영문) · 제조사 원문 자료입니다. 사양은 제조사 사정에 따라 변경될 수 있습니다.

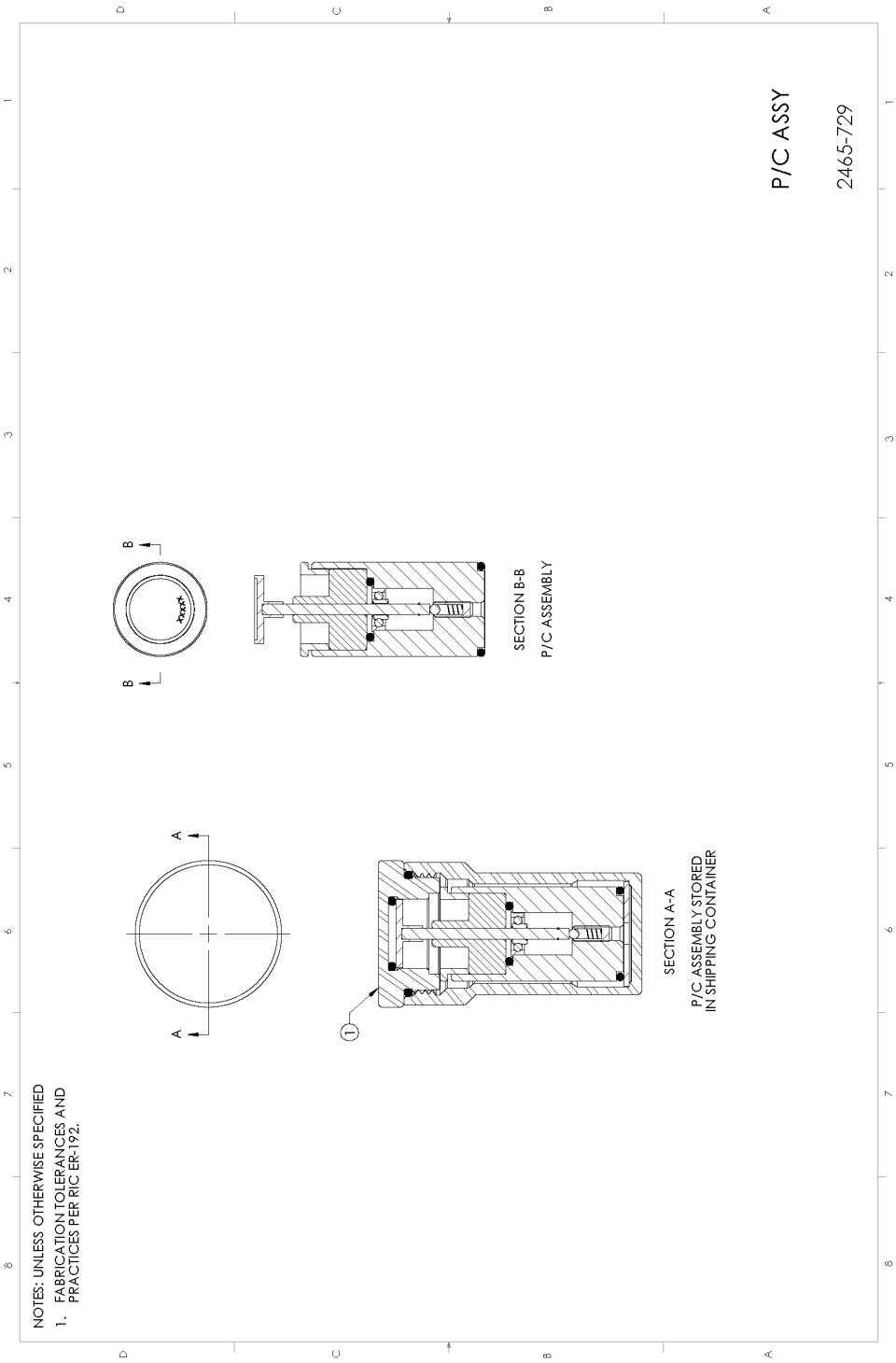

glg39.bmp

Figure B-8. P/C ASSY

원문: Fluke Calibration 2465A 메뉴얼(영문) · 제조사 원문 자료입니다. 사양은 제조사 사정에 따라 변경될 수 있습니다.

Table B-1. 387 3048 Seal Replacement Kit

Oracle No.	Ruska Part Number	Description	QTY	DWG ID
3865053	54-700-259	O-RING BUNA N 6-1/4 X 1/8	1	1
3896283	2460-7-2	GASKET, BELL JAR BOTTOM	1	2
3865011	54-700-22	O-RING BUNA N 1 X 1/16	1	3
3865048	54-700-239	DRIVE BELT	1	4
3900227	24-649	FITTING FILTER DISC, BRASS	1	5
3865261	54-703-119	O-RING VITON 15/16 X 3/32	1	6
3865027	54-700-227	O-RING BUNA N 2 1/8 X 1/8	1	7
3865454	54-703-6	O-RING VITON 3/8 X 1/4 X 1/16	2	8
3864782	54-700-111	O-RING BUNA N 7/16 X 3/32	1	9
3865195	54-703-10	O-RING VITON 1/4 X 1/16	3	10
3899971	24-580	MEMBRANE FILTER	5	11
3865238	54-703-113	O-RING VITON 9/16 X 3/32	1	*
3872923	2460-6-156	RETAINING CLIP	3	*

* See Page B-9

Fluke recommends the unit is returned to the factory if items 7, 8, 9, or 10 need replacement.

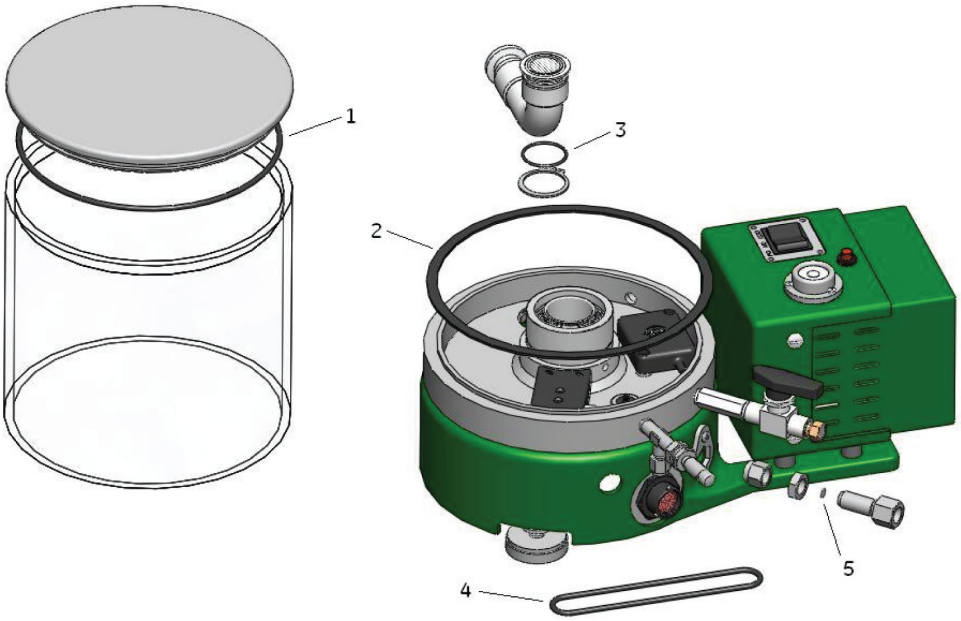

glg46.bmp

Figure B-9. RUSKA 2465A-754 - Exterior View

원문: Fluke Calibration 2465A 메뉴얼(영문) · 제조사 원문 자료입니다. 사양은 제조사 사정에 따라 변경될 수 있습니다.

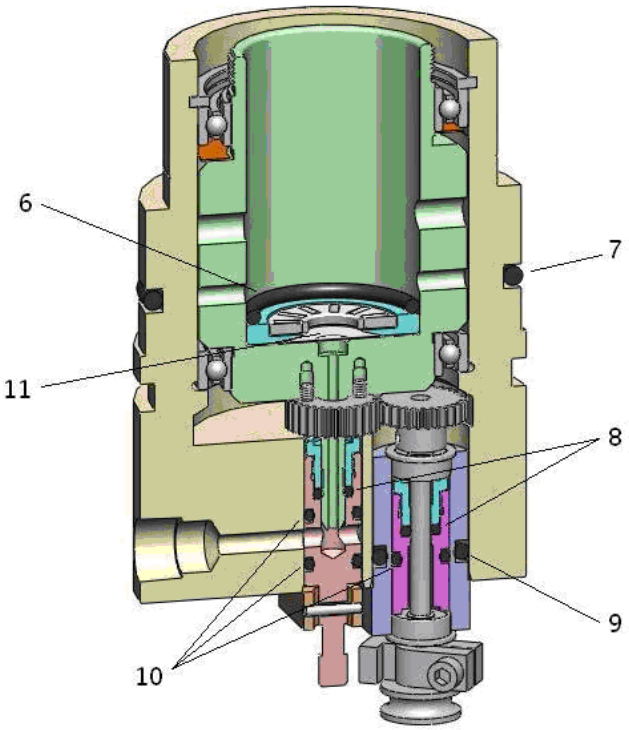

glg41.bmp

Figure B-10. RUSKA 2465A-754 - Interior View

원문: Fluke Calibration 2465A 메뉴얼(영문) · 제조사 원문 자료입니다. 사양은 제조사 사정에 따라 변경될 수 있습니다.

Table B-2. 2465A-23, Lines & Fitting Kit

Fluke Item	Description	Qty
3862830	25-364, FTG NPL CAJ 2HLN 1/8X1-1/2 SS-2-HLN-1.50	1
3862990	25-434, FTG 1/8NPTMX1/4TBG SS-400-1-2	3
3863003	25-438, FTG M CON 1/4 NPTX1/4TBG SWAGELOK ONLY	2
3134815	101806, ADPT, BR, 6T X 4NPTM	1
3863157	25-482, FTG CONN F SWLOK B600-7-4	1
3863366	25-664, FTG ¼ NPTMX #4ANMALE SS SS-4-AN-A-4	2
3904071	33-886, HOSEAS 3130-03 72 IN SYNFLEX WP=3000PSI	1
3863774	33-905, HOSE, STEEL 1.5KSI 48 IN SWAGELOK SS-FL4TA4TA4-48	2
3904904	45-335, GREASE DOW HI-VAC (5.3 OZ TUBE) CMS #056-762	1
3915196	86-856, TUBING:POLYETHYLENE, .66P, 3/8 O.D. C-SPECS	72
3866900	88-807, VALVE BALL FM SS-1/8NPT 2 PORT SS-42F2	1
3917778	99876-1, CLAMP WITH WING NUT KF16 OR KF-10	2
3917784	99876-2, CENTERING RING KF16 LEYBOLD# 88346	2
3137082	102519, ADPT, SS, KF16 X 4NPTM	1
3917791	99876-60, VACC HOSE 60 IN KF16	1

원문: Fluke Calibration 2465A 메뉴얼(영문) · 제조사 원문 자료입니다. 사양은 제조사 사정에 따라 변경될 수 있습니다.

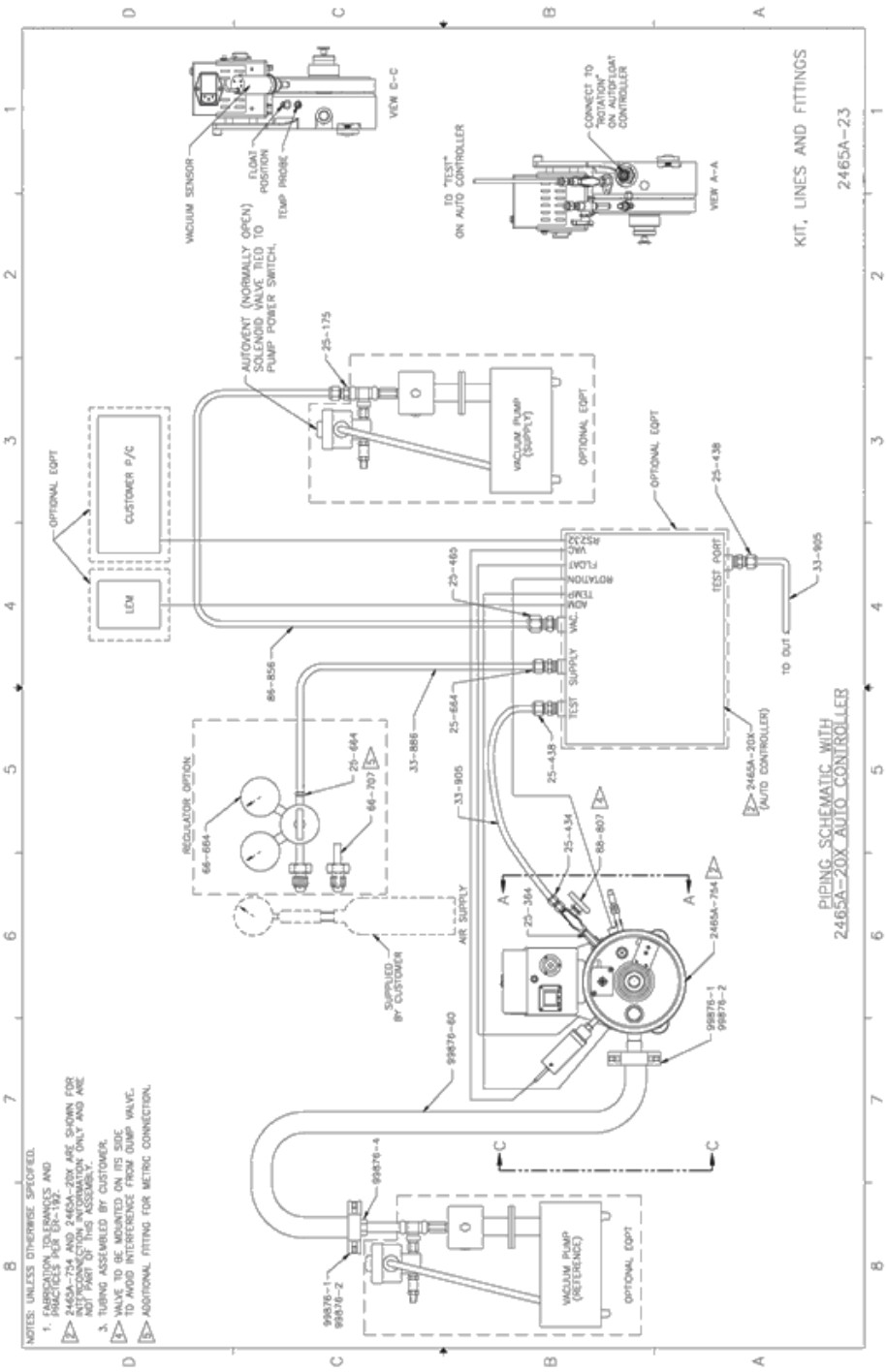

glg42.bmp

Figure B-11. Kit, Lines and Fittings

원문: Fluke Calibration 2465A 메뉴얼(영문) · 제조사 원문 자료입니다. 사양은 제조사 사정에 따라 변경될 수 있습니다.

RUSKA 2465A-754
Users Manual

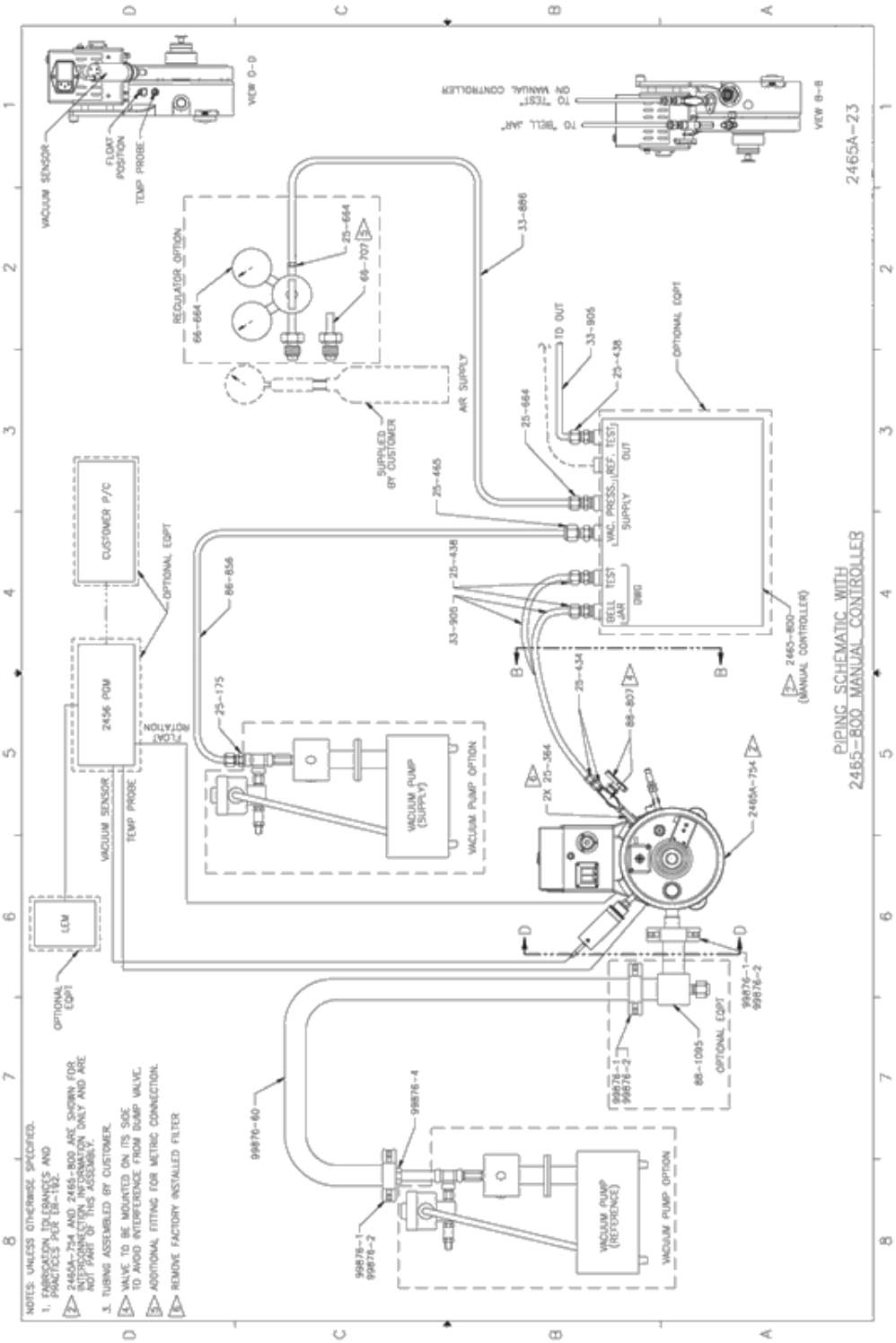

glg43.bmp

Figure B-12. 2465A-23

원문: Fluke Calibration 2465A 메뉴얼(영문) · 제조사 원문 자료입니다. 사양은 제조사 사정에 따라 변경될 수 있습니다.