PG9000™ Piston Gauge

Operation and Maintenance Manual

© 1998-2010 Fluke Calibration

원문: Fluke Calibration PG9602/9607 메뉴얼(영문) · 제조사 원문 자료입니다. 사양은 제조사 사정에 따라 변경될 수 있습니다.

⚠ Warning

To prevent possible electrical shock, fire, or personal injury:

- **Read all safety Information before you use the product.**
- **Use the product only as specified, or the protection supplied by the product can be compromised.**
- **High-pressure liquids and gases are potentially hazardous. Energy stored in these liquids and gases can be released unexpectedly and with extreme force. High-pressure systems should be assembled and operated only by personnel who have been instructed in proper safety practices.**
- **Use only the main power cord and connector approved for the voltage and plug configuration in your country and rated for the product.**
- **Make sure the ground conductor in the main power cord is connected to a protective earth ground. Disruption of the protective earth could put voltage on the chassis that could cause death.**
- **Replace the main power cord if the insulation is damaged or if the insulation shows signs of wear.**
- **Do not put the product where access to the main power cord is blocked.**
- **Do not use and disable the product if it is damaged.**
- **Use this product indoors only.**

© 1998 - 2010 **Fluke Calibration** All rights reserved.

Information in this document is subject to change without notice. No part of this document may be reproduced or transmitted in any form or by any means, electronic or mechanical, for any purpose, without the express written permission of **Fluke Calibration, 4765** East Beautiful Lane, Phoenix, Arizona 85044-5318 USA.

Fluke Calibration makes sincere efforts to ensure the accuracy and quality of its published materials; however, no warranty, expressed or implied, is provided. **Fluke Calibration** disclaims any responsibility or liability for any direct or indirect damages resulting from the use of the information in this manual or products described in it. Mention of any product or brand does not constitute an endorsement by **Fluke Calibration** of that product or brand. This manual was originally composed in English and was subsequently translated into other languages. The fidelity of the translation cannot be guaranteed. In case of conflict between the English version and other language versions, the English version predominates.

Fluke Calibration, **DH**, **DHI**, PG9000, PG9607, CalTool and COMPASS are trademarks, registered and otherwise, of **Fluke Corporation.**

Swagelok is a registered trademark of the Swagelok Company.
Krytox is a registered trademark of the Dupont de Nemours Company.

Products described in this manual are manufactured under international patents and one or more of the following U.S. patents: 6,701,791, 5,142,483, 5,257,640, 5,331,838, 5,445,035. Other U.S. and international patents pending.

Document No. 3782240
100820
Printed in the USA

© 1998-2010 Fluke Calibration

Table of Contents

Table of Contents III

Tables V

Figures VI

About This Manual VII

1. Introduction 1

1.1 Product Overview 1

1.2 Specifications 2

1.2.1 General Specifications 2

1.2.1.1 AMH Automated Mass Handler (Optional) 3

1.2.1.2 Embedded Features 3

1.2.1.3 Ambient and Instrument Condition Measurements 4

1.2.2 Piston-Cylinder Assembly (PC-9607-5) 5

1.2.3 Mass Sets 5

1.2.4 Pressure Measurements (PG9607) 5

1.3 Front and Rear Panels 6

1.3.1 Terminal Front and Rear Panels 6

1.3.1.1 PG Terminal Front Panel 6

1.3.1.2 PG Terminal Rear Panel 6

1.3.2 Remote Electronics Module Rear Panel 7

1.3.3 Base Rear Panel 8

2. Installation 9

2.1 Unpacking And Inspection 9

2.1.1 Removing From Packaging 9

2.1.1.1 Platform 9

2.1.1.2 Manual Mass Set 9

2.1.1.3 Piston-Cylinder Assembly (PG9607) 10

2.1.1.4 Vacuum Reference Hardware (Optional) 10

2.1.1.5 AMH Automated Mass Handler (Optional) 10

2.1.1.6 AMH Mass Set (Optional) 10

2.1.2 Inspecting Contents 11

2.1.2.1 Platform 11

2.1.2.2 Mass Set 12

2.1.2.3 Piston-cylinder Assembly 13

2.1.2.4 Vacuum Reference (Optional) 14

2.1.2.5 Automated Mass Handler (Optional) 15

2.2 Site Requirements 15

2.3 Setup 17

2.3.1 Preparing for Operation 17

2.3.1.1 Setting Up the Platform 17

2.3.1.2 System Pressure Interconnections 17

2.3.1.3 Setting Up A Manual Mass Set 18

2.3.1.4 Setting Up An AMH Automated Mass Handler (Optional) 19

2.3.1.5 Setting Up an AMH Mass Set 20

2.3.1.6 Setting Up Vacuum Reference Hardware (Optional) 22

2.3.2 Installing and Removing a PG9607 Piston-Cylinder Assembly 23

2.4 Power Up And Verification 26

2.4.1 Power Up 26

2.4.2 Check That On-board Piston-Cylinder Module And Mass Set Information Are Correct 26

2.4.3 Set Local Gravity Value 26

2.4.4 Setup Pressure Equation Variable Input Sources 26

2.4.5 Check Proper Operation Of Ambient Condition Measurements 27

2.4.6 Apply Pressure To The Piston-Cylinder Module 27

2.4.7 Check Proper Behavior Of Motorized Piston Rotation 28

 © 1998-2010 Fluke Calibration

원문: Fluke Calibration PG9602/9607 메뉴얼(영문) · 제조사 원문 자료입니다. 사양은 제조사 사정에 따라 변경될 수 있습니다.

TABLE OF CONTENTS

2.4.8 Check Proper Operation Of Piston Behavior Measurements ... 28
2.4.9 Verify Vacuum Reference ... 28
2.4.10 AMH Start Up/Verification ... 29
2.4.11 Check Automated Pressure Generation (If Present) ... 30
2.4.12 Check/Set Security Level ... 30
2.4.13 Additional Precautions to Take Before Making Pressure Measurements ... 31
2.5 Short Term Storage ... 31

3. General Operation ... 33

3.1 Fundamental Operating Principles ... 33
3.2 Keypad Layout And Protocol ... 34
3.3 Sounds ... 35
3.4 Pressure Ready/Not Ready Indication ... 35
3.4.1 Piston Position *Ready/Not Ready* ... 36
3.4.2 Piston Rotation *Ready/Not Ready* ... 36
3.4.3 Vacuum Reference *Ready/Not Ready* ... 37
3.5 Piston Position ... 37
3.6 Manual Mass Loading ... 38
3.7 AMH Mass Loading ... 40
3.7.1 Operating Principals ... 40
3.7.2 AMH Operation ... 42
3.7.2.1 Installing an AMH Mass Handler on the PG9000 Platform ... 43
3.7.2.2 Removing a Mass Handler from the PG9000 Platform ... 45
3.7.2.3 AMH Mass to Pressure or Pressure to Mass Operation ... 45
3.7.2.4 Direct Control of AMH Functions ... 46
3.7.2.5 Making and Breaking Reference Vacuum with AMH ... 46
3.7.2.6 Accessing the PG9000 Piston-Cylinder Module with AMH ... 46
3.7.2.7 AMH Indicator LED ... 47
3.7.2.8 AMH Error Messages ... 47
3.8 Controlled Clearance Pressure (PG9607) ... 49
3.9 Main Run Screen ... 50
3.10 General Function/Menu Flow Chart ... 51
3.11 Direct Function Keys ... 51
3.11.1 Direct Function Keys Summary ... 51
3.11.2 [P-C] ... 52
3.11.3 [UNIT] ... 53
3.11.3.1 Customizing Pressure Units Available Under the UNIT Function ... 54
3.11.4 [MODE] ... 55
3.11.4.1 Differential Measurement Mode ... 56
3.11.5 [SYSTEM] ... 63
3.11.5.1 First System Run Screen ... 64
3.11.5.2 Second System Run Screen ... 64
3.11.5.3 Third System Run Screen ... 65
3.11.6 [AMBIENT] ... 66
3.11.7 [HEAD] ... 67
3.11.8 [ROTATE] ... 69
3.11.8.1 <2Pre-Decel> ... 70
3.11.9 [GEN] (Optional) ... 71
3.11.9.1 <2target> ... 73
3.11.9.2 <3raise> ... 73
3.11.9.3 <4UL> ... 73
3.11.9.4 <5tol> ... 73
3.11.9.5 <6refloat> ... 74
3.11.10 [RES] ... 74
3.11.11 [ENTER/SET P] From Run Screen ... 76
3.11.11.1 [ENTER/SET P] In Pressure To Mass Mode ... 77
3.11.11.2 [ENTER/SET P] In Mass To Pressure Mode ... 78
3.11.11.3 Commands for zero pressure, ending a test ... 79
3.11.12 [P OR M] ... 79
3.11.13 [↻] and [↻], [←] ... 80
3.12 [SETUP] Menu ... 81
3.12.1 <1select> ... 82
3.12.2 <2view> ... 83
3.12.3 <3edit> ... 84
3.13 [SPECIAL] Menu ... 86
3.13.1 <1PC/MS> ... 87
3.13.1.1 Create a Piston-Cylinder Module ... 88

© 1998-2010 Fluke Calibration

원문: Fluke Calibration PG9602/9607 메뉴얼(영문) · 제조사 원문 자료입니다. 사양은 제조사 사정에 따라 변경될 수 있습니다.

3.13.1.2 Edit a Piston-Cylinder Module ... 90
3.13.1.3 View a Piston-Cylinder Module ... 90
3.13.1.4 Delete a Piston-Cylinder Module ... 91
3.13.1.5 Select The Active Piston-Cylinder Module ... 91
3.13.1.6 Add a Mass Set ... 92
3.13.1.7 Edit a Mass Set ... 96
3.13.1.8 View a Mass Set ... 96
3.13.1.9 Delete a Mass Set ... 96
3.13.1.10 Select Mass Set ... 96
3.13.1.11 Add a Mass Loading Bell ... 97
3.13.1.12 Edit a Mass Loading Bell ... 98
3.13.1.13 View a Mass Loading Bell ... 98
3.13.1.14 Delete A Mass Loading Bell ... 99
3.13.1.15 Select A Mass Loading Bell ... 99
3.13.2 <2presU> ... 99
3.13.3 <3head> ... 99
3.13.3.1 <3head>, <1fluid> ... 100
3.13.3.2 <3head>, <2unit> ... 101
3.13.3.3 <3head>, <3atm> ... 101
3.13.3.4 <3head>, <4piston> ... 101
3.13.4 <4prefs> ... 102
3.13.4.1 <4prefs>, <1ScrSvr> ... 102
3.13.4.2 <4prefs>, <2sound> ... 102
3.13.4.3 <4prefs>, <3time> ... 103
3.13.4.4 <4prefs>, <4ID> ... 103
3.13.4.5 <4prefs>, <5level> ... 104
3.13.5 <5remote> ... 106
3.13.5.1 COM1, COM2, COM3 and COM4 (RS232) ... 107
3.13.5.2 IEEE-488 ... 107
3.13.5.3 RS232 Self Test ... 108
3.13.5.4 External Barometer (RPM) Communications (COM2) ... 108
3.13.5.5 External Vacuum Gauge Communications (COM2) ... 110
3.13.6 <6gl> ... 112
3.13.7 <7cal> ... 113
3.13.8 <8AMH> ... 113
3.13.8.1 <2control>, <1up/down> ... 114
3.13.8.2 <2control>, <2discreet> ... 114
3.13.8.3 <2control>, <3loadall> ... 114
3.13.8.4 <2control>, <4unloadall> ... 115
3.13.9 <9reset> ... 115
3.13.9.1 <9reset>, <1sets> ... 115
3.13.9.2 <9reset>, <2units> ... 116
3.13.9.3 <9reset>, <3com> ... 116
3.13.9.4 <9reset>, <4cal> ... 116
3.13.9.5 <9reset>, <5setups> ... 117
3.13.9.6 <9reset>, <6all> ... 117

4. Remote Operation ... 119

4.1 Overview ... 119
4.2 Interfacing ... 119
4.2.1 RS232 interface ... 119
4.2.1.1 COM1 ... 119
4.2.1.2 COM2, COM3 and COM4 ... 120
4.2.2 IEEE-488 (GPIB) ... 120
4.3 Commands ... 121
4.3.1 Command Syntax ... 121
4.3.2 Command Summary ... 121
4.3.3 Error Messages ... 123
4.3.3.1 AMH Errors ... 124
4.3.4 Command descriptions ... 124
4.3.4.1 IEEE Std. 488.2 Common And Status Commands ... 124
4.3.4.2 PG9000 Commands ... 126
4.4 Status System ... 151
4.4.1 Status Reporting System ... 151
4.4.1.1 Status Byte Register ... 151
4.4.1.2 Standard Event Register ... 153

 © 1998-2010 Fluke Calibration

원문: Fluke Calibration PG9602/9607 메뉴얼(영문) · 제조사 원문 자료입니다. 사양은 제조사 사정에 따라 변경될 수 있습니다.

TABLE OF CONTENTS

5. Maintenance, Adjustments And Calibration 155

5.1 Introduction 155

5.2 Platform 156

5.2.1 Calibration/Adjustment Of On-board Measurement Functions 156

5.2.1.1 Principles 156

5.2.1.2 Barometric Pressure Sensor 156

5.2.1.3 Ambient Temperature sensor 157

5.2.1.4 Relative Humidity Sensor 158

5.2.1.5 Piston-Cylinder Module Temperature Sensors 158

5.2.1.6 Reference Vacuum Sensor (Optional) 160

5.2.2 Piston Position Detection Adjustment 160

5.2.3 Drive Belt Replacement 161

5.3 Piston-Cylinder Disassembly, Cleaning And Maintenance 162

5.3.1 Disassembly Of The PG9607 Piston Retaining Assembly 163

5.3.1.1 Disassembly Procedure 163

5.3.1.2 Reassembly Procedure 164

5.3.2 Cleaning (Other Than PG9607) 165

5.3.3 Cleaning (PG9607) 166

5.3.4 Recalibration 167

5.3.4.1 Updating Piston-Cylinder Module Files 167

5.4 Mass Sets 167

5.4.1 Cleaning 167

5.4.2 Recalibration 167

5.5 Reloading Embedded Software Into PG9000 Flash Memory 167

5.6 Disassembly And Reassembly Of PG9000 168

5.6.1 Platform 168

5.6.2 Terminal 168

5.6.3 AMH Automated Mass Handler Removal 168

6. Troubleshooting 169

6.1 Overview 169

7. Appendix 173

7.1 Conversion Of Numerical Values 173

7.1.1 Pressure 173

7.2 Defined Pressure Calculations 173

7.2.1 Calculations 175

7.2.2 Fluid Heads 176

7.2.2.1 Fluid Head Components 176

7.2.2.2 Overall Fluid Head Correction 177

7.3 Glossary 178

7.4 Limited Warranty And Limitation Of Liability 180

© 1998-2010 Fluke Calibration

원문: Fluke Calibration PG9602/9607 메뉴얼(영문) · 제조사 원문 자료입니다. 사양은 제조사 사정에 따라 변경될 수 있습니다.

Tables

Table 1. PG9607 Parts List 11
Table 2. Manual Mass Set Parts List (excluding 80 and 100 kg) 12
Table 3. Manual Mass Set Parts List (80 and 100 kg) 12
Table 4. AMH-100 Mass Set Parts List 12
Table 5. Mass Set Compositions 13
Table 6. 50 mm Gas Piston-Cylinder Assembly Parts List 13
Table 7. PG9000 Vacuum Reference Hardware 14
Table 8. AHM-100-VAC Parts List 15
Table 9. Drive Air Pressure Requirement by Mass Set 16
Table 10. AMH Errors 48
Table 11. Summary of PG9000 Direct Function Key Operations 52
Table 12. Pressure Units of Measure Available 55
Table 13. Valve Settings for Setting Differential Mode Static Pressure 59
Table 14. Valve Settings to Apply PG9000 Pressure to the RPM for Differential Mode Offsetting 60
Table 15. Valve Settings for Operating in Differential Mode 62
Table 16. SETUP File Choices, Factory Preferred Choice and Normal Value 82
Table 17. Security Levels - Functions NOT Executed Per Function/Level 105
Table 18. COM1, COM2, COM3 and COM4 Available Settings 107
Table 19. COM1 DB-9F Pin Designation 120
Table 20. COM2, COM3 and COM4 DB-9M Pin Designation 120
Table 21. Command Summary 121
Table 22. Error Messages 123
Table 23. Status Byte Register 151
Table 24. Standard Event Register 153
Table 25. PG9000 Troubleshooting Checklist 169
Table 26. Pressure Unit of Measure Conversions 173
Table 27. PG9000 Defined Pressure Calculation Variables 174
Table 28. Fluke Calibration Authorized Service Providers 181

© 1998-2010 Fluke Calibration

원문: Fluke Calibration PG9602/9607 메뉴얼(영문) · 제조사 원문 자료입니다. 사양은 제조사 사정에 따라 변경될 수 있습니다.

Figures

Figure 1. PG Terminal Front Panel 6
Figure 2. PG Terminal Rear Panel 7
Figure 3. PG9000 Remote Electronics Module Rear Panel 7
Figure 4. PG9000 Base Rear Panel (PG9607 shown) 8
Figure 5. AMH Mass Set 21
Figure 6. PG9607 Piston-Cylinder Installation 25
Figure 7. Piston Gauge Operating Principle 33
Figure 8. PG9000 Keypad Layout 34
Figure 9. Piston Stroke and Zones 38
Figure 10. AMH Schematic/Operating Principle 42
Figure 11. AMH Installation on PG9000 Platform 43
Figure 12. AMH Indicator location 47
Figure 13. Run Screen Flow Chart 51
Figure 14. Differential Mode Controller Schematic 58
Figure 15. PG9000 Platform Reference Level Location 68
Figure 16. Status Byte Register 151
Figure 17. Piston Retainer Assembly 164
Figure 18. Gas Operated, Gas Lubricated Piston-Cylinder Module Lubrication Chart 165

© 1998-2010 Fluke Calibration

원문: Fluke Calibration PG9602/9607 메뉴얼(영문) · 제조사 원문 자료입니다. 사양은 제조사 사정에 따라 변경될 수 있습니다.

About This Manual

This manual provides the user with the information necessary to operate the PG9000 Piston Gauge. It also includes a great deal of additional information provided to help optimize PG9000 use and take full advantage of its many features and functions.

Before using the manual, take a moment to become familiar with the Table of Contents structure. All first time PG9000 users should read Sections 1 and 2. Section 3 provides a comprehensive description of general PG9000 operating principles. Section 4 covers remote communication with an external computer. Section 5 provides maintenance and calibration information. Section 6 is a quick troubleshooting guide. Use the information in Section 6 to troubleshoot unexpected PG9000 behavior based on the symptoms of that behavior.

Certain words and expressions have specific meaning as they pertain to PG9000s. The Glossary (see Section 7) is useful as a quick reference for the definition of specific words and expressions as they are used in this manual.

Note

For those who "DON'T READ MANUALS", go directly to section 2.3 to set up the PG9000. Then go to section 2.4. This will get you running quickly with minimal risk of causing damage to yourself or your PG9000. Then… when you have questions or start to wonder about all the great features you might be missing, get into the manual!

Manual Conventions

⚠ Caution

"Caution" is used in throughout the manual to identify conditions or actions that could cause harm to the PG9000 or to the devices that are connected to the PG9000.

⚠ Warning

"Warning" is used in throughout the manual to identify actions that could pose a hazard to the user of the PG9000.

Note

"Note" is used throughout the manual to identify operating and applications advice and additional explanations.

[ ] indicates direct function keys (e.g., **[RANGE]**).

< > indicates PG9607 screen displays (e.g., **<1yes>**)

© 1998-2010 Fluke Calibration

원문: Fluke Calibration PG9602/9607 메뉴얼(영문) · 제조사 원문 자료입니다. 사양은 제조사 사정에 따라 변경될 수 있습니다.

Notes

원문: Fluke Calibration PG9602/9607 메뉴얼(영문) · 제조사 원문 자료입니다. 사양은 제조사 사정에 따라 변경될 수 있습니다.

1. Introduction

1.1 Product Overview

PG9000 Piston Gauges are reference level pressure standards that operate on the piston gauge principle. Pressure is defined by balancing it against the force exerted by a known mass accelerated by gravity on the effective area of a piston-cylinder.

A PG9000 piston gauge consists of the PG9000 Platform, a piston-cylinder module and a mass set. Optional hardware for vacuum reference operation is available. An optional automated mass handling system is available as well. A PG9000 system typically also includes the means to generate and adjust pressures and to interconnect the system components and a device being calibrated or tested. The pressure generation component can be manual or automated. COMPASS® for Pressure software may also be included to assist in executing test sequences, acquiring test data and producing test reports.

The PG9000 Platform consists of the PG9000 Base, Terminal and Remote Electronics Module. Local user interface is through the keypad and display on the terminal. Remote communications and all on board (built in) sensors are located inside or are connected to the Remote Electronics Module.

PG9000 is a family of piston gauges with common presentation and features. The first production model of the PG9000 family is the PG9607.

> PG9607 operates up to a maximum pressure of 500 kPa and supports definition of pressure against either atmosphere or vacuum reference using a gas operated, gas lubricated piston-cylinder module (PC-9607-5).
>
> PG9607 was designed to exploit a unique 50 mm diameter piston-cylinder. With this piston-cylinder, the piston is mounted in a fixed position in the mounting post and the cylinder floats and is rotated. A controlled clearance pressure can be introduced into the mounting post allowing the piston diameter and thus the gap between the piston and cylinder to be varied.
>
> PG9607 is available on a limited basis and, generally, is only offered for use in national measurement institutes or other laboratories performing fundamental research in pressure metrology.

PG9000 platform, piston-cylinder module, mass set and optional automated mass handling system are designed to maximize metrological performance and ease of operation. They include many features that enhance the fundamental precision and stability of pressure measurements as well as simplifying use and reducing operator influence on the measurements. Extensive monitoring and controlling capability and advanced local and remote user interfaces are integrated into the PG9000 Platform.

Operator interaction with PG9000 and its extensive capabilities and peripherals is accomplished through a single display and keypad on the PG Terminal or from a computer via a single standard RS232 or IEEE-488 interface.

© 1998-2010 Fluke Calibration

원문: Fluke Calibration PG9602/9607 메뉴얼(영문) · 제조사 원문 자료입니다. 사양은 제조사 사정에 따라 변경될 수 있습니다.

1.2 Specifications

1.2.1 General Specifications

Power Requirements	50/60 Hz, 60 VA max. consumption. 100 to 240 VAC, operating altitude: <2000m 100 to 150 VAC, operating altitude: <5000m
Operating Temperature Range	15 to 35 °C
Operating Humidity Range	5 to 95% R.H., non-condensing
Weight ***Instrument platform with no mass or piston-cylinder loaded.***	
PG9607 (without vacuum hardware)	34 kg (74 lb)
Remote Electronics Module	1.9 kg (4 lb)
PG Terminal	1.4 kg (3 lb)
Optional Vacuum Reference Hardware	16 kg (36 lb)
Dimensions	
PG9607 Base (without vacuum hardware)	34.1 cm H x 54.3 cm W x 52.3 cm D (13.4 in x 21.4 in x 20.6 in) (Height: top of piston-cylinder assembly)
PG9607 Base (with optional vacuum bell jar and vacuum gauge connected)	56 cm H x 54.3 cm W x 52.3 cm D (22 in x 21.4 in x 20.6 in) (Height: Top of bell jar)
Remote Electronics Module	10.2 cm H x 35.1 cm W x 19.6 cm D (4 in. 13.8 in. x 7.7 in.)
PG Terminal	12 cm H x 15 cm W x 20 cm D (4.7 in. H x 5.9 in. W x 7.9 in. D)
Microprocessors	
Instrument Platform	Motorola 68302
PG Terminal	Hitachi 64180
Communication Ports	
RS232	COM1: Host computer COM2: Residual vacuum sensor (external) COM3: Automated pressure generator/controller
IEEE-488	COM4: Unused/spare or pass through Host computer
Fuses	PEM Fuse: 1A, 250V, 5x20mm, Slow blow Internal power supply Fuse: 3.15A, 250V
Overall Pressure Range	Gauge: 10.5 kPa to 500 kPa (1.5 to 72.5 psi) Absolute: 10.5 kPa to 500 kPa (1.5 to 72.5 psi) Differential: - 89.5 to 400 kPa (-13 to 58 psi) at 10.5 to 110 kPaa (1.5 to 16 psia) static pressure
Operating Media	Gas: nitrogen, helium, dry air (dewpoint ≤ -40 °C)
Maximum Mass Load	100 kg1 [1]MS-AMH-100 mass set contains approximately 104.5 kg of mass. Combined with the piston or cylinder and bell assembly, total mass loads may be up to 106 kg resulting in pressures of up to 530 kPa. (76.9 psi)

© 1998-2010 Fluke Calibration

원문: Fluke Calibration PG9602/9607 메뉴얼(영문) · 제조사 원문 자료입니다. 사양은 제조사 사정에 따라 변경될 수 있습니다.

Pressure Connections		
	PG 9607 Base	Test port: : DH200 Controlled Clearance Pressure: DH200
	AMH Drive	Quick connector equivalent to Swagelok QM Series (QM2-B-200), Use with DESO (double end shut off) type stem
	AMH Vent	Quick connector equivalent to Swagelok QM Series (QM2-B-200), Use with SESO (single end shut off) type stem only.
		Note **DH200 and DH500 are gland and collar type fittings for 1/4 in. (6.35 mm) coned and left hand threaded tubes. DH200 is equivalent to AE SF250C, HIP LF4, etc. DH500 is equivalent to AE F250C, HIP HF4, etc.**
	Remote Electronics Module	ATM port: 10-32 UNF
	Vacuum Bell Jar	3x KF40, 1x KF50 (top)
CE Conformance		All PG9000 models conform to CE requirements and are CE marked.

1.2.1.1 AMH Automated Mass Handler (Optional)

Power Requirements:		15 VDC @ 2 A, 30 W max. consumption
Operating Temperature:		15 to 35 ºC
Dimensions:		41 cm H x 41 cm W x 36 cm D (16.3 in. x 16.1 in. x 14.1 in.)
Weight:		12 kg (25 lbs)
Power/Communications:		Custom 8 pin connector
AMH Drive Air Supply:		550 kPa (80 psi), ± 10%, minimal flow
AMH Vacuum Supply:		At least 50 kPa (7.5 pi) under atmosphere, minimal flow
Pressure Connections:	Pressure:	Quick connector DESO (double end shut off) type stem
	Vacuum:	Quick connector SESO (single end shut off) type stem
CE conformance:		Available, must be specified

1.2.1.2 Embedded Features

- Local control with 2 x 20 vacuum fluorescent display and 4 x 4 function driven keypad.
- Real time (1 second update rate) display and measurement of ambient (pressure, temperature, humidity) and instrument (piston-cylinder temperature, piston position, piston drop rate, piston rotation rate, piston rotation decay rate, reference vacuum) conditions.
- Real time (1 second update rate) mass-to-pressure and pressure-to-mass calculations taking into consideration all environmental and operational variables.
- Full gas and liquid fluid head corrections including DUT head correction and piston position head correction. Barometer head correction included for atmosphere reference operation (gauge mode).
- Adjustable mass loading resolution (0.01 g to 0.1 kg).
- Audible prompts of instrument status (piston movement, *Ready/Not Ready* indication) with override capability.
- Integrated automated mass handling option (AMH-100-VAC).
- Interfacing and automatic exploitation of external barometer via RS232.
- Interfacing and automatic exploitation of any external vacuum gauge via RS232.
- Automated differential mode to define low differential pressures at various static pressures between vacuum and two atmospheres.
- Storage and one step activation of metrological data on up to 18 piston-cylinder modules, (3) mass sets and (3) mass loading bells.

© 1998-2010 Fluke Calibration

원문: Fluke Calibration PG9602/9607 메뉴얼(영문) · 제조사 원문 자료입니다. 사양은 제조사 사정에 따라 변경될 수 있습니다.

we measure, we calibrate, we validate.
㈜테솔 · www.tessol.com TS-TL-FLK-082 13 / 192
KOLAS 국제공인교정기관 · ISO/IEC 17025

TS-TL-FLK-082

- Continuous pressure *Ready/Not Ready* indication based on measured conditions.
- Motorized, intelligent piston drive system based measured rotation rate with operator alert and manual override.
- Integrated automated pressure control with standard **Fluke Calibration** pressure controllers.
- Full RS232 and IEEE-488 communications with multi-level commands to set and read all instrument functions.

1.2.1.3 Ambient and Instrument Condition Measurements

Temperature	Ambient[1]	Piston Cylinder Module
Range	0 to 40 °C	0 to 40 °C
Resolution	0.1 °C	0.01 °C
Measurement Uncertainty	± 1 °C	± 0.1 °C

Barometric Pressure with Internal Sensor	
Range	70 to 110 kPa
Resolution	10 Pa
Measurement Uncertainty	± 140 Pa
	Barometric pressure can also be read automatically with any RS232 device such as a **DH Intruments** RPM.

Relative Humidity[1]	
Range	5 to 95 % RH
Resolution	1 % RH
Measurement Uncertainty	± 10 % RH

Piston Position	
Range	± 4.5 mm
Resolution	0.1 mm
Measurement Uncertainty	± 0.2 mm

Piston Rotation (Rate and deceleration)	
Range	2 to 99 rpm
Resolution	1 rpm

Vacuum (Optional)	
Range	0 to 13 Pa
Resolution	0.01 Pa
Measurement Uncertainty	± 0.05 Pa + 0.5 % of reading

[1]PG9000 uses a Fluke Hart Scientific 2626-S temperature and humidity probe specified and factory calibrated to deliver ±0.25 ˚ C uncertainty on temperature and ±3% on relative humidity. PG9000 performance requirements and factory calibration services require only the specifications listed above to meet stated product uncertainties.

원문: Fluke Calibration PG9602/9607 메뉴얼(영문) · 제조사 원문 자료입니다. 사양은 제조사 사정에 따라 변경될 수 있습니다.

1.2.2 Piston-Cylinder Assembly (PC-9607-5)

The piston is mounted in a fixed position on the mounting post. The cylinder floats and is rotated.

Piston Material:	Tungsten carbide
Cylinder Material:	Tungsten carbide
Nominal Diameter:	50 mm
Nominal Area:	2 000 mm^2
Mounting System:	Free deformation with controlled clearance pressure (CCP) available on inside of piston.
Typical Drop Rate:	< 0.25 mm/min at 500 kPa (Full mass load)

1.2.3 Mass Sets

All masses are delivered in molded, reusable, transit cases with custom inserts.

Masses > 50g	
Material	304L non-magnetic stainless steel
Finish	Electropolished
Adjustment Tolerance	± 20 ppm of nominal value (manual mass sets, AMH automated mass handler mass sets do not have fixed adjustment tolerances)
Uncertainty of Measured Values	± 5 ppm or 1 mg, whichever is greater
Masses < 50g	± 1 mg

1.2.4 Pressure Measurements (PG9607)

Note

For uncertainty in piston-cylinder effective area and typical measurement uncertainty in pressure defined by the piston gauge, see the piston-cylinder calibration report and current revision of Fluke Calibration Technical Note 0180TN12.

The piston is mounted in a fixed position on the mounting post. The cylinder floats and is rotated.

Sensitivity[1]:	0.005 Pa + 0.5 ppm
Reproducibility[2]:	± 2 ppm + 0.05 Pa

[1] Sensitivity: The smallest variation in input detectable in output.
[2] Reproducibility: The root sum square of the stability of effective area and stability of the AMH-100 mass set for 1 year. Refer to Fluke Calibration Technical Note 0180TN12.

© 1998-2010 Fluke Calibration

원문: Fluke Calibration PG9602/9607 메뉴얼(영문) · 제조사 원문 자료입니다. 사양은 제조사 사정에 따라 변경될 수 있습니다.

we measure, we calibrate, we validate.
㈜테솔 · www.tessol.com TS-TL-FLK-082 15 / 192
KOLAS 국제공인교정기관 · ISO/IEC 17025

TS-TL-FLK-082

1.3 Front and Rear Panels

1.3.1 Terminal Front and Rear Panels

1.3.1.1 PG Terminal Front Panel

The front panel assembly provides a 2 x 20 vacuum fluorescent display and a 4 x 4 membrane keypad for local user interface. The terminal front panel assembly is the same for all PG9000 models.

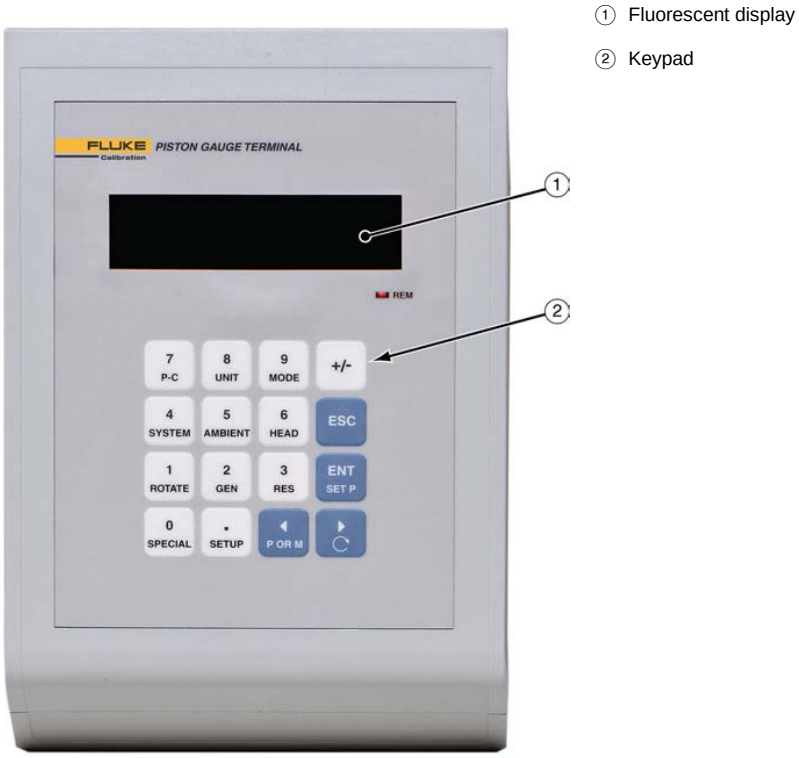

Figure 1. PG Terminal Front Panel

1.3.1.2 PG Terminal Rear Panel

The rear panel assembly provides the communications connection to the PG9000 Remote Electronics Module. The terminal rear panel assembly is the same for all PG9000 models.

원문: Fluke Calibration PG9602/9607 메뉴얼(영문) · 제조사 원문 자료입니다. 사양은 제조사 사정에 따라 변경될 수 있습니다.

① Power switch
② Fuse
③ Power receptacle
④ Connector for 25 pin cable to PG Remote Electronics Module
⑤ Cooling fan

Figure 2. PG Terminal Rear Panel

1.3.2 Remote Electronics Module Rear Panel

The PG9000 Remote Electronics Module houses all working electronics (processor, sensor and communications) for the PG9000 in addition to sensors for ambient conditions (temperature, pressure and humidity).

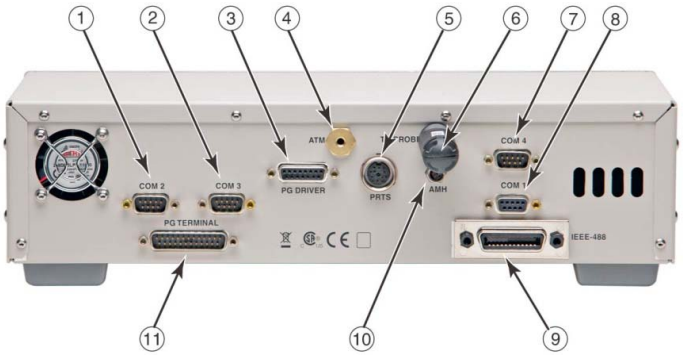

① COM 2 (RS232) – External Barometer, External Vacuum Gauge and Pass through Communication
② COM 3 (RS232) – Automated Pressure Generation/Control Component
③ PG DRIVER – 15 pin Cable to PG Base
④ ATM Connection (Barometer)
⑤ Mounting Post PRT Connector to PG Remote Electronics Module
⑥ TH Probe Connector
⑦ COM 4 (RS232) – Pass Through
⑧ COM 1 (RS232) – Remote Host Communications
⑨ IEEE-488 – Remote Host Communications
⑩ AMH Connection
⑪ Connector for 25 pin Cable to PG TERMINAL

Figure 3. PG9000 Remote Electronics Module Rear Panel

© 1998-2010 Fluke Calibration

원문: Fluke Calibration PG9602/9607 메뉴얼(영문) · 제조사 원문 자료입니다. 사양은 제조사 사정에 따라 변경될 수 있습니다.

1.3.3 Base Rear Panel

The PG9000 Platform rear panel provides the communications connection to the PG Remote Electronics Module, test and controlled clearance pressure connections as well as (optional) AMH Automated Mass Handler connections.

① PG Driver – to PG Remote Electronics Module
② AMH Connection
③ AMH Vent Port
④ Controlled Clearance Pressure Port – PG9607 Only
⑤ TEST Pressure Port
⑥ AMH Drive Pressure Port
⑦ PRT Connector – to Remote Electronics Module

Figure 4. PG9000 Base Rear Panel (PG9607 shown)

원문: Fluke Calibration PG9602/9607 메뉴얼(영문) · 제조사 원문 자료입니다. 사양은 제조사 사정에 따라 변경될 수 있습니다.

we measure, we calibrate, we validate.
KOLAS 국제공인교정기관 · ISO/IEC 17025

2. Installation

2.1 Unpacking And Inspection

2.1.1 Removing From Packaging

A typical PG9000 system includes the PG9000 Platform (see Section 2.1.1.1), a mass set (see Section 2.1.1.2), a piston-cylinder assembly (see Section 2.1.1.3) and other accessories such as vacuum reference hardware (see Section 2.1.1.4), an AMH automated mass handler (see Section 2.1.1.5) and/or pressure generation and control components (see the accessory Operation and Maintenance Manual or Instruction Sheet).

2.1.1.1 Platform

The PG9000 Platform consists of the PG9000 Base, Remote Electronics Module, Terminal and interconnect accessories. The Base is shipped in a custom wooden crate. The Platform components are shipped in a reusable, molded shipping and storage case. The cables and accessories are shipped in a corrugated container with other PG9000 accessories including operating instructions and calibration reports.

❶ Open the PG9000 Base shipping crate (71 cm x 71 cm x 56 cm).

❷ Carefully lift the PG9000 Base from its position in the lower packing insert. Note the orientation so that the same orientation will be used when PG9000 is repacked.

⚠ Warning

The PG9000 Base has a mass of 34 kg (74 lb). It is recommended to remove it from the packaging with two people on opposite sides of the shipping container. Removing or lifting with only one person may cause injury.

❸ Open the PG9000 molded, reusable recalibration transit case and the accessories corrugated shipping container.

❹ Remove the PG Terminal, Remote Electronics Module and Temperature-Humidity Probe from the recalibration transit case and the Platform accessories from the shipping container. Inspect and inventory the accessories (see Section 2.1.2.1).

❺ Reinstall the packing inserts into the shipping and storage cases and store in a safe place.

2.1.1.2 Manual Mass Set

⚠ Caution

The stability over time of PG9000 pressure measurements is a function of the stability of the masses loaded on the cylinder. Precautions should be taken in handling the masses to minimize influences that may change their mass. This includes always wearing protective gloves when handling the masses to avoid contaminating them with body oils and perspiration. Protective gloves are provided in the accessory kits of PG9000 Platforms.

© 1998-2010 Fluke Calibration

원문: Fluke Calibration PG9602/9607 메뉴얼(영문) · 제조사 원문 자료입니다. 사양은 제조사 사정에 따라 변경될 수 있습니다.

The mass set accessories are shipped in a separate corrugated container. Open the corrugated container and inspect and inventory the accessories.

The PG9000 masses are shipped in reusable, molded shipping and storage cases. The PG9000 masses should be removed from their shipping cases and inventoried when setting up the PG9000 system (see Section 2.1.1.2 for mass set content detail).

The PG9000 manual mass bell ships in a separate corrugated container.

⚠ Caution

The mass loading bell is a metrological element that is part of the mass set. Like all of the masses, it is preferable not to handle it with bare hands. Protective gloves are provided in the accessory kit of each PG9000 Platform.

2.1.1.3 Piston-Cylinder Assembly (PG9607)

The PG9607 piston-cylinder assembly is shipped in a molded plastic case with custom polyethylene inserts that accommodates 2 Acetal bullet cases. The piston and the cylinder are separate; each is packed in its own bullet case. Do not handle either of these elements with bare hands. Use the gloves that are in the PG9000 accessory kit or use the lint free wipes. See Section 2.1.2.3 for details.

⚠ Caution

Never handle the piston or cylinder with bare hands. Oil and acids from bare skin can damage the critical surfaces (polished appearance).

2.1.1.4 Vacuum Reference Hardware (Optional)

The optional PG9000 Vacuum Reference Hardware includes the vacuum Bell Jar, reference vacuum sensor with power supply and interconnect cables and fittings necessary for vacuum operation.

The PG9000 Bell Jar is packed in a large wooden crate (66 cm x 66cm x 71 cm). The vacuum reference sensor, power supply and associated fittings and cables are packed in a reusable molded Vacuum Measurement Kit transit case. Remaining fittings and adaptors are shipped in the PG9000 accessories corrugated container (see Section 2.1.2.4).

2.1.1.5 AMH Automated Mass Handler (Optional)

AMH-100-VAC is delivered in a corrugated container with foam cut outs to hold items in place. Accessories are bagged together and packaged in a separate corrugated container with other PG9000 system accessories.

Remove all parts from the shipping boxes. See Section 2.1.2.5 for more detail.

2.1.1.6 AMH Mass Set (Optional)

PG9000 AMH masses are shipped in reusable, molded shipping and storage cases. One of the cases contains the binary masses, binary mass carrier, mass bell and lifting shaft/trim mass tray. The other cases contain the main masses of 10 kg (see Section 0 for mass set content detail). Each mass is packed in a sealed plastic bag and then placed in a protective shipping insert. The PG9000 AMH masses should be removed from their shipping cases and inventoried when setting up the PG9000 system (see Section 2.1.1.2 for mass set content detail).

원문: Fluke Calibration PG9602/9607 메뉴얼(영문) · 제조사 원문 자료입니다. 사양은 제조사 사정에 따라 변경될 수 있습니다.

TS-TL-FLK-082

we measure, we calibrate, we validate.
㈜테솔 · www.tessol.com TS-TL-FLK-082 20 / 192
KOLAS 국제공인교정기관 · ISO/IEC 17025

⚠ Caution

The stability over time of PG9000 pressure measurements is a function of the stability of the masses loaded on the piston. Precautions should be taken in handling the masses to minimize influences that may change their mass. This includes always wearing protective gloves when handling the masses to avoid contaminating them with body oils and perspiration. Protective gloves are provided in the accessory kits of PG9000 Platforms.

2.1.2 Inspecting Contents

Inspect all parts for damage. If damage is noted, report it to your Shipping & Receiving Department and the delivering carrier for appropriate action.

Inspect for any missing components or accessories referring to Tables 1-8. Should any items be missing, contact **Fluke Calibration** or your local **Fluke Calibration** representative.

A parts list of items supplied is provided in Section 2.1.2.1 for PG9000 Platform, Section 2.1.2.2 for mass sets, Section 2.1.2.3 for Piston-Cylinder Assemblies, Section 2.1.2.4 for (optional) vacuum reference hardware and Section 2.1.2.5 for (optional) Automated Mass Handler.

2.1.2.1 Platform

Each PG9000 Platform is delivered complete with accessories as listed by part number in Table 1.

Table 1. PG9607 Parts List

	PG9607 PLATFORM 3821488
Base	3789373
Terminal	3789710
Remote Electronics Module	3789425
Transit case for recalibration items	3841097
Accessory Kit	**3841024**
ADPT, DH200 M X 1/8 in. swage	3069062
(2) NIP, SS, DH200, 2.75"	3068377
(2) ADPT, SS, DH200 F X 1/8 in. NPT F	3068547
ADPT, SS, DH200 M X 1/4 in. swage	3069081
Tee, SS, 1/4 in. swage	3138683
Union, SS, 1/4 in. swage x 1/8 in. swage	3135076
ADPT, SS, 1/4 in. swage x 1/8 in. NPT F	3141914
ADPT, SS, 1/8 in. NPT M x 1/8 in swage	3068564
ADPT, 10-32UNF x 1/8 in. Swage	3141516
1/8" tubing, PFA, 2 m	3232357
(2) 1/4 in. tubing, SS, 10 cm	3853024
1/4 in. tubing, SS, 20 cm	3853036
1/4 in. tubing, SS, 50 cm	3853049
1/8 in. tubing, SS, 30 cm	3852995
1/8 in. tubing, SS, 150 cm	3853008
(2) O-ring, Viton, brown, 2-029	3144730
O-ring, Viton, brown, 2-019	3134945
(2) O-ring, Buna, 2-242	3135041
Allen wrench, 2.5 mm	3136044
Allen wrench, 3 mm	3135703
Allen wrench, 5 mm	3136098

© 1998-2010 Fluke Calibration

원문: Fluke Calibration PG9602/9607 메뉴얼(영문) · 제조사 원문 자료입니다. 사양은 제조사 사정에 따라 변경될 수 있습니다.

TS-TL-FLK-082

we measure, we calibrate, we validate.
㈜테솔 · www.tessol.com TS-TL-FLK-082 21 / 192
KOLAS 국제공인교정기관 · ISO/IEC 17025

Krytox™ GPL205/6 0.5 oz	2493420
Gift kit with gloves	3123777
Terminal to Platform Cable (DB25M – DB25F)	3068724
PRT Cable, PG Platform	3778220
TH Probe Cable	3837033
Driver Cable, PG Platform	3068683
Power Cable – US	3133781
Power Cable – UK	3153005
Documentation	
Calibration Report (PG)	3152121
Technical Data	3152139
Manual	3782240
Documentation CD	3139043

2.1.2.2 Mass Set

PG9000 mass sets are composed of different combinations of individual masses and accessories depending on the specific mass set ordered (see Tables 2 - 5).

Table 2. Manual Mass Set Parts List (excluding 80 and 100 kg)

DESCRIPTION	PART NO.	
Mass Set	Refer to Table 5	
Reusable Molded Transit Case with Foam Inserts	3068969	3068991
35 kg set	1 ea.	1 ea.
40 kg set	1 ea.	1 ea.
45 kg set	1 ea.	1 ea.
55 kg set	1 ea.	2 ea.
Mass Set Storage Tray and Spindle	3147461 and 3148764	
Dust Covers	3138017 and 3138130	
Calibration Report	3152121	

Table 3. Manual Mass Set Parts List (80 and 100 kg)

DESCRIPTION	PART NO.	
Mass Set	Refer to Table 5	
Reusable Molded Transit Case with Foam Inserts	3068969	3068984
80 kg set	1 ea.	2 ea.
100 kg set	1 ea.	3 ea.
Mass Set Storage Tray and Spindle	3147461 and 3148764	
Dust Covers	3138017 and 3138127	
Calibration Report	3152121	

Table 4. AMH-100 Mass Set Parts List

DESCRIPTION	PART NO.	
Mass Set	Refer to Table 5	
Reusable Molded Transit Case with Foam Inserts	3123990	3068984
40 kg set (MS-AMH-40)	1 ea.	1 ea.
60 kg set (MS-AMH-60)	1 ea.	2 ea.
80 kg set (MS-AMH-80)	1 ea.	2 ea.
100 kg set (MS-AMH-100)	1 ea.	3 ea.
Calibration Report	3152121	

원문: Fluke Calibration PG9602/9607 메뉴얼(영문) · 제조사 원문 자료입니다. 사양은 제조사 사정에 따라 변경될 수 있습니다.

TS-TL-FLK-082

we measure, we calibrate, we validate.
KOLAS 국제공인교정기관 · ISO/IEC 17025
㈜테솔 · www.tessol.com TS-TL-FLK-082 22 / 192

Table 5. Mass Set Compositions

DESIGNATION	PART #	NOMINAL TOTAL MASS (kg)	MASS SET COMPOSITION								
			10 kg	5 kg	2 kg	1 kg	0.5 kg	0.2 kg	0.1 kg	MAKE-UP MASS (kg)	
MS-7002-35	3069861	35	-	5	2	1	1	2	1	1 (4)	-
MS-7002-40	3070021	40	-	6	2	1	1	2	1	1 (4)	-
MS-7002-45	3069980	45	-	7	2	1	1	2	1	1 (4)	-
MS-7002-55	3069877	55	-	9	2	1	1	2	1	1 (4)	-
MS-7002-80	3070000	80	6	1	2	1	1	2	1	1 (9)	-
MS-7002-100	3070017	100	8	1	2	1	1	2	1	1 (9)	-
DESIGNATION	**PART #**	**NOMINAL TOTAL MASS (kg)**	**MASS SET COMPOSITION**								
			10 kg	**6.4 kg**	**6.2 kg**	**3.2 kg**	**1.6 kg**	**0.8 kg**	**0.4 kg**	**0.2 kg**	**0.1 kg**	**BELL, SHAFT, BINARY MASS CARRIER (3 PARTS)**
MS-AMH-40	3071528	40	3	1	-	1	1	1	1	1	1	1
MS-AMH-60	3071519	60	5	1	-	1	1	1	1	1	1	1
MS-AMH-80	3071504	80	7	1	-	1	1	1	1	1	1	1
MS-AMH-100	3071440	100	9	1	-	1	1	1	1	1	1	1

All mass sets also include a trim mass set of 50 g to 0.01 g (total 100 g)

Note

The mass loading bell and piston make up part of the total mass load. The mass loading bell for loading manual mass sets is ordered and shipped separately. The mass loading bell for AMH mass sets is delivered with the mass set.

2.1.2.3 Piston-cylinder Assembly

Table 6. 50 mm Gas Piston-Cylinder Assembly Parts List

	5 kPa/kg PC-9607-5
Piston-cylinder kit	**3782028**
Piston-cylinder	3782004
Piston-cylinder case (w/ 2 bullet cases)	3781999
Accessory Kit	**3118500**
(2) O-rings, brown, Viton (2-015)	3134923
Documentation	
Calibration report	3152121

⚠ Caution

Never handle the piston or cylinder with bare hands. Oil and acids from bare skin can damage the critical surfaces (polished appearance).

© 1998-2010 Fluke Calibration

원문: Fluke Calibration PG9602/9607 메뉴얼(영문) · 제조사 원문 자료입니다. 사양은 제조사 사정에 따라 변경될 수 있습니다.

we measure, we calibrate, we validate.
KOLAS 국제공인교정기관 · ISO/IEC 17025
㈜테솔 · www.tessol.com TS-TL-FLK-082 23 / 192

TS-TL-FLK-082

2.1.2.4 Vacuum Reference (Optional)

Table 7. PG9000 Vacuum Reference Hardware

	PG9000 Vacuum Reference Hardware 3821513
Vacuum Measurement Kit	**3840203**
CDG Power Supply	3142866
CDG Cable, 10 ft.	3142875
RS232 Cable, 10 ft.	3142882
KF40 Centering Rng with Viton O-ring	3140217
KF40 Clamp	3140221
KF40 to KF16 Reducer	3142990
KF16 Elbow	3836205
CDG with manual valve – assembled with centering ring and clamp	**3841484**
(2) KF16 Centering Ring with Viton O-ring	3134540
(2) KF16 Clamp	3138978
Transit Case for Vacuum Measurement Kit	3841085
Bell Jar	**3478417**
Bell Jar Gasket	**3788743**
Vacuum Vent Valve and Fittings	**3841060**
(2) KF40 Clamp	3140221
KF40 Blank Off Cap	3140671
KF40 Centering Ring with SS Screen	3142830
KF40 Centering Ring with Viton O-ring	3140217
KF40 to KF16 Reducer	3142990
KF16 Clamp	3138978
Vent Valve, KF10	3139838
KF10/16 Centering Ring, Viton, with Viton O-ring	3133103
KF50 Blank Off Cap	3836143
KF50 Centering Ring	3836162
KF50 Clamp	3836170

⚠ Caution

The vacuum sensor (CDG) is assembled to an isolation valve in order to store and/or transport in an evacuated condition. In order to assure performance within specifications, open the valve only when the pressure in the attached vacuum chamber is below 500 Pa and close the valve before increasing the chamber pressure from vacuum.

원문: Fluke Calibration PG9602/9607 메뉴얼(영문) · 제조사 원문 자료입니다. 사양은 제조사 사정에 따라 변경될 수 있습니다.

we measure, we calibrate, we validate.
KOLAS 국제공인교정기관 · ISO/IEC 17025

2.1.2.5 Automated Mass Handler (Optional)

Table 8. AHM-100-VAC Parts List

DESCRIPTION		PART #
1 ea.	AHM-100-VAC Automated Mass Handler	3821508
Accessory kit including:		**3841402**
1 ea.	Power/Comm Cable	3843744
2 m	1/8 in. PFA tubing	3232357
2 m	1/4 in. PFA tubing	3232378
2 m	3/8 in. PFA tubing	3232445
1 ea.	3/8 in. Tee	3843090
1 ea.	Reducer, 1/4 in. Swage x 3/8 in. Swage	3843104
1 ea.	3/8 in. Port Connector	3843119
1 ea.	ADPT, 1/8 in. Swage x 1/4 in. NPTM	3135780
1 ea.	Quick Connector Stem, 1/8 in. Swage DESO (red band)	3123691
1 ea.	Quick Connector Assy, with valve, AMH VAC Port (blue band)	3121719
4 ea.	Cable Tie, Hook and Loop	2008964
1 ea.	3 mm Hex Wrench	3141776

2.2 Site Requirements

The exact PG9000 system installation is affected by the elements other than the PG9000 Platform that make up the PG9000 system.

When selecting and preparing a site to set up the PG9000 system, the following should be considered:

- **Ambient conditions:** To achieve optimum metrological performance, ambient conditions should be controlled and maintained within the following:
  - ***Temperature:*** 19 to 26 °C, minimize rate of change of temperature.
  - ***Relative Humidity:*** 5 to 95 %RH (non-condensing).
  - ***Ambient Pressure:*** Minimize external influences that will cause barometric instability.
  - ***Air Currents:*** Do not install the PG9000 Platform under a source of vertical air currents such as an overhead air conditioning duct. These can blow on the mass load and add unquantified forces.
  - ***Vibration:*** Minimize local vibration. Excessive vibration will reduce the stability of the pressures defined by PG9000 (vibration affects the floating piston). Excessive high frequency vibration, for example from a vacuum pump on the same table as the PG9000, may affect piston sensitivity.
- **Bench stability:** Up to 100 kg may be loaded and unloaded onto the PG9000 Platform. The bench on which the PG9000 sits should not deflect significantly under the mass load changes. This can be verified by setting the PG9000 Platform on the bench, leveling it, loading and unloading the complete mass set while observing whether the level setting changes.
- **Location of other components:** Plan the space required and a convenient layout for the complete PG9000 system including the PG Terminal, PG Remote Electronics Module, mass set, pressure generation/control component(s), test instrument connection and computer (if present). If using a **DH Intruments** PPC or MPC to generate/control pressure, see its Operation and Maintenance Manual for information on installing it. If a **DH Intruments** interconnections kit is being used to interconnect the components, see its instruction sheet.
- **Electrical and pressure supplies:** Plan the supply of electrical power to the PG Terminal and to the pressure generation/control component(s), if needed. If using a **DH Intruments** PPC or MPC to generate/control pressure, see its Operation and Maintenance Manual for information on the pressures source(s) it needs and how to connect them. Gas supplied to a PC-9000 piston-cylinder module must be clean and dry (instrument grade minimum, high purity preferred) to avoid contaminating the piston-cylinder gap.
- **Reference vacuum supply:** Plan for the vacuum connection to the optional bell jar and AMH automated mass handler and the location of the reference vacuum pump.

© 1998-2010 Fluke Calibration

원문: Fluke Calibration PG9602/9607 메뉴얼(영문) · 제조사 원문 자료입니다. 사양은 제조사 사정에 따라 변경될 수 있습니다.

TS-TL-FLK-082

we measure, we calibrate, we validate.
㈜테솔 · www.tessol.com TS-TL-FLK-082 25 / 192
KOLAS 국제공인교정기관 · ISO/IEC 17025

- **Bell jar (optional) placement:** Plan a location for the bell jar when it is removed from the platform to load and unload masses. A shelf is often used for this purpose.
- **AMH automated mass handler (optional):**
  - o Location: If an AMH is being used, consider that the AMH mass handler will occasionally be removed from the PG9000 Platform. A convenient place to put it down when it is removed should be planned.
  - o Drive air supply: The drive air supply provides power to operate the mass lifter and the binary mass selector pins (see Section 3.7.1).

    Drive air requirements:

    Flow rate: Very low, avoid restrictions or excessive length of connecting tubing

    Cleanliness: If air from a compressor is used it should be filtered and dried, preferably with a filter regulator with a coalescing filter. The recommendation is for a 5-micron filter upstream of a 0.01-micron coalescing filter. The main concern is the elimination of humidity, which could corrode the AMH pneumatic controls.

    Drive air pressures required (± 10%) for different mass sets are listed in Table 3:

Table 9. Drive Air Pressure Requirement by Mass Set

MASS SET	DRIVE AIR [kPa (psi)]
MS-AMH-40	275 (40)
MS-AMH-60	380 (55)
MS-AMH-80	450 (65)
MS-AMH-100	550 (80)

⚠ Caution

Do not operate AMH with drive pressure lower than 275 kPa (40 psi). Damage to the AMH could result.

  - o Vacuum supply: The vacuum supply is necessary for AMH operation when there is vacuum in the vacuum chamber (absolute by vacuum mode PG9000 operation). The vacuum supply assures that the binary mass selection pins remain in the correct position and evacuates internal AMH volumes to minimize the likelihood of leaks into the reference vacuum.

    The vacuum pump or vacuum supply for the pressure controller of the PG9000 system can be used for the AMH vacuum supply

    Vacuum drive requirements:

    Flow rate: Very low, avoid restrictions or excessive length of connecting tubing

    Vacuum pressure: At least 50 kPa (7.5 psi) under atmosphere

⚠ Caution

Do not operate AMH when using a PG9000 in "absolute by vacuum" mode without having a vacuum supply connected to AMH Vent. Always check that AMH is supplied with vacuum BEFORE establishing reference vacuum in the AMH bell jar. Failure to do so may result in damage to the binary mass pins and/or binary masses.

⚠ Caution

Do not plug the AMH vent connection. Use only a "SESO" type quick-connector stem. Plugging the AMH vent connection will cause serious damage to AMH internal components.

원문: Fluke Calibration PG9602/9607 메뉴얼(영문) · 제조사 원문 자료입니다. 사양은 제조사 사정에 따라 변경될 수 있습니다.

TS-TL-FLK-082

we measure, we calibrate, we validate.
㈜테솔 · www.tessol.com TS-TL-FLK-082 26 / 192
KOLAS 국제공인교정기관 · ISO/IEC 17025

2.3 Setup

2.3.1 Preparing for Operation

Note

Before setting up the PG9000 system, see Section 2.2 for information on site requirements.

To prepare PG9000 for check out and operation:

❶ Set up the PG9000 Platform (see Section 2.3.1.1).

❷ Make the system pressure interconnections (see Section 2.3.1.2).

❸ If a manual mass set is being used, set up the manual mass set (see Section 2.3.1.3).

❹ If an optional AMH is being used, set it up with its mass set (see Sections 2.3.1.4 and 2.3.1.4.3).

❺ If the PG9000 is to be used with vacuum reference, set up the optional vacuum reference hardware (see Section 2.3.1.6).

2.3.1.1 Setting Up the Platform

The PG9000 Platform consists of the PG9000 base, the PG9000 Remote Electronics Module and the PG terminal. To set up the PG9000 Platform proceed as follows:

❶ Place the PG9000 Base on the site table in the desired orientation. Though the rear panel is usually in the back, any orientation can be used.

❷ Place the PG9000 Terminal and PG9000 Remote Electronics Module in the desired locations.

❸ Connect the PG9000 Terminal to the PG9000 Remote Electronics Module using the 25-pin cable supplied.

❹ Connect the PG9000 Temperature - Humidity Probe to the PG9000 Remote Electronics Module either directly to the back panel or via the supplied TH Probe extension cable.

❺ Connect the PG DRIVER connectors on the PG9000 Remote Electronics Module and PG9000 Base using the 15-pin cable supplied with the PG Platform

❻ Connect electrical power (100 to 240 VAC, 50/60 Hz) to the PG9000 Terminal using the power cable supplied. Any grounded power cable with a standard IEC320-313 connection may be used.

❼ If an automated pressure generation/control component is being used, establish communications between the automated pressure generation/control component and the PG9000 Platform by connecting the generation/control component RS232 port to the PG9000 Platform COM3 port and setting up PG9000 to use an automated pressure generation/control component (see Section 3.11.9)

2.3.1.2 System Pressure Interconnections

Interconnect the PG9000 Platform, pressure generation/control components and a test connection.

The pressure connection on the PG9000 TEST port is DH200 (DH200 is equivalent to AE SF250C,HIP LF4, etc.). Adapters to convert the DH200 connection to 1/8 in. NPT female and 1/8 in. swage are provided with PG9000 Platform accessories.

The pressure connection on the PG9000 CCP controlled clearance pressure port is DH200. The pressure connection labeled CCP is for the application of a *controlled clearance pressure* to the inside of the piston (see Section 3.8). In

© 1998-2010 Fluke Calibration

원문: Fluke Calibration PG9602/9607 메뉴얼(영문) · 제조사 원문 자료입니다. 사양은 제조사 사정에 따라 변경될 수 있습니다.

TS-TL-FLK-082

we measure, we calibrate, we validate.
㈜테솔 · www.tessol.com TS-TL-FLK-082 27 / 192
KOLAS 국제공인교정기관 · ISO/IEC 17025

normal operation, the measured pressure is applied to the CCP pressure connection. Use a tee to connect the TEST port and the CCP port together.

The pressure connections for an optional AMH Automatic Mass Handler are described in Section 2.3.1.4.

2.3.1.3 Setting Up A Manual Mass Set

Note

If installing an MS-AMH-xxx mass set for use with an AMH automated mass handling system, see Section 2.3.1.4.

To install a PG9000 manual mass set, place the mass loading tray (provided with the mass set accessories) at the desired location then install the individual masses on the mass loading tray. See Section 2.3.1.4 for instructions on installation of an AMH mass set for automated mass handling.

⚠ Caution

It is VERY IMPORTANT that the individual masses be installed on the mass loading tray in proper sequence. This will ensure that PG9000 mass loading instructions are executed properly (carefully follow the instructions provided in Section 2.3.1.3, Installing Masses on the Mass Loading Tray).

Installing Masses on the Mass Loading Tray (Manual Mass Set)

PG9000 masses are shipped in reusable, molded shipping and storage cases. One of the cases contains the masses of 5 kg and under, the other case(s) contain(s) the 9 kg *make up* mass, if present, and main masses of 5 or 10 kg each. Each mass is packed in a sealed plastic bag and then placed in a protective shipping insert.

⚠ Caution

The stability over time of PG9000 pressure measurements is a function of the stability of the masses loaded on the piston. Precautions should be taken in handling the masses to minimize influences that may change their mass. This includes always wearing protective gloves when handling the masses to avoid contaminating them with body oils and perspiration. Protective gloves are provided in the accessory kits of PG9000 Platforms.

Masses are loaded onto the mass loading tray in the opposite order that they are loaded onto the PG9000. To install the masses on the mass loading tray, proceed as follows:

❶ Open the shipping cases.

❷ **Install the *main* masses:** The *main* masses (a series of 10 kg masses) are installed horizontally aligned on the mass loading spindle.

❸ The *main* masses are sequentially numbered starting with the number **1**. The *main* mass with the **highest** sequential number is installed first at the bottom of the stack (i.e., the first mass loaded on the tray). The rest of the *main* masses should be stacked **upwards in descending** order ending with *main* mass sequential number **1**. Be careful NOT to confuse the *makeup* mass (refer to next item) with *main* mass **1**.

❹ **Install the mass:** The *make up* mass is a single mass sequentially numbered **1**. It has the same diameter as the *main* masses. It is a 4 or 9 kg mass. The *make up* mass is placed on top of the *main* mass stack. It is always the top of the stack.

❺ **Install the *fractionary* masses:** The *fractionary* masses are all the masses of lower value than the *main* masses and *makeup* mass. These are masses

원문: Fluke Calibration PG9602/9607 메뉴얼(영문) · 제조사 원문 자료입니다. 사양은 제조사 사정에 따라 변경될 수 있습니다.

TS-TL-FLK-082

we measure, we calibrate, we validate.
㈜테솔 · www.tessol.com TS-TL-FLK-082 28 / 192
KOLAS 국제공인교정기관 · ISO/IEC 17025

of 5 kg and under. *Fractionary* masses of 1 to 5 kg are discs with a central hole. *Fractionary* masses of 100 to 500 g are solid, small diameter pucks. *Fractionary* masses of 50 g and under are packed and stored in their own separate storage case.

Fractionary mass discs and pucks are installed vertically in the corresponding slots in the mass loading tray. Use a consistent setup for the sequence number when there are two masses (e.g., always load sequential number **1** in the front).

2.3.1.4 Setting Up An AMH Automated Mass Handler (Optional)

The setup of the AMH can be broken down into 3 steps:

- Connecting the drive air supply (see Section 2.3.1.4.1)
- Connecting the drive vacuum supply (see Section 2.3.1.4.2)
- Connecting AMH communications (see Section 2.3.1.4.3)

2.3.1.4.1 Connecting AMH Drive

The AMH accessories kit includes hardware to facilitate the connection of the drive air supply (see Table 8). Locate the drive air connection accessories including:

- Quick-connector stem (DESO type with red band).
- 2 m 1/8 in. O.D. clear PFA tubing.
- 1/8 in. Swage x 1/4 in. NPT M adaptor.

To use the supplied accessories to make the AMH drive air supply connection proceed as follows:

❶ Connect the quick-connector to one end of the PFA tube. Loosen the 1/8 in. Swage nut on the assembly slightly. Slip the PFA tube into the nut until it stops. Tighten the nut to swage the tube.

❷ Connect the other end of the PFA tube to an appropriate drive air supply (see Section 2.2.2.1). If desired, use the 1/8 in. Swage x 1/4 in. NPT M adaptor.

❸ Insert the quick-connector stem into the AMH DRIVE connection quick-connector (color coded with red band). Press firmly until the stem clicks into place.

❹ Apply drive air pressure to the connection and check for leaks.

Note

The quick-connector stem seals when disconnected so the drive air supply may be applied before the quick-connector stem is inserted into the quick-connector.

⚠ Caution

Do not operate AMH with drive pressure lower than 275 kPa (40 psi). Damage to the AMH could result.

2.3.1.4.2 Connecting AMH Vent

If operating the PG9000 in vacuum reference mode with AMH-100-VAC it is necessary to connect the AMH VENT to vacuum supply. The AMH accessories kit includes hardware to facilitate the connection of the drive vacuum supply (see Table 8) Locate the drive vacuum connection accessories including:

- Quick-connector stem (with blue band) and three way sleeve valve assembly.
- 2 m 1/4 in. O.D. PFA tubing.
- 2 m 3/8 in. O.D. PFA tubing.
- 3/8 in. Swage x 1/4 in. 1/4 in. Swage reducer.

© 1998-2010 Fluke Calibration

원문: Fluke Calibration PG9602/9607 메뉴얼(영문) · 제조사 원문 자료입니다. 사양은 제조사 사정에 따라 변경될 수 있습니다.

TS-TL-FLK-082

we measure, we calibrate, we validate.
㈜테솔 · www.tessol.com TS-TL-FLK-082 29 / 192
KOLAS 국제공인교정기관 · ISO/IEC 17025

- 3/8 in. Swage tee.
- 3/8 in. Swage Port connector.

To use the supplied accessories to make the AMH drive vacuum supply connection proceed as follows:

❶ Connect the blue banded quick-connector/sleeve valve assembly to one end of the PFA tube. Loosen the 1/4 in. Swage nut on the assembly slightly. Slip the PFA tube into the nut until it stops. Tighten the nut to swage the tube.

❷ Connect the other end of the 1/4 in PFA tube to an appropriate vacuum supply (see Section 2.2 **Automated Mass Handler**, Vacuum Supply). If desired, use the 3/8 in. x 1/4 in. reducer, 3/8 in. Swage Tee and Port Connector. The Tee and Port Connector are particularly useful if the vacuum supply is from a DH Intruments PPC/MPC Vacuum Kit. Install the Tee on the 3/8 in. PFA tube between the vacuum pump and the PPC or MPC.

❸ Insert the quick-connector stem into the drive vacuum connection quick-connector (color coded with blue band). Press firmly until the stem clicks into place. Use only a "SESO" type stem (not self sealing).

❹ Check that the three-way sleeve valve is in the GAUGE position (drive vacuum not applied to the AMH). Apply drive vacuum and check for leaks.

⚠ Caution

Do not plug the AMH VENT connection. Use only a "SESO" type quick-connector stem. Plugging the AMH VENT connection can cause serious damage to AMH internal components.

⚠ Caution

A drive vacuum supply must be connected to AMH VENT when using a PG9000 in "absolute by vacuum" mode. Always check that AMH is supplied with drive vacuum before establishing reference vacuum in the AMH vacuum chamber. Failure to do so may result in damage to the binary mass pins and/or binary masses.

2.3.1.4.3 Connecting AMH Communications

Connect the AMH communication cable (6 ft. cable with circular connectors at each end) from the PG9000 Remote Electronics Module to the PG9000 Base. The cable carries both power and signal to the AMH-100-VAC once it is loaded onto the PG9000 Base. See Section 3.7.2.1 for instructions to load the AMH onto the PG Base.

⚠ Caution

Perform an AMH startup before loading AMH masses (see Section 2.4.10). Startup ensures that AMH binary mass pins are retracted and main mass columns are rotated correctly for loading. Installing the AMH over the masses before performing an AMH startup risks damaging internal AMH components.

2.3.1.5 Setting Up an AMH Mass Set

⚠ Caution

Perform an AMH startup before loading AMH masses (see Section 2.4.10). Placing the AMH masses and the AMH on the PG9000 before performing an AMH startup risks damaging internal AMH components.

PG9000 AMH masses are shipped in reusable, molded shipping and storage cases. One of the cases contains the binary masses, binary mass carrier, mass bell and lifting shaft/trim mass tray. The other cases contain the main masses of 10 kg,

원문: Fluke Calibration PG9602/9607 메뉴얼(영문) · 제조사 원문 자료입니다. 사양은 제조사 사정에 따라 변경될 수 있습니다.

TS-TL-FLK-082

we measure, we calibrate, we validate.
㈜테솔 · www.tessol.com TS-TL-FLK-082 30 / 192
KOLAS 국제공인교정기관 · ISO/IEC 17025

Inspecting Contents, Mass Set for mass set composition detail). Each mass is packed in a sealed plastic bag and then placed in a protective shipping insert.

⚠ Caution

The stability over time of PG9000 pressure measurements is a function of the stability of the masses loaded on the piston. Precautions should be taken in handling the masses to minimize influences that may change their mass. This includes always wearing protective gloves when handling the masses to avoid contaminating them with body oils and perspiration. Protective gloves are provided in the accessory kits of PG9000 Platforms.

SHOWN IS THE MS-AMH-100 MASS SET FOR THE AMH-100-VAC MASS HANDLER. SMALLER MASS SETS MAY BE USED WITH AMH-100-VAC AND INCLUDE FEWER MAIN MASS DISCS.

Figure 5. AMH Mass Set

To install the AMH mass set, follow the order of operation below carefully (refer to Figure 5):

❶ **Prepare the masses:** Open the shipping cases and remove all the masses and mass set elements from their plastic bags.

❷ **Install a piston-cylinder module in the PG9000 Platform:** See Section 2.1.1.3.

❸ **Install the binary mass carrier:** Place the pyramidal shaped carrier on top of the piston cap.

❹ **Install the mass loading bell:** Slip the mass loading bell over the binary mass carrier and slide it down until the inside top of the bell sits on the binary mass carrier.

❺ **Install the main mass discs:** Load the 10 kg main mass discs onto the mass bell **starting with mass #1 and loading in sequential order**. Mass #1 should be at the bottom of the stack and the highest number mass at the top. The mass sequence numbers are laser marked on the top surface of each mass. Pass the mass disc over and down the mass loading bell and center it on the ledge at the bottom of the bell. Load the rest of the main masses, sequentially, onto the bottom mass.

❻ **Install the binary mass tubes:** Load the binary mass tubes concentrically from the largest to smallest, outside to inside. The largest, long tubes slip down between the main mass stack and the bell and rest on the ledge at the

© 1998-2010 Fluke Calibration

원문: Fluke Calibration PG9602/9607 메뉴얼(영문) · 제조사 원문 자료입니다. 사양은 제조사 사정에 따라 변경될 수 있습니다.

we measure, we calibrate, we validate.
㈜테솔 · www.tessol.com TS-TL-FLK-082 31 / 192
KOLAS 국제공인교정기관 · ISO/IEC 17025

TS-TL-FLK-082

bottom of the mass bell. The smaller masses load onto the pyramidal steps of the binary mass carrier.

❼ **The mass loading process is complete:** The mass set is in the all loaded position. The mass lifting shaft/trim mass tray assembly is not yet installed. It will be attached after the AMH automated mass handler is installed over the masses on the platform (see Section 3.7.2.1).

❽ **Create the mass set and mass loading bell in the PG Terminal:** See Sections 3.13.1.6 and 3.13.1.11.

2.3.1.6 Setting Up Vacuum Reference Hardware (Optional)

PG9000 may be operated in atmosphere reference or vacuum reference modes. For vacuum reference, the optional bell jar and vacuum reference accessories may be used (see Section 2.1.2.4).

To install the Vacuum reference accessories proceed as follows:

❶ **Setup the base**: Install and setup the base, piston-cylinder and mass set per Sections 2.3.1.1 through 2.3.1.4.3. Ensure proper operation with atmospheric reference.

❷ **Connect AMH Drive Vacuum**: If not already performed, connect the AMH drive vacuum connection (see Section 2.3.1.4.2).

❸ **Install the PG9000 bell jar:** Ensure that the elastomeric seal is in place on the lower lip of the bell jar. Place the bell jar over the masses and the AMH if present. The bell jar locates on the lip of the vacuum plate. Orient the ball jar such that the three KF40 connections are located conveniently for reference vacuum source, manual vent and reference vacuum measurement devices.

❹ **Install the vacuum vent kit:** The vacuum vent kit includes a manually operated valve, a reducer, clamps and centering rings. Note that a KF40 centering ring with an integral mesh screen is provided to help prevent contaminants from entering the bell jar through the vent valve.

❺ **Connect the reference vacuum source:** Attach the vacuum source to one of the KF40 ports on the bell jar. Take measures to assure that vacuum oil cannot return to the PG9000. Consider the need to shut-off the vacuum supply when vacuum is not desired in the vacuum chamber and the need to remove the Bell Jar from the PG9000 Platform to access the piston-cylinder module, the mass set or the AMH if present.

❻ **Install the reference vacuum sensor:** Connect the vacuum gauge and attached isolation valve to one of the KF40 ports on the bell jar using the attached reducer, elbow and centering rings.

⚠ Caution

If using the standard PG9000 reference vacuum sensor or any other capacitance diaphragm gauge, it is important to install in a vertical orientation. Due to gravitational influences installation in any other orientation may result in out of tolerance measurements.

❼ **Establish communications to the vacuum sensor:** Connect the vacuum sensor or the vacuum sensor display to the PG9000 base Com2 port with an RS232 communications cable. See Section 3.13.5.5 for information on using an external vacuum gauge.

❽ **Level the platform if required:** Use the PG9000 Base's two leveling feet and the level mounted on the front of the base.

원문: Fluke Calibration PG9602/9607 메뉴얼(영문) · 제조사 원문 자료입니다. 사양은 제조사 사정에 따라 변경될 수 있습니다.

TS-TL-FLK-082

we measure, we calibrate, we validate. ㈜테솔 · www.tessol.com TS-TL-FLK-082 32 / 192

KOLAS 국제공인교정기관 · ISO/IEC 17025

2.3.2 Installing and Removing a PG9607 Piston-Cylinder Assembly

⚠ Caution

Given the large diameter and small annular gap of the PG9607 piston-cylinder, it is very difficult to insert the piston into the cylinder without the aid of the alignment mechanism provided by the PG9607 platform mounting post and piston retaining assembly. There is a risk of cocking the piston in the cylinder. It is not recommended that the piston ever be put into the cylinder when the piston is not installed on the PG9607 mounting post.

Note

- **For instructions on cleaning the PG9607 piston-cylinder see Section 5.3.3.**
- **For instructions on disassembling the PG9607 piston retaining assembly see Section 5.3.1.**

To operate the PG9607 platform, a piston-cylinder must be installed on its mounting post. To install a piston-cylinder assembly on the PG9607 platform, follow the sequential procedure below. This procedure may be used on the first and subsequent piston-cylinder installations; it may also be used in reverse order to remove a piston-cylinder. Numerical references in the procedure refer to Figure 6.

❶ **Remove the piston retaining assembly (5).** The PG9607 platform is delivered with the piston retaining assembly (5) installed in the mounting post (7). Holding the piston retaining assembly by the knurled surface (14), unscrew it (rotate CCW) fully from the mounting post and remove it. Avoid touching the WHITE cylinder centering ring (15) as it will eventually contact the critical inside surface of the cylinder.

❷ **Check that the lower piston sealing O-ring (10a) is installed.** The PG9607 platform is delivered with the lower and upper piston sealing O-rings (10a, 10b) and O-ring carriers installed loosely in the recess on the mounting post. Remove the upper O-ring and O-ring carrier (10b) and retain. Check that the lower O-ring and O-ring carrier (10a) are present and properly seated. (If needed two spare o-rings are included in the PG9607 platform accessory kit).

❸ **Remove the piston (6) from its packing.** Using lint free gloves or wipes to avoid direct contact with the piston critical surface (polished appearance) remove the piston (6) from its packing.

⚠ Caution

Never handle the piston or cylinder with bare hands. Oil and acids from bare skin can damage the critical surfaces (polished appearance). The cylinder is part of the mass load and contamination can change its mass.

❹ **Install the piston (6) on the mounting post (7).** With the end of the piston etched with “X” and/or the serial number UP (11) so that it will enter the cylinder first, slip the piston over the mounting post and slide it down until it seats on O-ring (10a.) Check that the end of the piston facing UP has “X” and/or the serial number marked on it.

❺ **Install the piston retaining assembly (5).** Place the upper O-ring and carrier (10a) centered on the top surface of the piston. Hold the piston retaining assembly (5) by the knurled ring (14); avoid touching the white cylinder centering ring (15) as it will eventually contact the critical inside surface of the cylinder. Thread the piston retaining assembly into the top of the mounting post (7) and screw it down carefully assuring that upper O-ring carrier (10a) is not pinched. The assembly’s shoulder (13) should meet the top of the piston (11) with no gap between the two surfaces. There will be some resistance from the mounting post O-

© 1998-2010 Fluke Calibration

원문: Fluke Calibration PG9602/9607 메뉴얼(영문) · 제조사 원문 자료입니다. 사양은 제조사 사정에 따라 변경될 수 있습니다.

TS-TL-FLK-082

we measure, we calibrate, we validate.
㈜테솔 · www.tessol.com TS-TL-FLK-082 33 / 192
KOLAS 국제공인교정기관 · ISO/IEC 17025

ring (12), only hand tightening is needed. Do not use tools to install the piston retaining assembly. Tighten lightly by hand until the assembly reaches the end of the engagement threads and surfaces (13) and (11) meet.

❻ **Clean the piston (6) and the cylinder centering ring (15), consider cleaning the cylinder (4).** Using the quick method described in Section 5.3.3, clean the piston (6) and the cylinder centering ring (15). If this is the first piston-cylinder installation, also clean the cylinder (4). On subsequent installations consider cleaning the cylinder before installing it.

❼ **Verify that the cylinder cap O-ring (3) is properly installed.** Remove the cylinder (4) from its packing. It is delivered with the cylinder cap O-ring (3) installed. Check that the O-ring is present and properly seated. If not, install one (an extra one is included in the piston-cylinder accessories). Use tweezers or another long narrow tool. DO NOT touch the inside of the cylinder.

❽ **Verify that the cylinder adjustment mass (17) is properly installed.** Check that the cylinder adjusting mass (17) is present and completely threaded onto the cylinder retaining screw (2). This mass is used to adjust the total cylinder mass to the value reported in the calibration report.

❾ **Install the cylinder (4) on the piston (6).** Gently slip the cylinder (4) over the piston (6). The cylinder centering ring (15) aligns the cylinder on the piston facilitating the insertion process. Allow the cylinder to slip all the way down the piston until it reaches end of stroke.

❿ **Tighten the cylinder retaining screw (2).** Using a 5 mm Allen tool (one is supplied in the PG9607 accessories), tighten the cylinder retaining screw (2) into the cylinder stroke limiter (16) of the piston retaining assembly (5). Turn the screw CW to tighten. Since the cylinder stroke limiter (16) is free to move within the piston retaining assembly (5), the retaining screw (2) may rotate with the assembly, failing to tighten. If this is the case, press down a bit or lift up on the screw to help it engage and tighten. Tighten gently until you can feel the cylinder cap O-ring (3) takes its seat in the cylinder stroke limiter.

⚠ Caution

Be sure the cylinder retaining screw (2) is tightened before applying pressure to the piston-cylinder. The cylinder stroke limiter (16) limits the cylinder's upward movement preventing it from coming off the piston.

원문: Fluke Calibration PG9602/9607 메뉴얼(영문) · 제조사 원문 자료입니다. 사양은 제조사 사정에 따라 변경될 수 있습니다.

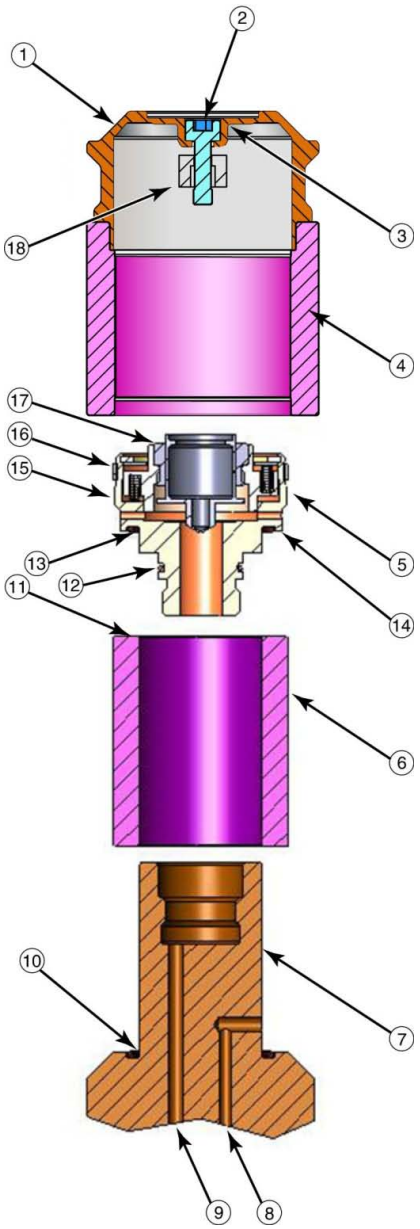

① Cylinder Cap
② Cylinder Retaining Screw
③ Cylinder Cap O-ring (Brown, Viton, 2-015)
④ Cylinder
⑤ Piston Retainer Assembly/Nut
⑥ Piston
⑦ Mounting Post (part of PG9607 platform)
⑧ Controlled Clearance Pressure (CCP) Inlet
⑨ Test Pressure Inlet
⑩ Piston Sealing O-ring – lower (Brown Viton, 2-029)
⑪ Piston Top Surface
⑫ Mounting Post O-ring (Brown, Viton, 2-019)
⑬ Piston Sealing O-ring – upper (Brown Viton, 2-029)
⑭ Piston Retainer Assembly Shoulder
⑮ Knurled Gripping Holding Surface
⑯ Cylinder Centering Ring
⑰ Cylinder Stroke Limiter
⑱ Adjustment Mass

Figure 6. PG9607 Piston-Cylinder Installation

⚠ Caution

The PG9607 is intended to use the PC-9607-5 piston cylinder assembly. It is also possible to use the PC-7607-5 piston cylinder assembly (formerly sold with model PG7607 piston gauge) with no modifications in the mounting method or components.

© 1998-2010 Fluke Calibration

원문: Fluke Calibration PG9602/9607 메뉴얼(영문) · 제조사 원문 자료입니다. 사양은 제조사 사정에 따라 변경될 수 있습니다.

2.4 Power Up And Verification

2.4.1 Power Up

⚠ Caution

Ensure that all PG9000 electrical connections are made before powering on the PG9000 (see Section 2.3.1.1). Disconnecting and/or reconnecting any PG9000 cable while power is ON may result in damage to PG9000 internal components.

Turn the PG9000 power ON by pressing the power ON/OFF switch on the rear panel of the PG Terminal. Observe the PG terminal display as the terminal connects with the PG9000 Remote Electronics Module, tests, initializes and goes to the main run screen (see Section 3.9).

If **<….Searching…..>** displays for more than 5 seconds, the communications between the PG9000 Remote Electronics Module and the PG Terminal are failing. Check that the PG9000 to PG Terminal cable is properly installed.

If PG900 fails to reach the main run screen, service may be required. Record the sequence of operations and displays observed and contact a **Fluke Calibration** Authorized Service Provider (see Table 28).

2.4.2 Check That On-board Piston-Cylinder Module And Mass Set Information Are Correct

PG9000 uses stored piston-cylinder and mass set metrological information to calculate the reference pressures it defines (see Section 3.1). For the pressure values to be correct, the stored metrological information on the piston-cylinder, mass set and mass loading bell must be correct. Before using PG9607 for accurate pressure definition, the validity of the stored information should be verified. This consists of comparing the piston-cylinder, mass set and mass loading bell information stored in PG9000 to the information in the current piston-cylinder and mass set calibration reports.

To verify the PG9000 piston-cylinder, mass set and mass loading bell information, use the piston-cylinder and mass set viewing capabilities accessed by pressing **[SPECIAL]**, **<1PC/MS>** (see Section 3.13.1). Compare all the information contained in the PG9000 piston-cylinder, mass set and mass loading bell files to the information on the current piston-cylinder, mass set and mass loading bell calibration reports.

2.4.3 Set Local Gravity Value

PG9607 uses the value of local acceleration due to gravity (g_l) in its calculation of the reference pressure it defines (see Section 3.1). The correct value of local acceleration due to gravity at the site of PG9000 use must be entered. This is accomplished by pressing **[SPECIAL]**, **<6gl>** (see Section 3.13.6) and editing the value of local gravity.

2.4.4 Setup Pressure Equation Variable Input Sources

PG9000 uses many variables in calculating defined pressures. The sources of the variables are determined by the current SETUP file. SETUP files are viewed, created, edited and selected using the SETUP function accessed by pressing **[SETUP]** (see Section 3.12). A factory SETUP file is available and already selected on a new PG9000, but the operator may desire to customize it. The factory setup file assumes that PG9000's internal measurement values will be used whenever possible.

원문: Fluke Calibration PG9602/9607 메뉴얼(영문) · 제조사 원문 자료입니다. 사양은 제조사 사정에 따라 변경될 수 있습니다.

TS-TL-FLK-082

we measure, we calibrate, we validate.
㈜테솔 · www.tessol.com TS-TL-FLK-082 36 / 192
KOLAS 국제공인교정기관 · ISO/IEC 17025

2.4.5 Check Proper Operation Of Ambient Condition Measurements

PG9000 automatically measures ambient conditions and uses these conditions in its pressure calculations.

To verify that the ambient condition measurements are operating properly proceed as follows:

- **Display current ambient condition readings:** Press **[AMBIENT]**. The ambient conditions run screen is displayed (see Section 3.11.6).
- **Verify proper ambient condition readings:** Compare the ambient condition values displayed to the actual values of ambient conditions. Refer to the ambient condition measurement specifications when evaluating the ambient readings (see Section 1.2.1.3).

Note

- **The unit of measure in which ambient pressure is displayed is the same as the unit selected by pressing [UNIT] (see Section 3.11.3). Units of measure in which other ambient condition values are expressed cannot be changed.**
- **PG9000 allows the source of ambient condition values used in reference pressure calculations to be specified. The source may be PG9000's on-board measurements, a normal value or operator entered values. See Section 3.12 for information on specifying the source of ambient condition values used by PG9000 in reference pressure calculations.**

2.4.6 Apply Pressure To The Piston-Cylinder Module

Note

- **This section assumes that the PG9000 system has already been set up, including pressure interconnection (see Section 2.3).**
- **PG9607 is a unique configuration of PG9000 that utilizes a floating cylinder with a stationary piston. This is in contrast with other PG9000 models that use a floating piston and a stationary cylinder. For consistency 'Piston' refers to the floating component on which mass is loaded in this and other noted sections.**

⚠ Caution

Before applying pressure to the PG9000 system, be sure that all pressure vessels and connections are rated for the pressure levels that will be applied and that all connections have been properly tightened.

Continuing with the PG9000 set up and check out requires applying pressure to the piston-cylinder module and floating the piston.

Proceed as follows:

❶ **Turn OFF automated piston rotation and automated pressure generation (if present).** This will prevent the automated rotation and pressure generation features (if present) from interfering during verification of these features (see Sections 3.11.8 and 3.11.9 for information on automated piston rotation and pressure generation).

❷ **Load mass on the piston.** Install the mass loading bell on the piston. Then load the *make up* mass (4 or 9 kg) (see Section 2.3.1.3). If the PG9000 platform is equipped with AMH automated mass handling, press **[ENTER]** and enter a low value of pressure or mass to cause mass to be loaded onto the piston.

❸ **Float the piston.** Use the pressure generation/control component of the PG9000 system to apply pressure under the piston through the PG9000 Platform TEST port. The piston will float at a pressure approximately equal to the piston mass to pressure conversion

© 1998-2010 Fluke Calibration

원문: Fluke Calibration PG9602/9607 메뉴얼(영문) · 제조사 원문 자료입니다. 사양은 제조사 사정에 따라 변경될 수 있습니다.

we measure, we calibrate, we validate.
㈜테솔 · www.tessol.com TS-TL-FLK-082 37 / 192
KOLAS 국제공인교정기관 · ISO/IEC 17025

TS-TL-FLK-082

factor multiplied by the mass load in kg. The piston-cylinder conversion factor is marked on the top of the piston cap and is in either kPa or MPa per kilogram [kPa/kg or MPa/kg].

Note

If the piston cannot be floated because it immediately sinks down from a float position, there is a leak in the pressure system. Identify and eliminate leaks until the piston, once floated, falls at a rate less than the nominal fall rate given in the specifications of the piston-cylinder module being used (see Section 1.2.2).

2.4.7 Check Proper Behavior Of Motorized Piston Rotation

Note

PG9607 is a unique configuration of PG9000 that utilizes a floating cylinder with a stationary piston. This is in contrast with other PG9000 models that use a floating piston and a stationary cylinder. For consistency 'Piston' refers to the floating component on which mass is loaded in this and other noted sections.

The motorized rotation feature can be set to engage and disengage automatically as needed to maintain the floating piston rotating within a set rotation rate range when floating, and to stop rotation before mass manipulation to set a different pressure occurs (see Section 3.11.8). Motorized piston rotation can also be activated manually by pressing **[↻]**. Stopping piston rotation can be activated by pressing and holding **[↻]** and then pressing **[←]** (see Section 3.11.13).

Turn automated rotation OFF by pressing **[ROTATE]** and selecting **<1off>**. Load at least the mass bell on the piston, float the piston and press **[↻]**. When the piston is floating, the motorized rotation system should engage and cause the mass bell and piston to begin rotating. Within 5 to 30 seconds, depending on the mass load, the rotation rate should reach about 50 rpm. Current rotation rate can be observed by pressing **[SYSTEM]** (see Section 3.11.5).

2.4.8 Check Proper Operation Of Piston Behavior Measurements

Note

PG9607 is a unique configuration of PG9000 that utilizes a floating cylinder with a stationary piston. This is in contrast with other PG9000 models that use a floating piston and a stationary cylinder. For consistency 'Piston' refers to the floating component on which mass is loaded in this and other noted sections.

Float the piston and rotate it (see Sections 2.4.6 and 2.4.7).

Press **[SYSTEM]** once to reach the first SYSTEM run screen. Verify that the piston position, piston fall/rise rate, piston rotation rate and piston rotation decay rate are indicating correctly (see Section 3.11.5). The piston position reading system may be calibrated using an on-board procedure if necessary (see Section 5.2.2). Calibration of piston position is recommended when installing a new PG9000 and regularly after installation.

Press **[SYSTEM]** again to reach the second SYSTEM run screen. Verify that the piston-cylinder temperature and temperature rate of change are indicating correctly (see Section 3.11.5).

2.4.9 Verify Vacuum Reference

PG9000 includes provisions for establishing and measuring a vacuum reference.

To verify the vacuum reference capability:

❶ Install a piston-cylinder module (see Section 2.3.2).

❷ Install the bell jar on the PG9000 Base (the bell jar aligns on the PG9000 vacuum plate and seals itself).

원문: Fluke Calibration PG9602/9607 메뉴얼(영문) · 제조사 원문 자료입니다. 사양은 제조사 사정에 따라 변경될 수 있습니다.

❸ Add a reference vacuum sensor to one of the KF40 ports on the bell jar (see Section 2.3.1.6).

❹ Apply a vacuum through another KF40 port on the bell jar, sealing other bell jar openings with caps.

❺ Press **[SYSTEM]** twice to observe the value of vacuum read by the PG9000 vacuum gauge.

If a vacuum pump of adequate capacity has been correctly connected to the reference vacuum port, the vacuum read by the PG9000 vacuum gauge should go to 4 Pascal [Pa] or lower in less than five minutes on the first pump down and two to three minutes on immediately subsequent pump downs.

If this performance is NOT achieved:

- The vacuum pump may be inadequate.
- The connection of the vacuum pump to the PG9000 bell jar may have leaks or excessive restrictions.
- The PG9000 vacuum gauge may be incorrect.
- There may be a leak in the PG9000.

2.4.10 AMH Start Up/Verification

⚠ Caution

Perform an AMH startup before loading AMH masses (see Section 2.4.10). Startup ensures that AMH binary mass pins are retracted and main mass columns are rotated correctly for loading. Installing the AMH over the masses before performing an AMH startup risks damaging internal AMH components.

Perform the initial verification of the AMH mass loading system with **no masses loaded** on the piston-cylinder, with the AMH loaded on the platform and with the AMH connected to the platform pressure and electrical connection. Be sure to match the pressure (red) and the vacuum/vent (blue) connections. Do not install masses and the AMH together on the platform until steps ❶ through ❺ below have been completed.

⚠ Caution

A drive vacuum supply must be connected to AMH VENT when using a PG9000 in "absolute by vacuum" mode. Always check that AMH is supplied with drive vacuum before establishing reference vacuum in the AMH vacuum chamber. Failure to do so may result in damage to the binary mass pins and/or binary masses.

To verify the AMH mass handler prior to installing it on the PG9000 Platform, proceed as follows:

❶ **Make the necessary pressure, power and communications connections:** Complete the set up procedure described in Section 2.3.1.

⚠ Caution

Do not operate AMH with drive pressure lower than 275 kPa (40 psi). Damage to the AMH could result.

❷ Insert the mass lifting shaft into the AMH: Insert the shaft into the hole in the center of the AMH mass lifter and slide it down until the trim mass tray sits on the top of the lifter. This arrangement trips the AMH's internal proximity sensor allowing the AMH system to be operated off of the PG9607 Platform without an actual mass load.

❸ Select an AMH mass set and mass bell as the active mass set and bell for the PG9000: This step can be skipped if the AMH mass set and bell have already been selected, if so go directly to step ❹. On the PG Terminal, press **[SPECIAL], <1PC/MS>, <3mass bell>, <5select>** and select the mass bell of the AMH mass set. Using **[SPECIAL], <1PC/MS>, <2mass set>, <5select>**, select an AMH mass set (mass set designated by S/N nnnnA). Selecting the AMH mass set causes the PG9000 Platform to attempt to establish

© 1998-2010 Fluke Calibration

원문: Fluke Calibration PG9602/9607 메뉴얼(영문) · 제조사 원문 자료입니다. 사양은 제조사 사정에 따라 변경될 수 있습니다.

TS-TL-FLK-082

we measure, we calibrate, we validate. ㈜테솔 · www.tessol.com TS-TL-FLK-082 39 / 192

KOLAS 국제공인교정기관 · ISO/IEC 17025

communication with the AMH system. If the communication fails, an error message occurs (see Sections 3.7.2.8, 6).

If communication succeeds, the PG9000 initializes the AMH mass handler. The trim mass tray should rise approximately 2.5 cm (1 in.) above the top of the lifter; followed by the sound of the main mass selection columns rotating. Then the trim mass tray should be lowered back down. The steps of this procedure are commented on the PG Terminal display as they execute. If the sequence does not complete and/or any error messages are observed, see Section 6 and Table 10 for troubleshooting assistance. If the sequence completes, the AMH system has been cleared and put into a known state in which all mass holding ledges and pins are retracted so that it can safely be slipped down over the AMH mass set and installed on the PG9000 Platform.

The PG9000 Platform must be able to initialize the AMH system before start up can proceed.

❹ **Clear the AMH and test its operation:** Press **[SPECIAL]**, **<8AMH>**, **<2control>**, **<3loadall>**. The trim mass tray should rise approximately 2.5 cm (1 in.) above the top of the lifter, followed by the sound of the main mass selection columns rotating. Then the trim mass tray should be lowered back down. The steps of this procedure are commented on the PG Terminal display as they occur. If the sequence does not complete and/or any error messages are observed, see Section 6 and Table 10 for troubleshooting assistance. If the sequence completes, the AMH mass handler has been cleared and put into a known state in which all mass holding ledges and pins are retracted so that it can safely be slipped down over the mass set and installed on the PG9000 Platform.

❺ **Remove the AMH from the platform:** Once the AMH has been cleared it can be removed and the AMH mass set can be loaded for operation.

If desired, visually inspect the condition of the AMH mass handler by carefully tipping the AMH to look inside. The main mass selection columns should have their all flat surfaces (no ledges) oriented towards the center and all binary mass selection pins should be retracted (see Section 3.7.1).

When this step is complete, the AMH masses and mass handler are ready to be installed on the PG9000 Platform (see Sections 2.3.1.4.3 and 3.7.2.1).

2.4.11 Check Automated Pressure Generation (If Present)

⚠ Caution

Before applying pressure to the PG9000 system, be sure that all pressure vessels and connections are rated for the pressure levels that will be applied and that all connections have been properly tightened.

To check automated pressure generation/control:

❶ Verify that the automated pressure generation/control component is properly connected to the system (see Section 2.3.1.2).

❷ When operation has returned to the main run screen, turn ON automated pressure generation control, if available, by pressing **[GEN]** and selecting **<1on>** (see Section 3.11.9).

❸ Press **[P OR M]**, **<1pressure>** to select *pressure entry mode* (see Section 3.11.12). Press **[ENTER]** and enter a pressure value to be generated and follow the mass loading instruction (see Section 3.6).

❹ Verify the pressure generation/control component properly generates pressure and floats the PG9000 piston.

2.4.12 Check/Set Security Level

PG9000 has a security system based on User Levels. By default, the security system is set to **low** and NO password is required to change the security level. See Section 3.13.4.5 for information on the security system. As part of the PG9000 startup, set your desired security level and a password.

원문: Fluke Calibration PG9602/9607 메뉴얼(영문) · 제조사 원문 자료입니다. 사양은 제조사 사정에 따라 변경될 수 있습니다.

TS-TL-FLK-082

we measure, we calibrate, we validate. ㈜테솔 · www.tessol.com TS-TL-FLK-082 40 / 192

KOLAS 국제공인교정기관 · ISO/IEC 17025

⚠ Caution

PG9000 is delivered with the security level set to low to avoid inadvertent altering of critical internal settings but with access to changing security levels unrestricted. It is recommended that the low security level be maintained at all times and password protection be implemented if control over setting of security levels is desired.

2.4.13 Additional Precautions to Take Before Making Pressure Measurements

Before using PG9000 to make accurate pressure measurements, consider the following:

- Select/activate the correct piston-cylinder module, mass set and mass loading bell (see Sections 3.11.2, 3.13.1.10, 3.13.1.15).
- If using an automated pressure generation/control component with automated pressure generation, set the pressure controller's upper limit (UL) (see Section 3.11.9.3).
- Enter the correct value of local gravity at the site of use (see Section 3.13.6).
- Consider head corrections (see Sections 3.11.7 and 3.13.3).
- Level the PG9000 Platform properly (see Section 2.3.1.1).
- Select the correct pressure unit of measure and measurement mode (see Sections 3.11.3 and 3.11.4).
- Verify that the settings for the sources of variables to be used by PG9607 in its calculations of reference pressures are those desired (see Section 3.12).
- Verify that the piston-cylinder module is correctly cleaned and operating properly (see Section 5.3).
- Verify that there are NO leaks in the pressure system.

2.5 Short Term Storage

The following is recommended for short term storage of PG9000.

❶ Remove all masses from the PG9000 Platform (manual mass set only).

❷ Vent all circuits to atmosphere.

❸ Turn OFF power using the power switch on the rear of the PG9000 Terminal.

© 1998-2010 Fluke Calibration

원문: Fluke Calibration PG9602/9607 메뉴얼(영문) · 제조사 원문 자료입니다. 사양은 제조사 사정에 따라 변경될 수 있습니다.

TS-TL-FLK-082

we measure, we calibrate, we validate.
㈜테솔 · www.tessol.com TS-TL-FLK-082 41 / 192
KOLAS 국제공인교정기관 · ISO/IEC 17025

Notes

원문: Fluke Calibration PG9602/9607 메뉴얼(영문) · 제조사 원문 자료입니다. 사양은 제조사 사정에 따라 변경될 수 있습니다.

3. General Operation

3.1 Fundamental Operating Principles

Note

PG9607 is a unique configuration of PG9000 that utilizes a floating cylinder with a stationary piston. This is in contrast with other PG9000 models that use a floating piston and a stationary cylinder. For consistency 'Piston' refers to the floating component on which mass is loaded in this and other noted sections.

PG9000s operate on the principle of the piston gauge in which pressure is defined by balancing it against a known force on a known area (see Figure 7). The known area is defined by a vertically mounted piston rotating in a cylinder and the known force is applied to the piston by loading it with known mass subjected to acceleration due to gravity. When the force applied by the pressure and the force applied by the mass accelerated by gravity are in equilibrium, the piston floats and the pressure under the piston remains constant. The pressure can be calculated following the equation in Figure 7) (see also, Section 7.2). For pure gas piston-cylinders the pressurized fluid under the piston also lubricates the gap between the piston and the cylinder.

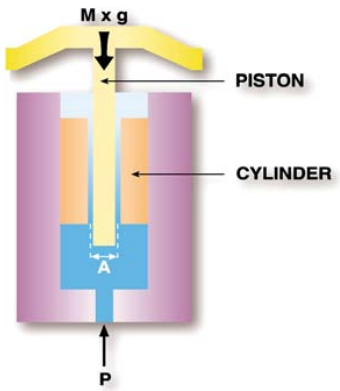

$$P = \frac{\sum_i M_i g_l \left(1 - \frac{\rho_a}{\rho_m}\right) + \pi D \tau}{A_{(T_r, P_r)} \left[1 + (\alpha_p + \alpha_c)(T - T_r)\right](1 + \lambda P)} - \rho_r g_l h$$

Figure 7. Piston Gauge Operating Principle

The PG9000 Platform is designed to mount a variety of piston-cylinder sizes, allow pressure to be applied under the piston and allow masses to be loaded on top of the piston. The PG9607 Platform, in particular, is designed to mount a 50 mm diameter piston with a floating cylinder with masses loaded on top of the cylinder.

The measurement uncertainty in the pressure defined by the piston gauge depends on the uncertainty in the effective area of the piston-cylinder and the force applied by the mass accelerated by gravity. PG9000 stores the calibrated values of the piston-cylinders and masses it uses in on-board files (see Section 3.13.1). To determine the effective area of the piston-cylinder and the force applied by the masses under actual operating conditions, a number of influences on these values must be quantified and taken into consideration. For this reason, PG9000 includes extensive features to monitor the behavior and conditions of the piston-cylinder as well as ambient conditions that affect pressure definition (see Sections 3.11.5 and 3.11.6). PG9000 uses the piston-cylinder, mass and ambient condition information to calculate the pressure defined by a given mass load or the mass load needed to define a given pressure (see Section 7.2). The source of each value used by PG9000 in its calculations can be selected by the user between PG9000's internal measurements, normal values or user entered values. These sources are defined in SETUP files (see Section 3.12).

Once PG9000 has been set up, it is used in day-to-day operation either to define pressures applied to a device or system under test or to measure a stable pressure. To interface with the PG Terminal, the operator:

 © 1998-2010 Fluke Calibration

원문: Fluke Calibration PG9602/9607 메뉴얼(영문) · 제조사 원문 자료입니다. 사양은 제조사 사정에 따라 변경될 수 있습니다.

❶ Selects the appropriate piston-cylinder to cover the pressure range (see Section 3.13.1.5).

❷ Selects the desired pressure unit of measure (see Section 3.11.3).

❸ Selects the desired pressure measurement mode (gauge, absolute, differential) (see Section 3.11.4).

❹ Sets the head difference between the PG9000 and the device under test (see Section 3.11.7).

❺ Selects *mass to pressure* or *pressure to mass* operating mode (see Section 3.11.12).

❻ Enters a pressure to define or a current mass load to calculate (see Section 3.11.11.1 and 3.11.11.2).

❼ Loads masses by hand or with optional AMH automated mass handler, floats piston and defines pressure.

3.2 Keypad Layout And Protocol

PG9000 has a 4 x 4 keypad for local operator access to direct functions, function menus and for data entry.

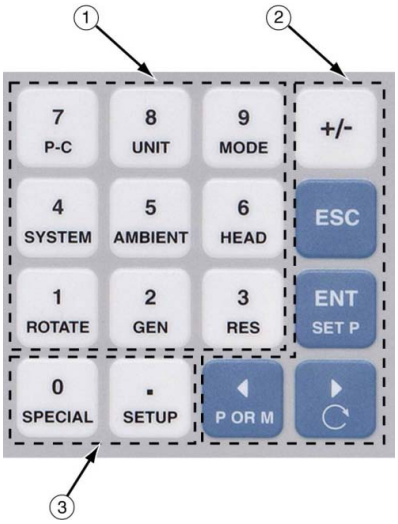

① The **Function/Data keys** allow very commonly used functions to be accessed directly from the main run screen by a single keystroke. The name of the function is on the bottom half of the key (see Section 3.11.1). These keys enter numerical values when editing.

② The **Editing and Execution keys** are for execution, suspending execution, backing up in menus and editing entries.

③ The **Menu/Data keys** provide access to function menus from the main run screen. The menu name is on the bottom half of the key. The SETUP menu is for more frequently used functions. The SPECIAL menu is for functions that are NOT generally used as a part of day to day operation. These keys enter numerical values when editing.

Figure 8. PG9000 Keypad Layout

Key press confirmation is provided by both tactile and audible feedback. A single beep confirms a valid entry. A descending two note tone signals an invalid entry. The audible valid entry feedback can be suppressed or modified by pressing **[SPECIAL]** and selecting **<5prefs>, <2sound>** (see Section 3.13.4.2).

Pressing the **[ENTER/SET P]** key generally causes execution or forward movement in the menu tree. **[ENTER/SET P]** is also used to enter a command to set a pressure.

Pressing the **[ESCAPE]** key generally allows movement back in the menu tree and/or causes execution to cease or suspend without changes being implemented. Pressing **[ESCAPE]** repeatedly eventually returns to the main run screen. From the main run screen, pressing **[ESCAPE]** allows momentary viewing of the PG9607 identification screen.

Pressing the **[+/-]** key changes a numerical sign when editing. It also toggles through multiple screens when available.

Pressing the **[←]** and **[→]** keys when editing allows reverse and forward cursor movement when editing data entry. These keys are also used to scroll through choices.

Menu selections can be made by pressing the number of the selection directly or by pressing **[←]** and **[→]** to place the cursor on the number of the desired selection and pressing **[ENTER]**.

원문: Fluke Calibration PG9602/9607 메뉴얼(영문) · 제조사 원문 자료입니다. 사양은 제조사 사정에 따라 변경될 수 있습니다.

we measure, we calibrate, we validate.
KOLAS 국제공인교정기관 · ISO/IEC 17025
㈜테솔 · www.tessol.com TS-TL-FLK-082 44 / 192
TESSOL Technical Library
TS-TL-FLK-082

Note

Some screens go beyond the two lines provided by the display. This is indicated by a flashing arrow in the second line of the display. Press [←] and [→] to move the cursor to access the lines that are NOT visible or directly enter the number of the hidden menu choice if you know it.

3.3 Sounds

The PG Terminal is equipped with a variable frequency tone device to provide audible feedback and alarms. Some sounds can be modified and all sounds can be suppressed (see Section 3.13.4.2). Sounds are used for the following indications:

Valid key press	Brief high frequency beep.
Invalid key press	Three rapid, low frequency beeps.
Piston left end of stroke high or low	Three rapid valid key press beeps. Piston was at low stop or high stop and just entered spring zone (see Section 3.5).

3.4 Pressure Ready/Not Ready Indication

The three characters on the top line, far left, of the main run screen provide a pressure *Ready/Not Ready* indication. This indication is intended to give the user a clear and objective indication of when PG9000 conditions are such that the value of pressure it is defining is valid and in tolerance. There are three *Ready/Not Ready* indication characters to indicate the status of the three main *Ready/Not Ready* criteria. The *Ready/Not Ready* indication characters are shown on the first line, top left hand side, of the main run screen.

Note

PG9607 is a unique configuration of PG9000 that utilizes a floating cylinder with a stationary piston. This is in contrast with other PG9000 models that use a floating piston and a stationary cylinder. For consistency 'Piston' refers to the floating component on which mass is loaded in this and other noted sections.

1. Piston position and vertical movement.
2. Piston rotation.
3. Reference vacuum (PG9000 in *absolute by vacuum* measurement mode only).

```
1 2 3
* * * 100.4755 kPa g h
+ 0.1 mm 10.00564 kg
```

For each *Ready/Not Ready* indication character, **<*>** indicates a *Ready* condition. Therefore, **<***>** or **<** >** indicates that all conditions necessary for an in tolerance pressure definition are present. Any indication other than **<*>** indicates *Not Ready*.

See Sections 3.4.1, 3.4.2 and 3.4.3 for details on each of the three *Ready/Not Ready* indicating characters.

Note

The criteria used to distinguish between *Ready* and *Not Ready* conditions can be customized by the user (see Sections 3.4.1, 3.4.2, 3.4.3).

© 1998-2010 Fluke Calibration

원문: Fluke Calibration PG9602/9607 메뉴얼(영문) · 제조사 원문 자료입니다. 사양은 제조사 사정에 따라 변경될 수 있습니다.

TS-TL-FLK-082

we measure, we calibrate, we validate.
㈜테솔 · www.tessol.com TS-TL-FLK-082 45 / 192
KOLAS 국제공인교정기관 · ISO/IEC 17025

3.4.1 Piston Position *Ready/Not Ready*

Note

PG9607 is a unique configuration of PG9000 that utilizes a floating cylinder with a stationary piston. This is in contrast with other PG9000 models that use a floating piston and a stationary cylinder. For consistency 'Piston' refers to the floating component on which mass is loaded in this and other noted sections.

The piston position *Ready/Not Ready* character indicates *Ready* or *Not Ready* based on the position of the piston in its vertical stroke (see Section 3.5) and an automated measure generation status (see Section 3.11.9). This ensures that pressure definitions will be made with the piston not more than a certain distance from mid-float position and that measurements will not be made while the action of an automated pressure controller may influence the pressure.

The piston position *Ready/Not Ready* character is the first character from the left on the top line of the main run screen.

The piston position *Ready/Not Ready* criterion is determined by the current SETUP file and can be customized by the user (see Section 3.12).

Piston position *Ready/Not Ready* character indications include:

<*> **Piston position *Ready*** (within the position limits specified in the current SETUP file) (see Section 3.5).

<↓> **Piston position *Not Ready*, low** (below the position limits specified in the current SETUP file, see Section 3.12). The **<↓>** flashes if the piston is not at the bottom stop position to alert the user that this indicator is *Not Ready*.

<↑> **Piston position *Not Ready*, high** (above the position limits specified in the current SETUP file) (see Section 3.12). The **<↑>** flashes if the piston is not at the top stop position to alert the user that this indicator is *Not Ready*.

<?> **Piston position not known** (current specified mass load is less than the load of the piston + bell). The bell must be installed for PG9000 piston position measurement to operate correctly so piston position values shown are not valid when the bell is not installed.

Note

Piston position always indicates *Not Ready* if automated pressure generation is adjusting pressure, regardless of actual piston position.

3.4.2 Piston Rotation *Ready/Not Ready*

Note

PG9607 is a unique configuration of PG9000 that utilizes a floating cylinder with a stationary piston. This is in contrast with other PG9000 models that use a floating piston and a stationary cylinder. For consistency 'Piston' refers to the floating component on which mass is loaded in this and other noted sections.

The piston rotation *Ready/Not Ready* character indicates *Ready* or *Not Ready* based on the rotation rate of the piston.

The piston rotation *Ready/Not Ready* character is the second character from the left on the top line of the main run screen.

The piston rotation rate *Ready/Not Ready* criterion is specific to the currently active piston cylinder module and can be edited by the user (see Sections 3.13.1.1).

Piston rotation rate *Ready/Not Ready* character indications include:

<*> **Rotation rate *Ready:*** Rotation rate is within the rotation rate limits specified in the current piston-cylinder module file) (see Section 3.13.1.1).

<<> **Rotation rate *Not Ready,* low:** Rotation rate is less than the lower rotation rate limit specified in the current piston-cylinder module file (see Section 3.13.1.1)

원문: Fluke Calibration PG9602/9607 메뉴얼(영문) · 제조사 원문 자료입니다. 사양은 제조사 사정에 따라 변경될 수 있습니다.

or motorized rotation system is currently engaged. Note that the low rotation limit is automatically reduced when the mass loaded on the piston is less than 3 kg. The **<<>** flashes if the piston is floating to alert the user that this indicator is *Not Ready*.

<?> **Rotation rate not known:** Current specified mass load is less than the load of the (piston + bell). The bell must be installed for PG9000 piston rotation rate measurement to operate correctly so piston rotation rate cannot be measured when the bell is not installed.

Note

At mass loads less than 3 kg the low rotation limit is automatically reduced to an operational minimum to maximize free rotation time.

3.4.3 Vacuum Reference *Ready/Not Ready*

The vacuum reference *Ready/Not Ready* is only active when operating in *absolute by vacuum* mode (see Section 3.11.4).

The vacuum reference *Ready/Not Ready* character indicates *Ready* or *Not Ready* based on the value of reference vacuum when making measurements in *absolute by vacuum* mode. This ensures that definitions of absolute pressure with a vacuum reference will be made with the vacuum under the PG9000 bell jar lower than a specified value. When the vacuum is not low enough, vacuum measurement errors may be excessive.

The vacuum reference *Ready/Not Ready* character is the third character from the left on the top line of the main run screen.

The vacuum reference *Ready/Not Ready* criterion is determined by the current SETUP file and can be customized by the user (see Section 3.12). The vacuum reference criterion is a fixed value that can be customized by the user when the vacuum reference selection in the SETUP file is *COM2.* If the selection in the SETUP file is *user* or *normal*, the vacuum reference *Ready/Not Ready* character always indicates *Ready* and the value cannot be customized.

Vacuum reference *Ready/Not Ready* character indications include:

< > **(Blank) Vacuum reference *Ready/Not Ready* is not in use.** Vacuum reference is not present and enabled or current measurement mode is not *absolute by vacuum*.

<*> **Vacuum reference *Ready.*** Vacuum value is below limit specified in the current SETUP file if source is *COM2* or *user* (not a measured value) *(*see Section 3.12).

< > > **Vacuum reference *Not Ready.*** Current SETUP file source for vacuum is *COM2* and vacuum value is above the limit specified (see Section 3.12). The **<>>** flashes if the piston is floating to alert the user that this indicator is *Not Ready*.

3.5 Piston Position

Note

PG9607 is a unique configuration of PG9000 that utilizes a floating cylinder with a stationary piston. This is in contrast with other PG9000 models that use a floating piston and a stationary cylinder. For consistency 'Piston' refers to the floating component on which mass is loaded in this and other noted sections.

When operating a PG9000 piston gauge, reference pressure values are defined by loading known mass values on the piston and adjusting the pressure to float the piston. Piston position is measured and displayed real time on the MAIN run screen (see Section 3.9) and in the first SYSTEM run screen (see Section 3.11.5.1). Piston position is used as a criterion for the *Ready/Not Ready* indication as valid measurements can only be made when the piston is in the correct position (see Section 3.4.1).

The full piston stroke is ± 4.5 mm from the midstroke position. The stroke is divided into different positions and zones as illustrated in Figure 9. These zones are:

- **High and low stops:** The piston is at the minimum or maximum end of stroke. The pressure applied to the piston is higher (at high stop) or lower (at low stop) than that corresponding to the mass loaded on the piston. The high and low stop positions are fixed.

© 1998-2010 Fluke Calibration

원문: Fluke Calibration PG9602/9607 메뉴얼(영문) · 제조사 원문 자료입니다. 사양은 제조사 사정에 따라 변경될 수 있습니다.

we measure, we calibrate, we validate. ㈜테솔 · www.tessol.com TS-TL-FLK-082 47 / 192
KOLAS 국제공인교정기관 · ISO/IEC 17025

TESSOL Technical Library TS-TL-FLK-082

- **High and low spring zones:** The combination of pressure and the force of the high or low stop springs have caused the piston to leave the stop. The pressure applied to the piston is within the equivalent of 2 kg of the pressure corresponding to the mass loaded on the piston. The high and low spring zones indicate the piston is **about to float**. The spring zone positions are fixed.
- **High and low measurement zones:** The piston is within the zone in which a *Ready* measurement can be made (see Section 3.4.1). The pressure applied to the piston is the pressure corresponding to the mass loaded on the piston. The default value of the high and low measurement zones is ± 2.5 mm around midstroke position. This value can be adjusted in the SETUP file (see Section 3.12).
- **Midstroke:** The piston is at the middle of its stroke. The bottom of the piston (or its equivalent for hollow pistons) is at the reference level marked on the mounting post (see Section 3.11.7). There is equal stroke available to the high and low stops.

Note

The piston position monitoring system is driven by the internal ring in the base of the mass loading bell. When the bell is not installed, piston position cannot be measured. If the current mass load is less than the mass of the piston + bell, PG9000 will display < ---- > where piston position is normally displayed. If the current mass load is greater than the mass of the piston + bell but the bell is not actually installed, the piston position indication is not valid.

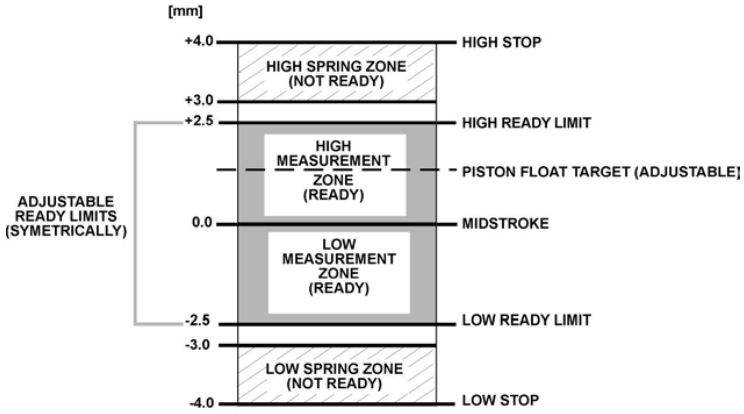

Figure 9. Piston Stroke and Zones

3.6 Manual Mass Loading

❍ PURPOSE

To provide the operator with mass loading instructions and allow mass entry in convenient nominal values which PG9000 can accurately convert to measured mass values to determine the actual mass load.

❍ PRINCIPLE

All PG9000 manual mass set masses of 0.1 kg and above, including those in the mass set, the mass loading bell and the piston assembly, are adjusted so that their true mass is within ± 20 ppm of their **nominal value**. The **nominal value** is marked on each mass. Each mass's **actual individual value** is measured more accurately than ± 20 ppm and reported in the mass set, mass loading bell or piston-cylinder module calibration report. These measured **actual values** are used by PG9000 in all of its defined pressure calculations. The **nominal mass values**, and the sequential numbers of the **nominal masses** when there are several of the same value, are used by PG9000 to describe the mass to load or the mass that is loaded. Following a few simple mass loading rules allows PG9000 to accurately transform **actual mass values** into **nominal mass values** and vice-versa so that mass loading instructions to the operator and the operator mass entries can be made in simple **nominal mass instructions** while representing **actual individual mass values.**

Since the **nominal mass values** written on the masses and the **actual values** of the individual masses are different, in *pressure to mass* mode (see Section 3.11.12) the **actual mass value** loaded on the

원문: Fluke Calibration PG9602/9607 메뉴얼(영문) · 제조사 원문 자료입니다. 사양은 제조사 사정에 따라 변경될 수 있습니다.

TESSOL Technical Library
TS-TL-FLK-082
we measure, we calibrate, we validate.
㈜테솔 · www.tessol.com TS-TL-FLK-082 48 / 192
KOLAS 국제공인교정기관 · ISO/IEC 17025

piston will be different from the mass loading instruction. In the same manner, *in mass to pressure* mode the **nominal value** of the mass load that the operator enters is different from the **actual mass** loaded on the piston. The mass value shown in the MAIN run screen (see Section 3.9) is always the **actual mass value**. The mass loading instruction given in *pressure to mass* mode and the mass value entered by the operator in *mass to pressure mode* is always the **nominal mass value**. If PG9000 mass loading protocol is followed, the conversion from **nominal mass** to **actual mass** occurs correctly allowing very simple nominal mass loading and accounting for the operator while using very accurate measured mass values for metrological calculations.

❍ **OPERATION**

Note

To avoid wear to masses and to the piston-cylinder module end of stroke stops, the piston should not be rotating when masses are loaded or unloaded. Before loading masses, stop piston rotation by hand or using the motorized rotation system (see Section 3.11.13).

PG9000 instructions to the operator of mass to load, and operator entries of the mass that is loaded, are always expressed in terms of nominal mass within 0.1 kg and in terms of grams for values under 0.1 kg. This protocol is also followed when using the AMH automated mass handler.

In *pressure to mass* mode, the instruction of the mass to load to achieve the requested pressure is formatted:

```
Load nominal mass:
kkk.k kg and gg.gg g
```

In *mass to pressure* mode, the entry of the mass currently loaded on the piston is formatted:

```
Nominal mass load:
kkk.k kg and gg.gg g
```

kkk.k and *gg.gg* must be expressed and loaded following the mass loading rules below:

Mass Loading Rules

See Sections 2.3.1.3, Installing Masses On The Mass Loading Tray and 3.6. for PG9000 mass set principles and protocol information. Refer to display examples immediately above to identify *kkk.k* and *gg.gg*. See **EXAMPLES: Mass Loading** below for mass loading examples.

PG9000 mass loading entries and instructions are always formatted:

kkk.k kg and nn.nn g

- The mass set being used must be selected as the active mass set (see Section 3.13.1.10) and must be properly set up prior to use (see Section 3.13.1.6).
- kkk.k is made up of the piston, the mass loading bell and mass set masses of 0.1 kg and greater. When using an AMH mass set, the binary mass carrier and mass lifting shaft are also included.
- kkk.k always includes the mass loading bell and then the makeup mass, if possible.
- kkk.k is made up of the largest masses possible rather than a combination of smaller masses.

EXAMPLE: To load 11.1 kg on a PG9607:

- USE the piston (1.3 kg) + the mass loading bell (0.8 kg) + the 9 kg makeup mass.
- DO NOT USE the piston + the mass loading bell + 5 kg + 2 kg #1 + 2 kg #2.

When several masses of the same nominal value are included in *kkk.k*, they are loaded in numerical sequence, low to high.

EXAMPLE: When loading three 10 kg masses:

- USE 10 kg mass #1, #2 and #3.
- DO NOT USE 10 kg mass #4, #3, #1.

This rule will be followed automatically if masses are installed and used as described in Section 2.3.1.3.

© 1998-2010 Fluke Calibration

원문: Fluke Calibration PG9602/9607 메뉴얼(영문) · 제조사 원문 자료입니다. 사양은 제조사 사정에 따라 변경될 수 있습니다.

TS-TL-FLK-082

we measure, we calibrate, we validate.
㈜테솔 · www.tessol.com TS-TL-FLK-082 49 / 192
KOLAS 국제공인교정기관 · ISO/IEC 17025

- *gg.gg* is made up of mass from the gram trim mass set (masses of 50 g to 0.01 g). These masses can be loaded in any order.

⚠ Caution

When PG9000 provides mass loading instructions and calculates the true mass of the mass currently loaded, it assumes that the mass set in use has been set up correctly (see Section 2.3.1.3). For PG9000 mass loading protocol to operate properly, the mass set in use must be EXACTLY the mass set that has been defined by the add and/or edit mass function (see Section 3.13.1.6).

EXAMPLE: Manual Mass Loading

- Mass loading instruction using PG9607 and an MS-7002-80 (80 kg) mass set:

  77.7 kg and 10.45 g

  Load:

  ❶ cylinder (1.3 kg)

  ❷ bell (0.8 kg)

  ❸ 9 kg #1 (makeup mass)

  ❹ 10 kg #1 through #6

  ❺ 5 kg #1

  ❻ 1 kg

  ❼ 0.5 kg #1

  ❽ 0.1 kg #1

  ❾ 10.45 g from trim mass set

3.7 AMH Mass Loading

3.7.1 Operating Principals

Note

Numerical reference in this section refers to Figure 10.

The purpose of the AMH system is to automatically load specified values of mass onto the PG9000 piston-cylinder. This is accomplished by lifting the complete mass set up off and above the piston-cylinder to the mass selection position, selecting the individual masses to be loaded and retained, and then placing the masses to be loaded back onto the piston.

To accomplish the mass lifting, selection and lowering function, the AMH mass handler uses four main sub-systems.

1. **Electronic and electrical controls (7):** The AMH electronic and electrical controls are located just above the mass lifter, under a protective cap. These support the AMH operating logic, a proximity sensor to detect mass load position, reading of the main mass selection column switches, operation of the column rotating motor and actuation of the pneumatic control solenoid valves.
2. **Mass lifter (8):** The mass lifter is used to lift the entire mass load to the mass selection position and then to lower the selected masses onto the piston. The mass lifter is pneumatically actuated. A flexible diaphragm (4) is connected to a lifting assembly (5). A three-way solenoid valve (e.g. 9) can be actuated to admit or exhaust drive air pressure to and from the volume under the diaphragm. Admitting drive pressure forces the lifting assembly up. Exhausting the pressure lowers it. The pressure is exhausted outside the vacuum chamber, to the AMH drive vacuum supply when there is vacuum in the chamber.

원문: Fluke Calibration PG9602/9607 메뉴얼(영문) · 제조사 원문 자료입니다. 사양은 제조사 사정에 따라 변경될 수 있습니다.

we measure, we calibrate, we validate.
㈜테솔 · www.tessol.com TS-TL-FLK-082 50 / 192
KOLAS 국제공인교정기관 · ISO/IEC 17025

TESSOL Technical Library
TS-TL-FLK-082

3. As the mass lifting assembly (5) rises, it engages a ledge on the mass lifting shaft(6), pushing it up. The mass lifting shaft is connected to the binary mass carrier (10) and the mass bell(1) sits on the binary mass carrier. As the mass lifting shaft goes up, it lifts the binary carrier and the bell, which in turn lifts the main masses (14) and the binary mass tubes(2). When the lifting assembly reaches the top of its stroke, the entire mass load is lifted completely off the piston cap (12) and the masses are in the mass selection position. In this position, the ledges on the main mass selection columns (13) align with the gaps between the main masses and the binary mass selector pins(e.g. 3) align with the holding grooves in the binary mass tubes. When gas is exhausted from the volume under the lifting assembly, it descends, lowering the selected masses onto the piston.
4. **Main mass disc selection columns (13):** The three main mass selection columns are used to retain the main mass discs (14) that are not to be loaded onto the piston. The columns are rotated synchronously by a DC motor and a drive belt (11). Contact switches are used to monitor the column position. Each column has ten sides. One side, which retains all the masses so that none are loaded, has a ledge for each mass. Each subsequent side has one less ledge, moving from the bottom up. The last side has no ledges and is used to select all the main masses for loading. When the mass load is lifted to the mass selection position, the motor is operated to rotate the columns to retain the desired number of masses. The rest of the main masses are free and are lowered onto the piston when the lifting assembly descends.
5. **Binary mass tube selection pins (3):** The binary mass selection pins are used to retain the binary mass tubes that are not to be loaded onto the piston. Three pins for each mass are located in a circular pattern around the top of each mass. The pins are pneumatically actuated and double acting. Two three-way solenoid valves (e.g. 9) control drive pressure to each set of three pins. One valve admits pressure to one side of the pin to extend it and the other admits pressure to the other side of the pin to retract it. Once the pins have been moved, the pressure is exhausted; the exhaust is to vacuum when there is vacuum in the bell jar. When the mass load is lifted to the mass selection position, the pins are operated to retain the binary masses that are not to be loaded. The rest of the binary masses are free and are placed onto the piston when the lifting assembly descends.

⚠ Warning

Do not put fingers or anything else beneath the AMH trim mass tray. AMH may lower up to 100 kg (220 lbs) onto anything that is under the trim mass tray. This could cause damage and/or injury.

© 1998-2010 Fluke Calibration

원문: Fluke Calibration PG9602/9607 메뉴얼(영문) · 제조사 원문 자료입니다. 사양은 제조사 사정에 따라 변경될 수 있습니다.

we measure, we calibrate, we validate.
㈜테솔 · www.tessol.com TS-TL-FLK-082 51 / 192
KOLAS 국제공인교정기관 · ISO/IEC 17025

TS-TL-FLK-082

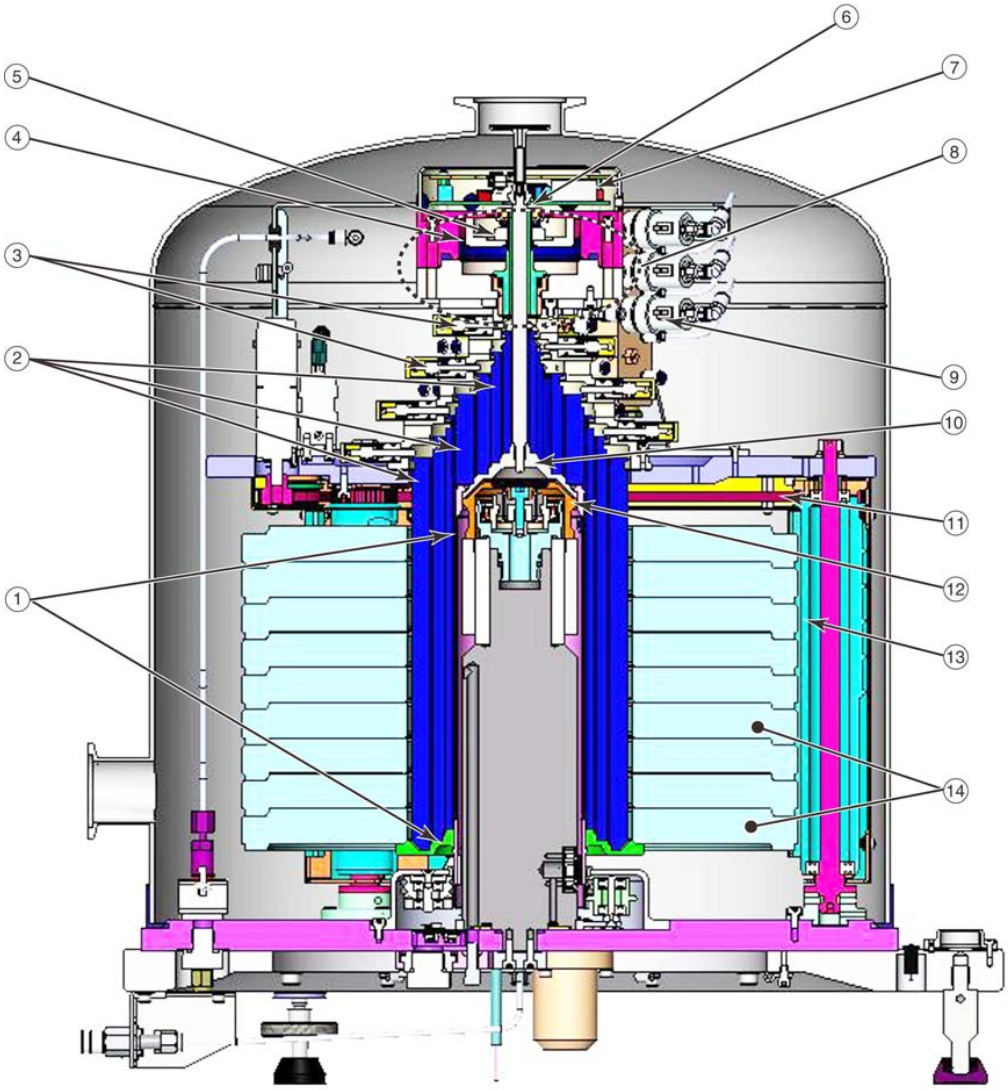

① Mass loading bell
② Binary mass tubes
③ Binary mass selection pins
④ Flexible diaphragm
⑤ Mass lifting assembly
⑥ Lifting ledge on mass lifting shaft
⑦ Electronics and electrical controls
⑧ Mass lifter
⑨ Solenoid valve
⑩ Binary mass carrier
⑪ Main mass column rotation belt
⑫ Piston cap
⑬ Main mass column
⑭ Main masses

Figure 10. AMH Schematic/Operating Principle

3.7.2 AMH Operation

Once the AMH mass handling system has been initialized (see Section 2.4.10), the mass set has been installed (see Section 2.3.1.5) and the AMH has been installed (see Section 3.7.2.1), regular operation of the AMH is controlled by the P9000 Platform in response to local commands entered on the PG Terminal or remote commands received over the PG9000 Platform's COM1 or IEEE-488 interface.

Generally, AMH operation is transparent to the operator. The AMH system changes the mass load on the piston automatically as needed when a pressure or mass load setting command is given to the PG9000. The AMH mass handler and mass set are removed only when it is necessary to access the piston-cylinder assembly.

원문: Fluke Calibration PG9602/9607 메뉴얼(영문) · 제조사 원문 자료입니다. 사양은 제조사 사정에 따라 변경될 수 있습니다.

TESSOL Technical Library

TS-TL-FLK-082

we measure, we calibrate, we validate.
KOLAS 국제공인교정기관 · ISO/IEC 17025
㈜테솔 · www.tessol.com TS-TL-FLK-082 52 / 192

Subsections of this section describe various aspects of AMH operation.

See Sections 3.7.2.1 and 3.7.2.2 for instructions on installing and removing the AMH mass handler.

See Section 3.7.2.3 for information on regular pressure to mass or mass to pressure operation.

See Section 3.7.2.4 for information on controlling the AMH mass handling system directly, outside of pressure to mass or mass to pressure operation.

See Section 3.7.2.5 for information on making and breaking the reference vacuum in AMH.

See Section 3.7.2.6 for information on accessing the piston-cylinder module when an AMH is installed.

See Section 3.7.2.7 and 3.7.2.8 for a description of the indications of the AMH LED and a listing of AMH related error messages.

See Section 4 for information on controlling PG9000 equipped with AMH by remote commands from a computer.

3.7.2.1 Installing an AMH Mass Handler on the PG9000 Platform

⚠ Caution

Perform an AMH startup before loading AMH masses (see Section 2.4.10). Startup ensures that AMH binary mass pins are retracted and main mass columns are rotated correctly for loading. Installing the AMH over the masses before performing an AMH startup risks damaging internal AMH components.

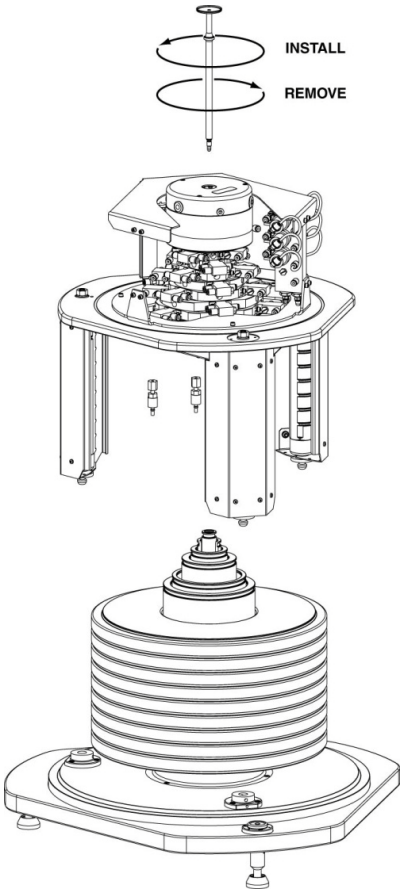

Figure 11. AMH Installation on PG9000 Platform

© 1998-2010 Fluke Calibration

원문: Fluke Calibration PG9602/9607 메뉴얼(영문) · 제조사 원문 자료입니다. 사양은 제조사 사정에 따라 변경될 수 있습니다.

we measure, we calibrate, we validate.
KOLAS 국제공인교정기관 · ISO/IEC 17025
㈜테솔 · www.tessol.com TS-TL-FLK-082 53 / 192

TESSOL Technical Library
TS-TL-FLK-082

To install the AMH mass handler on the PG9000 platform, proceed as follows (see Figure 11).

❶ **Prepare the AMH:** Before loading the masses, perform the AMH start up/verification procedure describe in Section 2.4.10. This assures that the AMH mass selection columns and pins are all correctly positioned.

Make sure that the mass lifting shaft is NOT installed on the mass bell.

❷ **Remove the AMH and load the masses:** Be careful to keep the AMH upright and not bump the AMH against the PG Base or other objects. Set the AMH down on an adjacent surface. Load the AMH mass set as described in Section 2.3.1.5.

❸ **Lift the AMH onto the PG9000 Platform:** Grasping the AMH by the horizontal platform in its middle, lift the AMH above the PG9000 platform and masses. Align it so that the cable and pneumatic connections line up with the connections on the rear side of the PG Base. Center the AMH over the mass load and gently lower it down until the AMH feet enter the holes in the PG9000 Platform. **Assure that all three feet fully enter and seat in the platform holes.** Tighten the platform set screws using a 2.5 mm allen wrench provided in the AMH accessories, one for each of the feet.

❹ **Install the mass lifting shaft:** Slip the threaded end of the shaft down through hole in the center of the mass lifter. Thread the shaft into the binary mass carrier by holding and rotating the trim mass tray. NOTE THAT SHAFT HAS A LEFT HAND THREAD SO IT MUST BE ROTATED COUNTER-CLOCKWISE TO TIGHTEN IT. Use the 3 mm allen wrench supplied in the AMH-100 accessories to tighten the assembly until you feel the mass start to rotate.

⚠ Caution

Be sure that the mass lifting shaft is fully threaded into the binary mass carrier. Thread it by hand, then tighten it using the allen wrench supplied with the AMH until you feel the masses rotate. If the mass lifting shaft is not fully threaded, the mass will not align properly with the AMH mass handling columns and pins and damage may result.

❺ **Connect the AMH drive, vent and electrical connections:** The drive and vent connections are quick connect (push to connect) fittings. Drive is designated by a red band. Vent is designated by a blue band. Mate the AMH power and signal cable to the connector on the PG base.

❻ **I If preparing to operate with vacuum in the bell jar, lift the Bell Jar onto the PG9000 platform:** Using the handles on the sides lift the Bell Jar above the PG9000 platform and masses. Center it over the mass load and gently lower it down until the bottom circumference of the Bell Jar reaches the PG9000 vacuum plate. Check that the vacuum chamber is well aligned on the vacuum plate. The Bell Jar may be rotated on the platform to the most convenient position. Make the reference vacuum connection if the KF40 connection on the side of the AMH is being used.

❼ **If preparing to operate with vacuum in the bell jar, open the AMH vacuum supply valve to admit drive vacuum to the AMH (see Section 3.7.2.5). If operating without vacuum in the bell jar, open the AMH Vent port atmosphere.**

The PG9000 with AMH is now ready to operate (see Section 3).

원문: Fluke Calibration PG9602/9607 메뉴얼(영문) · 제조사 원문 자료입니다. 사양은 제조사 사정에 따라 변경될 수 있습니다.

⚠ Caution

Do not operate the AMH when using a PG9000 in "absolute by vacuum" mode without having a vacuum supply connected to AMH-100. Always check that the AMH is supplied with vacuum before establishing reference vacuum in the bell jar. NEVER plug the AMH drive vacuum port. Failure to do so may result in damage to the binary mass pins and/or binary masses (see Section 2.3.1.4.2).

3.7.2.2 Removing a Mass Handler from the PG9000 Platform

To remove the AMH from the PG9000 platform, proceed as follows (see Figure 11).

❶ **Load all the mass:** Use **[SPECIAL]**, **<8AMH>**, **<2control>**, **<3loadall>** to load all the masses of the AMH mass set. This assures that no masses are retained in the AMH so it will be able to be lifted off the platform freely.

❷ **If present, open the bell jar to atmospheric pressure:** Check that the bell jar is open to atmosphere. It is not possible to remove the bell jar with internal pressure less than atmospheric pressure.

❸ **If present, remove the bell jar:** Disconnect vacuum connections and external vacuum measurement devices from the bell jar. Remove the bell jar and set aside.

❹ **Remove the mass lifting shaft:** Use the 3 mm allen wrench supplied in the AMH accessories to loosen and unscrew the shaft. NOTE THAT SHAFT HAS A LEFT HAND THREAD SO IT MUST BE ROTATED CLOCKWISE TO LOOSEN IT. Slip the shaft up and out of the mass handler.

❺ **Disconnect the AMH drive, vacuum and electrical connections:** Disconnect the red and blue quick connects by pulling down on the collars. These connections may be disconnected without turning off AMH supply or vacuum.

❻ **Lift the AMH off of the PG9000 Platform:** Grasping the AMH by the horizontal platform in its middle, lift the AMH straight up until it clears the masses and set it on a flat surface. The AMH mass handler weighs about 12 kg (25 lb.).

3.7.2.3 AMH Mass to Pressure or Pressure to Mass Operation

If the PG9000 is equipped with AMH, AMH automatically loads the requested mass values transparently to the operator.

Generally, the PG9000 is used to set pressures by loading mass onto the piston and adjusting the pressure under the piston to float the piston. The PG9000 supports this operation locally from its main run screen in pressure entry or mass entry mode (see Section 3.11.11). In pressure entry mode, when AMH is installed and initialized, when the operator enters the pressure to set, the corresponding mass load is loaded automatically with the AMH's 0.1 kg mass loading resolution. If the PG9000 is set for finer than 0.1 kg resolution (see Section 3.11.10), the operator is prompted to load a trim mass value manually. In mass entry mode, if a mass value with resolution finer than 0.1 kg is entered, after AMH loads the value within 0.1 kg, the operator is prompted to load the remaining trim mass value manually.

⚠ Warning

Do not put fingers or anything else beneath the AMH trim mass tray. AMH may lower up to 100 kg (220 lbs) onto anything that is under the trim mass tray. This could cause injury and/or damage.

© 1998-2010 Fluke Calibration

원문: Fluke Calibration PG9602/9607 메뉴얼(영문) · 제조사 원문 자료입니다. 사양은 제조사 사정에 따라 변경될 수 있습니다.

TS-TL-FLK-082

we measure, we calibrate, we validate.
㈜테솔 · www.tessol.com TS-TL-FLK-082 55 / 192
KOLAS 국제공인교정기관 · ISO/IEC 17025

3.7.2.4 Direct Control of AMH Functions

In normal PG9000 operation, the AMH mass handler is operated transparently to the operator when a mass change is necessary.

For AMH to be operated it must first be initialized by selecting an AMH mass set (see Section 3.13.1.10).

The status of the AMH (current masses loaded) can be viewed and its operation controlled directly using **[SPECIAL]**, **<8AMH>**.

Select **<1status>** to view which AMH masses are loaded.

Select **<2control>**, **<1up/down>** to raise and lower the mass load without changing the selected masses.

Select **<2control>**, **<2discreet>** to select specific masses to load and unload.

Select **<2control>**, **<3loadall>** to clear the AMH and load all the masses on the piston. This is the condition used to remove and install the AMH. In this state, the AMH retains no masses.

Select **<2control>**, **<1unloadall>** to clear the AMH and unload all the masses from the piston. In this state, the AMH retains all the masses.

3.7.2.5 Making and Breaking Reference Vacuum with AMH

When making and breaking a reference vacuum in the bell jar to switch the PG9000 between absolute and gauge mode operation, it is important that the AMH mass manipulation actuators also be exposed to the correct pressure. The correct pressure is vacuum in absolute mode and atmosphere in gauge mode.

If the AMH is to be operated with a vacuum in the bell jar, a vacuum supply must be connected to the drive vacuum connection quick connector so that the AMH actuators (mass lifter, mass selector pins) are evacuated when they are not pressurized. See Section 2.3.1.4.2 for information on correctly connecting the drive vacuum supply to AMH.

When using the AMH in absolute mode, the drive vacuum supply sleeve valve must be set to the VACUUM position just before establishing the reference vacuum.

When operating with atmosphere in the bell jar, set the drive vacuum supply sleeve valve to GAUGE so that the AMH actuators vent to atmosphere.

⚠ Caution

Failure to supply vacuum to the AMH before establishing a vacuum in its vacuum chamber may cause unexpected operation of the binary mass selector pins which could result in damage to the AMH mass handler and or masses (see Section 3.7.1). NEVER plug the AMH vent port.

3.7.2.6 Accessing the PG9000 Piston-Cylinder Module with AMH

To access the piston-cylinder module in a PG9000 Platform with AMH installed, the AMH mass handler and mass set must be removed.

First, remove the AMH mass handler as described in Section 3.7.2.2.

Then, remove the AMH mass set following the instructions in Section 2.3.1.5 in reverse order.

Once the AMH mass handler and mass set are removed, the piston-cylinder module can be accessed and removed by following the standard procedure (see Section 2.3.2.

원문: Fluke Calibration PG9602/9607 메뉴얼(영문) · 제조사 원문 자료입니다. 사양은 제조사 사정에 따라 변경될 수 있습니다.

3.7.2.7 AMH Indicator LED

There is a green indicator LED located on the front of the PG9000 base plate beside the spirit level (see Figure 12). This is the AMH status indicator.

Figure 12. AMH Indicator location

The indicator has four possible conditions:

- **Off:** AMH is not powered.
- **Solid green:** AMH is powered and operation is normal.
- **Slow flashing green:** AMH is powered and is in an unknown state. To recover use **[SPECIAL]**, **<8AMH>**, **<2control>**, **<3loadall>** or **<4unloadall>** or initialize AMH by selecting an AMH mass set (see Section 2.4.10., Step ❸).
- **Fast flashing green:** AMH is powered and has encountered a known error condition. The error is displayed on the PG Terminal (see Section 3.7.2.8) and available remotely using the "AMHERR" command. To recover use **[SPECIAL]**, **<8AMH>**, **<2control>**, **<3loadall>** or **<4unloadall>** or initialize AMH by selecting an AMH mass set (see Section 2.4.10, Step ❸).

3.7.2.8 AMH Error Messages

The AMH mass handler can inform the PG9000 of certain error conditions.

An AMH error condition is indicated on the PG Terminal by an error message and listing of the error number on the bottom right hand of the display.

An AMH error is indicated remotely by the PG9000 return string including the character "E" in the third "Ready indicator position". The "Ready" indication is included in the "PR" and "STATUS" commands. When an "E" has been returned, the error identification can then be retrieved using the "AMHERR" command. See the PG9000 Operation and Maintenance Manual, Remote Operation for additional information.

The possible errors are listed in Table 10.

© 1998-2010 Fluke Calibration

원문: Fluke Calibration PG9602/9607 메뉴얼(영문) · 제조사 원문 자료입니다. 사양은 제조사 사정에 따라 변경될 수 있습니다.

TS-TL-FLK-082

we measure, we calibrate, we validate.
㈜테솔 · www.tessol.com TS-TL-FLK-082 57 / 192
KOLAS 국제공인교정기관 · ISO/IEC 17025

Table 10. AMH Errors

AMH ERROR NUMBER	PG TERMINAL MESSAGE	COMMENT
None (Remote error #28)	**<AMH response fault>**	The AMH has returned a string that the PG9000 cannot identify. This is a PG9000 generated error.
None (Remote error #28)	**<AMH not responding>**	The PG9000 has not received a response from the AMH. This is a PG9000 generated error as a consequence of a time out while attempting to communicate with AMH.
2	None	Text argument is too long.
6	None	Argument out of range.
7	None	Missing or improper argument.
9	None	Unknown Command.
10	None	Invalid command suffix.
13	None	Receive buffer overflow. Buffer has been flushed.
18	None	Command not available.
60	None	Watchdog reset has occurred.
100	None	Present mass setting unknown.
102	None	6.2 kg binary mass not available on AMH.
103	**<AMH memory failure>**	Mass memory.
104	**<AMH memory failure>**	Non-volatile memory is corrupt.
105	**<AMH logic failure>**	Fatal electronics error.
106	None	Mass load must first be lifted.
107	**<AMH logic failure>**	Incorrect CPLD version.
108	**<AMH logic failure>**	CPLD logic error.
110	**<AMH unable to rotate column motor>**	Column motor switch error on column 0 (C0).
111	**<AMH unable to rotate column motor>**	Column motor switch error on column 1 (C1).
112	**<AMH unable to rotate column motor>**	Column motor switch error on column 2 (C2).
113	**<AMH unable to rotate column motor>**	Wrong column switch detected.
114	**<AMH logic failure>**	JTAG buffer overflow.
115	**<AMH logic failure>**	JTAG max retries.
116	**<AMH logic failure>**	JTAG TDO mismatch.
117	**<AMH logic failure>**	JTAG illegal state.
118	**<AMH logic failure>**	JTAG ENDxR state unknown.
119	**<AMH logic failure>**	JTAG unknown error.
120	**<AMH unable to lift mass load>**	Mass lift valve not sensed.
121	**<AMH unable to lower mass load>**	Mass is dropping unexpectedly.
122	**<AMH unable to lift mass load>**	Mass never lifted.
123	**<AMH unable to lower mass load>**	Mass is not dropping when it should.
124	**<AMH unable to lift mass load>**	IR beam malfunction. AMH will not attempt lift
125	**<AMH unable to rotate column motor>**	Column motor switch on column 1 is misaligned.
126	**<AMH unable to rotate column motor>**	Column motor switch on column 2 is misaligned.
130	**<AMH valve failure>**	6.2 kg binary mass pin engage valve (VLV#14) not sensed.
131	**<AMH valve failure>**	3.2 kg binary mass pin engage valve (VLV#6) not sensed.
132	**<AMH valve failure>**	1.6 kg binary mass pin engage valve (VLV#12) not sensed.

© 1998-2010 Fluke Calibration

원문: Fluke Calibration PG9602/9607 메뉴얼(영문) · 제조사 원문 자료입니다. 사양은 제조사 사정에 따라 변경될 수 있습니다.

AMH ERROR NUMBER	PG TERMINAL MESSAGE	COMMENT
133	**<AMH valve failure>**	0.8 kg binary mass pin engage valve (VLV#4) not sensed.
134	**<AMH valve failure>**	0.4 kg binary mass pin engage valve (VLV#10) not sensed.
135	**<AMH valve failure>**	0.2 kg binary mass pin engage valve (VLV#2) not sensed.
136	**<AMH valve failure>**	0.1 kg binary mass pin engage valve (VLV#8) not sensed.
137	**<AMH valve failure>**	6.4 kg binary mass pin disengage valve (VLV#15) not sensed.
138	**<AMH valve failure>**	3.2 kg binary mass pin disengage valve (VLV#7) not sensed.
139	**<AMH valve failure>**	1.6 kg binary mass pin disengage valve (VLV#13) not sensed.
140	**<AMH valve failure>**	0.8 kg binary mass pin disengage valve (VLV#5) not sensed.
141	**<AMH valve failure>**	0.4 kg binary mass pin disengage valve (VLV#11) not sensed.
142	**<AMH valve failure>**	0.2 kg binary mass pin disengage valve (VLV#3) not sensed.
143	**<AMH valve failure>**	0.1 kg binary mass pin disengage valve (VLV#9) not sensed.

3.8 Controlled Clearance Pressure (PG9607)

The PG9607 model of PG9000 allows an independent pressure to be applied to the inside of the piston. This pressure is the Controlled Clearance Pressure (CCP). The purpose of this feature is to allow the piston to be artificially expanded, varying the size of the gap between the piston and cylinder. The ability to predictably vary the size of the gap between the piston and the cylinder can be useful in analyzing piston-cylinder behavior.

Note

In normal operation, the Controlled Clearance Pressure (CCP) is equal to the measured pressure, thus the pressure applied to the TEST port should also be applied to the CCP port.

The controlled clearance pressure is introduced through the CCP port on the back of the PG9607 platform. The pressure is applied through the mounting post to the inside of the piston (see Figure 6, Ref. 8). The pressure is contained by the two piston sealing O-rings (see Figure 6, Refs. 10a, 10b).

The piston sealing O-rings are positioned on the ends of the piston so that the deformation due to pressure along the active zone of the piston is constant and parallel.

The expansion of the piston with pressure can be predicted using thick walled cylinder stress/strain relations and the mechanical properties of the piston material (tungsten carbide). The result is 0.16 micron on the diameter/MPa.

A typical 50 mm piston-cylinder assembly has a radial gap of 0.9 micron so a CCP of 3 MPa will reduce the gap by about 50 %. Around 5 MPa, the CCP may close the gap completely causing mechanical contact between the piston-cylinder and damage to the parts.

⚠ Caution

A Controlled Clearance Pressure (CCP) of about 5 MPa may close the gap between the piston and cylinder completely causing metal to metal contact between the two parts and possible damage.

© 1998-2010 Fluke Calibration

원문: Fluke Calibration PG9602/9607 메뉴얼(영문) · 제조사 원문 자료입니다. 사양은 제조사 사정에 따라 변경될 수 있습니다.

we measure, we calibrate, we validate.
KOLAS 국제공인교정기관 · ISO/IEC 17025

3.9 Main Run Screen

The PG9000 main run screen is its home display that is reached upon powering up and from which other functions and menus are accessed. It is the top level of all menu structures.

The main run screen is where PG9000 is left in normal operation. It displays the pressure defined by PG9000, *Ready/Not Ready* condition and a variety of other information.

Note

The screen described below is called the MAIN run screen. The SYSTEM and AMBIENT screens (see Sections 3.11.5 and 3.11.6) are also run screens in the sense that all the other functions may be accessed directly from them and pressure or mass entries may be made from them. See Section 3.10 for a description of PG9000's main menu/function structure.

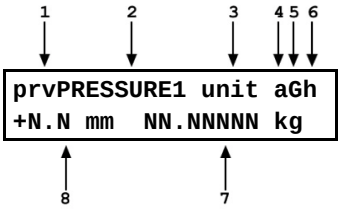

1. **<prv>:** Three *Ready/Not Ready* indication characters (from left to right: piston position, piston rotation, vacuum reference) (see Section 3.4). Each character indicates as follows:

   <p>: Piston Position *Ready/Not Ready*. **<*>** when *Ready*, **<↑> when** *Not Ready* due to piston above measuring zone, **<↓> when** *Not Ready* due to piston below measuring zone, **<?>** if piston position not available or out of range. Flashes if condition is *Not Ready* and piston is floating (see Section 3.4.1). Indicates *Not Ready* when automated pressure generation is adjusting pressure.

   <r>: Piston Rotation *Ready/Not Ready*. **<*>** when *Ready*, **<<>** when *Not Ready* due to piston rotation rate too low or motorized rotation engaged, **<?>** if piston position not available or out of range. Flashes if condition is *Not Ready* and piston is floating. (see Section 3.4.2).

   <v>: Vacuum Reference *Ready/Not Ready* (if available). **<*>** when *Ready*, **<v>** if *Not Ready* due to vacuum not below ready limit. Flashes if condition is *Not Ready* and piston is floating (see Section 3.4.3).

2. **<PRESSURE1>:** Numerical value and sign of the pressure defined by PG9000 with current mass loaded on current piston when all *Ready/Not Ready* indication characters indicate *Ready.*

3. **<unit>:** Current pressure unit of measure (see Section 3.11.3).

4. Current measurement mode. **<a>** for absolute, **<g>** for gauge, **<d>** for differential (see Section 3.11.4).

5. Automated pressure generation status. **<G>** if automated pressure generation is ON. The **<G>** flashes if automated pressure generation is ON and active, blank if automated pressure generation is not ON (see Section 3.11.9).

6. **DUT** head correction status. **<h>** if a head correction is currently being applied, blank if head height is zero (see Section 3.11.7).

7. **<NN.NNNNN kg>:** Current mass load in actual mass (assuming mass loading instructions have been followed and/or mass loading entries are correct (see Section 3.6).

8. **<± N.N mm>:** Current piston position in millimeters from midstroke position. Positive values are above midstroke, negative values below. Indicates **< ---- >** if piston position not available or out of range (see Section 3.5).

Note

- **When a number is too large to display in the allocated screen space, PG9000 displays <********> or <OVERFLOW>.**
- **PG9000 has a screen saver function that causes the display to dim if NO key is pressed for 10 minutes. Pressing a key restores full power to the display.**

  The screen saver activation time can be changed or screen saving can be completely disabled (see Section 3.13.4.1).

원문: Fluke Calibration PG9602/9607 메뉴얼(영문) · 제조사 원문 자료입니다. 사양은 제조사 사정에 따라 변경될 수 있습니다.

TESSOL Technical Library

TS-TL-FLK-082

we measure, we calibrate, we validate.
KOLAS 국제공인교정기관 · ISO/IEC 17025
㈜테솔 · www.tessol.com TS-TL-FLK-082 60 / 192

3.10 General Function/Menu Flow Chart

Local operator interface with PG9000 is provided by PG Terminal keypad and display. Normal PG9000 operation is organized around run screens from which functions and menus are accessed. The run screens include:

- **MAIN run screen:** Displays *Ready/Not Ready*, defined pressure, piston position and mass load.
- **SYSTEM run screens:** Display piston position, rotation, temperature and reference vacuum.
- **AMBIENT run screen:** Displays ambient pressure temperature, relative humidity and local gravity.

Figure 13 outlines the operating protocol of the run screens and associated key presses.

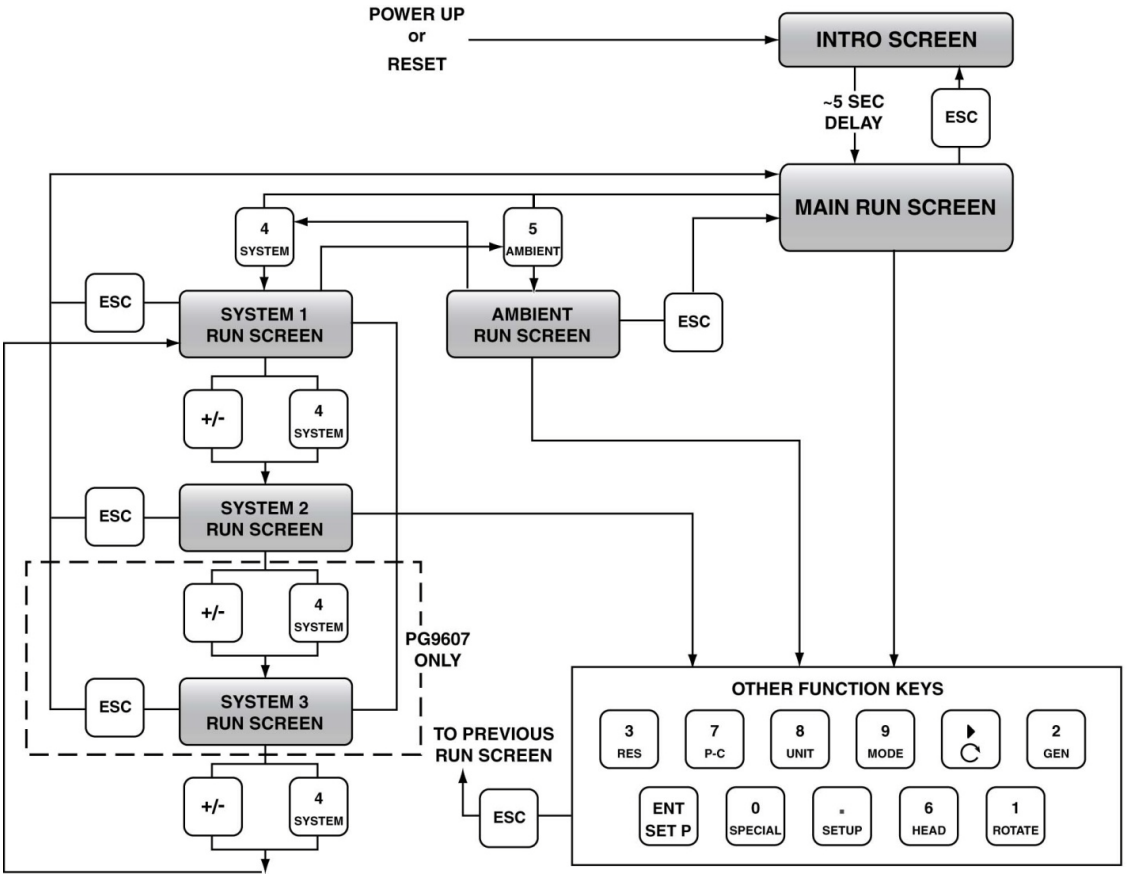

Figure 13. Run Screen Flow Chart

3.11 Direct Function Keys

3.11.1 Direct Function Keys Summary

Local operator interface with PG9000 is provided by PG Terminal keypad and display. To minimize the use of multi-layered menu structures, the keypad's numerical keys also provide direct access to the most commonly used functions. The function accessed is labeled on the bottom half of the each key. Direct function keys are active whenever PG9000 is in a run screen (MAIN, SYSTEM or AMBIENT). Table 14 summarizes the operation of the direct function keys. Section 3.10 provides a flow chart of PG Terminal general operation. See corresponding manual Sections to 3.11.1 to 3.13.9.

© 1998-2010 Fluke Calibration

원문: Fluke Calibration PG9602/9607 메뉴얼(영문) · 제조사 원문 자료입니다. 사양은 제조사 사정에 따라 변경될 수 있습니다.

we measure, we calibrate, we validate.
㈜테솔 · www.tessol.com TS-TL-FLK-082 61 / 192
KOLAS 국제공인교정기관 · ISO/IEC 17025

TESSOL Technical Library
TS-TL-FLK-082

Note

It may be useful to keep a copy of Table 11 near the PG9000, especially when first becoming acquainted with its operation.

Table 11. Summary of PG9000 Direct Function Key Operations

DIRECT FUNCTION KEYS ARE ACTIVE FROM ANY RUN SCREEN (main, ambient, system). See corresponding manual sections for full detail.			
0 SPECIAL	Menu of less frequently used internal functions and settings including resets, user preferences, internal calibration and remote interface setup.	3 RES	Set the resolution of PG9000 mass loading commands (0.01 g to 0.1 kg).
. SETUP	Edit and select files that determine the sources of the values for the variables PG9000 uses in calculations of reference pressures.	4 SYSTEM	Access SYSTEM run screens which display current measurements of piston behavior, piston-cylinder temperature and reference vacuum if present. Advances through the screens.
← P OR M	Select pressure to mass or mass to pressure operation.	5 AMBIENT	Access AMBIENT run screen which displays current values of barometric pressure, ambient temperature, ambient humidity and local gravity as specified in the active SETUP file.
→ ↻	Activate motorized control manually. Activates when pressed, deactivates when released.	6 HEAD	Adjust height of DUT fluid head correction. Set to zero to defeat head correction.
ENTER SET P	From a run screen: Access mass or pressure setting commands. From other screens: Select menu choice, enter value, confirm selection.	7 P-C	Select active piston-cylinder module (range).
1 ROTATE	Turn automatic activation of motorized rotation ON/OFF.	8 UNIT	Set unit of measure in which pressures are defined. Choice of units available from this key can be customized.
2 GEN	Turn automated pressure generation/control ON/OFF, adjust control parameters, set upper limit for automated pressure control. Has no effect if an automated pressure generation/control component is not part of the PG9000 system.	9 MODE	Set pressure measurement mode (gauge, absolute, differential).

3.11.2 [P-C]

❍ PURPOSE

To view and/or change the active piston-cylinder.

Note

- **[P-C] is for selecting the active piston-cylinder only. Piston-cylinders can be added and deleted and their characteristics can be edited by pressing [SPECIAL] and selecting <1PC/MS> (see Section 3.13.1).**
- **The active mass set and mass loading bell are selected by pressing [SPECIAL] and selecting <1PC/MS> (see Section 3.13.1).**

❍ PRINCIPLE

To make valid pressure and mass load calculations, PG9000 must know the exact characteristics of the piston-cylinder module that is currently in use. See Section 7.2 for detailed information on PG9000 pressure and mass calculations.

원문: Fluke Calibration PG9602/9607 메뉴얼(영문) · 제조사 원문 자료입니다. 사양은 제조사 사정에 따라 변경될 수 있습니다.

TESSOL Technical Library

TS-TL-FLK-082

we measure, we calibrate, we validate.
KOLAS 국제공인교정기관 · ISO/IEC 17025
㈜테솔 · www.tessol.com TS-TL-FLK-082 62 / 192

Most PG9000s may be used with more than one piston-cylinder module. Detailed characteristics on up to 18 piston-cylinder modules are stored in files. These files can be added, deleted, viewed and edited by pressing **[SPECIAL]**, **<1pc/ms>** (see Section 3.13.1).

The P-C function provides rapid access, from any run screen, to viewing the piston-cylinder modules available and selecting one to be active.

❍ **OPERATION**

Pressing **[P-C]** activates the piston-cylinder module viewing and selecting function. Pressing **[P-C]** again or **[←]** or **[→]** while in the P-C function steps through displays of available piston-cylinder modules.

When **[P-C]** is first pressed, a summary of the characteristics of the active piston-cylinder module is displayed, for example:

1. Nominal pressure to mass conversion coefficient of the piston-cylinder module that is currently selected (active). This value is calculated from the effective area of the piston-cylinder and is in kPa (if < 1 MPa) or MPa.
2. Serial number of the active piston-cylinder module.
3. Current pressure unit of measure.
4. Nominal pressure in current pressure units resulting from loading all the mass of the active mass set.
5. Nominal pressure in current pressure units resulting from loading the piston and mass bell only.

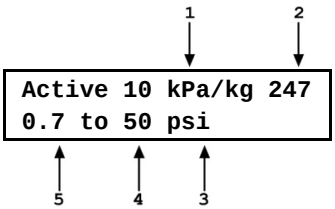

Pressing [P-C] again or [←] or [→] causes the screen to step through the other available piston-cylinder modules in the sequence that they were added.

Pressing **[ENTER]** while in the P-C function causes PG9000 to select the currently displayed piston-cylinder module as the active piston-cylinder module.

Pressing **[ESCAPE]** while in the P-C function returns to the main run screen without changing piston-cylinder modules.

Note

- **The pressure unit of measure in which the range offered by the piston-cylinder module using the active mass set is displayed can be changed by pressing [UNIT] (see Section 3.11.3).**
- **When the current pressure unit of measure is an altitude unit, piston-cylinder module range is expressed in kPa if the altitude unit is meters (m) or psi if the altitude unit is feet (ft).**

3.11.3 [UNIT]

❍ **PURPOSE**

To specify the unit of measure in which defined pressures are expressed.

❍ **PRINCIPLE**

PG9000 supports a wide variety of pressure units of measure. Internally, PG9000 always operates in Pascal [Pa] (the SI unit of pressure). Values of pressure are represented in other units by the application of conversion factors to convert from Pascal. See Section 7.1.1 for Unit of Measure Conversions.

The pressure unit of measure selection (e.g., psi, kPa, etc.) is separate from the pressure measurement mode selection (gauge, absolute or differential). See Section 3.11.4 for information on changing the measurement mode.

❍ **OPERATION**

To change the pressure unit of measure, press the **[UNIT]** function key from any run screen. The display is (default units depend on model):

```
1kPa 2Mpa 3Pa
4bar 5psi 6kcm2
```


© 1998-2010 Fluke Calibration

원문: Fluke Calibration PG9602/9607 메뉴얼(영문) · 제조사 원문 자료입니다. 사양은 제조사 사정에 따라 변경될 수 있습니다.

TS-TL-FLK-082

we measure, we calibrate, we validate.
㈜테솔 · www.tessol.com TS-TL-FLK-082 63 / 192
KOLAS 국제공인교정기관 · ISO/IEC 17025

The cursor is on the number corresponding to the active unit. To change the pressure unit, select the desired unit. The display returns to the previous run screen with the selected unit active.

If the pressure unit selected is inWa, the reference temperature for water density must be specified. When inWa is selected as the unit, the next display is:

```
Select inWa ref temp
4°C     20°C     60°F
```

Select the desired reference temperature for water density using the **[←]** or **[→]** key to move the cursor. Pressing **[ENTER]** returns to the main run screen with inWa based on water density at the selected reference temperature as the active pressure unit. The current inWa reference temperature can be viewed by observing the position of the cursor in the reference temperature screen.

Note

- **See Section 7.1.17.1.1 for tables of the pressure unit of measure conversion factors used by PG9607.**
- **The UNIT function provides rapid access to a choice of up to six units. The choice of units can be customized from a wider selection by the user (see Section 3.11.3.1). The default units are:**

  1kPa 2MPa 3Pa 4bar 5psi 6kcm2
- **To restore the default UNIT function settings, use the Unit Reset (see Section 3.13.9.2).**
- **Certain internal and/or metrological functions (e.g., vacuum reference pressure) are always represented in Pascal [Pa], regardless of the active pressure unit of measure.**
- **When the current pressure unit of measure is an altitude unit, atmospheric pressure in the AMBIENT run screen is expressed in kPa if the altitude unit is meters (m) or psi if the altitude unit is feet (ft).**

3.11.3.1 Customizing Pressure Units Available Under the UNIT Function

❍ PURPOSE

To customize the selection of pressure units that are available for selection from the **[UNIT]** function key.

❍ PRINCIPLE

The UNIT function provides a choice of different pressure units of measure depending on the PG9000 model. The units that are available by default are those indicated in the Note in Section 3.11.3. However, PG9000 supports many other pressure units of measure. Other units can be made available for selection and units can be deleted by customizing the UNIT function. This allows PG9000 to offer a very wide selection of units while simplifying day to day operation. The typical user will customize the **[UNIT]** function key to support the six most commonly used units.

원문: Fluke Calibration PG9602/9607 메뉴얼(영문) · 제조사 원문 자료입니다. 사양은 제조사 사정에 따라 변경될 수 있습니다.

TS-TL-FLK-082

we measure, we calibrate, we validate.
㈜테솔 · www.tessol.com TS-TL-FLK-082 64 / 192
KOLAS 국제공인교정기관 · ISO/IEC 17025

❍ OPERATION

To customize the **[UNIT]** function key, from the main run screen press **[SETUP]** and select **<2PresU>**. The display is:

1. The UNIT number in the **[UNIT]** menu that is to be changed.

```
                    1
                    ↓
Set up user unit #6
```

Enter the number of the unit position that you would like to change. The display becomes:

```
Unit #6   1SI 2other
3altitude 4user
```

Select the desired pressure unit category. SI units include units *based* on SI such as mmHg. Select the desired unit from the unit list (see Table 15).

Table 12. Pressure Units of Measure Available

<1SI>	<2Other>	<3altitude>*	<4User>**
<1Pa> <2Kpa> <3MPa> <4mbar> <5bar> <6mmHg> <7mmWa>	<1psi> <2psf> <3inHg> <4inWa> <5kcm2> <6Torr> <7mTor> <8none>	<1m> <2ft>	<1user>

*** <3altitude>:** in absolute by vacuum mode only.

** **<4user>:** User defined unit. .

The UNIT function display is not required to display six units. To delete the current unit from the UNIT screen and show no unit, select **<2other>**, **<6none>** for that unit number.

If **<4user>** was selected, the user unit must be defined. The display is:

1. Entry field.

```
Define user unit:
1.000000 Units/Pa
↑
1
```

Enter the number of user units per Pascal [Pa] in the entry field. Pressing **[ENTER]** defines the user unit and returns to the **<Set up unit #>** screen.

Note

- **See Section 7.1.1 for the pressure unit of measure conversion factors used by PG9000.**
- **The user defined unit can be assigned a user defined label using the UDU remote command (see Section 4.3.4.2).**

3.11.4 [MODE]

❍ PURPOSE

To specify the measurement mode (gauge, absolute or differential) in which PG9000 defines reference pressures.

Note

Pressure measurement mode and unit of measure are not the same thing. See Section 3.11.3 for information on the pressure unit of measure.

© 1998-2010 Fluke Calibration

원문: Fluke Calibration PG9602/9607 메뉴얼(영문) · 제조사 원문 자료입니다. 사양은 제조사 사정에 따라 변경될 수 있습니다.

we measure, we calibrate, we validate.
㈜테솔 · www.tessol.com TS-TL-FLK-082 65 / 192
KOLAS 국제공인교정기관 · ISO/IEC 17025

TESSOL Technical Library
TS-TL-FLK-082

❍ **PRINCIPLE**

Pressure defined relative to vacuum is generally referred to as *absolute pressure*.

Pressure defined relative to atmospheric pressure is generally referred to as *gauge pressure*, with pressure below atmosphere called *negative gauge pressure*.

Pressure defined relative to another pressure that may be, but is not necessarily atmospheric pressure, is generally referred to as *differential pressure*.

PG9000s can define absolute, gauge, negative gauge and differential pressures. These are referred to as measurement *modes*.

The specific PG9000 measurement modes are as follows:

- ***gauge***: Defines gauge pressure by leaving the PG9000 mass load open to atmosphere. This mode does not allow negative gauge pressures. The minimum gauge pressure is the pressure resulting from loading the combined mass of the piston and the bell on piston-cylinder effective area.
- ***absolute by adding atmospheric pressure (absolute by ATM)***: Defines absolute pressure by defining a pressure in the same manner as in *gauge mode* and adding the value of atmospheric pressure measured by a barometer. The barometer can be PG9000's on-board sensor or a remote RS232 barometer.
  - ***absolute by vacuum (absolute by vac)***: Defines absolute pressure by measuring relative to an evacuated bell jar. This mode is required for setting absolute pressures under atmospheric pressure and for lowest uncertainty under about 1 MPa (150 psi).
  - ***differential (dif)***: Defines differential pressures at an absolute static pressure between vacuum and two atmospheres by defining an absolute pressure relative to an evacuated bell jar and subtracting static pressure monitored by a digital pressure indicator. An offsetting technique ensures that only the digital indicator's resolution and very short term repeatability influence the measurement results. Allows positive and negative differential pressure (including gauge pressures) with one common hardware setup. Covers pressures very near and at zero without limitations due to piston-cylinder size and mass loads (see Section 3.11.4.1).

❍ **OPERATION**

To change the pressure measurement mode, press **[MODE]** from any run screen. The resulting display depends on the PG9000 Model:

The cursor is on the number corresponding to the current measurement mode.

```
Measurement mode:
1g 2avac 3aatm 4dif
```

[MODE] Screen

Selecting **<2avac>** accesses *absolute by vacuum* mode. Selecting **<3aatm>** accesses *absolute by ATM* mode. Selecting **<4dif>** accesses *differential* mode (see **PRINCIPLE** above and Section 3.11.4.1).

Making a measurement mode selection returns to the previous run screen with the selected mode active.

Note

When using an AMH automated mass handler, be sure to apply drive vacuum to the AMH when switching operation to absolute by vacuum mode (see 3.7.2.5).

3.11.4.1 Differential Measurement Mode

❍ **PURPOSE**

To define gauge pressures near and under atmospheric pressure that cannot be covered in conventional gauge mode; to define pressures at a static pressure near atmospheric pressure but other than atmospheric pressure.

원문: Fluke Calibration PG9602/9607 메뉴얼(영문) · 제조사 원문 자료입니다. 사양은 제조사 사정에 따라 변경될 수 있습니다.

TS-TL-FLK-082

we measure, we calibrate, we validate. ㈜테솔 · www.tessol.com TS-TL-FLK-082 66 / 192

KOLAS 국제공인교정기관 · ISO/IEC 17025

Note

Differential mode operation requires that the PG9000 SETUP AtmP selection be for an external barometer connected to COM2 (see Section 3.12, 3.13.5.4). Differential mode operation also requires the PG9000 Differential Mode Interconnections Kit P/N 3070127, which includes the Differential Mode Controller.

❍ PRINCIPLE

Differential mode is designed to allow PG9000 to define pressures which piston gauges have typically not covered or for which they have been difficult to use. This includes positive and negative gauge pressures near zero, for example ± 2.5 kPa (10 in. H2O); as well as low differential pressures at low absolute static pressures, for example 0 to 2.5 kPa (20 Torr) at 15 kPa absolute (2.2 psia) static pressure.

The principal of differential mode is to define a differential pressure as the difference between an absolute pressure relative to vacuum and a second absolute pressure (the static pressure) measured by a precision Reference Pressure Monitor (RPM). An offsetting procedure “tares” the RPM so that the uncertainty contributed to the differential pressure by the RPM’s measurement is a function of the RPM resolution and short term repeatability rather than its absolute accuracy and long term stability.

For differential mode operation, the static pressure is set to the desired value as measured by the RPM (atmospheric pressure for gauge pressure measurements). The RPM offset at the static pressure is determined by applying the static pressure as defined by the PG9000 following:

$$RPM_{offset} = PGRPM_{start} - RPM_{indicate}$$

Where:

PGRPM$_{start}$	=	Pressure applied by PG9000 to RPM (nominally equal to **RPM**$_{start}$)
RPM$_{indicate}$	=	RPM reading when **PGRPM**$_{start}$ is applied to RPM test port

Once the RPM offset has been determined, differential pressures are defined by subtracting the static pressure measured by the RPM from an absolute pressure defined by the PG9000 following:

$$PG_{dif} = PG_{abs} - RPM_{current} - RPM_{offset}$$

Where:

Pg$_{dif}$	=	Differential pressure defined by PG9000
Pg$_{abs}$	=	Absolute pressure defined by PG9000
RPM$_{current}$	=	Current RPM indication of static pressure
RPM$_{offset}$	=	Disagreement between PG9000 and RPM at the operating static pressure

For differential mode operation, the PG9000 Differential Mode Interconnections Kit should be used to provide the DUT high and low test connections and support the RPM offsetting procedure (see Figure 14 and Section 3.11.4.1). A precision Reference Pressure Monitor, such as a **DH Intruments** RPM, must be selected for the AtmP source in SETUP (see Section 3.12, 3.13.5.4).

PG9000 differential measurement mode manages the data acquisition and handling to support differential mode operation without operator effort. Differential mode operation requires setting the static pressure at which differential measurements are to be made and regular determination of the RPM offset. These functions are supported under **[MODE]**, **<4dif>**.

© 1998-2010 Fluke Calibration

원문: Fluke Calibration PG9602/9607 메뉴얼(영문) · 제조사 원문 자료입니다. 사양은 제조사 사정에 따라 변경될 수 있습니다.

TS-TL-FLK-082

we measure, we calibrate, we validate.
㈜테솔 · www.tessol.com TS-TL-FLK-082 67 / 192
KOLAS 국제공인교정기관 · ISO/IEC 17025

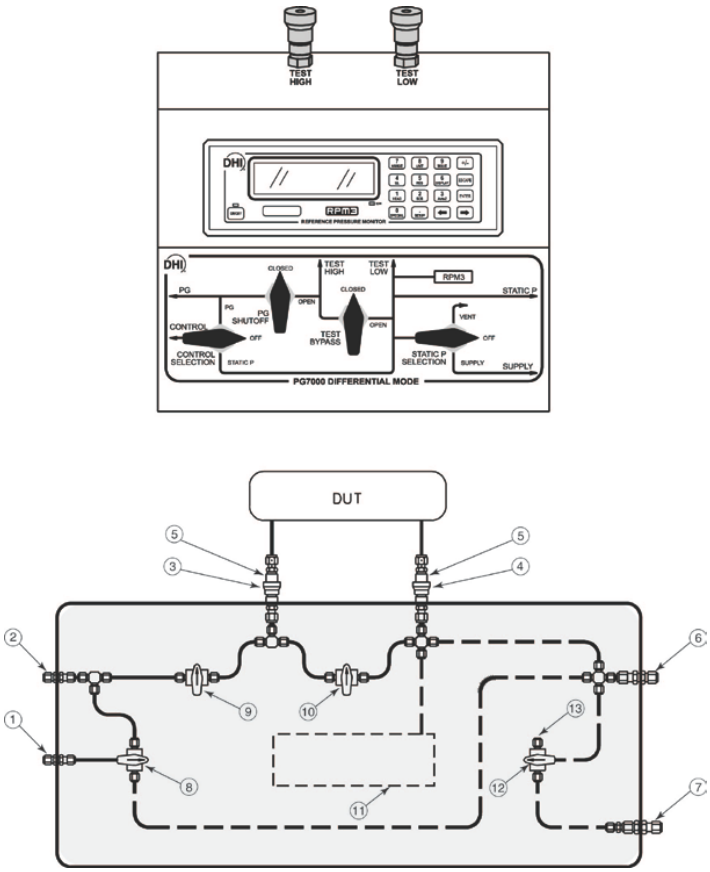

① PG/STATIC P CONTROL Port
② PG Port
③ TEST HIGH Port (Quick Connection)
④ TEST LOW Port (Quick Connection)
⑤ 1/8 in. NPT F or 4T Quick Connector
⑥ STATIC P Port
⑦ STATIC P SUPPLY Port
⑧ CONTROL SELECTION Valve
⑨ PG SHUTOFF Valve
⑩ TEST BYPASS Valve
⑪ Reference Pressure Monitor (RPM) (Optional)
⑫ STATIC P SELECTION Valve
⑬ Static Pressure Exhaust (Internal)

Figure 14. Differential Mode Controller Schematic

Note

Fluke Calibration Technical Note 9940TN02 provides more detailed information on differential mode principles and includes a complete uncertainty analysis. Consult Fluke Calibration or visit www.dhinstruments.com.

❍ OPERATION

To select differential mode operation and access differential mode functions press **[MODE]** and select **<4dif>**.

Differential mode operation includes:

- Selecting differential mode, setting static pressure and finding the RPM offset (see Section 3.11.4.1, Selecting Differential Mode, Setting Static Pressure, Finding RPM Offset (**<1run>**).
- Operating in differential mode (see Section 3.11.4.1, Operating In Differential Mode).
- Viewing differential mode static pressure and RPM offset (see Section 3.11.4.1, Viewing Static Pressure and RPM Offset (**<2view>**).

Selecting Differential Mode, Setting Static Pressure, Finding RPM Offset (<1run>)

원문: Fluke Calibration PG9602/9607 메뉴얼(영문) · 제조사 원문 자료입니다. 사양은 제조사 사정에 따라 변경될 수 있습니다.

we measure, we calibrate, we validate.
KOLAS 국제공인교정기관 · ISO/IEC 17025

Note

To operate in differential mode and/or execute the RPM offset determination procedure, the AtmP selection under SETUP must be external (COM2) (see Section 3.12). If this is not the case, an error message will be displayed (<Dif mode requires COM2 AtmP SETUP>) when attempting to activate differential mode.

To select differential mode operation and/or execute the RPM offset determination procedure, press **[MODE]** and select **<4dif>**, **<1run>**. The display is:

1. Current value of RPM offset. Always in Pascal [Pa].

```
                    1
                    ↓
Offset:     9.03 Pa
New offset? 1no 2yes
```

Select **<1no>** to use the existing RPM offset and return the previous run screen in differential mode (see Section 3.11.4.1, Operating in Differential Mode).

Note

The RPM offset should be redetermined any time the static pressure value is changed, as well as at the beginning of each calibration or test sequence. If the difference in the value of the RPM offset in subsequent determinations is < 0.1 Pa, then less frequent offset determinations may be considered.

Select **<2yes>** to proceed with a new determination of the RPM offset (see Section 3.9.4.1, **PRINCIPAL**. The display is:

1. Current pressure reading of the RPM in the current units of.

```
Set RPM P & [ENT]
96.57785 kPa a
↑
1
```

Table 13. Valve Settings for Setting Differential Mode Static Pressure

VALVE	VALVE SETTING
Control Selection	Static P
PG Shutoff	Closed
Test Bypass	Open
Static P Selection	Off If static pressure is atmospheric pressure VENT or OFF

With the Differential Mode Controller valves (see Figure 14) set as indicated in Table use the system's pressure control component to set the desired static pressure value as read by the RPM.

If the desired static pressure is atmospheric pressure (for example, for low gauge and negative gauge differential pressures), set the STATIC P SELECTION valve to VENT.

If a REFERENCE VOLUME is connected to the STATIC P port and the desired static pressure is less than atmospheric pressure, consider setting the STATIC P SELECTION VALVE to SUPPLY. This will connect the pressure setting vacuum source directly to the reference volume and reduce pull down time.

© 1998-2010 Fluke Calibration

원문: Fluke Calibration PG9602/9607 메뉴얼(영문) · 제조사 원문 자료입니다. 사양은 제조사 사정에 따라 변경될 수 있습니다.

we measure, we calibrate, we validate.
KOLAS 국제공인교정기관 · ISO/IEC 17025

⚠ Caution

Be sure the TEST BYPASS valve is in the OPEN position before adjusting the static pressure. Failure to do so will cause differential pressure to be generated across the HIGH and LOW TEST ports which may overpressure the DUT.

When the static pressure, as indicated by the RPM, has been set to the desired value, press **[ENTER]**. PG9000 reads the RPM and calculates the mass to load on PG9000 to set the pressure value indicated by the RPM. The display is:

```
Load mass & vac:
9.2 kg & 32.47 g
```

Note

When using an AMH automated mass handler, the mass value to set the value indicated by the RPM is always loaded with resolution of 0.1 kg. This is to avoid having to break the reference vacuum to load trim masses. The differential pressure values are loaded with the resolution specified in [RES] (see Section 3.11.10).

This is the standard nominal mass loading in instruction display of pressure to mass mode (see Section 3.11.11.1). The mass loading instruction is always given with 0.01 g resolution regardless of the current mass loading resolution setting (see Section 3.11.10). Load the mass value following PG9000 mass loading protocol (see Section 3.6). If an AMH automated mass handler is being used, the mass is loaded automatically and default mass loading resolution of 0.1 kg is used.

Set the PG9000 Differential Mode Controller (see Figure 14) to apply the pressure defined by the PG9000 to the RPM (see Table 14).

Table 14. Valve Settings to Apply PG9000 Pressure to the RPM for Differential Mode Offsetting

VALVE	VALVE SETTING
Control Selection	PG
PG Shutoff	Open
Test Bypass	Open
Static P Selection	Off If static pressure is atmospheric pressure VENT or OFF

원문: Fluke Calibration PG9602/9607 메뉴얼(영문) · 제조사 원문 자료입니다. 사양은 제조사 사정에 따라 변경될 수 있습니다.

Once the valves have been properly set and the mass has been loaded, install the bell jar and establish vacuum under the bell jar. Then press **[ENTER]**. The display is:

1. Current pressure reading of the RPM in the current units of measure.
2. Standard main run screen piston position indication (see Section 3.7).
3. Current RPM offset (pressure applied by PG9000 - RPM indication). Indicates ******* if the value is > 9999.99 Pa. Pressure unit of measure is always Pascal [Pa].

```
<<* 99.9785 kPa a h
-3.5   Off: -7.89 Pa
```

Float and rotate the PG9000 piston-cylinder. When the PG9000 is *Ready* (see Section 3.4), press **[ENTER]**. Wait about 6 seconds while the PG9000 takes and averages multiple readings. The display is:

1. RPM offset currently in use.
2. New RPM offset just measured.

```
Old offset: -7.72 Pa
New offset: -7.89 Pa
```

To record the new RPM offset and go to the previous run screen in differential mode with the new RPM offset active, press **[ENTER]**.

To return to the **<New offset?>** screen, press **[ESCAPE]**.

See Section 3.11.4.11, Operating in Differential Mode, for information on differential mode operation.

Note

- **The value of the RPM offset typically should be inside of ± 20 Pa. An RPM offset value outside of this range may indicate a poorly calibrated RPM or a problem with the offset determination procedure.**
- **The difference between the RPM offset at the beginning and at the end of a test will be reflected as zero drift of the differential pressures defined during the test. To quantify this value, perform the RPM offset procedure at the beginning and at the end of a test and evaluate the difference between the starting and ending RPM offset values.**

Operating in Differential Mode

⚠ Caution

Differential mode is often used to calibrate DUTs with very low differential pressure ranges. These can easily be over pressured and damaged by inadvertently applying excessive pressure to one port. OPEN the MPC1-D BYPASS valve to zero the differential across the DUT when there is a risk of overpressure.

From a practical standpoint, operating in differential mode is nearly identical to operating in absolute by vacuum mode (see Section 3.11.11). Unless an AMH automated mass handler is used, vacuum under the bell jar must be broken to make mass load changes and reestablished to set a pressure.

© 1998-2010 Fluke Calibration

원문: Fluke Calibration PG9602/9607 메뉴얼(영문) · 제조사 원문 자료입니다. 사양은 제조사 사정에 따라 변경될 수 있습니다.

we measure, we calibrate, we validate.
㈜테솔 · www.tessol.com TS-TL-FLK-082 71 / 192
KOLAS 국제공인교정기관 · ISO/IEC 17025

TESSOL Technical Library
TS-TL-FLK-082

Operation is in either *pressure to mass* or *mass to pressure* mode (see Section 3.11.12).

To operate in differential mode, set the PG9000 Differential Mode Controller (see Figure 14) to apply pressure defined by PG9000 to the high side of the DUT (see Table 15).

Table 15. Valve Settings for Operating in Differential Mode

VALVE	VALVE SETTING
Control Selection	To adjust pressure under PG9000 piston-cylinder PG To adjust static pressure: STATIC P
PG Shutoff	Piston is floating or near floating: OPEN Any other time: CLOSED
Test Bypass	To make differential pressure measurements: CLOSED To set or check DUT zero: OPEN
Static P Selection	OFF If static pressure is atmospheric pressure: VENT or OFF

Note

For the highest quality differential mode measurements, use consistent conditions for static pressure and PG9000 vacuum reference pressure at each point. Set the PG9000 Differential Mode Interconnections Kit CONTROL valve to STATIC P to readjust the static pressure to the same value at each point if necessary. This value should be the same as the value at which the RPM offset was determined.

Typical Differential Mode Operational Sequence

See Figure 14 for a schematic of the Differential Mode Controller and its valves.

❶ Set RPM offset at desired static pressure (see Section 3.11.4.1, Selecting Differential Mode, Setting Static Pressure, Finding RPM Offset (**<1run>**)).

❷ Select *pressure to mass* or *mass to pressure* mode (see Section 3.11.12).

❸ Put the Differential Mode Controller PG SHUTOFF valve in CLOSED position.

❹ If desired, read DUT output at zero differential pressure with TEST BYPASS valve open. Put TEST BYPASS valve in CLOSED position. If desired, put CONTROL valve in STATIC P position and use system control component to adjust static pressure to starting value.

❺ Press **[ENTER]** and enter a pressure or mass value. Load mass as instructed on PG9000.

❻ Install bell jar on PG9000, shut the PG9000 vacuum vent valve, open vacuum reference shutoff valve. Wait for vacuum under bell jar to reach *Ready* condition. If using AMH automated mass handler and mass loading resolution of 0.1kg, mass can be changed without breaking vacuum.

❼ Put CONTROL valve in PG position and use system control component to float PG9000 piston. Slowly put PG SHUTOFF valve into OPEN position. Readjust pressure to float the PG9000 piston-cylinder if necessary.

❽ If desired, put CONTROL valve in STATIC P position and use system control component to adjust static pressure to starting value.

❾ When PG9000 indicates *Ready* on all *Ready/Not Ready* indicators, take DUT reading at differential pressure indicated on the top line of the PG9000 display.

❿ Slowly put PG SHUTOFF valve in CLOSED position.

원문: Fluke Calibration PG9602/9607 메뉴얼(영문) · 제조사 원문 자료입니다. 사양은 제조사 사정에 따라 변경될 수 있습니다.

⓫ Shut vacuum reference shutoff valve, open vacuum vent valve. Wait for pressure under bell jar to return to ambient. Remove bell jar. This step is not necessary is using AMH automated mass handler and mass loading resolution of 0.1 kg.

⓬ Repeat Steps ❺ through ⓫ for each desired differential pressure point.

Setting Zero Differential Pressure

See Figure 14 for a schematic of the Differential Mode Controller and its valves.

Zero differential pressure can be set by PG9000 or simply by setting the Differential Mode Controller TEST BYPASS valve to the OPEN position which connects the HIGH and LOW TEST ports together. The TEST BYPASS valve OPEN position is a "true" zero. The zero differential pressure value set by PG9000 has the same uncertainty as any other differential pressure point (see Section 1.2.4). Comparing the DUT reading at zero set by TEST BYPASS in the OPEN position and at zero set by PG9000 in differential mode like any other differential pressure, can help quantify the quality of the current RPM offset value. If the difference between the two zero readings is excessive, the RPM offset value should be redetermined (see Section 3.11.4.1, Selecting Differential Mode, Setting Static Pressure, Finding RPM Offset (**<1run>**)). Also, consider correcting all the DUT readings by the difference in the zero reading found in the two different conditions to correct for the defect in the RPM offset.

Viewing Static Pressure and RPM Offset (<2view>)

To view the current RPM offset and the static pressure value at which the offset was recorded, press **[MODE]** and select **<4dif>**, **<2view>**. This display is:

1. RPM offset value that is currently active.
2. PG9000 pressure at which RPM offset was recorded.

```
Offset:  -6.33 Pa
@99.8755 kPa a
```

Press **[ESCAPE]** to return to the **<Differential mode:>** menu.

Press **[ENTER]** to return to the previous run screen.

3.11.5 [SYSTEM]

❍ **PURPOSE**

To access the two SYSTEM run screens which display current values of PG9000 piston behavior, piston-cylinder temperature and vacuum reference measurements.

❍ **OPERATION**

To access the SYSTEM run screens, press **[SYSTEM]** from any other run screen. There are two or three SYSTEM run screens, depending on the PG9000 model (see Figure 13). Pressing **[SYSTEM]** or **[±]** when in a SYSTEM screen rolls through SYSTEM screens.

See Sections 3.11.5.1through 3.11.5.3 for detailed information on the contents of the SYSTEM run screens.

Note

The SYSTEM screens are *run* screens. This means that other functions can be accessed from the SYSTEM screens and the active SYSTEM screen will be returned to when leaving functions. The MAIN screen and AMBIENT screen are also *run* screens (see Section 3.10).

© 1998-2010 Fluke Calibration

원문: Fluke Calibration PG9602/9607 메뉴얼(영문) · 제조사 원문 자료입니다. 사양은 제조사 사정에 따라 변경될 수 있습니다.

we measure, we calibrate, we validate.
KOLAS 국제공인교정기관 · ISO/IEC 17025
㈜테솔 · www.tessol.com TS-TL-FLK-082 73 / 192
TESSOL Technical Library
TS-TL-FLK-082

3.11.5.1 First System Run Screen

Note

PG9607 is a unique configuration of PG9000 that utilizes a floating cylinder with a stationary piston. This is in contrast with other PG9000 models that use a floating piston and a stationary cylinder. For consistency 'Piston' refers to the floating component on which mass is loaded in this and other noted sections.

❍ OPERATION

The first SYSTEM run screen provides real time display of piston rotation rate, decay in piston rotation rate, piston position and piston fall rate.

To access the first SYSTEM run screen, press **[SYSTEM]** from any other run screen.

The first SYSTEM run screen displays:

1. **<nnn rpm>**: Numerical value of current piston rate of rotation. The unit of measure is rotations per minute **[rpm]** and cannot be changed. Flashes when Not Ready and piston is floating (see Section 3.4.2). Indicates **< ---- >** when information is unavailable or out of range.
2. **<±nn/min>:** Numerical value of current decay in piston rotation rate (deceleration). The unit of measure is rotations per minute [rpm/min] and cannot be changed. **< ---- >** when information is unavailable or out of range.

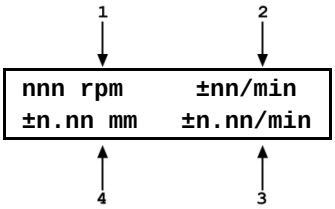

3. **<±n.nn/min>:** Sign and numerical value of current piston vertical rate of displacement. A negative value indicates piston falling. A positive value indicates piston rising. The unit of measure is millimeters per minute [mm/min] and cannot be changed. Indicates **< ---- >** when information is unavailable or out of range.
4. **<±n.nn mm>:** Sign and numerical value of current position of the piston within the piston stroke (see Section 3.5). The unit of measure is millimeters **[mm]** away from mid-stroke position and cannot be changed. Indicates **<HSTOP>** when the piston is at the high stop (all the way up) and **<LSTOP>** when the piston is at the low stop (all the way down). Flashes when Not Ready and piston is floating (see Section 3.4.1). Indicates **< ---- >** when information is unavailable or out of range.

Pressing **[ESCAPE]** in the first SYSTEM run screen returns operation to the MAIN run screen. Pressing **[SYSTEM]** or **[±]** advances to the second run screen. Pressing **[SYSTEM]** or **[±]** again, advances to the third SYSTEM run screen. All function keys are active from the first SYSTEM run screen and operation returns to that screen when leaving functions they were accessed from it.

Note

- **The measurement systems for piston behavior indications rely on movement of the mass loading bell. Piston behavior indications (piston position, piston rotation rate) are not valid when the mass bell is not loaded on the piston.**
- **See Section 3.5 for information on the piston stroke and measurement zone.**

3.11.5.2 Second System Run Screen

❍ OPERATION

The second SYSTEM run screen displays the values of piston-cylinder temperature and temperature rate of change measured by PG9000. PG9000 also displays the value of the optional reference vacuum and vacuum rate of change if present. If an optional external vacuum reference measurement is present (see Sections 3.12 and 3.13.5.5), the second SYSTEM run screen provides a real time display of the values measured.

원문: Fluke Calibration PG9602/9607 메뉴얼(영문) · 제조사 원문 자료입니다. 사양은 제조사 사정에 따라 변경될 수 있습니다.

we measure, we calibrate, we validate.
㈜테솔 · www.tessol.com TS-TL-FLK-082 74 / 192
KOLAS 국제공인교정기관 · ISO/IEC 17025

TESSOL Technical Library
TS-TL-FLK-082

To access the second SYSTEM run screen, press **[SYSTEM]** or **[±]** from the first SYSTEM run screen. To access the first SYSTEM run screen, press **[SYSTEM]** from any other run screen (see Figure 13).

The second SYSTEM run screen displays:

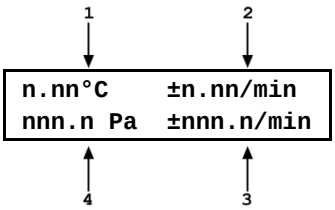

1. **<n.nn°C>:** Current piston-cylinder temperature. Source of value can be internal measurement, normal or user depending on current SETUP selection (see Section 3.12). The unit of measure is degrees Centigrade **[°C]** and cannot be changed. Indicates **< ---- >** when information is unavailable or out of range. PG9607 uses two internal PRTs to measure the piston cylinder temperature when internal temperature source is selected in SETUP (see Section 3.12. The average of these two PRT measurements is shown in this screen. The individual PRT temperature measurements can be viewed in the third SYSTEM screen (see Section 3.11.5.3).
2. **<+n.nn/min>:** Sign and numerical value of current rate of change of temperature. When internal temperature source is selected for PG9000 the rate of change of temperature is based on the average temperature of PG9607's two internal PRTs. A negative value indicates temperature decreasing. A positive value indicates temperature increasing. The unit of measure is degrees Centigrade per minute **[°C/min]** and cannot be changed. Indicates **< ---- >** when information is unavailable or out of range. Indicates **< ---- >** when "user" or "normal" is the current SETUP selection for piston-cylinder temperature source (see Section 3.12).
3. **<+nnn.n/min>:** Sign and numerical value of current rate of change of the optional vacuum reference pressure, if present. A negative value indicates pressure decreasing. A positive value indicates pressure increasing. The unit of measure is Pascal per minute **[Pa/min]** and cannot be changed. Indicates **< ---- >** when information is unavailable or out of range. Indicates < - TO - > if external device is not connected or communicating. Blank when in gauge or absolute by ATM modes.
4. **<nnn.n Pa>:** Current vacuum reference value, if present (blank if not present). Can be normal or other external measurement, normal or user depending on current SETUP selection. Flashes when Not Ready and piston is floating (see Section 3.4.3). The unit of measure is Pascal **[Pa]** and cannot be changed. Indicates **< >13 Pa >** if current SETUP selection is COM2 and current measurement is out of range or greater than 13 Pascal. Indicates <- TO -> if external device is not connected or communicating. Blank when in gauge or absolute by ATM modes.

Pressing **[ESCAPE]** in the second SYSTEM run screen returns operation to the MAIN run screen. Pressing **[SYSTEM]** or **[±]** advances to the third SYSTEM run screen. Pressing **[SYSTEM]** or **[±]** again, advances back to the first SYSTEM run screen. All function keys are active from the second SYSTEM run screen and operation returns to that screen when leaving functions that were accessed from it.

Note

The current selection in SETUP determines the source of the values used by PG9000 for piston-cylinder temperature and vacuum reference values. If the SETUP setting is user or normal, the SYSTEM screen displays the user or normal value, not PG9000's on-board measurement(s).

3.11.5.3 Third System Run Screen

❍ OPERATION

The third SYSTEM run screen is only displayed on the PG9607. The third SYSTEM run screen displays the individual values measured by PG9607's two internal PRTs.

To access the third SYSTEM run screen, press **[SYSTEM]** or **[±]** twice from the first SYSTEM run screen or once from the second SYSTEM run screen. To access the first SYSTEM run screen, press **[SYSTEM]** from any run screen.

© 1998-2010 Fluke Calibration

원문: Fluke Calibration PG9602/9607 메뉴얼(영문) · 제조사 원문 자료입니다. 사양은 제조사 사정에 따라 변경될 수 있습니다.

we measure, we calibrate, we validate.
㈜테솔 · www.tessol.com TS-TL-FLK-082 75 / 192
KOLAS 국제공인교정기관 · ISO/IEC 17025

TESSOL Technical Library
TS-TL-FLK-082

The second SYSTEM run screen displays:

1. **<n.nn°C>:** Current piston-cylinder temperature measured by the first internal PRT when internal is selected as the piston-cylinder temperature source. When user or normal is selected as the source of this temperature measurement, the resulting fixed temperature value is displayed in both positions on this screen. (see Section 3.12). The unit of measure is degrees Centigrade **[°C]** and cannot be changed. Indicates **< ---- >** when information is unavailable or out of range.
2. **<n.nn°C>:** Current piston-cylinder temperature measured by the second internal PRT when internal is selected as the piston-cylinder temperature source. When user or normal is selected as the source of this temperature measurement, the resulting fixed temperature value is displayed in both positions on this screen. (see Section 3.12). The unit of measure is degrees Centigrade **[°C]** and cannot be changed. Indicates **< ---- >** when information is unavailable or out of range.

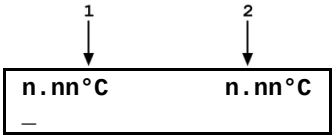

Pressing **[ESCAPE]** in the third SYSTEM run screen returns operation to the MAIN run screen. Pressing **[±]** advances through the first, second and third SYSTEM run screen. All function keys are active from the second SYSTEM run screen and operation returns to that screen when leaving functions that were accessed from it.

Note

The current selection in SETUP determines the source of the values used by PG9000 for piston-cylinder temperature and vacuum reference values. If the SETUP setting is user or normal, the SYSTEM screen displays the user or normal value, not PG9000's on-board measurement(s).

3.11.6 [AMBIENT]

❍ PURPOSE

Access the AMBIENT run screen which displays the current ambient condition values being used by PG9000 for calculations of reference pressures.

❍ PRINCIPLE

PG9000 uses ambient condition values to calculate the reference pressures that it defines (see Section 7.2). The source of the ambient condition values is specified in the current SETUP file (see Section 3.12). The AMBIENT run screen displays the current ambient condition values. If the SETUP selection for the ambient condition is internal measurement, then the AMBIENT run screen provides a real time display of the measurement of PG9000's on-board sensor for that variable.

❍ OPERATION

To access the AMBIENT run screen, press **[AMBIENT]** from any other run screen (MAIN or SYSTEM).

Note

The AMBIENT screen is a *run* screen. This means that other functions can be accessed from the AMBIENT screen and the active AMBIENT screen will be returned to when leaving functions. The MAIN screen and SYSTEM screens are also *run* screens (see Sections 3.9 and 3.11.5).

원문: Fluke Calibration PG9602/9607 메뉴얼(영문) · 제조사 원문 자료입니다. 사양은 제조사 사정에 따라 변경될 수 있습니다.

TESSOL Technical Library

TS-TL-FLK-082

we measure, we calibrate, we validate.
㈜테솔 · www.tessol.com TS-TL-FLK-082 76 / 192
KOLAS 국제공인교정기관 · ISO/IEC 17025

The AMBIENT run screen displays:

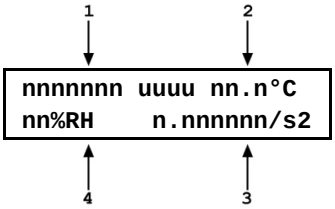

1. **<nnnnnnn uuuu>:** Current numerical value and pressure unit of atmospheric pressure. Source of value can be internal measurement, remote barometer, normal or user depending on current SETUP selection (see Section 3.12). The unit of measure is determined by the UNIT function setting (see Section 3.11.3). ATM head is applied to internal or external barometer reading to correct atmospheric pressure to the PG9000 reference level (see Section 3.13.3). Indicates **< ---- >** when information is unavailable or out of range. Indicates **<TIMEOUT>** if the current SETUP selection is a remote barometer and PG9607 communication with the barometer times out.
2. **<n.nn°C>:** Current ambient temperature. Source of value can be internal measurement, normal or user depending on current SETUP selection (see Section 3.10). The unit of measure is degrees Centigrade **[ºC]** and cannot be changed. Indicates **< ---- >** when information is unavailable or out of range.
3. **<n.nnnnnnm/s2>:** Value of local acceleration due to gravity. Can be normal or user depending on current SETUP selection (see Section 3.10). The unit of measure is meters per second squared (m/s2) and cannot be changed.
4. **<nn%RH>:** Current ambient relative humidity. Can be internal measurement, normal or user depending on current SETUP selection (see Section 3.12). The unit of measure is percent relative humidity (%RH) and cannot be changed. Indicates **< -- >** if current SETUP selection is internal and current measurement is unavailable or out of range.

Pressing **[ESCAPE]** in the AMBIENT run screen returns operation to the MAIN run screen. All function keys are active from the AMBIENT run screen and operation returns to that screen when leaving functions that were accessed from it.

Note

- **The current selection in SETUP determines the source of the values used by PG9000 for atmospheric pressure, ambient temperature and relative humidity. If the SETUP setting for these values is user or normal, the AMBIENT screen displays the user or normal value, not PG9000's on-board measurement(s).**
- **To change the ambient pressure units of measure, see Section 3.11.3. When the current pressure unit of measure is an altitude unit, atmospheric pressure in the AMBIENT run screen is expressed in kPa if the altitude unit is meters (m) or psi if the altitude unit is feet (ft).**

3.11.7 [HEAD]

❍ PURPOSE

To cause a pressure value, representing the fluid head resulting from a difference in height, to be added to the pressure defined by PG9000 at its reference level. To set the height of the DUT head.

❍ PRINCIPLE

Calculation of the fluid head requires determination of the difference in height between the PG9000 reference level and the level of the DUT. The PG9000 reference level takes into consideration the piston-cylinder natural reference level, geometry and position.

The natural reference level of a piston-cylinder is defined as the height at which changes in fluid density have no effect on the defined pressure. For a solid floating piston the natural reference level is located at the bottom of the piston. For hollow pistons the geometry is irregular and the natural reference level is located above the bottom of the piston. For a floating cylinder (PG9607) the geometry is irregular and the natural reference level is near the bottom surface of the cylinder cap. In order to create a convenient, single location for reference level determination the PG9000 defines the reference level as the location of solid pistons at mid stroke. The calculated ***reference level offset*** of hollow pistons and floating cylinders normalizes the different natural reference levels to the same height for convenience – the position of a solid piston at mid stroke or reference level (see Figure 15). In this way the DUT height does not need to be determined for each piston-cylinder that is used.

© 1998-2010 Fluke Calibration

원문: Fluke Calibration PG9602/9607 메뉴얼(영문) · 제조사 원문 자료입니다. 사양은 제조사 사정에 따라 변경될 수 있습니다.

TESSOL Technical Library
TS-TL-FLK-082
we measure, we calibrate, we validate.
㈜테솔 · www.tessol.com TS-TL-FLK-082 77 / 192
KOLAS 국제공인교정기관 · ISO/IEC 17025

Note

- **See Section 7.2.2 for information on calculation of the three fluid head correction functions.**
- **It is important to include the DUT head, reference level offset and piston position if performing pressure calculations independently of the PG9000 platform (see Section 7.2.2 for PG9000 fluid head calculations).**
- **Piston position relative to the mid stroke position is automatically corrected in the piston head calculation which can be turned ON or OFF (see Section 3.13.3.4).**

The pressure defined by a PG9000 floating piston is the pressure at the PG9000 ***reference level***. The reference level is shown in Figure 15 for PG9000 platforms. Frequently, when performing a calibration or test, the device or system under test is at a different height than the PG9000 reference level. This difference in height (referred to as **DUT head**) can cause a significant difference between the pressure defined by the PG9000 at its reference level and the pressure actually applied to the device under test located at a different height. In this case, it is useful to make a head correction to the pressure defined by the PG9000 at its reference level in order to accurately predict the pressure actually applied at a different height. The HEAD function allows this head correction to be applied automatically for a variety of fluids based on operator entry of the height difference. The fluid used and the HEAD function units of measure are set by pressing **[SPECIAL]** and selecting **<3head>** (see Section 3.13.3).

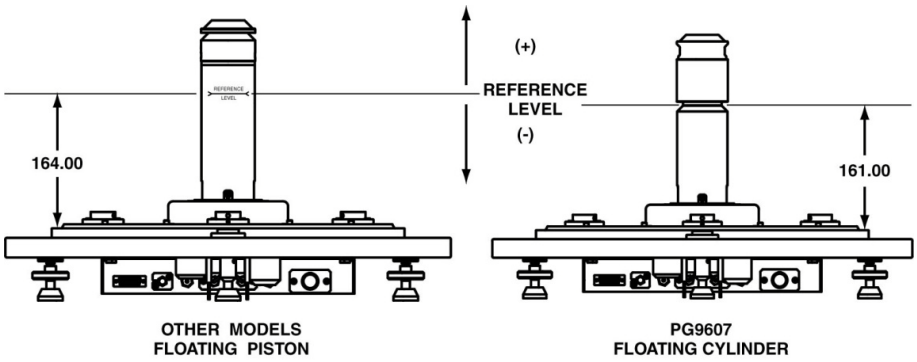

Figure 15. PG9000 Platform Reference Level Location

PG9000 can accurately determine **head** pressures for gases (nitrogen, helium and air) and liquids (Di-2 ethylhexyl Sebacate oil, water and a user defined liquid) as the pressurized medium.

❍ OPERATION

To access the HEAD function, press **[HEAD]**. The display is:

```
Edit DUT head height
95 cm          N2
```

2 1

1. Test fluid currently specified for the head correction.
2. Entry field for head height (-999 to 999 cm or in.).

Entering a value of zero turns the HEAD function OFF. Entering a value other than zero turns the HEAD function ON using the height entered. Pressing **[ESCAPE]** returns to the main run screen with NO change to the current head setting.

원문: Fluke Calibration PG9602/9607 메뉴얼(영문) · 제조사 원문 자료입니다. 사양은 제조사 사정에 따라 변경될 수 있습니다.

Note

- **The DUT head height should be entered as a positive value if the device or system under test is higher than the PG9000 reference level and negative if it is lower (see Figure 15).**
- **The reference level is indicated by the piston mounting surface (for PG9607), the marking on mounting post (other PG9000 models) or may be taken as a distance from the platform baseplate (see Figure 15).**
- **To change units of DUT head height between inches and centimeters and to change the test fluid, press [SPECIAL] and select <3Head> (see Section 3.13.3).**
- **When the HEAD function is ON (DUT head value different from 0), the application of a head correction is indicated by <h> in the right side of the top line of the MAIN run screen (see Section 3.9). When the HEAD function is OFF, the <h> is NOT shown. PG9000's also have a separate head correction to compensate for the deviation between the current piston position and mid-stroke (see Section 3.13.3.4). This PISTON head can be turned ON and OFF (see Section 3.11.3.4).**

3.11.8 [ROTATE]

Note

PG9607 is a unique configuration of PG9000 that utilizes a floating cylinder with a stationary piston. This is in contrast with other PG9000 models that use a floating piston and a stationary cylinder. For consistency 'Piston' refers to the floating component on which mass is loaded in this and other noted sections.

❍ PURPOSE

To turn **automatic** control of motorized piston rotation (acceleration and brake) ON and OFF.

Note

See Section 3.11.13 for information on manual control of motorized piston rotation.

❍ PRINCIPLE

The motorized piston rotation system is used to start or increase piston rotation rate when the piston is floating. It is also used to stop piston rotation when necessary, for example before manipulating mass to set a new pressure. The system operates by engaging a motor driven belt around the bottom of the mass loading bell to accelerate or brake the rotation rate of the mass bell and piston it is loaded on. The motorized rotation system can engage with the piston at any position in its stroke and at any rotation speed with minimal impact on piston position and the defined pressure. When the motorized rotation system disengages, the piston is completely free.

With automatic motorized rotation ON, the motorized rotation system engages and disengages automatically as needed when the piston is floating to maintain the piston rotation rate above the minimum rate *Ready* limit (see Section 3.4.2). The rotation rate is measured by PG9000 on board sensors and the rotation rate limits are set in the file of the active piston cylinder (see Section 3.13.1.1). Whenever the piston is floating, the motorized rotation system will attempt to maintain the piston rotation rate within the *Ready* limits (except under the cutoff mass load of 3 kg, at which the low limit is reduced to minimum to maximize free rotation time. The piston rotation *Ready/Not Ready* indication character indicates *Not Ready* to alert the operator when the motorized rotation system is about to engage. The rotation system will not engage when the current mass load is less than the mass of the piston + mass loading bell.

The motorized rotation system is also used to brake and stop rotation when starting a new pressure point. If the piston is floating and rotating when **[ENTER/SET P]** is pressed, the

© 1998-2010 Fluke Calibration

원문: Fluke Calibration PG9602/9607 메뉴얼(영문) · 제조사 원문 자료입니다. 사양은 제조사 사정에 따라 변경될 수 있습니다.

we measure, we calibrate, we validate.
㈜테솔 · www.tessol.com TS-TL-FLK-082 79 / 192
KOLAS 국제공인교정기관 · ISO/IEC 17025

TESSOL Technical Library
TS-TL-FLK-082

motorized rotation system engages at a speed near the rotation rate of the piston and then brakes it to a stop. Piston rotation is stopped to avoid loading and unloading masses on the rotating piston and to avoid stopping rotation by friction between the piston and the piston end of stroke stops.

With automatic motorized rotation OFF, the motorized rotation system engages only when actuated by the operator. Pressing **[↻]** accelerates rotation or **[↻]** followed by **[←]** stops rotation (see Section 3.11.13).

Automatic motorized rotation is generally left ON for normal operation. It is turned OFF in situations where rotation system actuation independent of operator initiative is undesired (e.g. when performing a crossfloat intercomparison with another piston gauge).

❍ **OPERATION**

To access the AutoRotate functions, press **[ROTATE]**. The display is:

```
AutoRotate OFF
1on 2pre-decel
```

<AutoRotate ON> or **<AutoRotate OFF>** indicates the current state of AutoRotate. Use **<1on>** or **<1off>** to change the state.

When automated rotation is OFF, the PG9000 motorized rotation system will only engage if the operator presses **[↻]** or **[↻]** followed by **[←]** (see Section 3.11.13).

When automated rotation is ON, the automated rotation system engages automatically. When the piston is floating, it engages as needed to maintain the piston rotation rate above the *Ready* limit (see Section 3.4.2). When **[ENTER/SET P]** is pressed, it engages to stop rotation before masses are loaded and/or the pressure is adjusted (this function can be turned ON and OFF, see Section 3.11.8.1). Manual control using **[↻]** and **[↻]** followed by **[←]** is also still active.

Note

- **Automatic motorized piston rotation is dependent on PG9000's measurements of piston position and rotation rate. These measurements are only available when the mass loading bell is installed on the piston. Automatic piston rotation is suspended when the current PG9000 mass load does not include the mass loading bell.**
- **Proper operation of the rotation system is dependent on PG9000's measurements of piston position. When using AutoGen, be sure that the piston position indication system is properly adjusted (see Section 5.2.2).**
- **When PG9000 is operating in absolute by vacuum mode using the internal vacuum sensor to measure reference vacuum, automatic motorized piston rotation will not engage until the reference vacuum value is within the *Ready* limit (see Section 3.4.3).**

3.11.8.1 <2Pre-Decel>

❍ **PURPOSE**

To turn ON and OFF a function that causes the automated rotation system to begin the piston rotation deceleration when **[ENTER/SET P]** is pressed rather than at the time mass is to be loaded.

On a PG9000 Platform equipped with motorized rotation, when AutoRotate is on, the piston rotation deceleration function is used to stop rotation before masses are loaded or pressure is adjusted. As the deceleration function can take up to one minute to execute, it can be initiated the moment that **[ENTER/SET P]** is pressed to enter a new pressure or mass target. The deceleration function then runs while the new target value is being entered. However, when the next target does not require changing main masses, it may not be necessary to stop piston rotation. In these cases, the running the deceleration function is probably not desired and it is not beneficial for piston deceleration to initiate it when

원문: Fluke Calibration PG9602/9607 메뉴얼(영문) · 제조사 원문 자료입니다. 사양은 제조사 사정에 따라 변경될 수 있습니다.

TESSOL Technical Library TS-TL-FLK-082

we measure, we calibrate, we validate. ㈜테솔 · www.tessol.com TS-TL-FLK-082 80 / 192

KOLAS 국제공인교정기관 · ISO/IEC 17025

[ENTER/SET P] is pressed. For this reason, the function to start piston deceleration when **[ENTER/SET P]** is pressed can be turned ON and OFF.

If pre-deceleration is ON and AutoRotate is ON, piston rotation deceleration always initiates immediately when **[ENTER/SET P]** is pressed.

If pre-deceleration is OFF and AutoRotate is ON, piston rotation deceleration occurs after entry of the pressure or mass target value and only if the new target requires changing main masses with a manual mass set or operation AMH if an automated mass handling system is active.

❍ OPERATION

To turn ON and OFF the function that causes stopping piston rotation to initiate when **[ENTER/SET P]** is pressed, press **[ROTATE]**, **<2pre-decel>**. The cursor is on the choice corresponding to the current state. Select **<2on>** for piston rotation deceleration to initiate when **[ENTER/SET P]** is pressed. Select **<1off>** for deceleration to initiate only after entry of a new pressure or mass target and only if main masses need to be moved or AMH automated mass handling needs to be operated. The default is **<2on>**.

3.11.9 [GEN] (Optional)

❍ PURPOSE

To turn ON and OFF automated pressure generation/control and view and edit automated pressure control settings. Requires that an automated pressure generation/control component be included in the PG9000 system and properly configured (see Section 2.4.11).

❍ PRINCIPLE

PG9000s support automated pressure generation/control components. These components, when properly configured and interfaced with the PG9000 platform, are controlled by the PG9000 platform to automatically set and adjust pressure to float the piston. Automated pressure generation and control components are interfaced via the PG9000 platform's COM3 RS232 port (see Section 3.13.5.1).

Once an automated pressure generation/control component has been properly configured and interfaced with the PG9000 platform, the functions under **[GEN]** are used to turn automated pressure generation/control ON and OFF and to set operating parameters associated with automated pressure control.

With automated pressure generation/control ON, PG9000 uses the automated control component to float and refloat its piston when a pressure or mass value is entered. **[ENTER/SET P]** is pressed to initiate a new command. The automated control function is suspended when any function key is pressed, when entering remote mode or if automated pressure control is turned OFF.

After a target pressure or mass has been entered (locally or remotely) and the required mass has been loaded, the GEN function controls the pressure control component as needed to float the PG9000 piston at the piston float target (see Section 3.11.9.1) and refloat it if necessary. If the piston moves beyond the high or low piston position *Ready* limit the GEN function refloats it to the piston float target. The piston float target and piston position ready limits are user adjustable (see Section 3.12.2 and 3.12.3 <6READY>). See Section 3.5, Figure 9 for a description piston position stroke zones and limits.

With automated pressure generation/control OFF, PG9000 leaves the automated pressure generation/control component idle and does not attempt to use it.

If an automated pressure control component is included in the PG9000 system, automated pressure generation/control is generally left ON for normal operation. It is turned OFF in situations where pressure control independent of operator initiative is undesired (e.g. when performing a crossfloat intercomparison with another piston gauge).

The **[GEN]** menu includes:

1. Turning the GEN function ON and OFF.
2. The adjustable piston float target that defines the position to which the piston is set when floated (see Section 3.11.9.1).

© 1998-2010 Fluke Calibration

원문: Fluke Calibration PG9602/9607 메뉴얼(영문) · 제조사 원문 자료입니다. 사양은 제조사 사정에 따라 변경될 수 있습니다.

we measure, we calibrate, we validate.
㈜테솔 · www.tessol.com TS-TL-FLK-082 81 / 192
KOLAS 국제공인교정기관 · ISO/IEC 17025

TESSOL Technical Library
TS-TL-FLK-082

3. A choice to have the piston raised to the top of the stroke before manipulating mass using an AMH automated mass handler (see Section 3.11.9.2).
4. Viewing and setting the UPPER LIMIT of the automated pressure generation component to avoid accidental overpressure (see Section 3.11.9.3).
5. Viewing and setting the assumed pressure controller tolerance used to determine pressure setting limits when floating the PG9000 piston (see Section 3.11.9.4).
6. A choice to not readjust piston position if the piston is already floating within the *Ready* position limit after a new target is executed (see Section 3.11.9.5).

❍ **OPERATION**

To access the GEN functions, press **[GEN]**. The display is:

```
AutoGen OFF    1on
2target 3raise 4UL ↓
5tol 6refloat
```

<AutoGen ON> or **<AutoGen OFF>** indicates the current state of AutoGen. Use **<1on>** or **<1off>** to change the state.

If automated pressure control is OFF, PG9000 attempts to turn automated pressure control ON when **<1on>** is pressed. To do so, communication must be established with a valid automated pressure control component over its COM3 RS232 port (see Section 3.13.5.1). If PG9000 **is not able** to establish communication with a valid pressure control component, **<P control timeout, autogen off>** is displayed momentarily. Correct the communications error with the pressure control component and try again. If PG9000 **is able** to establish communications with a valid automated pressure control component, **<Turning ON automated generation>** is displayed momentarily and automated control is turned ON.

The PG9000 automated control function will attempt to float the piston within the piston position ready limits (see Section 3.4.1) after any *mass to pressure* or *pressure to mass* command once mass loading has been confirmed. It will continue to attempt to float its piston until **[ENTER]** is pressed to initiate a new command, a function key is pushed to interrupt AugoGen, or automated pressure control is turned OFF using **[GEN]**.

If automated pressure control is ON and **<1off>** is pressed, **<Turning OFF automated generation>** is displayed momentarily and automated control is turned OFF. The PG9000 automated control function is inactive.

Note

- **Automated pressure generation/control ON is indicated by a <G> in the right of the top line of the PG Terminal main run screen. The <G> flashes when automated generation is active (see Section 3.9).**
- **Proper operation of the automated pressure generation/control function is dependent on PG9000's measurements of piston position. When using AutoGen, be sure that the piston position indication system is properly adjusted (see Section 5.2.2).**
- **Proper operation of the automated pressure generation/control function is dependent on PG9000's measurements of piston position and rotation rate. These measurements are only available when the mass loading bell is installed on the piston. Automated pressure generation/control is automatically turned off when the PG9000 entered pressure or mass load does not include the mass loading bell.**

⚠ Caution

To help protect against accidental overpressure, when using automated pressure generation/control, set the upper limit (UL) of the pressure control system using [GEN], <4UL> (see Section 3.11.9.3).

원문: Fluke Calibration PG9602/9607 메뉴얼(영문) · 제조사 원문 자료입니다. 사양은 제조사 사정에 따라 변경될 수 있습니다.

TS-TL-FLK-082

we measure, we calibrate, we validate. ㈜테솔 · www.tessol.com TS-TL-FLK-082 82 / 192

KOLAS 국제공인교정기관 · ISO/IEC 17025

3.11.9.1 <2target>

❍ **PURPOSE**

To adjust the distance from midstroke to which the piston position must be set before the automated generation system considers the piston floating process complete (see Sections 3.11.9, 3.5).

❍ **OPERATION**

To adjust the AutoGen piston float target press **[GEN]**, **<2target>**. Edit the value of the target as desired. The default is + 1 mm. The entry should not exceed + 2.5 mm.

3.11.9.2 <3raise>

❍ **PURPOSE**

To turn ON and OFF a function that causes the automated generation component (see Section 3.11.9.) to raise the PG9000 piston to the top of its stroke before automated mass manipulation by an AMH automated mass handler. This can avoid a large pressure change which may occur in certain circumstances when AMH lifts the mass load off of the piston.

❍ **OPERATION**

To turn ON and OFF the raise piston before mass loading function, press **[GEN]**, **<3raise>**. The cursor is on the choice corresponding to the current state. Select **<1no>** for the piston not to be raised or **<2yes>** to raise the piston. The default is **<1no>**.

3.11.9.3 <4UL>

❍ **PURPOSE**

To read and/or set the UPPER LIMIT (UL) of the automated pressure generation component used by AutoGen. This function is used to protect against accidental overpressure when using the PG9000 automated pressure generation function (see Section 3.11.9 and the generation component's Operation and Maintenance Manual, UL section)

❍ **OPERATION**

To view or set the UPPER LIMIT of the automated pressure control component used by AutoGen, press **[GEN]**, **<4UL>**.

If AutoGen is not currently ON, the control component UPPER LIMIT cannot be accessed and an error message is displayed.

If AutoGen is ON, the current UPPER LIMIT of the automated control component is displayed and can be edited.

The automated pressure control component will abort pressure generation and beep repeatedly if its UPPER LIMIT is exceeded.

3.11.9.4 <5tol>

❍ **PURPOSE**

To read and/or set the pressure measuring tolerance of the pressure controller used by AutoGen to automate pressure control.

Note

This function is used when the pressure controller is a PPC3 or PPC4.

❍ **PRINCIPLE**

The control tolerance function can be used to reduce the time required to set pressure and float the PG9000 piston when the pressure controller used is significantly more accurate than the default tolerance value. The tolerance can also be described as the degree of agreement between the pressure control's pressure measurement and the

© 1998-2010 Fluke Calibration

원문: Fluke Calibration PG9602/9607 메뉴얼(영문) · 제조사 원문 자료입니다. 사양은 제조사 사정에 따라 변경될 수 있습니다.

TS-TL-FLK-082

we measure, we calibrate, we validate.
㈜테솔 · www.tessol.com TS-TL-FLK-082 83 / 192
KOLAS 국제공인교정기관 · ISO/IEC 17025

pressure value set by the PG9000 when its piston is floating. In general, making the tolerance smaller reduces the time required to float the piston and making the tolerance wider increases the time. However, if the tolerance is set too small so that it does not correctly reflect the degree of agreement between the pressure controller pressure measurement and the PG9000's floating piston, overshoot of the piston float point or inability to float the piston will result.

The pressure controller tolerance determines, when applicable:

a) the distance from the actual pressure target that pressure is set before the AutoGen function begins to seek movement of the piston.

b) the amount of pressure overshoot that must occur before "forced rotation" is used to overcome possible friction between the piston and the cylinder.

Note

This function is used when the pressure controller is a PPC3 or PPC4.

❍ OPERATION

To view or set the pressure control tolerance, press **[GEN]**, **<5tol>**.

The current value of the pressure control tolerance is displayed. The value is in % of full scale of the pressure controller. If the pressure controller is AutoRanged, the AutoRange maximum pressure is used as full scale (see the pressure controller's Operation and Maintenance Manual).

The default tolerance value is 0.05% of full scale.

Edit the tolerance value if desired. Do not make the pressure tolerance less than the worst case agreement between the pressure controller pressure measurement and the pressure indicated by the PG9000 when its piston is floating.

3.11.9.5 <6refloat>

❍ PURPOSE

To turn ON and OFF a function that causes the automated generation component (see Section 3.11.9) to refloat the piston to the target piston position after a new pressure or mass target is entered, even if the piston is already floating within the piston position *Ready* limits. When Refloat is ON, the piston is always refloated to the target piston position after a new pressure or mass target command. This gives the full stroke of the piston to drop before refloat is necessary. When Refloat is OFF, the time required to activate the pressure control component and refloat the piston is eliminated if it is not needed. This can result in very rapid pressure setting when the piston is still floating after a mass load change.

❍ OPERATION

To turn ON and OFF the Refloat function, press **[GEN]**, **<6refloat>**. The cursor is on the choice corresponding to the current state. Select **<1no>** for the piston NOT to be controlled to the target position after a pressure or mass command if the piston is already in the *Ready* piston position limits. Select **<2yes>** for the piston to always to be controlled to the raise the piston. The default is **<2yes>**.

3.11.10 [RES]

❍ PURPOSE

To set the resolution with which PG9000 loads mass in response to pressure or mass commands (see Section 3.11.12).

원문: Fluke Calibration PG9602/9607 메뉴얼(영문) · 제조사 원문 자료입니다. 사양은 제조사 사정에 따라 변경될 수 있습니다.

TS-TL-FLK-082

we measure, we calibrate, we validate. ㈜테솔 · www.tessol.com TS-TL-FLK-082 84 / 192

KOLAS 국제공인교정기관 · ISO/IEC 17025

❍ PRINCIPLE

PG9000 piston-cylinders are sized such that there is a whole number, nominal relationship between mass loaded on the piston in kilograms [kg] and the pressure at which the piston will float in kilo Pascal [kPa] or Mega Pascal [MPa]. This relationship is called the *pressure to mass conversion coefficient* and is expressed as kPa/kg or MPa/kg. The *pressure to mass conversion coefficient* is marked on the cap of each piston.

PG9000 mass sets are made up of masses in multiples and submultiples of the kilogram making it simple to load mass values rounded to 0.01 g, 1 g, 10 g or 0.1 kg.

When using PG9000 to define pressure, the desired pressure value is entered (see Section 3.9.11) and PG9000 prompts the user with the mass value to be loaded. Due to the many variables that influence the exact pressure to mass relationship for a piston-cylinder (even though there is nominally a whole number mass to pressure relationship) the mass value to load to reach exactly the pressure requested is always an odd value. Therefore, defining the exact pressure value requested always requires loading mass with 0.01 g resolution.

When it is acceptable for the pressure values defined to not be exactly the nominal pressure value of the point, operation can be simplified and mass loading errors can be reduced by loading mass with a lower level of resolution and using the pressure that the lower level resolution mass load generates. For example, on a piston-cylinder with a nominal pressure to mass relationship of 10 kPa/kg, defining a pressure of exactly 100 kPa, nominally requires loading 10 kg of mass. However, once all the influences on the measurement are taken into consideration, the actual mass to load to define exactly 100 kPa will not be 10.00000 kg, it will be a value near 10 kg such as 9.99731 kg. This value is difficult to load, as it requires relatively complex mass accounting and the manipulation of very small sub-gram masses. To avoid handling a difficult, odd mass value, one might instead decide to load 10 kg and use whatever pressure results as the reference pressure. In this example, loading 10 kg rather than 9.99731 kg would result in defining 100.0269 kPa rather than 100.0000 kPa. The pressure defined is only very slightly different from the nominal value and there is no additional uncertainty if that value is used. The savings in time and reduction of possible mass loading errors are significant.

The PG9000 RES function is used to cause PG9000 to automatically calculate mass loads to a whole number value starting at 0.01 g and increasing in powers of 10 to 0.1 kg. This function is very useful to make operation more convenient and less error prone when it is not imperative that the pressure defined by PG9000 be exactly the nominal pressure of the test or calibration sequence.

Note

The mass loading resolution of AMH automated mass handling systems is 0.1 kg. The default mass loading resolution when AMH is initialized is 0.1 kg. If resolution finer than 0.1 kg is set when AMH is active, the AMH loads the required mass value wit 0.1 kg resolution and the operator is prompted with an instruction to load the trim mass under 0.1 kg. For fully automated operation, the mass loading resolution should always be set to 0.1 kg.

❍ OPERATION

To access the resolution function, press **[RES].** The display is:

```
Mass loading rsltn:
0.01 g      < and >
```

Press the **[←]** and **[→]** keys to select the desired level of resolution. **[←]** decreases resolution and **[→]** increases resolution. Press **[ENTER]** to set the selected resolution and return to the main run screen. The resolution range is from 0.01 g to 0.1 kg in powers of 10.

Note

The RES setting has no affect in *mass to pressure* mode. The RES setting only affects the resolution of the mass commands that result from pressure entries in *pressure to mass* mode (see Section 3.11.12).

© 1998-2010 Fluke Calibration

원문: Fluke Calibration PG9602/9607 메뉴얼(영문) · 제조사 원문 자료입니다. 사양은 제조사 사정에 따라 변경될 수 있습니다.

TS-TL-FLK-082

we measure, we calibrate, we validate.
㈜테솔 · www.tessol.com TS-TL-FLK-082 85 / 192
KOLAS 국제공인교정기관 · ISO/IEC 17025

3.11.11 [ENTER/SET P] From Run Screen

❍ **PURPOSE**

To enter and execute *pressure to mass* or *mass to pressure* commands (see Section 3.11.12).

❍ **PRINCIPLE**

PG9000 can calculate and display the mass to be loaded to achieve an entered pressure value (*pressure to mass* mode), or the pressure resulting from an entered mass load (*mass to pressure* mode). The P OR M function is used to set *pressure to mass* or *mass to pressure* mode (see Section 3.11.12).

Pressing **[ENTER/SET P]** from any run screen (MAIN, SYSTEM or AMBIENT) accesses the pressure or mass entry screen which allows the command value to be entered and proceeds through the sequence to set or read the pressure defined by PG9000.

❍ **OPERATION**

To access the pressure or mass entry screen, press **[ENTER/SET P]** from any run screen. The sequence after **[ENTER/SET P]** has been pressed varies between *mass to pressure* and *pressure to mass* mode. The mode is selected by pressing **[P OR M]** (see Section 3.11.12). See Section 3.11.11.1 for details on **[ENTER/SET P]** in *pressure to mass* mode and Section 3.11.11.2for *mass to pressure* mode. See immediately below for typical operational sequences in gauge and absolute modes. See Section 3.11.4.1, Operating in Differential Mode, for typical differential mode operational sequence.

Typical Gauge and Absolute by ATM Mode Operational Sequence

❶ Press **[MODE]** and select gauge or absolute by ATM mode as desired (see Section 3.11.4).

❷ Press **[P OR M]** and select *pressure to mass* or *mass to pressure* mode (see Section 3.11.12).

❸ Press **[ENTER/SET P]** and enter a pressure or mass value. If the piston is floating and AutoRoate is ON, the braking function engages to stop piston rotation (see Section 3.11.8.1).

❹ Load mass as instructed (see Section 3.6). If an AMH automated mass handling system is active, the mass is loaded automatically with resolution of 0.1 kg.

❺ Use the system pressure control component to float the PG9000 piston. If the AutoGen function is ON, the automated pressure control component floats the piston automatically (see Section 3.11.9).

❻ When PG9000 indicates *Ready* on all *Ready/Not Ready* indicators (see Section 3.4), take a DUT reading at the pressure indicated on the top line of PG9000 display.

❼ Repeat Steps ❸ through ❻ for each desired pressure value.

Typical Absolute by Vacuum Mode Operational Sequence

❶ Press **[MODE]** and absolute by vacuum (avac) mode (see Section 3.11.4).

❷ Press **[P OR M]** and select *pressure to mass* or *mass to pressure* mode (see Section 3.11.12).

❸ Press **[ENTER/SET P]** and enter a pressure or mass value. If AutoRoate is ON, the braking function engages to stop piston rotation (see Section 3.11.8.1).

❹ Load mass as instructed (see Section 3.6). If an AMH automated mass handling system is active, the mass is loaded automatically to resolution of 0.1 kg.

❺ Install bell jar on PG9000, shut PG9000 vacuum vent valve, open vacuum reference shutoff valve. Wait for vacuum under bell jar to reach *Ready* condition (see Section 3.4.3).

❻ Use system pressure control component to float the PG9000 piston. If the AutoGen function is ON, the automated pressure control component floats the piston automatically (see Section 3.11.9).

❼ When PG9000 indicates *Ready* on all *Ready/Not Ready* indicators (see Section 3.4), take a DUT reading at absolute pressure indicated on the top line of the PG9000 display.

원문: Fluke Calibration PG9602/9607 메뉴얼(영문) · 제조사 원문 자료입니다. 사양은 제조사 사정에 따라 변경될 수 있습니다.

❽ Shut vacuum reference shutoff valve, open vacuum vent valve. Wait for pressure under bell jar to return to ambient. Remove bell jar. If an AMH automated mass handling system is active and mass loading resolution is 0.1 kg, the vacuum does not need to be broken and reestablished at each increment since the masses are moved automatically.

❾ Repeat Steps ❸ through ❽ for each desired pressure point.

3.11.11.1 [ENTER/SET P] In Pressure To Mass Mode

❍ **PURPOSE**

To enter and execute a *pressure to mass* command in *pressure to mass* mode (see Section 3.11.12).

❍ **OPERATION**

Put the PG9000 in *pressure to mass* operation mode (see Section 3.11.12), then press **[ENTER/SET P]** in any run screen. If automated rotation is on, the **<DECELERATING>** screen shows until piston deceleration is complete.

Note

Pressing [ENTER] in the run screen causes automated pressure generation to be suspended if ON (see Section 3.11.9) and AutoRotate to stop piston rotation if ON (see Section 3.11.8). When [ENTER] is pressed to confirm mass entry, automated pressure generation and/or motorized rotation resume.

The display is:

1. Current measurement mode (see Section 3.11.4).
2. Current pressure unit of measure (see Section 3.11.3).
3. Entry field for the target value of pressure to be set.

```
Target pressure:
100.0000 kPa a
```

3 2 1

Use the numerical keys and editing keys to enter the target pressure value desired.

Press **[ENTER/SET P]** to process the target pressure value. If the pressure value entered cannot be executed, an explanatory error message is displayed momentarily and operation returns to the target pressure entry screen with the previous target pressure value displayed. If the target pressure value entered is valid, the value is processed and operation proceeds to the mass loading instruction screen. The display is:

1. Mass to load using trim masses.
2. Nominal mass to load using main and fractional masses.

```
Load nominal mass:
10.0 kg and 3.17 g
```

2 1

Note

If an AMH automated mass handling system is active and mass loading resolution is set to 0.1 kg, the AMH loads the mass automatically. As it does, the steps of its operation are displayed. If resolution is set to higher than 0.1 kg, the operator is prompted to load the trim mass value.

With PG9000 in absolute by vacuum measurement mode (see Section 3.11.4), the instruction is **<Load mass & vac:>** indicating that the nominal mass value should be loaded and then the bell jar should be installed and vacuum established under the bell jar.

Load the nominal mass value following the protocol described in Section 3.6 and press **[ENTER/SET P]**. When **[ENTER/SET P]** is pressed confirming that the

© 1998-2010 Fluke Calibration

원문: Fluke Calibration PG9602/9607 메뉴얼(영문) · 제조사 원문 자료입니다. 사양은 제조사 사정에 따라 변경될 수 있습니다.

we measure, we calibrate, we validate.
㈜테솔 · www.tessol.com TS-TL-FLK-082 87 / 192
KOLAS 국제공인교정기관 · ISO/IEC 17025

TESSOL Technical Library
TS-TL-FLK-082

nominal mass value has been loaded, operation returns to the previous run screen with the new pressure target and mass value active.

⚠ Caution

To make "in tolerance" measurements, it is imperative that all mass loading instructions be executed following the protocol describe in Section 3.6. This ensures that the actual mass value resulting from a nominal mass loading command will be correct. Failure to load masses following the PG9000 mass loading protocol is likely to result in out of tolerance mass load determinations and pressure definitions.

Note

- **The resolution with which the *pressure to mass* mode mass loading instruction is given depends on the resolution set in the RES function. The RES function makes it possible to avoid loading high resolution mass values when it is not imperative that the pressure defined be exactly the nominal pressure requested (see Section 3.11.10).**
- **The *pressure to mass* loading instruction is given in nominal mass while the main run screen displays the true mass loaded. For this reason, the nominal mass loading instruction and the true mass displayed in the main run screen are slightly different values. This is normal operation (see Section 3.6).**

3.11.11.2 [ENTER/SET P] In Mass To Pressure Mode

❍ PURPOSE

To enter and execute a *mass to pressure* command in *mass to pressure* mode (see Section 3.11.12).

❍ OPERATION

Put the PG9000 in *mass to pressure* operation mode (see Section 3.11.12), then press **[ENTER/SET P]** in any run screen. If automated rotation is on, the **<DECELERATING>** screen shows until piston deceleration is complete.

Note

Pressing [ENTER] in the run screen causes automated pressure generation to be suspended if ON (see Section 3.9.9) and AutoRotate to stop piston rotation if ON (see Section 3.9.8). When [ENTER] is pressed to confirm mass entry, automated pressure generation and/or motorized rotation resume.

The display is:

1. Edit field for total trim mass currently loaded.
2. Edit field for nominal mass of main and fractional masses currently loaded.

```
Load nominal mass:
10.0 kg and 3.17 g
```

2 1

Use the numerical and editing keys to enter the nominal mass to be loaded on the piston following the mass loading protocol described in Section 3.6. Press **[ENTER/SET P]** to process the mass value. If the mass value entered cannot be executed, an explanatory error message is displayed momentarily and operation returns to the mass entry screen with the previous nominal mass value displayed. If the mass value entered is valid, the value is processed and operation proceeds to the previous run screen with the new mass value active.

원문: Fluke Calibration PG9602/9607 메뉴얼(영문) · 제조사 원문 자료입니다. 사양은 제조사 사정에 따라 변경될 수 있습니다.

we measure, we calibrate, we validate.
㈜테솔 · www.tessol.com TS-TL-FLK-082 88 / 192
KOLAS 국제공인교정기관 · ISO/IEC 17025

TESSOL Technical Library
TS-TL-FLK-082

⚠ Caution

To make "in tolerance" measurements, it is imperative that the value of mass loaded on the piston be the NOMINAL mass following the protocol describe in Section 3.6. This ensures that PG9000 will correctly determine the true mass value loaded. Failure to enter nominal mass values following the PG9000 mass loading protocol is likely to result in out of tolerance mass load determination and pressure definitions.

Note

- **The setting of the RES function has no effect on the resolution of mass load entries in *mass to pressure* mode (see Section 3.11.10).**
- **The *mass to pressure* mass entry is expressed in nominal mass while the MAIN run screen displays the true mass loaded. For this reason, the nominal mass loading instruction and the true mass displayed in the main run screen are slightly different values. This is normal operation (see Section 3.6).**

3.11.11.3 Commands for zero pressure, ending a test

Entering a value of zero as the target pressure is a convenient way to end a test and vent the automated pressure control component when AutoGen is ON.

Entering a value of zero in *pressure to mass* mode causes the following sequence to occur:

❶ Stop piston rotation if AutoRotate is ON.

❷ Vent pressure control component if AutoGen is ON or prompt operator to vent.

❸ A special run screen displays reflecting that the PG9000 is at rest and the mass loading bell may not be installed. The display is:

1. **<?>** in ready/not ready indicator positions as status of piston is unknown since mass loading bell may not be installed.
2. Unknown pressure except in absolute by atmosphere measurement mode in which the current value of atmospheric pressure is displayed. This is the value of absolute by atmospheric pressure when the system is vented.
3. Unknown/meaningless mass load.
4. Unknown/meaningless piston position.

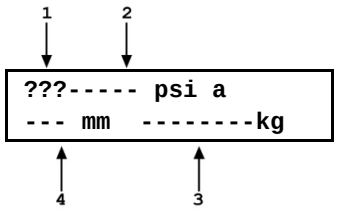

3.11.12 [P OR M]

❍ PURPOSE

To select between PG9000 *pressure to mass* or *mass to pressure* operation mode.

❍ PRINCIPLE

Piston gauges are generally used either to define desired pressure set points (e.g. when applying reference pressures to a device to be calibrated) or to measure a static pressure (e.g. when performing a crossfloat intercomparison with another piston gauge). PG9000s support these two typical situations with two operating modes: *pressure to mass* and *mass to pressure.*

In *pressure to mass* operating mode, the operator enters target pressure values and the PG9000 provides instructions of the mass to load to achieve the desired target pressure.

In *mass to pressure* operating mode, the operator enters the mass currently loaded and the PG9000 determines the pressure resulting from the current mass load. *Mass to pressure mode* is also useful to determine the true mass resulting from a nominal mass load (see Section 3.6).

© 1998-2010 Fluke Calibration

원문: Fluke Calibration PG9602/9607 메뉴얼(영문) · 제조사 원문 자료입니다. 사양은 제조사 사정에 따라 변경될 수 있습니다.

TESSOL Technical Library

TS-TL-FLK-082

we measure, we calibrate, we validate.
㈜테솔 · www.tessol.com TS-TL-FLK-082 89 / 192
KOLAS 국제공인교정기관 · ISO/IEC 17025

The P OR M function is used to set the PG9000 operating mode to either pressure to mass or mass to pressure.

❍ **OPERATION**

Note

For details on *pressure to mass* and *mass to pressure* operation, see Section 3.11.11.

To access the P OR M function, press **[P OR M]**, the display is:

```
Select entry mode:
1pressure 2mass
```

Selecting **<1pressure>** activates *pressure to mass* mode and returns to the previous run screen.

Selecting **<2mass>** activates *mass to pressure* mode and returns to the previous run screen.

3.11.13 [↻] and [↻], [←]

Note

PG9607 is a unique configuration of PG9000 that utilizes a floating cylinder with a stationary piston. This is in contrast with other PG9000 models that use a floating piston and a stationary cylinder. For consistency 'Piston' refers to the floating component on which mass is loaded in this and other noted sections.

❍ **PURPOSE**

To activate motorized piston rotation manually.

❍ **PRINCIPLE**

Motorized rotation engages and disengages to rotate or stop the rotation of the PG9000 piston.

Motorized rotation can be set to operate automatically to maintain the piston within *Ready* condition rotation rate limits when the piston is floating and stop rotation before changing the pressure or mass load (see Section 3.11.8). Motorized rotation can also be engaged manually to accelerate or brake piston rotation at any time under direct operator control.

[↻] is used for momentary acceleration of piston rotation. **[↻]** followed by **[←]** is used to start a function that stops piston rotation.

❍ **OPERATION**

To momentarily engage the motorized piston rotation system and accelerate the piston, press **[↻]** from any run screen. If PG9000 is equipped with motorized rotation, the motorized rotation system engages and remains engaged until maximum rotation rate has been achieved or the key is released.

The display is a modified version of the 1st system run screen to indicate the piston rotation is being accelerated while showing rotation rate and position:

1. Current piston rotation rate.
2. Current rate of piston vertical displacement.
3. Current piston position.

```
1
12 rpm ACCELERATING
+ 2.05 mm    0.1/min
3            2
```

To start the piston braking function press and hold **[↻]**, then press **[←]**. The motorized rotation system engages and stays engaged until the piston rotation is stopped. Once the braking function starts the keys may be released and the function will complete unless **[ESCAPE]** is pressed.

원문: Fluke Calibration PG9602/9607 메뉴얼(영문) · 제조사 원문 자료입니다. 사양은 제조사 사정에 따라 변경될 수 있습니다.

we measure, we calibrate, we validate.
㈜테솔 · www.tessol.com TS-TL-FLK-082 90 / 192
KOLAS 국제공인교정기관 · ISO/IEC 17025

TS-TL-FLK-082

The display is a modified version of the 1st system run screen to indicate the piston rotation is being decelerated while showing rotation rate and position:

1. Current piston rotation rate.
2. Current rate of piston vertical displacement.
3. Current piston position.

```
48 rpm DECELERATING
+ 2.05 mm    0.1/min
```

To interrupt the piston rotation braking routine, press **[ESCAPE]**.

Note

The motorized rotation system can be set to operate automatically based on current piston position and rotation rate. See Section 3.11.8 for information.

3.12 [SETUP] Menu

❍ **PURPOSE**

To select, view and edit the SETUP files that determine the source of the values that PG9000 uses in its calculation of defined pressure and as criteria for *Ready/Not Ready* condition determination.

❍ **PRINCIPLE**

PG9000 piston gauges perform continuous, real time calculations of the pressure defined by the floating piston under current conditions (see Section 7.2 for the details on the calculations applied). The calculations are used to determine the defined pressure displayed in the MAIN run screen, and to arrive at the mass to load value when a target pressure is entered in *pressure to mass* mode.

The equations that PG9000 uses to calculate pressure include many instrument and ambient variables. PG9000 allows the source of the value used for each variable to be defined. For example, the value of barometric pressure used to calculate current air density and to add to gauge pressure to define absolute pressure in *absolute by atmosphere* mode could come either from PG9000's internal sensor, an external barometer connected to PG9000's COM2, a user entered value or be set to standard atmospheric pressure. The PG9000 SETUP function allows the source (and in some cases the value) of the variables used in the pressure equations to be specified. In order to allow various combinations of sources and/or values to be setup and recalled, SETUP files can be created, stored, edited and recalled. The SETUP files also include certain variables used to determine PG9000 *Ready/Not Ready* status. Table 16 identifies the variables included in the SETUP file, the factory source setting for each variable and the normal value for each variable.

Variable source and value selections are recorded in SETUP files. These files can be stored and recalled so that specific combinations of variable sources and/or values can be conveniently recalled. There are 20 SETUP files. File #1 is a factory SETUP file that cannot be edited. It includes the factory default variable choices and normal values.

Note

SETUP files, USER values and PG9000's calculation capabilities can be used to calculate defined pressure in specific conditions independent of actual PG9000 operation.

The SETUP function supports the following:

- View SETUP files (see Section 3.12.2);
- Create/edit SETUP files (see Section 3.12.3);
- Select active SETUP file (see Section 3.12.1).

© 1998-2010 Fluke Calibration

원문: Fluke Calibration PG9602/9607 메뉴얼(영문) · 제조사 원문 자료입니다. 사양은 제조사 사정에 따라 변경될 수 있습니다.

we measure, we calibrate, we validate.
㈜테솔 · www.tessol.com TS-TL-FLK-082 91 / 192
KOLAS 국제공인교정기관 · ISO/IEC 17025

TESSOL Technical Library
TS-TL-FLK-082

Table 16. SETUP File Choices, Factory Preferred Choice and Normal Value

VARIABLE	SOURCE CHOICES	FACTORY DEFAULT CHOICE	NORMAL VALUE
Atmospheric pressure	1. Internal 2. Normal 3. User 4. COM2	1. Internal	101.325 kPa (14.6959 psi)
Ambient temperature	1. Internal 2. Normal 3. User	1. Internal	20 °C
Ambient relative humidity	1.Internal 2. Normal 3. User	1. Internal	45 %RH
Piston-cylinder temperature	1. Internal 2. Normal 3. User	1. Internal	20 °C
Gravity	1. Local 2. Normal 3. User	1. Local	9.806650 m/s^2
Vacuum	1. COM2 2. Normal 3. User	1. COM2	0 Pa
Ready/Not Ready Piston position	1. User	1. User	± 2.5 mm from midfloat position (default)
Ready/Not Ready Maximum vacuum reference pressure in absolute by vacuum mode	1. User	1. User	5 Pa (default)

Note

The factory default SETUP choice is the SETUP choice setting for all variables in a new SETUP file. SETUP file #1 is fixed to factory SETUP choices and cannot be altered.

❍ **OPERATION**

To access the SETUP menu, press **[SETUP]** from the main run screen. The display is:

```
Current SETUP: #01
1select 2view 3edit
```

#nn in the upper right hand corner displays the number of the SETUP file that is currently active.

Select **<1select>** to select a different active SETUP file. Select **<2view>** to view the variable choices and values of the active SETUP file. Select **<3edit>** to create or edit a SETUP file.

See Sections 3.12.1 to 3.12.3 for detailed information on each SETUP function operation.

3.12.1 <1select>

❍ **PURPOSE**

To change the active SETUP file number.

⚠ Caution

Changing the current SETUP file will change the source and in some cases the values of the variables used by PG9000 in calculating defined pressure. SETUP files should be selected and changed only by qualified personnel. Incorrect SETUP file selection may cause out of tolerance calculations and measurements. See Section 3.12, PRINCIPLE, for information on SETUP files and their use.

원문: Fluke Calibration PG9602/9607 메뉴얼(영문) · 제조사 원문 자료입니다. 사양은 제조사 사정에 따라 변경될 수 있습니다.

TS-TL-FLK-082

we measure, we calibrate, we validate.
KOLAS 국제공인교정기관 · ISO/IEC 17025
㈜테솔 · www.tessol.com TS-TL-FLK-082 92 / 192

❍ **OPERATION**

To select a SETUP file number to make it the active SETUP file, press **[SETUP]** and select **<1select>**. In the following screen enter the number of the desired SETUP file and press **[ENTER]**. If a valid SETUP file number has been entered, operation returns to the previous run screen with the selected SETUP file number displayed and active.

Note

- **Entering an invalid SETUP file number causes an error message to be displayed briefly and returns to the select SETUP file screen.**
- **If the SETUP file selected specifies COM2 as the source of barometric pressure, PG9000 will attempt to read a barometer on COM2 when initializing the new SETUP file. If PG9000 is unable to read a barometer on COM2, a communications time out message is displayed briefly and operation returns to the select SETUP file screen. See Section 3.13.5.4 for information on configuring COM2 to read an external barometer.**

3.12.2 <2view>

❍ **PURPOSE**

To view the variable source choices and values of any SETUP file number.

❍ **OPERATION**

Note

- **Selecting <2view> SETUP allows the variable source choices and values of the active SETUP file for viewing only. <2view> does not make the viewed SETUP file active. To select the active SETUP file, press [SETUP] and select <1select>.**
- **See Table 16 for a listing of the source choices for each variable.**

To view an existing SETUP file, press **[SETUP]** and select **<2view>**. The display is:

```
View SETUP file:
#02
```

1

1. Entry field for number of SETUP file to be viewed. Defaults to SETUP file currently selected. Must be a number from 2 to 10.

Enter the desired SETUP file number and press **[ENTER]**.

If a valid SETUP file number is entered, the display is:

```
View #02 latmP 2ambT
3%RH 4PCT 5g 6READY↓
7vac
```

Select **<1atmP>** to view the atmospheric pressure variable source choice and current value. The value is displayed in the current pressure units (see Section 3.11.3).

Select **<2ambT>** to view the ambient temperature variable source choice and the current value. The value is displayed in degrees Centigrade **[°C]**.

Select **<3%RH>** to view the ambient relative humidity variable source choice and the current value. The value is displayed in %RH.

Select **<4PCT>** to view the piston-cylinder temperature variable source choice and the current value. The value is displayed in degrees Centigrade **[°C]**.

Select **<5g>** to view the gravity variable source choice and the current value. The value is displayed in meters per second squared **[m/s^2]**.

© 1998-2010 Fluke Calibration

원문: Fluke Calibration PG9602/9607 메뉴얼(영문) · 제조사 원문 자료입니다. 사양은 제조사 사정에 따라 변경될 수 있습니다.

TS-TL-FLK-082

we measure, we calibrate, we validate.
㈜테솔 · www.tessol.com TS-TL-FLK-082 93 / 192
KOLAS 국제공인교정기관 · ISO/IEC 17025

Select **<6READY>** to view the values of *Ready/Not Ready* status criteria (see Section 3.4). These include:

<1Pposition>: Piston position *Ready/Not Ready* limits (see Section 3.4.1). The value is displayed as a band in millimeters about mid-float position **[± mm]** (see Section 3.5).

<2vac>: Maximum reference vacuum pressure limit when operating in absolute by vacuum mode. The value is displayed in Pascal **[Pa]**.

Select **<7vac>**: to view the reference vacuum variable source choice and the current value. The value is displayed in Pascal **[Pa]**.

3.12.3 <3edit>

❍ PURPOSE

To edit an existing SETUP file and/or to create a new SETUP file.

Note

See Section 3.12, PRINCIPLE for information on SETUP files and their purpose.

❍ OPERATION

Note

- **SETUP file #1 is the factory preferred file and it cannot be edited.**
- **See Table 16 for a listing of the source choices for each variable.**

To edit an existing SETUP file or create a new SETUP file, press **[SETUP]** and select **<3edit>**. The display is:

```
Edit SETUP file:
#02
```

1. Entry field for number of SETUP file to be edited or created. Defaults to SETUP file currently selected. Must be a number from 2 to 10.

Enter the desired SETUP file number and press **[ENTER]**.

If a valid SETUP file number is entered, the display is:

```
Edit #02 latmP 2ambT
3%RH 4PCT 5g 6READY↓
 7vac
```

Selecting an item leads to the variable source choices menu for that item. The cursor is on the source choice that is currently selected in that SETUP file number. Select the desired variable source. The selection causes the variable choice selection to be made and returns to the edit menu. From the variable source choice menus, pressing **[ENTER]** or **[ESCAPE]** returns to the edit selection menu. This allows easy, discreet movement between variable source choices when editing a SETUP file.

Select **<1atmP>** to specify the atmospheric pressure variable source for the pressure values that are used to calculate ambient air density and to add to gauge pressure measurements to calculate absolute pressure in absolute by addition of atmosphere mode. Selecting **<1atmP>** offers the atmospheric pressure variable source choices:

<1internal> Use real time readings from PG9000's on-board barometer.

<2normal> Use a fixed value of 101.325 kPa (14.6959) psi.

<3user> Use a fixed user entered value. If **<3user>** is selected, the user value must be entered, in the current pressure unit of measure (see Section 3.11.3).

<4COM2> Use real time readings from the device connected by RS232 to PG9000's COM2 port. The external barometer must be properly set up to communicate with PG9000 (see Section 3.13.5.4 for information on setting up to read an external barometer).

원문: Fluke Calibration PG9602/9607 메뉴얼(영문) · 제조사 원문 자료입니다. 사양은 제조사 사정에 따라 변경될 수 있습니다.

TESSOL Technical Library

TS-TL-FLK-082

we measure, we calibrate, we validate.
KOLAS 국제공인교정기관 · ISO/IEC 17025

Note

For differential mode operation (see Section 3.11.4.1) the AtmP selection must be <4COM2>.

Select **<2ambT>** to specify the ambient temperature variable source for the temperature values that are used to calculate ambient air density. Selecting **<2ambT>** offers the temperature variable source choices:

<1internal>: Use real time readings from PG9000's ambient temperature platinum resistance thermometer in the Temperature - Humidity (TH) Probe.

<2normal>: Use a fixed value of 20 °C.

<3user>: Use a fixed user entered value. If **<3user>** is selected, the user value must be entered, in degrees Centigrade **[°C]**.

Select **<3%RH>** to specify the relative humidity variable source for the relative humidity values that are used to calculate ambient air density. Selecting **<3%RH>** offers the relative humidity variable source choices:

<1internal>: Use real time readings from PG9000's relative humidity sensor in the Temperature - Humidity (TH) Probe.

<2normal>: Use a fixed value of 45 %RH.

<3user>: Use a fixed user entered value. If **<3user>** is selected, the user value must be entered, in percent relative humidity **[%RH]**.

Select **<4PCT>** to specify the piston-cylinder temperature variable source for the temperature values that are used to compensate piston-cylinder effective area for temperature. Selecting **<4PCT>** offers the temperature variable source choices:

<1internal>: Use real time readings from PG9000's on-board piston-cylinder temperature platinum resistance thermometers (embedded in the piston-cylinder module mounting post).

<2normal>: Use a fixed value of 20 °C.

<3user>: Use a fixed user entered value. If **<3user>** is selected, the user value must be entered, in degrees Centigrade **[°C]**.

Select **<5g>** to specify the value of acceleration due to gravity that is used in calculating the force applied to the piston. Pressing **<5g>** offers the gravity variable source choices:

<1locall>: Use the fixed value of local gravity stored under **[SPECIAL]**, **<6gl>** (see Section 3.11.6).

<2normal>: Use a fixed value of 9.806650 m/s^2.

<3user>: Use a fixed user entered value different from the current local gravity value stored in the **[SPECIAL]**, **<6gl>** menu option. If **<3user>** is selected, the user value must be entered, in meters per second squared [m/s^2].

Select **<6READY>** to edit the values of *Ready/Not Ready* status criteria (see Section 3.4). These include:

<1position>: Piston position limits. Edit the fixed value, in millimeters **[mm]**, of the band around mid-float position within which the piston position is *Ready* (see Section 3.4.1). This also determines the limit at which the piston is refloated by the GEN function when GEN is ON (see Section 3.11.9).

<2vacl>: Maximum reference vacuum pressure when operating in absolute by vacuum mode. Edit the value, in Pascal **[Pa]**, under which the reference vacuum must be for a vacuum *Ready* condition to occur (see Section 3.4.3).

© 1998-2010 Fluke Calibration

원문: Fluke Calibration PG9602/9607 메뉴얼(영문) · 제조사 원문 자료입니다. 사양은 제조사 사정에 따라 변경될 수 있습니다.

we measure, we calibrate, we validate.
㈜테솔 · www.tessol.com TS-TL-FLK-082 95 / 192
KOLAS 국제공인교정기관 · ISO/IEC 17025

TESSOL Technical Library
TS-TL-FLK-082

Select **<7vac>** to specify the reference vacuum variable source for the value used for the pressure under the bell jar when calculating the absolute pressure defined in *absolute by vacuum* mode. Pressing **<7vac>** offers the reference vacuum variable source choices:

<1COM2>: Use real time readings from the device connected by RS232 to PG9000's COM2 port. **<1COM2>** is the selection for the standard PG9000 reference vacuum sensor included with the optional vacuum reference hardware. If a different external vacuum gauge is used in place of the default, it must be properly set up to communicate with PG9000 (see Section 3.13.5.5).

<2normal>: Use a fixed value of 0 Pa.

<3user>: Use a fixed user entered value. If **<3user>** is selected, the user value must be entered, in Pascal **[Pa]**.

3.13 [SPECIAL] Menu

❍ PURPOSE

The **[SPECIAL]** key accesses a menu of PG9000 functions and settings that are less commonly or not regularly used in normal operation.

❍ OPERATION

To access the SPECIAL menu, press **[SPECIAL]** from the main run screen. This display is:

```
1PC/MS 2presU 3head
4prefs 5remote 6gl↓
7cal 8AMH 9reset
```

Note

Some screens, such as the SPECIAL menu, go beyond the two lines provided by the display. This is indicated by a flashing arrow in the second line of the display. Press the [←] and [→] keys to move the cursor to access the lines that are NOT visible or directly enter the number of the hidden menu choice if you know it.

Special menu choices include:

<1PC/MS>: Edit and view stored piston-cylinder module and mass set metrological information. Select mass set to be used (see Section 3.13.1).

<2presU>: Customize the pressure unit of measure choices available under **[UNIT]** (see Section 3.13.2).

<3head>: Change the height unit of measure and the fluid used in DUT head corrections; adjust the barometer head height; turn the automated piston position head correction ON and OFF (see Section 3.13.3).

<4prefs>: To access a menu of internal PG9000 operational preferences and functions including screen saver, sounds, time/date, instrument ID and user level protection (see Section 3.13.4).

<5remote>: Set up/modify PG9000 RS232 (COM1, COM2, COM3, COM4) and IEEE-488 interfaces. Test RS232 ports. Set up external barometer or vacuum gauge communications (see Section 3.13.5).

<6gl>: Set the value of local gravity used by PG9000 in reference pressure calculations when *gl* is specified as the gravity value in the active SETTINGS file (see Section 3.13.6).

<7cal>: View the output of and adjust PG9000 internal sensors and measurement systems (see Section 3.13.7).

<8AMH>: View the status of and directly control an AMH automated mass handler (see Section 3.13.8).

<9reset>: Access and execute various reset options (see Section 3.13.9).

원문: Fluke Calibration PG9602/9607 메뉴얼(영문) · 제조사 원문 자료입니다. 사양은 제조사 사정에 따라 변경될 수 있습니다.

TESSOL Technical Library

TS-TL-FLK-082

we measure, we calibrate, we validate.
㈜테솔 · www.tessol.com TS-TL-FLK-082 96 / 192
KOLAS 국제공인교정기관 · ISO/IEC 17025

3.13.1 <1PC/MS>

❍ PURPOSE

To perform the following piston-cylinder module and mass set metrological functions:

- View and edit piston-cylinder module metrological information.
- Create new piston-cylinder modules.
- View and edit mass set and mass loading bell information.
- Create new mass sets and mass loading bells.
- Select the active mass set and mass loading bell.

Note

See Section 3.11.2 for information on more direct access to selecting the active piston-cylinder module.

⚠ Caution

The piston-cylinder module and mass set information contained in <1PC/MS> is element specific metrological data. Uninformed or accidental altering of this information may lead to out of tolerance measurements. Piston-cylinder module and mass set information should only be edited by qualified personnel as part of the PG9000 calibration or recalibration process.

❍ PRINCIPLE

To calculate the pressure defined by its floating piston, PG9000 must have available the specific characteristics of the piston-cylinder module, mass set and mass loading bell that are being used. This information is entered, viewed and edited under **[SPECIAL]**, **<1PC/MS>**. This is also where the active mass and mass loading bell are selected.

The piston-cylinder module and mass set information required by PG9000 is reported on the Calibration Reports that are delivered with the metrological elements. When the PG9000 Platform and metrological elements are delivered together, the metrological elements information is entered by **Fluke Calibration** at the factory. If the metrological elements are delivered separately from the platform or after a recalibration when new data is available, the information must be entered or edited by the user.

❍ OPERATION

To access the piston-cylinder module, mass set and mass loading bell information, press **[SPECIAL]** and select **<1PC/MS>**. The display is:

```
1PC 2mass set
3mass bell
```

Select the type of metrological element that you would like to view, edit, create or select.

See Sections 3.13.1.1 to 3.13.1.15 for operation of specific piston-cylinder module, mass set and mass bell functions as follows:

- Create a new piston-cylinder module (see Section 3.13.1.1).
- Edit piston-cylinder module information (see Section 3.13.1.2).
- View piston-cylinder module information (see Section 3.13.1.3).
- Delete a piston-cylinder module (see Section 3.13.1.4).
- Select the active piston-cylinder module (see Section 3.13.1.5).
- Create a new mass set (see Section 3.13.1.6).
- Edit mass set information (see Section 3.13.1.7).
- View mass set information (see Section 3.13.1.8).
- Delete a mass set (see Section 3.13.1.9).
- Select a mass set (see Section 3.13.1.10).
- Add a mass loading bell (see Section 3.13.1.11).

© 1998-2010 Fluke Calibration

원문: Fluke Calibration PG9602/9607 메뉴얼(영문) · 제조사 원문 자료입니다. 사양은 제조사 사정에 따라 변경될 수 있습니다.

TESSOL Technical Library

TS-TL-FLK-082

we measure, we calibrate, we validate.
㈜테솔 · www.tessol.com TS-TL-FLK-082 97 / 192
KOLAS 국제공인교정기관 · ISO/IEC 17025

- Edit mass loading bell information (see Section 3.13.1.12).
- View the active mass loading bell (see Section 3.13.1.13).
- Delete a mass loading bell (see Section 3.13.1.14).
- Select a mass loading bell (see Section 3.13.1.15).

3.13.1.1 Create a Piston-Cylinder Module

❍ **PURPOSE**

To create a new piston-cylinder module that will be available for selection from the **[P-C]** function key. Use this function when a new piston-cylinder module has been acquired.

Note

If the piston-cylinder module and PG9000 Platform were delivered together, the piston cylinder module has already been entered at the factory. Before creating a new piston-cylinder module, press [P-C] to check if it already exists (see Section 3.11.2).

❍ **PRINCIPLE**

The PG9000 add and edit piston-cylinder module functions allow piston-cylinder metrological module variable values to be defined and stored. These values will be used by PG9000 in calculating defined pressure, piston-cylinder range and pressure to mass and mass to pressure values when the piston-cylinder module is made active using **[P-C]**. The information needed can be found in the calibration report for the piston-cylinder module.

Setting up or editing a piston-cylinder module requires specifying, in sequential order, the following:

❶ Serial number (S/N) **[nnnn]**.

❷ Effective area (Ae) at 0 pressure and 20 °C **[mm2]**.

❸ Piston temperature coefficient **[linear thermal expansivity/°C]**.

❹ Cylinder temperature coefficient **[linear thermal expansivity/°C]**.

❺ Effective area pressure coefficient **[change in Ae/MPa]**.

❻ Piston-cylinder surface tension effect **[N/m]**.

❼ Reference level offset **[mm]**.

❽ Piston assembly mass **[kg]**.

❾ Piston assembly apparent density **[kg/m3]**.

❿ Rotation rate ready limits **[rpm]**.

⓫ k(P) **[kg/mm/min]**.

⓬ Calibration report number **[nnnnnnnnnn]**.

⓭ Calibration report date **[yyyymmdd]**.

❍ **OPERATION**

Note

- **Adding or editing a piston-cylinder module requires the user to specify a large number of variables in a series of data entry screens described below. For a summary of the piston cylinder module data requirements in the order they are edited see PRINCIPLE in this section.**

원문: Fluke Calibration PG9602/9607 메뉴얼(영문) · 제조사 원문 자료입니다. 사양은 제조사 사정에 따라 변경될 수 있습니다.

- **PG9000 can store up to 18 piston-cylinder module (PC) files. When <3add> is selected and all the files have already been used, a warning is displayed. A file must be deleted before a file can be added.**

To create a new piston-cylinder module press **[SPECIAL]** , **<1PC/MS>** and select **<1PC>**, **<3add>**. A series of data entry menus will be presented. Edit each menu to reflect the correct information on the piston-cylinder module being added. Press **[ENTER]** after each entry to proceed to the next menu. Pressing **[ESCAPE]** at any point offers an **<Abandon edits?>** query and then returns to the **<1PC>** menu without saving any of the edited data or **[ENTER]** returns to the add piston-cylinder module process.

The data entry screens to add or edit a piston-cylinder module are, in order:

- **Serial number (S/N):** Edit the serial number using four digits. This value is marked on the piston cap. The default is **1**.
- **Effective area at 0 pressure and 20 °C:** Edit the value of the piston-cylinder effective area at 0 pressure and 20 °C. The value must be entered in square millimeters **[mm^2]**. This value is reported in the calibration report for the piston-cylinder module. The default is **0**.
- **Piston temperature coefficient:** Edit the value of the piston material linear thermal expansivity. The value must be entered in terms of relative change per degree centigrade **[nn x 10^{-6}/°C]**. The E-6 exponent is fixed. This value is reported in the calibration report for the piston-cylinder module. The default is **00**.
- **Cylinder temperature coefficient:** Edit the value of the cylinder material linear thermal expansivity. The value must be entered in terms of relative change per degree centigrade **[nn x 10^{-6}/°C]**. The 10^{-6} exponent is fixed. This value is reported in the calibration report for the piston-cylinder module. The default is **00**.
- **Effective area pressure coefficient:** Edit the value of the piston-cylinder change in effective area in terms of relative change per MegaPascal **[n.nn x 10^{-6}/MPa]**. This value is reported in the calibration report for the piston-cylinder module. The default is **0.00**.
- **Piston-cylinder surface tension effect:** Edit the value of the surface tension effect of the pressurized fluid on the piston. The value must be entered in Newtons per meter **[N/m]**. This value is reported in the calibration report for the piston-cylinder module. The default is **0.00**. The correct value for all gas lubricated, gas operated piston-cylinders is **0**.
- **Reference level offset:** Edit the value of the reference level offset which corrects the piston-cylinder reference level for hollow pistons (5 kPa/kg,10 kPa/kg, 20 kPa/kg and 50 kPa/kg gas lubricated piston-cylinder modules only) to the reference level marked on the mounting post (see Section 3.11.7). The value must be entered in millimeters **[mm]**. This value is reported in the calibration report for 5 kPa/kg, 10 kPa/kg, 20 kPa/kg and 50 kPa/kg gas lubricated piston-cylinders; it is **0** for all other piston-cylinders. The default is **0.00**.
- **Piston assembly mass:** Edit the value of the mass of the piston assembly (piston + piston head + piston cap). The value must be entered in kilogram **[kg]**. This value is reported in the calibration report for the piston-cylinder module. The default is **0.200000**.
- **Piston assembly average density:** Edit the value of the average density of the piston assembly (piston + piston head + cap). The value must be entered in kilogram per cubic meter **[kg/m^3]**. This value is reported in the calibration report for the piston-cylinder module. The default is **0**.
- **Rotation rate ready limits [rpm]:** The minimum *Ready* rotation rate (see Section 3.4.2) and the target maximum rate. The values must be

© 1998-2010 Fluke Calibration

원문: Fluke Calibration PG9602/9607 메뉴얼(영문) · 제조사 원문 자료입니다. 사양은 제조사 사정에 따라 변경될 수 있습니다.

TS-TL-FLK-082

we measure, we calibrate, we validate.
㈜테솔 · www.tessol.com TS-TL-FLK-082 99 / 192
KOLAS 국제공인교정기관 · ISO/IEC 17025

entered in rotations per minute **[rpm]**. The values (min and max) must be entered in rotations per minute **[rpm]**. The value automatically defaults to the factory recommended value for the piston-cylinder size and pressurized medium. In most circumstances, the factory default values should be used.

- **k(P) coefficient [kg/mm/min]:** Edit the value of the mass to equilibrium fall rate proportionality coefficient. This value is not used in PG9000. The default value is **0.00**.
- **Calibration report number:** Edit the calibration report number to reflect the number of the piston-cylinder module calibration report that is currently valid. The number can be up to ten digits. The default is **1**.
- **Calibration report date:** Edit the date of the current calibration report. The date must be expressed in yyyymmdd format. The default is **20000101**.

After pressing **[ENTER]** to accept the edited calibration report date the option to save the edited piston-cylinder module information is presented. The display is:

```
Save PC S/N nnnn
1no 2yes
```

Select **<2yes>** to save the piston-cylinder module information under serial number nnnn and return to the **<1PC/MS>** menu.

Select **<1no>** to discard all edits and return to the **<1PC/MS>** menu.

3.13.1.2 Edit a Piston-Cylinder Module

❍ **PURPOSE**

To edit information contained in an existing piston-cylinder module file. Use this function to change piston-cylinder module data after a recalibration.

❍ **PRINCIPLE/OPERATION**

⚠ Caution

Piston-cylinder module information is element specific metrological data. Uninformed or accidental altering of this information may lead to out of tolerance measurements. Piston cylinder module information should only be edited by qualified personnel as part of the PG9000 calibration or recalibration process.

See Section 3.13.1.1 describing adding a new piston-cylinder module. The principles and procedures to add or edit a piston-cylinder module are identical except for the identification of the piston-cylinder module to be edited.

To edit information on an existing piston-cylinder module, press **[SPECIAL]** , **<1PC/MS>** and select **<1PC>**, **<2edit>**.

The display identifies the currently active piston-cylinder module. Press **[ENTER]** to edit the currently active piston-cylinder module or press **[P-C]** or **[←]** or **[→]** to advance through the other piston-cylinder modules available. When the desired piston-cylinder module is identified, press **[ENTER]** to proceed with editing piston-cylinder module information. Operation of the editing function is identical to the add new piston-cylinder module procedure (see Section 3.13.1.1, OPERATION).

3.13.1.3 View a Piston-Cylinder Module

❍ **PURPOSE**

To view the information contained in an existing piston-cylinder module file.

원문: Fluke Calibration PG9602/9607 메뉴얼(영문) · 제조사 원문 자료입니다. 사양은 제조사 사정에 따라 변경될 수 있습니다.

TESSOL Technical Library

TS-TL-FLK-082

we measure, we calibrate, we validate.
㈜테솔 · www.tessol.com TS-TL-FLK-082 100 / 192
KOLAS 국제공인교정기관 · ISO/IEC 17025

❍ **PRINCIPLE/OPERATION**

See Section 3.13.1.1, PRINCIPLE. The piston-cylinder module viewing function allows the piston-cylinder module information to be viewed but not altered.

To view information on an existing piston-cylinder module, press **[SPECIAL]** , **<1PC/MS>** and select **<1PC>**, **<3view>**.

The display identifies the currently active piston-cylinder module. Press **[ENTER]** to view the currently active piston-cylinder module or press **[P-C]** or **[←]** or **[→]** to advance through the other piston-cylinder modules available (see Section 3.11.2). When the desired piston cylinder module is identified, press **[ENTER]** to proceed with viewing piston-cylinder module information. Successive pressing of **[ENTER]** steps through the piston-cylinder information screens in the same order as the add and edit functions (see Section 3.13.1, View Piston-Cylinder Module, Principle).

3.13.1.4 Delete a Piston-Cylinder Module

❍ **PURPOSE**

To delete a piston-cylinder module file so that it is no longer included in the piston-cylinder modules available for selection by pressing **[P-C]**.

❍ **OPERATION**

⚠ Caution

Once a piston-cylinder module file has been deleted it cannot be recovered. To recreate it, the add piston-cylinder module function must be used (see Section 3.13.1.1) which requires entering all the piston-cylinder module information. Before deleting a piston-cylinder module, consider editing it (see Section 3.13.1.2).

To delete a piston-cylinder module press **[SPECIAL]** , **<1PC/MS>** and select **<1PC>**, **<4delete>.**

The display identifies the currently active piston-cylinder module. Press **[ENTER]** to delete the currently active piston-cylinder module or press **[P-C]** or **[←]** or **[→]** to advance through the other piston-cylinder modules available (see Section 3.11.2). When the desired piston cylinder module is identified, press **[ENTER]** to proceed with deleting the piston cylinder module information. Confirmation to delete is required. Select **<2yes>** to delete the piston-cylinder module. Select **<1no>** to NOT delete.

Note

The active piston-cylinder module (piston-cylinder module that is currently selected) cannot be deleted. Before attempting to delete a piston-cylinder module, be sure it is not currently selected.

3.13.1.5 Select The Active Piston-Cylinder Module

❍ **PURPOSE**

To select the piston-cylinder module that is active and used by PG9000 in its mass loading and defined pressure calculations.

Note

This function serves the same purpose as pressing [P-C] (see Section 3.11.2).

❍ **OPERATION**

To select the active piston-cylinder module press **[SPECIAL]** , **<1PC/MS>** and select **<1PC>**, **<5select>**.

© 1998-2010 Fluke Calibration

원문: Fluke Calibration PG9602/9607 메뉴얼(영문) · 제조사 원문 자료입니다. 사양은 제조사 사정에 따라 변경될 수 있습니다.

we measure, we calibrate, we validate.
㈜테솔 · www.tessol.com TS-TL-FLK-082 101 / 192
KOLAS 국제공인교정기관 · ISO/IEC 17025

TESSOL Technical Library
TS-TL-FLK-082

3.13.1.6 Add a Mass Set

❍ **PURPOSE**

To create a new mass set that will be available for selection as the active mass set to load on the PG9000 piston. Use this function when a new mass set has been acquired or a mass set was deleted and must be reentered.

Note

If the mass set and PG9000 Platform were delivered together, the mass set has already been entered at the factory. Before creating a new mass set, check whether it already exists using the view mass set function (see Section 3.13.1.8).

❍ **PRINCIPLE**

The PG9000 add and edit mass set functions allow mass set composition and metrological variable values to be defined and stored. These values will be used by PG9000 when the mass set is made active to calculate nominal mass instructions and true mass loads. Up to three mass sets can be created.

Setting up or editing a mass set requires defining the density of the masses, the mass set composition and the true mass of each individual mass. This information can be found in the calibration report for the mass set.

Mass sets are created and edited in terms of mass groups reflecting the normal composition of a PG9000 mass set. Standard PG9000 mass sets are made up of these groups (see Section 2.1.2.2 for listings of standard PG9000 mass set compositions).

The mass groups of a **MANUAL** mass set include:

1. ***Make up* mass (4 or 9 kg)**: A single mass, sequentially numbered **1**. The value of this mass is 9 kg if the mass set main masses are 10 kg and 4 kg if the mass set main masses are 5 kg. The purpose of this mass is to arrive at a whole number nominal mass load equal to the set's main masses (10 kg or 5 kg) when added to the piston and mass loading bell.
2. **10 kg masses**: The main masses in a standard 80 or 100 kg mass set. Sequentially numbered from **1** up to the total number of 10 kg masses. Mass sets of < 80 kg do not normally include 10 kg masses.
3. **5 kg masses**: The main masses in any standard mass set of less than 80 kg. Sequentially numbered from **1** up to the total number of 5 kg masses. Standard 80 and 100 kg mass sets have one 5 kg mass.
4. **2 kg masses**: Every standard mass set has two 2 kg masses numbered **1** and **2**.
5. **1 kg masses**: Every standard mass set has one 1 kg mass numbered **1**.
6. **0.5 kg masses**: Every standard mass set has one 0.5 kg mass number **1**.
7. **0.2 kg masses**: Every standard mass set has two 0.2 kg masses numbered **1** and **2**.
8. **0.1 kg masses**: Every standard mass set has one 0.1 kg mass numbered **1**.
9. **Trim masses**: Every standard mass set has a trim mass set made up of masses from 50 to 0.01 g. These masses are NOT defined and entered as part of the mass set.

The mass groups of an **AMH-100-VAC** automated mass handler mass set include:

1. **10 kg Main masses**: Sequentially numbered from **1** to a maximum of **9**.
2. **6.4 kg mass**: Single tubular, binary mass.
3. **3.2 kg mass**: Single tubular, binary mass.
4. **1.6 kg mass**: Single tubular, binary mass.
5. **0.8 kg mass**: Single tubular, binary mass.

원문: Fluke Calibration PG9602/9607 메뉴얼(영문) · 제조사 원문 자료입니다. 사양은 제조사 사정에 따라 변경될 수 있습니다.

6. **0.4 kg mass**: Single tubular, binary mass.
7. **0.2 kg mass**: Single tubular, binary mass.
8. **0.1 kg mass**: Single tubular, binary mass.
9. **Trim masses**: Every standard mass set has a trim mass set made up of masses from 50 to 0.01 g. These masses are NOT defined and entered as part of the mass set.

⚠ Caution

When PG9000 provides mass loading instructions and calculates the true mass of the mass currently loaded, it assumes that the mass set in use has been set up correctly and that masses have been loaded following PG9000 mass loading protocol (see Section 3.6). For PG9000 mass loading protocol to operate properly, the mass set in use must be EXACTLY the mass set that has been defined by the add and/or edit mass function. No extra mass can be included, no mass used can be missing and the sequential numbers of masses in each mass group must be followed with the correct true mass value entered for each individual mass. Using a mass set that is not accurately set up may result in out of tolerance pressure definitions.

Note

Though the piston and the mass loading bell constitute part of the mass load, they are not included in the definition of a mass set. Also, one PG9000 system may be used with several piston-cylinder modules, mass loading bells and mass sets. Therefore, the piston mass and mass loading bell mass information are not part of the mass set. Piston mass information is defined and stored in the piston-cylinder module file (see Section 3.13.1.1) and mass loading bell information is defined and stored in a separate mass loading bell files (see Section 3.13.1.11). In an AMH mass set, the binary mass carrier and mass lifting shaft are considered part of the bell.

❍ **OPERATION**

⚠ Caution

Mass set information is element specific metrological data. Uninformed or accidental altering of this information may lead to out of tolerance measurements. Mass set information should only be edited by qualified personnel as part of the PG9000 calibration or recalibration process.

Note

- **To use the create or edit mass set function with a manual mass set, it is important to have an understanding of mass set structure and mass groups. Consult Section 3.6, PRINCIPLE, to familiarize yourself with this information before attempting to create or edit a mass set. Before creating or editing an AMH automated mass handler mass set, see Section 3.7.**
- **PG9000 can store up to 3 MS (mass set) files. When <3add> is selected and all the files have already been used, a warning is displayed. A mass set must be deleted before a mass set can be added.**

© 1998-2010 Fluke Calibration

원문: Fluke Calibration PG9602/9607 메뉴얼(영문) · 제조사 원문 자료입니다. 사양은 제조사 사정에 따라 변경될 수 있습니다.

we measure, we calibrate, we validate.
㈜테솔 · www.tessol.com TS-TL-FLK-082 103 / 192
KOLAS 국제공인교정기관 · ISO/IEC 17025

TS-TL-FLK-082

To create a new PG9000 mass set there are three sequential steps:

❶ Initialize mass set: Define serial number, density, mass set type (manual or AMH), calibration report number and date.

❷ Define individual masses: Edit, add and delete mass groups as necessary to identify and define all masses in the mass set.

❸ Save mass set file or abandon changes.

Step ❶: Initialize Mass Set

Press **[SPECIAL]** , **<1PC/MS>** and select **<2mass set>**, **<3add>**.

Edit the serial number to the number of the mass set being added and press **[ENTER].** The display is:

```
Add mass set:
S/N 1
```

Edit the density of the masses being added (all PG9000 mass sets have density of 8 000 kg/m3) and press **[ENTER]**. The display is:

```
Mass density:
8000 kg/m3
```

Select **<1manual>** for a manual mass set or **<2AMH>** for an automated mass handler mass set.

```
Mass set type:
1manual 2AMH
```

Edit the calibration report number (up to ten digits) to the number of the current calibration report of the mass set that is being added and press **[ENTER]**. The display is:

```
Cal report number?
1
```

Edit the calibration report date to the date of the current calibration report of the mass set that is being added (format must be YYYYMMDD) and press **[ENTER]**. [ENTER] leads to the second step of mass set adding or editing.

```
Cal report date?
20000101
```

Pressing **[ESCAPE]** at any point goes to an abandon edits warning screen. To continue with defining the mass set proceed to Step ❷.

Step ❷: Define Individual Masses

This step can only be reached by going through Step ❶.

If the mass set is a MANUAL mass set less than 80 kg, the display is:

```
Select mass grp (kg)
MKUP 5.00 2.00 1.001↓
0.50 0.20 0.10 ADD
```

If the mass set is an AMH automated mass handler mass set, the display is:

```
Select mass grp (kg)
MAIN 6.40 3.20 1.60↓
0.80 0□40 0.20 0.10
```

Note

Some screens, such as the SPECIAL menu, go beyond the two lines provided by the display. This is indicated by a flashing arrow in the second line of the display. Press the [←] and [→] keys to move the cursor to access the lines that are NOT visible or directly enter the number of the hidden menu choice if you know it.

원문: Fluke Calibration PG9602/9607 메뉴얼(영문) · 제조사 원문 자료입니다. 사양은 제조사 사정에 따라 변경될 수 있습니다.

Refer to Sections 3.13.1.6, PRINCIPLE and 3.6 for information on mass group definitions. To create the mass set, each and every mass in the mass set, no more and no less, (but not the piston and the bell) must be identified and its true mass entered. To select a mass group press the **[←]** and **[→]** keys to position the cursor on the mass group to be edited. If the mass is needed but not shown, select **<ADD>** to create a new mass group. To delete a mass group, enter **<0>** as the number of masses in the group.

⚠ Caution

All standard PG9000 MANUAL mass sets have a makeup mass (MKUP). This mass is 9 kg or 4 kg depending on the mass set (see Section 3.6, PRINCIPLE). It is imperative that the makeup mass be defined and entered in the MKUP group.

Operation within each mass group is identical, for example, select **<5.00>**. The display is:

1. Edit field for number of masses in the mass group.

```
# of masses in group
(0 deletes grp):   1
```

1

Edit the number of masses in group to reflect the number of masses of that nominal value there are in the group and press **[ENTER]**. The display is:

1. Sequential ID number of this specific mass within the mass group.
2. Edit field for the true value of this specific mass.

1

```
5.0 kg mass #1
True mass:  5.00000
```

2

Edit the mass value to the true value of the specific mass identified and press **[ENTER]**.

If there are additional masses in this mass group, the next display is the same as the display immediately above but with the next mass specific mass sequential ID number in the mass group. The screens continue until the true value of all of the masses within the group has been entered. After the last entry, the screen returns to the **<Select mass grp>** screen.

Edit, add and delete mass groups as necessary until all of the masses in the mass set (do not include pistons, bells and trim masses of 50 grams and less) have been entered, no more, no less. When Step ❷ is completed, press **[ESCAPE]** to go to Step ❸.

Note

Setting up an 80 kg or 100 kg manual mass set requires using <ADD> to add a 10 kg mass group as the 10 kg mass group is not included by default.

Step ❸: Save Mass Set File

Pressing **[ESCAPE]** in the mass set editing screen goes to the save screen.

The display is:

```
Save MS S/N 4573
1no 2yes
```

Select **<2yes>** to save the all changes made to the mass set and exit. Select **<1no>** to abandon all changes made to the mass set and exit.

© 1998-2010 Fluke Calibration

원문: Fluke Calibration PG9602/9607 메뉴얼(영문) · 제조사 원문 자료입니다. 사양은 제조사 사정에 따라 변경될 수 있습니다.

we measure, we calibrate, we validate.
㈜테솔 · www.tessol.com TS-TL-FLK-082 105 / 192
KOLAS 국제공인교정기관 · ISO/IEC 17025

TS-TL-FLK-082

3.13.1.7 Edit a Mass Set

❍ **PURPOSE**

To edit information contained in an existing mass set file. Use this function to change mass set data after a recalibration or if a mass set configuration changes.

❍ **PRINCIPLE/OPERATION**

⚠ Caution

Mass set information is element specific metrological data. Uninformed or accidental altering of this information may lead to out of tolerance measurements. Mass set information should only be edited by qualified personnel as part of the PG9000 calibration or recalibration process.

See Section 3.13.1.6 describing adding a new mass set. The principles and procedures to add or edit a mass set are identical except that the mass set to edit is selected from the existing mass sets screen.

The mass set type (manual or AMH) cannot be changed when a mass set is edited.

3.13.1.8 View a Mass Set

❍ **PURPOSE**

To view information contained in an existing mass set file.

❍ **OPERATION**

To view information contained in an existing mass set file press **[SPECIAL]** , **<1PC/MS>** and select **<2mass set>**, **<1view>**. The viewing function operates in the same manner as the add function (see Section 3.13.1.6).

3.13.1.9 Delete a Mass Set

❍ **PURPOSE**

To delete an existing mass set file entirely.

❍ **OPERATION**

⚠ Caution

Once a mass set file has been deleted it cannot be recovered. To recreate it, the add mass set function must be used (see Section 3.13.1.6) which requires entering all the mass set information. Before deleting a mass set, consider editing it (see Section 3.13.1.7).

To delete a mass set press **[SPECIAL]** , **<1PC/MS>** and select **<2mass set>**, **<4delete>.** Select the mass set to be deleted and press **[ENTER]**. Select **<2yes>** to delete the mass set. Press **<1no>** to NOT delete.

Note

The active mass set (mass set that is currently selected) cannot be deleted. Before attempting to delete a mass bell, be sure it is not currently selected.

3.13.1.10 Select Mass Set

❍ **PURPOSE**

To select a mass set to be active and used by PG9000 in its mass loading and defined pressure calculations. To initialize the optional AMH automated mass handler if present.

원문: Fluke Calibration PG9602/9607 메뉴얼(영문) · 제조사 원문 자료입니다. 사양은 제조사 사정에 따라 변경될 수 있습니다.

TS-TL-FLK-082

we measure, we calibrate, we validate.
㈜테솔 · www.tessol.com TS-TL-FLK-082 106 / 192
KOLAS 국제공인교정기관 · ISO/IEC 17025

❍ **OPERATION**

To select the active mass set press **[SPECIAL]** , **<1PC/MS>** and select **<2mass set>**, **<5select>**.

Mass sets for an AHM automated mass handler are identified by a letter **<A>** after their serial number.

Put the cursor on the desired mass set and press **[ENTER]**.

If a MANUAL mass set is selected, operation returns to the MAIN run screen.

If an AMH automated mass handler mass set is selected, the PG9000 platform attempts to establish communication with the AMH and initialize it. If the communication cannot be established with the AMH, an error is displayed. If communication with the AMH mass set is established, the AMH is initialized and all masses are loaded. If the AMH is unable to complete initialization, an error message is displayed. The most common reason for failure to complete initialization is inadequate drive pressure supply to the AMH. For trouble shooting, see the AMH/AMH-100 Operation and Maintenance Manual. If the AMH initialization completes successfully, operation returns to the main run screen with the AMH active. The AMH remains active until a non-AMH mass set is selected. The PG9000 platform will attempt to initialize the AMH on power up if an AMH mass set is the active mass set.

3.13.1.11 Add a Mass Loading Bell

❍ **PURPOSE**

To create a new mass loading bell that will be available for selection as the active mass loading bell. Use this function when a new mass loading bell has been acquired.

Note

If the mass loading bell and PG9000 Platform were delivered together, the mass loading bell has already been entered at the factory. Before creating a new mass loading bell, check whether it already exists (see Section 3.13.1.13).

❍ **PRINCIPLE**

See Section 3.13.1.6, PRINCIPLE.

❍ **OPERATION**

⚠ Caution

Mass loading bell information is element specific metrological data. Uninformed or accidental altering of this information may lead to out of tolerance measurements. Mass loading bell information should only be edited by qualified personnel as part of the PG9000 calibration or recalibration process.

Note

PG9000 can store up to 3 mass bell files. When <3add> is selected and all the files have already been used, a warning is displayed. A mass loading bell must be deleted before a mass loading bell can be added.

To create a new PG9000 mass loading bell press **[SPECIAL]** and select **<1PC/MS>**, **<3mass bell>**, **<3add>**.

Edit the serial number to the number of the mass bell being added and press **[ENTER]**. The display is:

```
Add mass bell:
S/N 1
```


© 1998-2010 Fluke Calibration

원문: Fluke Calibration PG9602/9607 메뉴얼(영문) · 제조사 원문 자료입니다. 사양은 제조사 사정에 따라 변경될 수 있습니다.

we measure, we calibrate, we validate.
㈜테솔 · www.tessol.com TS-TL-FLK-082 107 / 192
KOLAS 국제공인교정기관 · ISO/IEC 17025

TS-TL-FLK-082

Edit the average mass density of the mass loading bell and press **[ENTER]**. The value defaults to the default density for the typical mass loading bell for the PG9000 model. The display is:

```
Mass density?
5058 kg/m3
```

Note

The AMH automated mass handler mass bell includes the bell, the binary mass carrier and the mass lifting shaft.

Edit the calibration report number (up to ten digits) to the number of the current calibration report of the mass loading bell that is being added and press **[ENTER]**. The display is:

```
Cal report number?
1775
```

Edit the calibration report date to the date of the current calibration report of the mass loading bell that is being added and press **[ENTER]**. The display is:

```
Cal report date?
20040101
```

Edit the true mass value of the mass loading bell that is being added and press **[ENTER]**. The value defaults to the nominal mass of the typical mass loading bell for the PG9000 model. The display is:

```
Bell #2832
True mass: 0.449985
```

Select **<2yes>** to save the all changes made to the mass loading bell and exit.

Select **<2no>** to abandon all changes made to the mass loading bell and exit.

```
Save bell S/N 2832?
1no 2yes
```

3.13.1.12 Edit a Mass Loading Bell

❍ **PURPOSE**

To edit information contained in an existing mass loading bell file. Use this function to change mass loading bell data after a recalibration.

❍ **PRINCIPLE/OPERATION**

⚠ Caution

Mass loading bell information is element specific metrological data. Uninformed or accidental altering of this information may lead to out of tolerance measurements. Mass loading bell information should only be edited by qualified personnel as part of the PG9000 calibration or recalibration process.

See Section 3.13.1.11 describing adding a new mass loading bell. The principles and procedures to add or edit a mass loading bell are identical except that the mass loading bell to edit is selected from the existing mass loading bell screen.

3.13.1.13 View a Mass Loading Bell

❍ **PURPOSE**

To view information contained in an existing mass loading bell file.

❍ **OPERATION**

To view information contained in an existing mass loading bell file press **[SPECIAL]** and select **<1PC/MS>**, **<3mass bell>**, **<1view>**. The viewing function is identical to the add function (see Section 3.13.1.11).

원문: Fluke Calibration PG9602/9607 메뉴얼(영문) · 제조사 원문 자료입니다. 사양은 제조사 사정에 따라 변경될 수 있습니다.

TESSOL Technical Library

TS-TL-FLK-082

we measure, we calibrate, we validate.

㈜테솔 · www.tessol.com TS-TL-FLK-082 108 / 192

KOLAS 국제공인교정기관 · ISO/IEC 17025

3.13.1.14 Delete A Mass Loading Bell

❍ **PURPOSE**

To delete an existing mass loading bell file entirely.

❍ **OPERATION**

⚠ Caution

Once a mass loading bell file has been deleted it cannot be recovered. To recreate it, the add mass loading bell function must be used (see Section 3.13.1.11) which requires entering all the mass loading bell information. Before deleting a mass loading bell, consider editing it (see Section 3.13.1.12).

To delete a mass loading bell press **[SPECIAL]**, **<1PC/MS>** and select **<3mass bell>**, **<4delete>.**

Confirmation to delete is requested. Select **<2yes>** to delete the mass loading bell. Press **<1no>** to NOT delete.

Note

The active mass bell (mass bell that is currently selected) cannot be deleted. Before attempting to delete a mass bell, be sure it is not currently selected.

3.13.1.15 Select A Mass Loading Bell

❍ **PURPOSE**

To select the mass loading bell that is active and used by PG9000 in its mass loading and defined pressure calculations.

❍ **OPERATION**

To select the active mass loading bell set press **[SPECIAL]**, **<1PC/MS>** and select **<3mass bell>**, **<5select>**.

3.13.2 <2presU>

❍ **PURPOSE**

To customize the selection of pressure units that are available for selection from the UNIT function key (see Section 3.11.3).

❍ **PRINCIPLE/OPERATION**

See Section 3.11.3.1.

3.13.3 <3head>

❍ **PURPOSE**

To change DUT head configuration; to change the ATM head height; turn to turn the PISTON head ON and OFF.

❍ **PRINCIPLE**

PG9000 supports three different fluid head correction functions.

1. There is a correction to consider the difference in height between the PG9000 reference level and a device under test (see Section 3.11.7, PRINCIPLE). This head correction is referred to as DUT head. The head height can be adjusted by pressing **[HEAD]**. The head unit of measure and fluid are adjusted by pressing **[SPECIAL]** and selecting **<3head>**, **<1fluid>** and **<2unit>**.
2. The second head function is the head correction for the PG9000 reading of atmospheric pressure that is used to calculate air density and/or to add to atmospheric pressure in absolute by adding atmosphere mode. The barometer reading atmospheric pressure may not be at the same height as the piston reference level and, if so, a head correction is needed to determine atmospheric pressure at the piston reference level. This head correction is referred to as ATM head. The ATM head height can be edited by pressing **[SPECIAL]** and selecting **<3head>**,

© 1998-2010 Fluke Calibration

원문: Fluke Calibration PG9602/9607 메뉴얼(영문) · 제조사 원문 자료입니다. 사양은 제조사 사정에 따라 변경될 수 있습니다.

we measure, we calibrate, we validate.
㈜테솔 · www.tessol.com TS-TL-FLK-082 109 / 192
KOLAS 국제공인교정기관 · ISO/IEC 17025

TS-TL-FLK-082

<3atm>. The ATM head is only applied to internal or external barometer readings. It is not applied to normal or user values of atmospheric pressure.

3. The third head function is the automated correction for the piston position, referred to as PISTON head. The PG9000 reference level marked on the piston-cylinder module mounting post is the level at which pressures are defined when the piston is in midstroke position. But it may not always be practical to make measurement with the PG9000 piston exactly in its midstroke position. In fact, the piston position is *Ready* within a limit band above and below midstroke (see Section 3.4.1). As the piston moves away from midstroke, the pressure definition reference level moves proportionally. PG9000's automated correction for piston position calculates the head pressure corresponding to the deviation in piston position from midstroke and compensates the defined pressure back to midstroke. In this way, the defined pressure calculated by PG9000 is always the pressure at the reference level marked on the mounting post, even if the piston is not at midstroke position. The PISTON head function can be turned ON and OFF by pressing **[SPECIAL]** and selecting **<3head>**, **<4piston>**.

Note

See Section 7.2.2 for information on calculation of the three fluid head correction functions.

❍ **OPERATION**

To access various fluid HEAD correction functions press **[SPECIAL]**, and select **<3head>**. The display is:

```
Edit head: 1fluid
2unit 3atm 4piston
```

- Select **<1fluid>** to change the DUT head fluid (see Section 3.13.3.1).
- Select **<2unit>** to specify the DUT head height unit of measure (see Section 3.13.3.2).
- Select **<3atm>** to adjust the ATM head height (see Section 3.13.3.3).
- Select **<4piston>** to turn the PISTON head correction ON and OFF (see Section 3.13.3.4).

3.13.3.1 <3head>, <1fluid>

❍ **OPERATION**

- To specify the DUT head fluid (see Section 3.13.3, PRINCIPLE), press **[SPECIAL]** and select **<3head>**, **<1fluid>**. The display is:

```
Head fluid:
1gas 2liquid
```

- If **<1gas>** is selected, the display offers the choice of three gasses. Making a gas selection returns to the previous run screen with that gas active for the DUT head function. The display is:

```
Gas type:
1N2 2He 3Air
```

- If **<2liquid>** is selected, the display offers the choice of oil, water or a user defined liquid. If the user defined liquid is selected, its density must be specified. Making a liquid selection returns to the previous run screen with that liquid active for the DUT head function. The display is:

```
Liquid type:
1oil 2H20 3user
```

Note

In systems using fluid interfaces, the head fluid selected should be the medium used in the height separating the P9000 reference level from the device under test.

원문: Fluke Calibration PG9602/9607 메뉴얼(영문) · 제조사 원문 자료입니다. 사양은 제조사 사정에 따라 변경될 수 있습니다.

TESSOL Technical Library

TS-TL-FLK-082

we measure, we calibrate, we validate.
KOLAS 국제공인교정기관 · ISO/IEC 17025
㈜테솔 · www.tessol.com TS-TL-FLK-082 110 / 192

3.13.3.2 <3head>, <2unit>

❍ **OPERATION**

To specify the DUT and ATM head height unit (see Section 3.13.3, PRINCIPLE), press **[SPECIAL]** and select **<3head>**, **<2unit>**. The display is:

```
Head height unit:
1in 2cm
```

Selecting the desired unit returns to the previous run screen with that unit active for the DUT and ATM head function heights.

3.13.3.3 <3head>, <3atm>

❍ **OPERATION**

To specify the ATM head height (see Section 3.13.3, PRINCIPLE), press **[SPECIAL]** and select **<3head>**, **<3atm>**. The display is:

```
Edit ATM head unit:
-17.00 cm
```

Entering the ATM head returns to the previous run screen with the new height active.

The correct head height when using the PG9000 internal barometer is the distance from the reference level of the PG base to the mid line of the barometer in the Remote Electronics Module (see Section 3.12). If the Base and REM are on the same surface and the REM is horizontal, the distance is -17.0 cm (-6.70 in) for PG9607. These values are the default values of ATM head height.

Note

The ATM head height is negative if the barometer is below the PG9000 reference level and positive if the barometer is above the reference level. The ATM head fluid is air and it cannot be changed. The ATM head height unit is set by pressing [SPECIAL] and selecting <3head>, <2unit>. The default ATM head height is -17.0 cm, which is the difference in height between the PG9000 reference level and its internal barometer mounted on the PG9000 Platform rear panel.

3.13.3.4 <3head>, <4piston>

Note

PG9607 is a unique configuration of PG9000 that utilizes a floating cylinder with a stationary piston. This is in contrast with other PG9000 models that use a floating piston and a stationary cylinder. For consistency 'Piston' refers to the floating component on which mass is loaded in this and other noted sections.

❍ **OPERATION**

To turn the PISTON head correction function ON and OFF (see Section 3.13.3, PRINCIPLE), press **[SPECIAL]** and select **<3head>**, **<4piston>**.

Select **<1on>** to turn the PISTON head correction function ON so that a head correction for piston position IS automatically applied.

Select **<2off>** to turn the PISTON head correction function OFF so that a head correction for piston position IS NOT applied.

Note

The PISTON head is automatically turned OFF (has no effect) in gauge or differential measurement mode when the set pressure is zero (system vented or bypassed). When the system is vented or bypassed, the piston position no longer affects the head.

© 1998-2010 Fluke Calibration

원문: Fluke Calibration PG9602/9607 메뉴얼(영문) · 제조사 원문 자료입니다. 사양은 제조사 사정에 따라 변경될 수 있습니다.

TS-TL-FLK-082

we measure, we calibrate, we validate.
㈜테솔 · www.tessol.com TS-TL-FLK-082 111 / 192
KOLAS 국제공인교정기관 · ISO/IEC 17025

3.13.4 <4prefs>

❍ **PURPOSE**

To access a menu of PG9000 internal operational preferences and functions including screen saver, sounds, time and date, instrument ID and user protection levels.

❍ **OPERATION**

To access the PREFS menu press **[SPECIAL]**, and select **<4prefs>**. The display is:

```
1ScrSvr 2sound 3time
4ID 5level
```

Prefs menu choices include:

<1ScrSvr>: View and change the screen saver function (see Section 3.13.4.1).

<2sound>: View and change keypad press and piston position sound settings (see Section 3.13.4.2).

<3time>: View and edit the internal time and date settings (see Section 3.13.4.3).

<4ID>: View and edit the PG9000 user ID (see Section 3.13.4.4).

<5level>: View and edit user protection levels and password (see Section 3.13.4.5).

3.13.4.1 <4prefs>, <1ScrSvr>

❍ **PURPOSE**

To adjust the time of inactivity after which PG9000's SCREEN SAVER function activates or to turn off the screen saver function.

❍ **PRINCIPLE**

PG9000 has a SCREEN SAVER function which causes the display to dim after a front panel key is NOT pressed for a certain amount of time. The default time activates the screen saver after 10 minutes. The time can be adjusted by the user or screen saving can be disabled.

❍ **OPERATION**

To access the SCREEN SAVER function, press **[SPECIAL]** and select **<4prefs>**, **<1ScrSav>**. Edit the time, in minutes, after which the screen saver will activate to dim the screen. Set zero to disable the SCREEN SAVER function.

Note

Setting the screen saver time to zero disables the screen saver function so that the display remains permanently at full brightness.

3.13.4.2 <4prefs>, <2sound>

❍ **PURPOSE**

To adjust the key press sounds and turn piston position sounds ON and OFF.

❍ **PRINCIPLE**

PG9000 provides audible feedback of valid and invalid key presses and of when the piston leaves the high or low stop position (see Section 3.5). Key press sounds can be adjusted in frequency or turned OFF completely. Piston position sounds may be turned ON and OFF.

❍ **OPERATION**

To access the audible feedback adjustment function, press **[SPECIAL]** and select **<4prefs>**, **<2sound>**.

Select **<1keypad>** to adjust keypad sounds. Select **<2piston>** to turn the position sounds ON or OFF.

원문: Fluke Calibration PG9602/9607 메뉴얼(영문) · 제조사 원문 자료입니다. 사양은 제조사 사정에 따라 변경될 수 있습니다.

TS-TL-FLK-082

we measure, we calibrate, we validate.
㈜테솔 · www.tessol.com TS-TL-FLK-082 112 / 192
KOLAS 국제공인교정기관 · ISO/IEC 17025

3.13.4.3 <4prefs>, <3time>

❍ **PURPOSE**

To view and edit the PG9000 internal time and date settings.

❍ **OPERATION**

To access the time function press **[SPECIAL]** and select **<4prefs>**, **<3time>**. The display is:

```
Edit: 1time 2date
08:32:11 am 20060101
```

Select **<1time>** to edit the time. Edit hours, then minutes, then am/pm by pressing **[ENTER]** at each entry. Seconds go to zero when minutes are entered.

Select **<2date>** to edit the date. The date must be specified in YYYYMMDD format.

Note

The PG9000 date and time are set to United States Mountain Standard Time in the final test and inspection process at the factory. If desired, use the date function to set your local time and date.

3.13.4.4 <4prefs>, <4ID>

❍ **PURPOSE**

To view or edit the PG9000 user ID and to view the PG9000 serial number.

❍ **PRINCIPLE**

PG9000 has a factory programmed serial number that is included on the rear of the platform and can be viewed in the introductory screen.

PG9000 also allows the user to store one unique, twelve character, alpha numeric ID number. This feature is frequently used to assign an organizational control ID such as an asset number, tool number, standard number, etc. The ID function allows the ID number to be viewed and edited. It also displays the PG9000 factory serial number.

❍ **OPERATION**

To access the ID function press **[SPECIAL]** and select **<4prefs>**, **<4ID>**. Select **<1view>** to view the current ID.

Select **<2edit>** to edit the ID.

The ID has twelve characters. When the edit screen is opened, the cursor is on the first character. Numerical values can be entered directly from the keypad. In addition, the **[←]** and **[→]** keys can be used to toggle through a list of available alpha numeric characters. Holding the key steps through the characters. Character order going up (**[→]**) is: *blank space, symbols, lower case letters, upper case letters, numbers*. Press **[ENTER]** to select a character and move to the next character.

When a character is selected the cursor moves to the next character. To leave a blank character, press **[ENTER]** with the field for that character blank. Press **[ESCAPE]** when all ID characters have been entered to access the **<Save ID?>** option. Select **<1no>** to abandon edits and exit or select **<2yes>** to save the edited ID.

Note

The ID can be viewed and edited but it cannot be cleared or reset by any reset functions (see Section 3.13.9).

© 1998-2010 Fluke Calibration

원문: Fluke Calibration PG9602/9607 메뉴얼(영문) · 제조사 원문 자료입니다. 사양은 제조사 사정에 따라 변경될 수 있습니다.

TS-TL-FLK-082

we measure, we calibrate, we validate.
㈜테솔 · www.tessol.com TS-TL-FLK-082 113 / 192
KOLAS 국제공인교정기관 · ISO/IEC 17025

3.13.4.5 <4prefs>, <5level>

❍ PURPOSE

To set user protection levels that restrict access to certain functions and to edit the password required for changing User Levels.

❍ PRINCIPLE

PG9000's front panel user interface provides the means to access all PG9000 user defined data, settings and functions including calibration data. Inadvertent, uninformed or unauthorized altering or deleting of data, settings and functions could require extensive reconfiguration by the user and might cause invalid readings. For these reasons, depending upon the application in which PG9000 is being used, it may be desirable to restrict access to certain functions. The USER LEVEL function provides a means of restricting access to certain functions. Four different levels of security are available: none, low, medium and high.

Access to changing security levels can be left open, or be protected by a password so that security levels can be used as a convenient way to avoid accidental changing of data or as a secured means of preventing tampering with PG9000 settings.

The security levels are structured to support typical operating environments as follows:

None This level is intended for use only by the system manager and/or calibration facility. It allows access and editing in all areas including critical metrological information and other settings that affect measurement integrity.

Low Low security is designed to protect the specific metrological information and system diagnostic and maintenance functions of the system against accidental alteration. It is intended for an advanced operator performing many different tasks. Low security is the default User Level setting.

Medium Medium security is designed to protect specific metrological information in the system and to ensure that PG9000 is operated using consistent operational parameters.

High High security protects all operating parameters. It is intended to minimize operator choices (e.g., to perform repeated identical tests under consistent conditions).

⚠ Caution

- **PG9000 is delivered with the security level set to low to avoid inadvertent altering of critical internal settings but with unrestricted access to changing security level setting. It is recommended that the low security level be maintained at all times and password protection be implemented if control over setting of security levels is desired.**
- **If there is a risk of unauthorized changing of the security level, changing authority should be password protected (see OPERATION of this section).**
- **The High security level disables remote communications and returns an error message ("ERROR") to all remote commands. All other security levels have NO effect on remote communications.**

The security levels are structured to support typical levels of operation. Specifically, the security levels **prevent** execution of the functions in Table 17 marked by "●":

원문: Fluke Calibration PG9602/9607 메뉴얼(영문) · 제조사 원문 자료입니다. 사양은 제조사 사정에 따라 변경될 수 있습니다.

TS-TL-FLK-082

we measure, we calibrate, we validate.
㈜테솔 · www.tessol.com TS-TL-FLK-082 114 / 192
KOLAS 국제공인교정기관 · ISO/IEC 17025

Table 17. Security Levels - Functions **NOT** Executed Per Function/Level

FUNCTION	LOW	MEDIUM	HIGH
[P-C]			•
[UNIT]			•
[MODE]			•
[SYSTEM]			•
[AMBIENT]			•
[HEAD]		•	•
[ROTATE]			•
[GEN]			•
[RES] (change setting)		•	•
[P OR M]		•	•
[SETUP], <1select>		•	•
[SETUP], <2view>			•
[SETUP], <3edit>		•	•
[SPECIAL], <1PC/MS>, <any selection>, <1view>			•
[SPECIAL], <1PC/MS>, <any selection>, <2edit>	•	•	•
[SPECIAL], <1PC/MS>, <any selection>, <3add>	•	•	•
[SPECIAL], <1PC/MS>, <any selection>, <4delete>	•	•	•
[SPECIAL], <1PC/MS>, <1PC>, <5select>			•
[SPECIAL], <1PC/MS>, <2mass set>, <5select>		•	•
[SPECIAL], <1PC/MS>, <2mass bell>, <5select>		•	•
[SPECIAL], <2presU>		•	•
[SPECIAL], <3head>		•	•
[SPECIAL], <4prefs>		•	•
[SPECIAL], <4prefs>, <3time> (make changes)	•	•	•
[SPECIAL], <4prefs>, <4ID>, <2edit>	•	•	•
[SPECIAL], <6remote> (access)			•
[SPECIAL], <6remote> (make changes)		•	•
[SPECIAL], <5prefs>, <3time> (make changes)	•	•	•
[SPECIAL], <6gl> (access)	•	•	•
[SPECIAL], <7cal>, (access)			•
[SPECIAL], <7cal>, <any selection except 5Pposition>, <2cal>	•	•	•
[SPEICAL], <8AMH>, <any selection>		•	•
[SPECIAL], <9reset>		•	•
[SPECIAL], <9reset>, <1sets>	•	•	•
[SPECIAL], <9reset>, <3com>	•	•	•
[SPECIAL], <9reset>, <4cal>	•	•	•
[SPECIAL], <9reset>, <5setups>	•	•	•
[SPECIAL], <9reset>, <6all>	•	•	•
Remote communications disabled			•

© 1998-2010 Fluke Calibration

원문: Fluke Calibration PG9602/9607 메뉴얼(영문) · 제조사 원문 자료입니다. 사양은 제조사 사정에 따라 변경될 수 있습니다.

we measure, we calibrate, we validate.
KOLAS 국제공인교정기관 · ISO/IEC 17025

❍ **OPERATION**

Note

PG9000 is delivered with NO active password so access to the User Level menu is open. The User Level is set to <1Low>. User Levels can be changed freely until a password has been created. Reset functions (see Section 3.13.9) do not affect the password setting.

To access the User Level function, press **[SPECIAL]** and select **<2level>**.

If NO password yet exists or if the correct password has been entered, the display is:

```
1change user level
2edit password
```

Selecting **<1change user level>** brings up the restriction menu:

```
Restriction: 1none
2low 3medium 4high
```

You can then select the current restriction level, or press **[ESCAPE]** to return to the main run screen.

Selecting **<2edit password>** displays the user password and allows it to be edited. Passwords can be up to six numbers in length and cannot start with a zero.

```
Password: pppppp
0 disables password
```

If **0** is entered as the password value, then the password is made inactive and a password will NOT be required to access the User Level menu. This is the factory default with a security level of **<2low>**.

⚠Caution

Once a password has been entered, the User Level cannot be changed without reentering the password.

If there is an active password, the PG9000 password entry screen appears.

```
PG9000 NS nnn-xx
Password: pppppp
```

The user must enter the user defined password or the factory **secondary** password to proceed. When a password is entered correctly, operation proceeds to the **<1change user level 2edit password>** screen.

The first field, ***<nnnn>,*** is the serial number of PG9000, followed by a second field, ***<xx>.*** That counts the number of times that a **secondary** password has been used. This second field increments each time a **secondary** password is used. The third field, ***<pppppp>***, is for standard password entry.

The factory ***secondary*** password is available in case the user's password has been misplaced or forgotten. It can be obtained by contacting a **Fluke Calibration** Authorized Service Provider. The factory ***secondary*** password is different for all PG9000's and changes each time it is used.

3.13.5 <5remote>

❍ **PURPOSE**

To configure the PG9000 COM1, COM2, COM3, COM4 and IEEE-488 communication ports. To test COM1, COM2, COM3 and COM4 communications.

원문: Fluke Calibration PG9602/9607 메뉴얼(영문) · 제조사 원문 자료입니다. 사양은 제조사 사정에 따라 변경될 수 있습니다.

TS-TL-FLK-082

we measure, we calibrate, we validate.
㈜테솔 · www.tessol.com TS-TL-FLK-082 116 / 192
KOLAS 국제공인교정기관 · ISO/IEC 17025

❍ **PRINCIPLE**

PG9000 has four RS232 communications ports referred to as COM1, COM2, COM3 and COM4 and a single IEEE-488 port. COM1 and the IEEE-488 port are for communicating with a host computer (see Section 0). COM2 is for communicating with an external barometer and/or vacuum gauge (see Section 3.13.5.4, 3.13.5.5) or for pass through commands to an RS232 device. COM3 is reserved for communications with an automated pressure generation/control component, COM4 is reserved for future use. The communication ports can be set up from the PG9000 front panel.

PG9000 provides a self-test for its RS232 communication ports. The self-test allows verification that the PG9000 RS232 ports (COM1, COM2, COM3, COM4) are operating properly and that a valid interface cable is being used. (see Section 3.13.5.3)

❍ **OPERATION**

To access the port communications settings, press **[SPECIAL]** and select **<5remote>**. Select **<1COM1>**, **<2COM2>**, **<3COM3>, <4COM4>** or **<5IEEE-488>** to view and edit that port's communications settings (see Section 4.2.1 for information on COM port settings). Selecting **<2COM2>** includes the choice to set up external barometer communications as well as the port's communications settings. Select **<1settings>** to view and edit COM2 communications settings. Select **<2baro>** to view and edit external barometer communications settings (see Section 3.13.5.4).

To access the RS232 self-test press **[SPECIAL]**, **<5remote>**, **<5RS232test>**.

3.13.5.1 COM1, COM2, COM3 and COM4 (RS232)

The COMx ports can be set for the specific settings required by the user. The settings are baud rate, parity, data bits and stop bits. The available options are found in Table 18. **COM1, COM2, COM3 and COM4 Available Settings**.

Table 18. COM1, COM2, COM3 and COM4 Available Settings

BAUD RATE	300, 600, 1 200, 2 400, 4 800, 9 600, 19 200
PARITY	NONE, ODD or EVEN
DATA BITS	7 or 8
STOP BITS	1 or 2
TERMINATORS	<CR><LF> or <LF><CR>

The default COMx settings are **2400, E, 7,1, <CR><LF>** or **<LF><CR>** for all three COM ports.

PG9000 appends a carriage return (**<CR>**) and a line feed (**<LF>**) or **<LF><CR>** to all messages that are sent out of the COM1 port to the host. It looks for a carriage return to terminate incoming messages and ignores line feeds.

Note

The user MUST wait for a reply to each message sent to PG9000 before sending another message to it (see Section 4.3).

3.13.5.2 IEEE-488

The IEEE-488 port address can be defined from 1 to 31. The default address is **10**.

PG9000 sends a line feed (**<LF>**) and asserts the EOI line at the end of all transmitted messages. It looks for a line feed and/or assertion of the EOI line to terminate incoming messages.

© 1998-2010 Fluke Calibration

원문: Fluke Calibration PG9602/9607 메뉴얼(영문) · 제조사 원문 자료입니다. 사양은 제조사 사정에 따라 변경될 수 있습니다.

TS-TL-FLK-082

we measure, we calibrate, we validate.
㈜테솔 · www.tessol.com TS-TL-FLK-082 117 / 192
KOLAS 국제공인교정기관 · ISO/IEC 17025

3.13.5.3 RS232 Self Test

The RS232 self-test is provided to check the PG9000 COM ports and the interface cable independently of an external device or computer.

If there is difficulty communicating with PG9000 from a host computer using RS232, the RS232 self test can help establish that the PG9000 COM1 port and the interface cable are good.

To run a self test of a pair of RS232 ports (COM1 and COM2, COM1 and COM3 or COM1 and COM4), press **[SPECIAL]** and select **<5remote>**, **<5RS232test>**. Then select **<1COM2>** to test COM1 and COM2 or **<2COM3>** to test COM1 and COM3 or **<3COM4>** to test COM1 and COM4.

The display prompts you to connect COM1 to COM2, COM1 to COM3 or COM1 and COM4 using a standard pin-to-pin DB-9F to DB-9M RS232 cable (see Section 4.2.1).

Once the cable has been installed, press **[ENTER]** to run the self-test. The test is first executed in the COM1→COM2/3/4 direction and then in the COM2/3/4→COM1 direction.

If the COM1→COM2 (or COM3/4) test passes: <PASSED> displays briefly and the test proceeds to COM2/3/4 →COM1.

If COM2/3/4→COM1 passes: <PASSED> is displayed briefly followed by the conclusion, <PG9000 RS232 test has PASSED>.

If a test fails: Execution is suspended until **[ENTER]** is pressed.

Note

The PG9000 RS232 test can fail for two reasons:

1. **The RS232 cable being used is incorrect (see Section 4.2.1, for information on the correct cable). An incorrect or faulty cable will fail on all of the ports when testing.**
2. **One of the COM ports is defective.**

The reason for failed communications is almost always a cable or incorrect RS232 interface settings. Be sure that these are correct before concluding that a COM port is defective.

3.13.5.4 External Barometer (RPM) Communications (COM2)

❍ **PURPOSE**

To set up communications with an external barometer from which PG9000 will read the value of atmospheric pressure used in its internal calculations. The external device is also used for reading the static pressure when PG9000 is used in differential mode (see Section 3.11.4.1).

Note

The source of the values of atmospheric pressure used by PG9000 in its internal calculations is determined by the AtmP setting in the current SETUP file (see Section 3.12). Setting up communications with an external barometer does NOT set PG9000 to utilize the external barometer.

❍ **PRINCIPLE**

PG9000 uses atmospheric pressure values in its calculations of defined pressure (see Section 7.2). The source of the value is determined by the AtmP setting in the current SETUP file (see Section 3.10). One of the possible sources is *COM2*, which allows an external barometer, connected to PG9000's COM2 RS232 port to be read automatically to obtain the atmospheric pressure values that are used. In order to communicate with an the external barometer PG9000's

원문: Fluke Calibration PG9602/9607 메뉴얼(영문) · 제조사 원문 자료입니다. 사양은 제조사 사정에 따라 변경될 수 있습니다.

TS-TL-FLK-082

we measure, we calibrate, we validate. ㈜테솔 · www.tessol.com TS-TL-FLK-082 118 / 192

KOLAS 국제공인교정기관 · ISO/IEC 17025

COM2 must be properly set up. This setup occurs by pressing **[SPECIAL]** and selecting **<5remote>**, **<2COM2>**, **<2baro>**.

❍ **OPERATION**

To set up PG9000's COM2 port to communicate with an external barometer, press **[SPECIAL]** and select **<5remote>**, **<2COM2>**, **<2baro>**. Select **<1RPMx>** if the external barometer is a **DH Intruments** RPM. Select **<2user>** to set up communications with a barometer other than a **DH Intruments** RPM.

Setting Up for User Barometer Communications

Note

For a remote barometer to be able to be used for automated atmospheric pressure readings on PG9000 COM2, the following requirements apply to the remote barometer's communications:

- **Replies to a request to send string within 2 seconds.**
- **Accepts <CR, LF> terminators.**
- **Supplies <CR> or <CR, LF> terminators.**
- **Request to send string must be printable alphanumeric (no control modes or nulls).**

After pressing **[SPECIAL]** and selecting **<5remote>**, **<2COM2>**, **<2baro>**, **<2user>**, the display is:

```
COM2 meas req string
```

The string value is entered on the second line. It may have up to 20 characters. When the string screen is opened, the cursor is on the first character. Numerical values can be entered directly from the keypad. In addition, the **[←]** and **[→]** keys can be used to toggle through a list of available alpha numeric characters. Holding the key steps through the characters. Character order going up (**[→]**) is: *blank space, symbols, lower case letters, upper case letters, numbers*. Press **[ENTER]** to select a character and move to the next character. When a character is selected the cursor moves to the next character. To leave a character blank, press **[ENTER]** with the field for that character blank. After the last character has been entered, press **[ESCAPE]**. This causes a **<Save edits?>** screen to appear. Select **<2yes>** to save the edited string and move to the next screen. Select **<1no>** abandon the edits. Also, if **[ENTER]** is pressed on the 20th character, the string is saved automatically and operation advances to the next screen.

Note

The external barometer parameters including the communication string can also be set by remote command, which is more convenient than front panel entry (see Section 4.3.4.2, "UDD" command).

After the string value has been entered the display is:

```
Reply conv coef:
1.000000 Pa/unit
```

<conv coef> is the conversion coefficient that PG9000 will use to convert readings from the external barometer to the pressure unit of measure Pascal **[Pa]**. If the readings from the external barometer are NOT Pascal, edit the conversion coefficient value as needed to convert the readings to Pascal.

When the conversion coefficient is entered the next setup screen is opened. The display is:

```
Leading characters to
Strip: 0
```

This entry specifies the leading characters in the return string that precede the numerical value of the pressure. PG9000 will strip the specified number of

© 1998-2010 Fluke Calibration

원문: Fluke Calibration PG9602/9607 메뉴얼(영문) · 제조사 원문 자료입니다. 사양은 제조사 사정에 따라 변경될 수 있습니다.

we measure, we calibrate, we validate.
㈜테솔 · www.tessol.com TS-TL-FLK-082 119 / 192
KOLAS 국제공인교정기관 · ISO/IEC 17025

TS-TL-FLK-082

characters from the front of the return string and assume that the next character is the first number defining the current value of atmospheric pressure.

To verify whether external barometer communications have been set up properly, select a SETUP file that specifies COM2 under AtmP (see Section 3.12) and verify that communications with the external barometer are achieved. Then view current barometer readings in the AMBIENT run screen (see Section 3.11.6) and verify that the readings are correct. Note that a fluid head correction should be set if the external barometer is not at the PG9000 reference level. This correction may cause the reading of the external barometer and the value of ambient pressure indicated by the PG9000 to not be identical (see Section 3.13.3.3).

Note

For communications with an external barometer on COM2 to be established properly, the inquiry string to send to the barometer must be defined following this section and the PG9000 COM2 port and barometer COM port must have the same communications settings. Press [SPECIAL] and select <5remote>, <2COM2>, <1settings> to set up PG9000 COM2 communications settings. When unable to establish communications between COM2 and the external barometer, consider using the PG9000 RS232 self test to verify COM2 operation (see Section 3.13.5.3). If both a barometer and a vacuum gauge are connected, the barometer must be an RPM3 or RPM4 and must always be the first device connected to the PG9000 Platform COM2.

3.13.5.5 External Vacuum Gauge Communications (COM2)

❍ **PURPOSE**

To set up communications with an external vacuum gauge from which PG9000 will read the value of reference vacuum under the bell jar used in the calculation of absolute pressure in absolute by vacuum measurement mode (see Section 3.11.4).

Note

The source of the value of vacuum pressure used by PG9000 in its internal calculations is determined by the Vac setting in the current SETUP file (see Section 3.12. Setting up communications with an external vacuum gauge does NOT set PG9000 to utilize the external vacuum gauge.

❍ **PRINCIPLE**

PG9000 uses a value of reference vacuum under the bell jar in its calculation of the pressure defined by the PG in absolute by vacuum measurement mode (see Section 7.2). The source of the value is determined by the Vac setting in the current SETUP file (see Section 3.12). The standard souce of this value is *COM2*, which allows an vacuum gauge connected to PG9000's COM2 RS232 port to be read automatically to obtain the reference vacuum values that are used. In order to communicate with the external vacuum gauge, PG9000's COM2 must be properly set up. This setup occurs by pressing **[SPECIAL]** and selecting **<5remote>**, **<2COM2>**, **<3vac>**.

Note

If a DH Intruments RPM is being used on COM2 for external measurement of barometric pressure, the vacuum gauge may be connected to COM2 of the RPM. In this case, COM2 of the RPM barometer must be set to have the same communication settings as the external vacuum gauge. If both a barometer and a vacuum gauge are connected, the barometer must always be the first device connected to the PG9000 Platform COM2.

원문: Fluke Calibration PG9602/9607 메뉴얼(영문) · 제조사 원문 자료입니다. 사양은 제조사 사정에 따라 변경될 수 있습니다.

TS-TL-FLK-082

we measure, we calibrate, we validate.
㈜테솔 · www.tessol.com TS-TL-FLK-082 120 / 192
KOLAS 국제공인교정기관 · ISO/IEC 17025

❍ OPERATION

To set up or verify PG9000's COM2 port to communicate with an external vacuum gauge, press **[SPECIAL]** and select **<5remote>**, **<2COM2>**, **<3vac>**. Select **<1RPMx>** if the external vacuum gauge is a DH Intruments RPM. Select **<2user>** to set up communications with a vacuum gauge other than a **DH Intruments** RPM. Select **<3dflts>** to set COM2 settings, measurement request string and conversion coefficient to support the standard vacuum gauge supplied with the PG9000 vacuum reference hardware (see Section 2.1.2.4 and below).

Setting Up for User Vacuum Gauge Communications

Note

For an external vacuum gauge to be able to be used for automated reference vacuum readings on PG7601 COM2 or a DH Intruments RPM's COM2, the following requirements apply to the remote vacuum gauge's communications:

- **Replies to a request to send string within 2 seconds.**
- **Accepts <CR, LF> terminators.**
- **Supplies <CR> or <CR, LF> terminators.**
- **Request to send string must be printable alphanumeric (no control modes or nulls).**

After pressing **[SPECIAL]** and selecting **<5remote>**, **<2COM2>**, **<3vac>**, **<2user>**, the display is:

```
COM2 meas req string
```

The measurement request string value is entered on the second line. It may have up to 20 characters.

When the string screen is opened, the cursor is on the first character. Numerical values can be entered directly from the keypad. In addition, the **[←]** and **[→]** keys can be used to toggle through a list of available alpha numeric characters. Holding the key steps through the characters. Character order going up (**[→]**) is: *blank space, symbols, lower case letters, upper case letters, numbers*. Press **[ENTER]** to select a character and move to the next character. When a character is selected the cursor moves to the next character. To leave a character blank, press **[ENTER]** with the field for that character blank. After the last character has been entered, press **[ESCAPE]**. This causes a **<Save edits?>** screen to appear. Select **<2yes>** to save the edited string and move to the next screen. Select **<1no>** abandon the edits. Also, if **[ENTER]** is pressed on the 20th character, the string is saved automatically and operation advances to the next screen.

Note

The external vacuum gauge parameters including the communication string can also be set by remote command which is more convenient than front panel entry (see Section 4.3.4.2, "UDV" command). By default the external vacuum gauge parameters are preset to match the standard external vacuum gauge supplied with the PG9000 vacuum reference hardware (see Section 2.1.2.4).

After the string value has been entered the display is:

```
Reply conv coef:
1.000000 Pa/unit
```

<conv coef> is the conversion coefficient that PG7600 will use to convert readings from the external vacuum gauge to the pressure unit of measure Pascal **[Pa]**. If the readings from the external vacuum gauge are NOT Pascal, edit the conversion coefficient value as needed to convert the readings to Pascal.

© 1998-2010 Fluke Calibration

원문: Fluke Calibration PG9602/9607 메뉴얼(영문) · 제조사 원문 자료입니다. 사양은 제조사 사정에 따라 변경될 수 있습니다.

TS-TL-FLK-082

we measure, we calibrate, we validate.
㈜테솔 · www.tessol.com TS-TL-FLK-082 121 / 192
KOLAS 국제공인교정기관 · ISO/IEC 17025

When the conversion coefficient is entered the next setup screen is opened. The display is:

```
Leading characters to
Strip: 0
```

This entry specifies the leading characters in the return string that precede the numerical value of the pressure. PG9000 will strip the specified number of characters from the front of the return string and assume that the next character is the first number defining the current value of reference vacuum.

To verify whether external vacuum gauge communications have been set up properly, select a SETUP file that specifies COM2 under Vac (see Section 3.12) and verify that communications with the external vacuum gauge are achieved. Then view current vacuum readings in the AMBIENT run screen (see Section 3.11.6) and verify that the readings are correct. If the external vacuum gauge is not connected or not responding, "-TO-" will be indicated in the AMBIENT run screen instead of a vacuum measurement. If the reply is not as expected, then "INVD" will be indicated.

Note

- **For communications with an external vacuum gauge on COM2 to be established properly, the inquiry string to send to the vacuum gauge must be defined following this section and the PG9000 COM2 port and vacuum gauge COM port must have the same communications settings (or if the vacuum gauge is connected to COM2 of a DH Intruments RPM, the RPM COM2 and vacuum gauge COM port must have the same communication settings. Press [SPECIAL] and select <5remote>, <2COM2>, <1settings> to set up PG9000 COM2 communications settings. When unable to establish communications between COM2 and the external vacuum gauge, consider using the PG9000 RS232 self test to verify COM2 operation (see Section 3.13.5.3).**
- **Selecting [SPECIAL], <5remote>, <2COM2>, <3vac>, <3dflts> sets COM2 settings, measurement request string and conversion coefficient to support the standard vacuum gauge supplied with the PG9000 vacuum reference hardware (see Section 2.1.2.4).**

  COM2 settings: 9600, N,8,1

  Measurement request string: p

  Conversion coefficient: 1

  Leading characters to strip: 0

3.13.6 <6gl>

❍ PURPOSE

To view and set the value of local gravity used by PG9000 in reference pressure calculations (see Section 7.2) when *gl* is specified as the gravity value in SETTINGS (see Section 3.12).

❍ OPERATION

To access the PG9000 local gravity value (gl), press **[SPECIAL]** and select **<6gl>**. The display is:

```
Local gravity:
9.806650 m/s2
```

The value displayed is the PG9000 local gravity value. This value can be edited unless it is protected by the current security level. The default value is normal gravity of 9.806650 m/s^2.

원문: Fluke Calibration PG9602/9607 메뉴얼(영문) · 제조사 원문 자료입니다. 사양은 제조사 사정에 따라 변경될 수 있습니다.

we measure, we calibrate, we validate.
㈜테솔 · www.tessol.com TS-TL-FLK-082 122 / 192
KOLAS 국제공인교정기관 · ISO/IEC 17025

TS-TL-FLK-082

Note

The local gravity (gl) value may or may not be used by PG9000 in its calculations of defined pressure. Whether gl or another value, such as normal gravity, is used is determined by the current SETUP file (see Section 3.12), not by what is entered by pressing [SPECIAL] and selecting <6gl>.

3.13.7 <7cal>

PURPOSE

To view the output of and adjust or calibrate PG9000's internal sensors and measurement systems including:

Barometric pressure	Ambient relative humidity
Ambient temperature	Piston-cylinder module temperature
Vacuum	Piston position
Piston rotation rate	

Note

In normal operation, the measurements made by PG9000s internal sensors can be viewed in the SYSTEM and AMBIENT run screens by pressing [SYSTEM] or [AMBIENT] (see Sections 3.11.5 and 3.11.6).

PRINCIPLE/OPERATION

PG9000 internal sensor adjustment functions are considered part of PG9000 maintenance and are covered in the maintenance section of this manual (see Section 5).

3.13.8 <8AMH>

PURPOSE

Control optional AMH automated mass handling system directly and view its status (see Section 3.7).

PRINCIPLE

An optional automated mass handling system is available for PG9000 Platforms. AMH-100-VAC operates in either atmospheric reference (gauge or absolute by ATM) or vacuum reference (absolute by vac or differential) modes (see Section 3.11.4).

Operation of the AMH is integrated into PG9000 Platform operation so that mass handling occurs automatically when necessary. **[SPECIAL]**, **<8AMH>** accesses functions to view the current mass loading status, load all masses, unloaded all masses and load specific masses.

OPERATION

To access the AMH status and control functions, an AMH automated mass handler must already be initialized by selecting an AMH type mass set (see Section 3.13.1.10). To access the AMH status and control functions, press **[SPECIAL]**, **<8AMH>**.

Select **<1status>** for a display of the current loaded/not loaded status of AMH masses (the indication is the same as the discreet control function screen in Section 3.13.8.2).

Select **<2control>** to control AMH directly:

Select **<1up/down>** to move the AMH mass handler up or down (see Section 3.13.8.1).

Select **<2discreet>** to specify masses to be loaded and unloaded (see Section 3.13.8.2).

Select **<3loadall>** to load all the AMH masses onto the piston (see Section 3.13.8.3).

Select **<4unloadall>** to unload all the AMH masses from the piston (see Section 3.13.8.4).

© 1998-2010 Fluke Calibration

원문: Fluke Calibration PG9602/9607 메뉴얼(영문) · 제조사 원문 자료입니다. 사양은 제조사 사정에 따라 변경될 수 있습니다.

TS-TL-FLK-082

we measure, we calibrate, we validate.
㈜테솔 · www.tessol.com TS-TL-FLK-082 123 / 192
KOLAS 국제공인교정기관 · ISO/IEC 17025

3.13.8.1 <2control>, <1up/down>

❍ **PURPOSE**

To move the AMH mass load to the up or down position (see Section 3.7.1).

❍ **OPERATION**

To move the AMH mass handler to the up and down positions, press **[SPECIAL]**, **<8AMH>**, **<1up/down>**.

The display indicates the current position. Press **[ENTER]** to change the position.

⚠ Warning

Do not put fingers or anything else under the AMH trim mass tray. When the mass load is lowered, it will pinch or crush anything under it.

3.13.8.2 <2control>, <2discreet>

❍ **PURPOSE**

To load and unload specific AMH masses.

❍ **OPERATION**

To load and unload specific AMH masses, press **[SPECIAL]**, **<8AMH>**, **<2control>**, **<2discreet>**.

The display is:

```
1* 2  4* 8  16  32
64  Main:1
```

The **<1>**, **<2>**, **<4>**, **<8>**, **<16>**, **<32>** and **<64>** indicate the 0.1, 0.2, 0.4, 0.8, 1.6, 3.2 and 6.4 kg masses. **<*>** indicates that the mass is loaded. Move the cursor to a mass and press **[+/-]** or **[.]** to change its status.

<Main:> indicates the number of main masses that are loaded. Edit this number to the desired value.

If any condition in the discreet display is changed the bottom right of the display changes to **<ENT loads>**. Press **[ENTER]** to causes AMH to operate to load the new mass configuration. Press **[ESCAPE]** to return to the AMH menu with no change in mass load.

⚠ Warning

Do not put fingers or anything else under the AMH trim mass tray. When the mass load is lowered, it will pinch or crush anything under it.

3.13.8.3 <2control>, <3loadall>

❍ **PURPOSE**

To clear the AMH mass handler and cause all the masses in the AMH mass set to be loaded onto the piston. The function is used to remove all the masses from the AMH mass handler and prepare it to be removed or installed on the PG9000 platform.

❍ **OPERATION**

To load all AMH masses, press **[SPECIAL]**, **<8AMH>**, **<3loadall>**. Confirm the load all instruction and AMH proceeds to lower all the masses onto the piston.

⚠ Warning

Do not put fingers or anything else under the AMH trim mass tray. When the mass load is lowered, it will pinch or crush anything under it.

원문: Fluke Calibration PG9602/9607 메뉴얼(영문) · 제조사 원문 자료입니다. 사양은 제조사 사정에 따라 변경될 수 있습니다.

3.13.8.4 <2control>, <4unloadall>

❍ **PURPOSE**

To clear the AMH mass handler and cause all the masses in the AMH mass set to be unloaded from the piston (retained in the AMH automated mass hander).

❍ **OPERATION**

To unload all AMH masses, press **[SPECIAL], <8AMH>, <4unloadall>**. Confirm the unload all instruction and AMH proceeds to raise all the masses off the piston. When the mass handler lowers, the bell and mass lifting shaft are still loaded on the piston.

⚠ Warning

Do not put fingers or anything else under the AMH trim mass tray. When the mass load is lowered, it will pinch or crush anything under it.

3.13.9 <9reset>

❍ **PURPOSE**

To reset various PG9000 settings to default or factory values.

PG9000 stores its user definable settings in non-volatile memory. The reset menu allows the user to selectively or completely reset these settings to factory defaults. Resets clear settings that the user may have made, and should be used only to restore the PG9000 to a known state. PG9000 will go through its reboot routine after any type of reset is executed.

❍ **OPERATION**

To access the reset choices press **[SPECIAL]** and select **<9reset>**. The display is:

```
1sets 2units 3com
4cal 5setups 6all
```

Select the desired reset. After confirmation, the reset occurs. A reset always puts PG9000 through its start up routine as if power had been turned OFF and back ON.

See Sections 3.11.9.1 through 3.11.9.6 for detailed information on the specific reset choices.

⚠ Caution

Reset functions change user settings that affect pressure measurement. If not used properly, resetting can cause out of tolerance measurements. Reset functions should only be used by qualified personnel with reference to this manual for information on the reset functions.

3.13.9.1 <9reset>, <1sets>

❍ **PURPOSE/OPERATION**

To access Reset - Sets, press **[SPECIAL]** and select **<1reset>**, **<1sets>**.

Reset - Sets clears and sets to default the user settings. This includes:

- Pressure unit of measure to pressure unit #1 of **[UNIT]** (see Section 3.11.3).
- Measurement mode to gauge (see Section 3.11.4).
- DUT head height to zero and ATM head height to default (see Sections 3.11.7, 3.13.3.3).
- DUT head height units to centimeters (see Section 3.13.3.2).
- PISTON head correction ON (see Section 3.13.3.4).
- Set up file to #1 (see Section 3.12).
- Active piston-cylinder module, mass set and mass loading bell to #1 (first in list) (see Sections 3.13.1.5, 3.13.1.10, 3.13.1.15).
- Mass loading resolution to 0.01 g (see Section 3.11.10).

© 1998-2010 Fluke Calibration

원문: Fluke Calibration PG9602/9607 메뉴얼(영문) · 제조사 원문 자료입니다. 사양은 제조사 사정에 따라 변경될 수 있습니다.

TS-TL-FLK-082

we measure, we calibrate, we validate.
KOLAS 국제공인교정기관 · ISO/IEC 17025
㈜테솔 · www.tessol.com TS-TL-FLK-082 125 / 192

- Automatic rotation off (see Section 3.11.8).
- Automatic rotation pre-decel on (see Section 3.11.8.1).
- Automatic pressure generation off (see Section 3.11.9).
- Automatic pressure generation controller raise function to OFF (see Section 3.11.9.2).
- Automatic pressure generation controller tolerance to 0.05% of full scale (see Section 3.11.9.4).
- Automatic pressure generation controller refloat function to ON (see Section 3.11.9.5).
- Mode to *pressure to mass* (see Section 3.11.12).
- Screen saver to 10 minutes (see Section 3.13.4.1).
- PC sounds to ON and keyboard sounds to medium frequency (see Section 3.13.4.2).

3.13.9.2 <9reset>, <2units>

❍ PURPOSE/OPERATION

To access Reset - Units, press **[SPECIAL]** and select **<1reset>**, **<2units>**.

Reset - Units clears and sets to default all unit of measure functions. This includes:

- **[UNIT]** pressure unit of measure selections to defaults and active unit to #1 (see Section 3.11.3).
- Sets the user pressure unit coefficient to 1.00/Pa (see Section 3.11.3.1).

3.13.9.3 <9reset>, <3com>

❍ OPERATION/PURPOSE

To access Reset - Com, press **[SPECIAL]** and select **<1reset>**, **<3com>**.

Reset - Com clears and sets to default the PG9000 communications ports (see Section 3.11.5). This includes:

COM1, COM3 and COM4	
Baud Rate	2 400
Parity	Even
Data Bits	7
Stop Bits	1
Terminating Characters	<CR>, <LF>
COM2	
Baud Rate	9 600
Parity	None
Data Bits	8
Stop Bits	1
Terminating Characters	<CR>, <LF>
IEEE-488 (GPIB)	
Address	10
Terminating Characters	<CR>, <LF>
COM2 User Barometer Inquiry String and Characters	see Section 3.13.5.4
COM2 Vacuum Gauge Inquiry String and Characters	see Section 3.13.5.5

3.13.9.4 <9reset>, <4cal>

❍ OPERATION/PURPOSE

⚠ Caution

Use special caution with this reset as critical calibration data may be altered.

원문: Fluke Calibration PG9602/9607 메뉴얼(영문) · 제조사 원문 자료입니다. 사양은 제조사 사정에 따라 변경될 수 있습니다.

TS-TL-FLK-082

we measure, we calibrate, we validate.
㈜테솔 · www.tessol.com TS-TL-FLK-082 126 / 192
KOLAS 국제공인교정기관 · ISO/IEC 17025

To access Reset - Cal, press **[SPECIAL]** and select **<1reset>**, **<4cal>**.

Reset - Cal DOES NOT reset piston-cylinder module, mass set and mass bell files. There is no user available reset for them.

Reset - Cal clears and sets to default the user calibration coefficients for PG9000 on-board sensors (see Section 5.2.1). This includes:

Barometric Sensor

Adder	0
Multiplier	1
Calibration Date	20000101

Humidity Sensor

Adder	0
Multiplier	1
Calibration Date	20000101

Ambient Temperature Sensor

Adder	0
Multiplier	1
Calibration Date	20000101

Piston-Cylinder Module Temperature Sensor

RZ	100.000 Ω
Slope	0.3896
Calibration Date	20000101

Vacuum Gauge

Adder	0
Multiplier	1
Calibration Date	20000101

Note

Reset - Cal has NO effect on the reference resistance values used to calibrate PG9000s internal ohmic measurement system (see Section 5.2.1.5).

3.13.9.5 <9reset>, <5setups>

To access Reset - Setups, press **[SPECIAL]** and select **<1reset>**, **<5setups>**.

Reset - Setups deletes all SETUP files and selects SETUP file #1 as the active SETUP file (see Section 3.12).

3.13.9.6 <9reset>, <6all>

❍ **OPERATION/PURPOSE**

To return PG9000 to the original, as delivered, factory condition.

To access Reset - All, press **[SPECIAL]** and select **<1reset>**, **<6all>**.

- Performs the functions of the Sets, Units, Cal and Com resets (see Sections 3.13.9.1 to 3.13.9.5).
- User security level to low, but does not affect the User Level password (see Section 3.13.4.5).
- Local gravity to 9.80665 m/s^2 (see Section 3.13.6)

© 1998-2010 Fluke Calibration

원문: Fluke Calibration PG9602/9607 메뉴얼(영문) · 제조사 원문 자료입니다. 사양은 제조사 사정에 따라 변경될 수 있습니다.

we measure, we calibrate, we validate.
㈜테솔 · www.tessol.com TS-TL-FLK-082 127 / 192
KOLAS 국제공인교정기관 · ISO/IEC 17025

TESSOL Technical Library
TS-TL-FLK-082

Notes

원문: Fluke Calibration PG9602/9607 메뉴얼(영문) · 제조사 원문 자료입니다. 사양은 제조사 사정에 따라 변경될 수 있습니다.

4. Remote Operation

4.1 Overview

Most of the PG9000 Terminal's front panel functions can also be executed by commands from a remote computer. The host computer can communicate with PG9000 using the COM1 RS232 port or the IEEE-488 port located on the PG9000 Remote Electronics Module (REM) rear panel. The command syntax is the same for either port except when using the IEEE STD. 488.2 Common commands.

4.2 Interfacing

Sending a command to PG9000 places it in remote mode. The function keys on the front panel are locked-out, except for the **[SYSTEM]** and **[AMBIENT]** keys which still respond to allow the user to change the data displayed. Pressing the **[ESC]** key returns PG9000 to local mode unless the "REMOTE" command was sent which locks out keypad operation until the "LOCAL" command is sent.

Most remote commands return a reply within 500 ms. The following commands may query external devices connected to PG9000's COM2 and/or COM3 ports and can take up to 5 to 10 seconds to reply:

"MASS=" (possible communications with an external AMH mass handler)
"PGEN=" (requires communications with an external pressure controller)
"SETUP=" (possible communications with external barometer or vacuum gauge)
"AMHLOAD=" (possible delay while AHM completes the action)

You **must** wait for this reply before issuing another command to PG9000. This ensures that PG9000 has completed the command. An exception is the use of any of the IEEE STD. 488.2 Common Commands (see Section 4.3.4.1) via the IEEE-488 interface (common commands all start with an asterisk, "*"). The common commands only generate a reply if using the COM1 port or if the query form of the common command is used (command followed by a "?").

4.2.1 RS232 interface

To establish RS232 communications a standard pin-to-pin DB-9F to DB-9M RS232 cable must be used to connect the host COM port to PG9000 COM1. The interface settings of both ports must be the same.

Note

PG9000 supports an independent RS232 self-test to verify that the PG9000 RS232 ports are operating correctly and the interface cable being used is valid. Use this self-test to troubleshoot if you are having difficulty establishing communications with any PG9000 COM1 (see Section 3.13.5.3).

4.2.1.1 COM1

The PG9000 COM1 RS232 interface is located on the PG9000 Remote Electronics Module (REM) rear panel. It is a 9-pin female DB-9F connector configured as a DCE device. Data is transmitted out of PG9000 using pin 2, and is received on pin 3. This allows a standard pin-to-pin DB-9M to DB-9F RS232 cable to be used to connect to a DTE host (see Table 19). Handshaking is NOT required or supported.

COM1 RS232 commands must be terminated with at least a single carriage return character, while line feed characters are ignored. All RS232 responses from PG9000 are terminated with a carriage return character and a line feed character (either **<CR><LF>** or **<LF><CR>** see Section 3.13.5.1).

 © 1998-2010 Fluke Calibration

원문: Fluke Calibration PG9602/9607 메뉴얼(영문) · 제조사 원문 자료입니다. 사양은 제조사 사정에 따라 변경될 수 있습니다.

Table 19. COM1 DB-9F Pin Designation

IBM PC/XT DB-9F CONNECTIONS		IBM PC/XT DB-9M to PG9000 DB9F CONNECTIONS	
DB-25M	DB-9F	DB-9M	DB-9F
2	3	3	3
3	2	2	2
7	5	5	5

4.2.1.2 COM2, COM3 and COM4

The PG9000 COM2, COM3 and COM4 RS232 interfaces are located on the PG9000 Remote Electronics Module (REM) rear panel. They are 9-pin male DB-9M connectors configured as a DTE device. Data is transmitted out of PG9000 using pin 3 and is received on pin 2. This allows a standard pin-to-pin DB-9F to DB-9M RS232 cable to be used to connect to a DCE slave (see Table 20). Handshaking is NOT required or supported.

COM2, COM3 and COM4 are used by the PG9000 Platform to communicate with external devices. An external barometer and/or vacuum gauge can be connected to COM2 (see Sections 3.13.5.4, 3.13.5.5. An automated pressure control component can be connected to COM3. Almost any RS232 device that uses text commands and a <CR> or <CR><LF> terminator can be connected to COM4 using the PG9000 “PASSTHRU” command to pass commands from the host to the device.

Table 20. COM2, COM3 and COM4 DB-9M Pin Designation

PIN #	FUNCTION	DESCRIPTION
2	RxD	This pin accepts serial data from another PG9000 or another device.
3	TxD	This pin transmits serial data from the PG9000 to another PG9000 or another device.
4	DTR	Data Terminal Ready. Held at 5 Volts.
5	Grn	This pin is the common return for the TxD and RxD signals.

IBM PC/XT DB-25F to DB-9M CONNECTIONS		IBM PC/XT DB-9F to PG9000 DB9M CONNECTIONS	
DB-25F	DB-9M	DB-9F	DB-9M
2	3	3	3
3	2	2	2
7	5	5	5

4.2.2 IEEE-488 (GPIB)

The PG9000 IEEE-488 interface is located on the PG9000 Remote Electronics Module (REM) rear panel. The physical and electrical interface conforms to IEEE Std 488.1-1987 Subset E2 and IEEE Std. 488.2-1992. Do NOT attempt to communicate with the IEEE-488 interface while using the COM1 interface. The IEEE-488 receive buffer is 250 bytes deep. PG9000 will hold OFF release of the NRFD handshake line until it can service and empty the receive buffer. This keeps the buffer from overflowing.

IEEE-488 commands must be terminated with a single line feed character along with the assertion of the EOI line. All IEEE-488 responses from PG9000 are terminated with a line feed character along with the assertion of the EOI line. Replies are held in a buffer until the host computer gets them, so it is possible to have old replies in this buffer while expecting new replies from a just issued command.

원문: Fluke Calibration PG9602/9607 메뉴얼(영문) · 제조사 원문 자료입니다. 사양은 제조사 사정에 따라 변경될 수 있습니다.

TS-TL-FLK-082

we measure, we calibrate, we validate.
㈜테솔 · www.tessol.com TS-TL-FLK-082 130 / 192
KOLAS 국제공인교정기관 · ISO/IEC 17025

Address	10
Terminating Characters	**<CR>** and **<LF>** with EOI asserted with **<LF>**
IEEE Local Functions Supported	SH1, AH1, T4, L2, RL2, DC2 Parallel poll mode is not supported
Physical Interface	IEEE-488.2 with tri-state bus drivers
IEEE-488	To establish IEEE-488 communications the host computer must have an IEEE-488 card and PG9000 must be correctly addressed. PG9000's IEEE-488 address can be set locally from the front panel using **[SPECIAL]**, **<5Remote>** (see Section 3.13.5.2). An IEEE-488 interface cable must be used.

4.3 Commands

4.3.1 Command Syntax

All PG9000 commands are ASCII strings and are summarized in Table 21. The user **must** wait for PG9000 to reply before sending another command. An exception to this is the use of any of the IEEE Std. 488.2 Common Commands via the IEEE-488 interface (these Common Commands are shown first in 4.3.4.1 and always start with an asterisk: "*"). The common commands only generate a reply if using the COM1 port or if the query form of the common command is used (command followed by a "?").

4.3.2 Command Summary

Table 21. Command Summary

COMMAND	DESCRIPTION
ABORT	Interrupt PG9000 activity and put it in an idle state
AMPHx(=)	Set or read the source for ambient humidity
AMBPx(=)	Set or read the source for ambient pressure
AMBTx(=)	Set or read the source for ambient temperature
AMB	Read back the current ambient conditions
AMHERR	Read error messages from AMH automated mass handler
AMHLOAD(=)	Load or unload all AMH masses
AMHMS(=)	Read or set the discreet AMH mass load
AROT(=)	Set or read the current automated motorized rotation status
ATMHEIGHT(=)	Set or read the ATM head height
BELL(=)	Read or select the mass loading bell to use
BELLx(=)	Read or set a mass loading bell's information
CALx(=)	Set or read the calibration coefficients for an internal sensor
*CLS	Clear the status registers and all queues
COMx(=)	Set or read the COMx port configuration
DATE(=)	Set or read the current date
DIFLOAD	Execute the mass load determined by the DIFSETUP command
DIFOFFSET(=)	Read or set the differential mode RPM offset value
DIFSETUP	Prepare PG7601 to determine the differential mode RPM offset
DUTHEIGHT(=)	Set or read the DUT head height
*ESE(?)	Read or set the Event Status Enable Register
ERR	Read the last error message
*ESR?	Read the Event Status Register
*IDN?	Identify the product and software version
LOCALG(=)	Set or read the local gravity
LOCAL	Local operation

© 1998-2010 Fluke Calibration

원문: Fluke Calibration PG9602/9607 메뉴얼(영문) · 제조사 원문 자료입니다. 사양은 제조사 사정에 따라 변경될 수 있습니다.

we measure, we calibrate, we validate.
KOLAS 국제공인교정기관 · ISO/IEC 17025
㈜테솔 · www.tessol.com TS-TL-FLK-082 131 / 192
TESSOL Technical Library
TS-TL-FLK-082

COMMAND	DESCRIPTION
MASSSETx(=)	Set or read the mass set values
MASSx(=)	Set or read the mass set data
MASS(=)	Set or read the selected mass set
MEDIA(=)	Set or read the DUT head medium
MEM	Read the memory OK flag
MMODE(=)	Set or read the measurement mode
MRES(=)	Set or read the mass loading resolution
MROT(=)	Set or read the manual motorized rotation status
MR	Read the current mass load
MS=	Specify a new mass target, loading masses if AMH enabled
OHMS	Read the ambient PRT and piston-cylinder PRT resistance
*OPC(?)	Read or set the Operation Complete register (not applicable to the PG9000)
*OPT?	Read the PG9000 options installed
PCTx(=)	Set or read the source for the piston-cylinder temp
PGEN(=)	Set or read the automated pressure generation setting
PISTONRDYx(=)	Set or read piston rotation rate limits.
PISTONVARx(=)	Set or read additional piston variables
PISTONx(=)	Set or read the piston header information
PISTON(=)	Set or read the piston in use
PPC=	Send a command to an external pressure generation/control component.
PPCPR	Read the pressure measured by a PPC pressure controller connected to PG9000's COM3.
PPOS	Read the current piston position
PRTPCn	Set or read the piston cylinder temperature PRT information
PR	Read the current PG9000 defined pressure and "ready" status
PS=	Specify a new PG9000 target pressure, loading masses if AMH enabled
READYx(=)	Set or read the ready criteria for a specific "Setup"
READYCK(=)	Set or read the ready check flag status
REMOTE	Set the PG9000 into local lockout condition
RESET	Set basic PG9000 operating conditions to default. Equivalent to front panel "Reset, Sets".
RESUME	Resume the suspended process of setting a new pressure by remote command.
RESUME(=mode)	Set the resume mode, which determines whether a pressure setting process initiated by remote command will pause after target entry and require the RESUME command to continue .
*RST	Reset user settings to factory defaults
SETUP(=)	Set or read the setup to use
SN	Read the PG9000 serial number
SPEED	Read the piston rotation speed
*SRE(?)	Read or set the Service Request Register
*STB?	Read the Status Byte
TIME(=)	Set or read the current time
*TST?	Read the system self test results
UCOEF	Read the current pressure units conversion coefficient
UDD(=)	Set or read the user defined external barometer settings
UDU(=)	Set or read the user defined pressure unit
UDV(=)	Set or read the user defined external vacuum gauge settings
UL(=)	Set or read the upper limit of an external pressure generation/control component.
UNIT(=)	Set or read the current pressure unit
VACPx(=)	Set or read the source for the vacuum measurement

© 1998-2010 Fluke Calibration

원문: Fluke Calibration PG9602/9607 메뉴얼(영문) · 제조사 원문 자료입니다. 사양은 제조사 사정에 따라 변경될 수 있습니다.

COMMAND	DESCRIPTION
VAC(=)	Set or read the vacuum reference flag
VENT(=)	To vent the test pressure to atmosphere if an automated pressure generation/control component is being used for automatic pressure generation.
VER	Read version number of the internal software
#	Send a command through PG9000 to an external RPM on COM2

4.3.3 Error Messages

The PG9000 always replies to a command. If the command is incorrect or contains invalid data, an error number is returned in the form "ERR# *n*" where *n* is an integer number that represents a specific error. This allows for easy error trapping by the host computer. Table 22 is a list of the possible error numbers and the error description for each.

Table 22. Error Messages

REPLY	DESCRIPTION
ERR #0	OK
ERR #1	First argument missing or out of range
ERR #2	Second argument missing or out of range
ERR #3	Third argument missing or out of range
ERR #4	Fourth argument missing or out of range
ERR #5	Fifth argument missing or out of range
ERR #6	Sixth argument missing or out of range
ERR #7	Seventh argument missing or out of range
ERR #8	Eighth argument missing or out of range
ERR #9	Unknown command
ERR #10	Motorized rotation recovering from overload
ERR #11	Command missing argument
ERR #12	System overpressured
ERR #13	External RPM or PG9000 not detected
ERR #14	User unit not defined
ERR #15	Range jumper setting invalid
ERR #16	Element not defined
ERR #17	UDD not defined
ERR #18	Command not yet available
ERR #19	Not available with gauge units
ERR #20	Not available with vacuum reference
ERR #21	Internal pointer error
ERR #22	Pressure must be below 20 psia
ERR #23	Option not available or installed
ERR #24	Not available with isolation on
ERR #25	Must be READY set
ERR #26	COM port failed to initialize
ERR #27	Internal device time out error
ERR #28	External device time out error
ERR #29	File not opened
ERR #30	File end
ERR #35	PG9000 must first be setup for differential mode
ERR #36	Mass load invalid
ERR #37	External device invalid
ERR #38	External device configured incorrectly

© 1998-2010 Fluke Calibration

원문: Fluke Calibration PG9602/9607 메뉴얼(영문) · 제조사 원문 자료입니다. 사양은 제조사 사정에 따라 변경될 수 있습니다.

TS-TL-FLK-082

we measure, we calibrate, we validate.
KOLAS 국제공인교정기관 · ISO/IEC 17025
㈜테솔 · www.tessol.com TS-TL-FLK-082 133 / 192

REPLY	DESCRIPTION
ERR #39	External device reply invalid
ERR #40	Not ready
ERR #41	Measurement outside limits
ERR #42	Storage Fault
ERR #43	Storage verification error

4.3.3.1 AMH Errors

If the optional AMH mass handler is being used, it can generate it's own error message during operation. This usually occurs if the AMH is not properly setup, or has a mechanical failure. The 3rd character of the "PR" query reply will be an 'E' to indicate if the AMH has failed to operate as expected. If this occurs the "AMHERR" command may be used to get the specific AMH error message. See Section 3.7.2.8 for more details.

4.3.4 Command descriptions

Each command description gives the full syntax showing usage. Ranges of parameters or parameter types are indicated. There are two types of commands. The Common and Status Commands support IEEE STD 488.2, while the PG9000 commands access all other functions.

4.3.4.1 IEEE Std. 488.2 Common And Status Commands

PG9000 supports a set of commands that are common to all instruments conforming to IEEE Std. 488.2 protocol. Though defined by the IEEE-488.2 standard, they also apply to PG9000 RS232 (COM1) communications. These commands make it easy to perform basic functions for any device that supports them. These command also cover the status reporting commands. Refer to Section 4.4 for details on the status registers mentioned in these commands. Query forms of these commands must be followed by a question mark and IEEE-488.2 Common Commands always start with an asterisk ("*"). Unlike the other PG9000 commands, they must have a space instead of an equals sign ("=") between the command and any arguments. Also unlike the other PG9000 commands, if using the IEEE-488 port, the query form (command is immediately followed by a "?") must be used to get a reply. If using the COM1 port and the command is not a query, "OK" will be returned.

∗CLS	
Purpose	Clear all of the status and event structures.
Syntax	"∗CLS"
Remarks	This program message clears the following evens and status registers: Standard Byte Register (STB) Standard Event Status Register (ESR) Error Queue AMH error message Pending OPC operations
Example	Command: "*CLS" Reply: "OK" (using COM1. No reply if IEEE-488 port)

원문: Fluke Calibration PG9602/9607 메뉴얼(영문) · 제조사 원문 자료입니다. 사양은 제조사 사정에 따라 변경될 수 있습니다.

∗ESE(?)	
Purpose	Read or set the Standard Event Status Enable Register.
Syntax	"∗ESE *n*" "∗ESE?"
Parameters	n: '0 to 255' This is the decimal representation of the bit(s) to enable. To enable the PON and QYE bits, the argument would be 128 + 4 = 132.
Query Reply	*n* (0 to 255)
Remarks	The Standard Event Status Enable register determines which bits in the standard Event Status Register are enabled and included in the Status Byte Register (ESB bit), and can assert the SRQ line. The reply is in decimal numeric form.
Example	Command: "*ESE 132" Reply: "OK" (using COM1. No reply if IEEE-488 port) Command: "*ESE?" Reply: "132"

∗ESR?	
Purpose	Read the Standard Event Register.
Syntax	"∗ESR?"
Query Reply	*n* (0 to 255)
Remarks	The Standard Event Register contents are cleared after reading. The reply is in decimal numeric form.
Example	Command: "*ESR?" Reply: "4"

∗IDN?	
Purpose	Identify the PG9000 model, and serial number.
Syntax	"∗IDN?"
Remarks	The identification reply is made up of the manufacturer, the model, the serial number and the software version. Each is separated by a comma.
Query Reply	The version string.
Example	Command: "*IDN?" Reply: "FLUKE, PG9607, 1001, Ver3.00a-Lib:nmcm

∗OPC(?)	
Purpose	Sets the operation complete bit when all operations have completed.
Syntax	"∗OPC" "∗OPC?"
Remarks	This Command enables PG9000 to set the OPC bit in the Standard Event Status Register when it has completed all pending functions. The Query replies with a "1" when all functions are complete. Since PG9000 does not support overlapping commands, this command has no practical use.
Query Reply	"0" or "1"
Example	Command: "*OPC" Reply: "OK" (using COM1. No reply if IEEE-488 port) Command: "*OPC?" Reply: "1"

∗OPT?	
Purpose	Reads the list of installed molbloc RFM options.
Syntax	"∗OPT?"
Remarks	This Query returns any registered option(s) installed in the PG. Each option is separated by a comma.
Query Reply	A comma delimited text field of the installed options.
Example	Command: "*OPT?" Reply: "NONE" (no options installed) Reply: "auto rotation" (auto rotation option)

∗RST	
Purpose	Resets the PG9000 settings to factory settings.
Syntax	"∗RST"
Remarks	This Command sets the PG9000 settings to factory settings which is equivalent to a front panel executed **[SPECIAL], <5Reset>, 1sets**. This does not affect the communications settings.
Example	Command: "*RST" Reply: "OK" (using COM1. No reply if IEEE-488 port)
See Also:	3.13.9.1

 © 1998-2010 Fluke Calibration

원문: Fluke Calibration PG9602/9607 메뉴얼(영문) · 제조사 원문 자료입니다. 사양은 제조사 사정에 따라 변경될 수 있습니다.

∗SRE(?)	
Purpose	Read or set the Service Request Enable Register.
Syntax	"∗SRE *n*" "∗SRE?"
Parameters	n: '0 to 255' This is the decimal representation of the bit(s) to enable. To allow the MAV and ESB bits to assert the SRQ line, the argument would be 32 + 16 = 48. Bit 6 (64) is reserved and cannot be set.
Remarks	The Service Request Enable Register determines which bits of the Status Byte can set the MSS bit of the Status Byte and request service by asserting the SRQ line of the IEEE-488 interface.
Query Reply	*n* (0 to 255)
Example	Command: "*SRE 48" Reply: "OK" using COM1. No reply if IEEE-488 port) Command: "*SRE?" Reply: "48"

∗STB?	
Purpose	Read the Status Byte Register.
Syntax	"∗STB?"
Remarks	The Status Byte Register reflects the general status of the PG. The 'MSS' bit state is represented by bit 6.
Query Reply	*n* (0 to 255)
Example	Command: "*STB?" Reply: "4"

∗TST?	
Purpose	Read the power on self test status.
Syntax	"∗TST?""
Remarks	The PG9000 system memory stores the user settings (units, mode, resolution) and retains them when the unit is shut off. On power up, this memory is checked. If this memory is corrupted, all user settings are reset to default (as if the "∗RST" program message was executed), and the ∗TST query returns a '1'. If PG9000 passed the test on power up OR if the ∗TST query was used at least once since the unit was powered up the reply is '0'.
Query Reply	"0" or "1"
Example	Command: "*TST?" Reply: "1"
See Also	3.13.9.1

4.3.4.2 PG9000 Commands

#	
Purpose	To send a command through PG9000 to an external device on COM2.
Syntax	"#ddddd"
Default	N/A
Argument	N/A
Remarks	If PG9000 receives a command from the serial port (COM1) with a "#" as the leading character, the character is stripped off and the command is sent out the secondary serial port (COM2). The PG9000 will then wait for up to 4 seconds for a reply. Do not attempt to communicate with a device that is currently being used by the PG9000 as a vacuum sensor or barometer.
Example	Typical command: "#*0100P3" Typical reply: "*000114.503"
Error	ERR# 27 Device is currently active ERR# 28 Device did not reply within 4 seconds

ABORT	
Purpose	Aborts any active process executing in the PG9000.
Syntax	"ABORT"
Default	N/A
Argument	N/A
Remarks	The ABORT command places the PG9000 in an Idle state, halting the execution of any active processes. This includes automated AMH mass loads, auto float and auto rotation operations or any differential mode preparation sequence.
Example	Typical command: "ABORT" Typical reply: "ABORT"
Error	None
See Also	"PS=", "MS=", "AROT", "DIFOFFSET", "DIFSETUP"

원문: Fluke Calibration PG9602/9607 메뉴얼(영문) · 제조사 원문 자료입니다. 사양은 제조사 사정에 따라 변경될 수 있습니다.

we measure, we calibrate, we validate.
KOLAS 국제공인교정기관 · ISO/IEC 17025

AMBHx(=)	
Purpose	Set or read the source for the ambient humidity measurement. Also optionally sets the USER defined measurement.
Syntax	"AMBHx=source, meas" "AMBHx=source" "AMBHx"
Default	INTERNAL
Argument	x: The setup number from 1 to 13. See the SETUP command. Source: The measurement source. This can be INTERNAL, NORMAL or USER. Meas: The current measurement used. This can only be set if the source argument is USER. If specified, the limit for this argument is 0 to 100 %.
Remarks	PG9000 has an on-board humidity sensor that can be used as the source of ambient humidity values in calculations. You may also request that another source be used for this measurement. The measurement source can be the internal sensor, a user defined fixed value, or a normal value. The SETUP function allows 13 separate source configurations for the various SETUP variables to be saved in 12 files. The SETUP command selects which of the files to make active. Setup number 1 is restricted as INTERNAL only to serve as a manufacturer's fixed Setup, and cannot be changed.
Example	Typical command: "AMBH2=USER,50" Typical reply: "USER, 50 %" Typical command: "AMBH9=INTERNAL" Typical reply: "INTERNAL, 25 %"
Error	See 9.3.2 Error Messages ERR #1 The setup number x is invalid ERR #2 The source argument is invalid ERR #3 The meas argument is invalid
See Also	1.2.1.3, 3.1, 3.11.6, 3.12, "SETUP"

AMBPx(=)	
Purpose	Set or read the source for the ambient pressure measurement. Also optionally sets the USER defined measurement.
Syntax	"AMBPx=source, meas" "AMBPx=source" "AMBPx"
Default	INTERNAL
Argument	x: The setup number from 1 to 13. See the SETUP command. Source: The measurement source. This can be INTERNAL, NORMAL, USER, RPM or the user defined barometer "label". Meas: The current measurement used in kPaa. This can only be set if the source argument is USER. If specified, the limit for this argument is 70 to 110 kPaa.
Remarks	PG9000 has an internal atmospheric pressure sensor that can be used as the source of ambient pressure values in calculations. You may also request that another source be used for this measurement. The measurement source can be the internal sensor, a user defined fixed value, the normal value, an external RPM, or a user defined external barometer. If an external RPM or a user defined external barometer is chosen, you must setup the COM2 port to the proper settings. It is also advised to set this up prior to selecting the setup to make the device active. If you specify "RPM" or the user defined barometer "label" , then all other barometer source setups set to "RPM" or the user defined barometer will change to this source, as it is a global selection. The SETUP function allows 13 separate source configurations for the various SETUP variables to be saved in 12 files. The SETUP command selects which of the files to make active. Setup number 1 is the manufacturer's preferred Setup, and cannot be changed. The meas argument is used to allow the user to define a fixed value if the source is set to USER. The reply will always include the source and the meas fields.
Example	Typical command: "AMBP2=USER,101.90" Typical reply: "USER, 101.90 kPaa" Typical command: "AMBP9=INTERNAL" Typical reply: "INTERNAL, 98.234kPaa"
Error	See the "UDU" command See the "COM2" command See 9.3.2 Error Messages ERR #1 The setup number x is invalid ERR #2 The source argument is invalid ERR #3 The meas argument is invalid
See Also	1.2.1.3, 3.1, 3.11.6, 3.12, "SETUP", "UDU", "COM2"

© 1998-2010 Fluke Calibration

원문: Fluke Calibration PG9602/9607 메뉴얼(영문) · 제조사 원문 자료입니다. 사양은 제조사 사정에 따라 변경될 수 있습니다.

TS-TL-FLK-082

we measure, we calibrate, we validate.
KOLAS 국제공인교정기관 · ISO/IEC 17025

AMBTx(=)	
Purpose	Set or read the source for the ambient temperature measurement. Also optionally sets the USER defined measurement.
Syntax	"AMBTx=source, meas" "AMBTx=source" "AMBTx"
Default	INTERNAL
Argument	x: The setup number from 1 to 13. See the SETUP command. Source: The measurement source. This can be INTERNAL, NORMAL or USER. Meas: The current measurement used is degrees Celsius. This can only be set if the source argument is USER. If specified, the limit for this argument is 0 to 50 ° C.
Remarks	PG9000 has an internal ambient temperature sensor that can be used as the source of ambient temperature values in calculations. You may also request that another source be used for this measurement. The measurement source can be the internal sensor, a user defined fixed value or the normal value. The SETUP function allows 13 separate source configurations for the various SETUP variables to be saved in 12 files. The SETUP command selects which of the files to make active. The SETUP command selects which of the 13 to use. Setup number 1 is restricted as INTERNAL only to serve as a manufacturer's fixed Setup, and cannot be changed. The meas argument is used to allow the user to define a fixed value if the source is set to USER. The reply will always include the source and the meas fields.
Example	Typical command: "AMBT2=USER,22.00" Typical reply: "USER, 22.0 dC" Typical command: "AMBT9=INTERNAL" Typical reply: "INTERNAL, 23.2 dC"
Error	See Section 4.3.3 Error Messages ERR #1 The setup number x is invalid ERR #2 The source argument is invalid ERR #3 The meas argument is invalid
See Also	1.2.1.3, 3.1, 3.11.6, 3.12, "SETUP"

AMB	
Purpose	To read all of the ambient conditions from the sources defined by the current setup.
Syntax	"AMB"
Default	N/A
Argument	None
Remarks	PG calculations uses ambient conditions to calculate the current pressure. The source of these ambient conditions is defined by the current setup (see the SETUP command). These ambient values can be read at once using this command. They are returned along with the measurement units, and are separated by commas. The units and resolution of the measurement fields are fixed. The format returned depends on the PG model: PG9607 has two piston-cylinder PRT measurements: *"xxx.xxxx kPaa, xxx.x Paa, xxx %, xx.xx dC, xx.xx dC, xx.xx dC, xx.xx dC"* The first field is the atmospheric pressure. The second field is the vacuum under the bell jar (Abs by Vac only). The third field is the relative humidity. The fourth field is the ambient temperature. The fifth field is the average of the piston-cylinder temperatures (PRT1 & PRT2). The sixth field is the first piston-cylinder temperature (PRT1). The seventh field is the second piston-cylinder temperature (PRT2). Other PG9000 models have one piston-cylinder PRT measurement: *"xxx.xxxx kPaa, xxx.x Paa, xxx %, xx.xx dC, xx.xx dC"* The first field is the atmospheric pressure. The second field is the vacuum under the bell jar (Abs by Vac only). The third field is the relative humidity. The fourth field is the ambient temperature. The fifth field is the piston-cylinder temperature (PRT1).
Example	Typical cmd: "AMB" Typical reply: "98,4594 kPaa,18.3 Paa,24%,23.45 dC,22.55 dC,22.53 dC, 22.57 dC
Error	None
See Also	1.2.1.3, 3.1, 3.11.6, 3.12, "SETUP"

원문: Fluke Calibration PG9602/9607 메뉴얼(영문) · 제조사 원문 자료입니다. 사양은 제조사 사정에 따라 변경될 수 있습니다.

AMHERR	
Purpose	To read the last known error message from an active external AMH automated mass handler.
Syntax	"AMHERR"
Remarks	If an optional AMH automated mass handler is being used, it can generate its own error message during operation. This usually occurs if the AMH is not properly setup, for example the drive air pressure is inadequate, or it has a mechanical failure. If the AMH fails to operate at expected., the 3rd character of the "PR" command reply is an "E". If this occurs, the "AMHERR" command can be used to get the specific AMH error message, and refer to Section 3.7.2.8. It is not recommended to routinely poll the PG with the AMHERR command as the response may contain a previous error that is recoverable by the PG. It is instead recommended to use the "PR" command to detect an AMH error first. The AMH error message is cleared by the next successful AMH operation or by sending the "*CLS" command. If there is no error, "OK" is returned.
Example	Typical command: "AMHERR" Typical reply: "ERR#122" (Section 3.7.2.8) "OK" (no AMH errors or AHM not active) Typical reply:
See Also	Section 3.7.2.8, ""PR"

AMHLOAD=	
Purpose	Load or unload all the AMH's masses (used with optional AMH automated mass handling system).
Syntax	"AMHLOAD=action"
Default	N/A
Argument	action:: '0' Unloads masses Loads all masses
Remarks	The optional AMH automated mass handling system can load and unload masses on the PG9000 piston-cylinder automatically. The masses can all be loaded onto the piston or unloaded and held in the mass handling by a single command. Setting '1' causes the AMH to operate to load all the masses. Setting '0' causes the AMH to operate to unload all the masses. This command can only be executed when the an AMH mass set is selected and the AMH is idle. The operation can take several seconds to complete before the PG replies to this command. The PG uses the resulting mass load for its current pressure target. The AMHERR command should be used to check for AMH errors after the load
Example	Typical command: "AMHLOAD=1" Typical reply: "AMHLOAD=1"
Error	See Section 4.3.3 Error Messages ERR #1 Invalid or missing argument ERR# 13 AMH is not enabled ERR# 37 AMH load / unload operation error ERR# 40 AMH is not idle
See Also	3.13.8, 3.13.8.3, 3.13.8.4, 3.7

AMHMS(=)	
Purpose	Read or set the discrete AMH mass load.
Syntax	"AMHMS=*main, binary*" "AMHMS"
Argument	*main*: The number of main masses to load *bin*: The binary mass load. This is a sum of the binary masses to load: 1: 0.1 kg mass 2: 0.2 kg mass 4: 0.4 kg mass 8: 0.8 kg mass 16: 1.6 kg mass 32: 3.2 kg mass 64: 6.4 kg mass
Remarks	An AMH mass set must be active and an AMH automated mass handler must already be initialized to use this command. The PG9000 will reflect the requested mass load in the displayed pressure measurements. The RESUME command is not required to initiate the auto float sequence when automatic pressure generation is enabled.
Example	Typical command: "AMH=3,19" (3 main masses plus 1.9 kg binary mass load) Typical reply: "3, 19"
See Also	2.4.10, 3.7.1, "MASS=", ""MASS*n*"
Error	See Section 4.3.3 Error Messages ERR #1 Invalid mass load or AMH not active.

 © 1998-2010 Fluke Calibration

원문: Fluke Calibration PG9602/9607 메뉴얼(영문) · 제조사 원문 자료입니다. 사양은 제조사 사정에 따라 변경될 수 있습니다.

AROT(=)	
Purpose	To set or read the automated motorized rotation status.
Syntax	"AROT=x" "AROT"
Default	AROT=0
Argument	x: The status to set.
Remarks	PG9000 can rotate and brake the piston automatically when appropriate. This function can be enabled by setting the status to '1'. Setting the status to '0' disables the auto rotate function. Enabling auto rotate will also restart a suspended or aborted rotation if the piston is floating..
Example	Typical command: "AROT=0" Typical reply: "AROT=0"
Error	See Section 4.3.3 Error Messages ERR #1 The argument was not a '0' or a '1'
See Also	3.11.8, 3.11.13

ATMHEIGHT(=)	
Purpose	To set or read the height of an external barometer relative to the reference level on the PG9000 mounting post (ATM head).
Syntax	"ATMHEIGHT=height" "ATMHEIGHT"
Default	"ATMHEIGHT= 0.00 cm
Argument	height: The position of the barometer relative to the PG9000 mounting post reference level. This value will be negative if the sensor is below the reference level, and positive if the sensor is above the mark.
Remarks	PG9000 uses this height difference to apply a head correction to the atmospheric measurement (ATM head). For the internal sensor, this value is -10 cm. This value can be set from –1 000 to 1 000 cm.
Example	Typical command: "ATMHEIGHT=-20" Typical reply: "-20.00 cm"
Error	See Section 4.3.3 Error Messages ERR #1 The argument was <-1000 or >1000
See Also	3.11.7 PRINCIPLE, 3.13.3.3

BELL(=)	
Purpose	Read or select the mass loading bell to use.
Syntax	"BELL=x" "BELL"
Default	1
Argument	x: The mass bell number 1, 2, or 3.
Remarks	You may define up to three different loading mass bells to use with PG9000 using the BELLx command. You can then use the "BELL=x" command to select one of the three to use.
Example	Typical command: "BELL=2" Typical reply: "2"
Error	See Section 4.3.3 Error Messages ERR #1 Invalid or specifies a mass bell that is not defined
See Also	3.13.1 PRINCIPLE, 3.13.1.15

BELLx(=)	
Purpose	Read or set a mass loading bell's information.
Syntax	"BELLx=Sn, Dens, Mass, Report#, CalDate, EditDate" "BELLx"
Default	N/A
Argument	x: The mass bell number 1, 2, or 3 Sn: The mass bell serial number (4 digits max) Dens: The mass bell density Mass: The bell mass (kg) Cert#: The Calibration report number (10 digits max) CalDate: The date that the mass set was last calibrated (YYYYMMDD) EditDate: The date that the mass information was last edited.(YYYYMMDD)
Remarks	You may define up to three different mass bells to use with the PG9000 using the BELLx command. You can then use the "BELL=x" command to select one of the three to use.
Example	Typical command: "BELL1" Typical reply: "BELL1=101,5058.0 kg/m3,0.500010 kg, 1001, 20060415,20060415"
Error	See Section 4.3.3 Error Messages ERR #1..7 Invalid or specifies a mass set that is not defined
See Also	3.13.1 PRINCIPLE, 3.13.1.13

원문: Fluke Calibration PG9602/9607 메뉴얼(영문) · 제조사 원문 자료입니다. 사양은 제조사 사정에 따라 변경될 수 있습니다.

CALx(=)	
Purpose	To set or read the calibration adder and multiplier for PG9000 Platform internal measurement sensors.
Syntax	"CALx=adder, mult" "CALx"
Default	CALx=0, 1
Argument	x: "1" for the ambient temperature sensor (degrees Celsius). "2" for the ambient pressure sensor (Paa). "3" for the vacuum sensor (Paa). "4" for the relative humidity sensor (%RH). adder: The calibration adder. mult: The calibration multiplier.
Remarks	The internal sensors can be calibrated by the user if needed. This is possible by specifying an adder or a multiplier, or both if needed. The ambient sensor measurement is adjusted using the user calibration adder and multiplier: Adjusted Ambient measurement = (measurement x multiplier) + adder This calibration information should be changed with care, as it affects the ambient value. It does not affect the normal value or a user defined value. Use the PRTPC*n* command to access the piston cylinder temperature PRT calibration(s).
Example	Typical command: "CAL2=100.0, 1" Typical reply: "100.0 Paa, 1.000000"
Error	See Section 4.3.3 Error Messages
See Also	5.2.1

COMx(=)	
Purpose	To set or retrieve the configuration of the COM ports.
Syntax	"COMx=baud,parity,data,stop" "COMx"
Default	"COM1=2400,E,7,1" "COM2=9600,N,8,1" "COM3=2400,E,7,1" "COM4=2400,E,7,1"
Argument	x: "1" for COM1 port "2" for COM2 port "3" for COM3 port "4" for COM4 port
Remarks	The available parameters are listed below. Once the port is configured, the configuration is stored in permanent memory and becomes active on power up. When the configuration of the primary port (COM1) is changed, the returned reply is sent at the original COM1 settings but all subsequent replies will be sent at the new configuration settings. COM2 is used for an external barometer and/or external vacuum gauge. COM3 is used for control of an external PPC pressure controller. COM4 is used for general purpose device communications using the PASSTHRU command. Serial Parameters: Baud rates: 300,1200,2400,4800,9600,19200, 28800, 38400 Parity: O – Odd, E – Even, N – None Data bits: 7 8 Stop bits: 1 2
Example	Typical command: "COM1=9600,E,7,1" Typical reply: "9600,E,7,1"
Error	See Section 4.3.3 Error Messages ERR #1 Missing or wrong COM setting
See Also	3.13.5, "PASSTHRU"

DATE(=)	
Purpose	To read or set the internal calendar.
Syntax	"DATE=YYYYMMDD" "DATE"
Default	N/A
Argument	The date in the YYYYMMDD format. YYYY: The year from 2000 to 2079. MM: The month 1 to 12. DD: The day of the month 1 to (up to) 31 depending on the month and year.
Remarks	The internal calendar is used to date stamp changes made to the internal sensor calibrations and the piston-cylinder module, mass set and mass loading bell files.
Example	Typical command: "DATE=20081231" Typical reply: " 20081231"
Error	See Section 4.3.3 Error Messages ERR #1 If invalid date argument
See Also	3.13.4.3

© 1998-2010 Fluke Calibration

원문: Fluke Calibration PG9602/9607 메뉴얼(영문) · 제조사 원문 자료입니다. 사양은 제조사 사정에 따라 변경될 수 있습니다.

DIFLOAD	
Purpose	Executes the mass load determined by the DIFSETUP command.
Syntax	"DIFLOAD"
Remarks	This command must be preceded by the DIFSETUP command. The DIFSETUP command sets up the PG9000 and determines the proper mass load for offset determination. The DIFLOAD command executes the mass load determined by the DIFSETUP command and places the PG9000 into the offset determination mode. When in this mode, use the DIFOFFSET command to query the PG for the calculated differential offset. The DIFOFFSET command is also used to save the offset as the new differential mode RPM offset value, and to exit the offset determination mode. The ABORT command can also be used to exit the offset determination mode. The reply is the same nominal mass values returned by the DIFSETUP command that is expected to be loaded.
Example	Typical command: ""DIFLOAD" Typical reply: "9.7 kg, 28.05 g"
Error	See the "DIFSETUP" and "DIFOFFSET" commands. ERR #1 Argument is invalid. ERR #23 Vacuum reference not supported by this PG9000. ERR #35 The "DIFSETUP" was not used prior to this command.
See Also	3.11.4.1, "DIFLOAD", "DIFSETUP"

DIFOFFSET (=)	
Purpose	Set or read the differential offset value.
Syntax	"DIFOFFSET=offset, pressure" "DIFOFFSET"
Default	Offset: 0 Pa Pressure: 101325.0 Paa
Argument	Offset: *"NEW"* Saves the current calculation of RPM offset if PG9000 is currently in the offset determination mode, else set the differential offset value in Pa. Pressure: The PG9000 defined pressure when the previously determined differential offset was saved or if *Offset* is "NEW", this argument is ignored and should not be used.
Remarks	The DIFOFFSET commands have two types of operation. If PG9000 is in the offset determination mode, the calculated offset of the external measurement device from the PG9000 defined pressure is returned along with the current PG9000 pressure. If the "NEW" arguments is given with this command, the calculated offset and PG9000 pressure are saved as the new RPM offset and pressure, and PG9000 exits the offset determination mode returning to normal operation, with differential measurement mode enabled. If the PG9000 is not in the offset determination mode, this command reads back only the RPM offset and pressure as determined previously. The command can also be used set them to another value.
Example	Typical command: "DIFOFFSET=7.1,97.100" Typical reply: "7.10 Pa, 97.10 000 Paa" If PG7601 is in the offset determination mode: Typical command: "DIFOFFSET=NEW" Typical reply: "4.13 Pa, 96.14321 Paa"
Error	See the "DIFSETUP" and "DIFLOAD" commands. ERR #1 The Offset field is invalid or missing. ERR #2 The Pressure field is invalid or missing. ERR #35 Offset was "NEW" but the PG is not in the offset determination mode.
See Also	3.11.4.1, "DIFLOAD", "DIFSETUP"

원문: Fluke Calibration PG9602/9607 메뉴얼(영문) · 제조사 원문 자료입니다. 사양은 제조사 사정에 따라 변경될 수 있습니다.

DIFSETUP	
Purpose	Prepare PG9000 to determine the differential RPM mode offset.
Syntax	"DIFSETUP"
Remarks	The differential mode of operation requires that an RPM offset be determined. This command sets up PG9000 to determine the RPM offset. The PG measurement mode is changed to absolute by vacuum, the mass load resolution is set to 0.01g, and the head correction is disabled. PG9000 must be setup to use an external pressure measurement device (RPM) connected to COM2 to execute this command. The reply to this command is the external device measurement; the true and the nominal mass load needed to generate the pressure indicated by the external device. After using this command to setup PG9000 for offset determination, use the "DIFLOAD" command to execute the mass load determined by this command. The external device (RPM) measurement, the actual true mass value, the main mass nominal value, and trim mass values that need to be loaded are returned by this command. It is provided in the following comma delimited format: bb.bbbbb Paa, aa.aaaaaa Kg, mm.m Kg, t.ttt g bb.bbbbb Paa: The barometer measurement. aa.aaaaaa kg: The actual total true mass value. mm.m kg: The total of the main mass's nominal values. t.tttg: The trim mass loaded.
Example	Typical command: ""DIFSETUP" Typical reply: "97.23238 Paa, 9.728002 kg, 9.7 ,g, 28.05 g"
Error	See the "DIFLOAD" and "DIFOFFSET" commands ERR #1 The barometer measurement resulted in an invalid mass load ERR #23 Vacuum reference not supported by this PG9000 ERR #28 An external measurement device has not been SETUP
See Also	3.11.4.1, "DIFLOAD", "DIFOSSET(=)"

DUTHEIGHT(=)	
Purpose	To set or read the height of an external Device Under Test (DUT) relative to the reference level on the PG9000 mounting post (DUT head).
Syntax	"DUTHEIGHT=height" "DUTHEIGHT"
Default	"ATMHEIGHT=0.00cm"
Argument	height: The position of the device under test relative to the PG9000 mounting post reference mark. This value will be negative if the DUT is below the reference level, and positive if the DUT is above the reference level.
Remarks	PG9000 uses this height difference to apply a head correction to the pressure calculation. This value can be set from –1 000 to 1 000 cm.
Example	Typical command: "DUTHEIGHT=20" Typical reply: "20.00cm"
Error	See Section 4.3.3 Error Messages ERR #1 The argument was <-1000 or >1000
See Also	3.11.7, 3.11.3

ERR	
Purpose	To read the error messages of the last command.
Syntax	"ERR"
Default	ERR#=OK
Argument	N/A
Remarks	If the last response returned from PG9000 was an error (ERR#xx), then the error message that corresponds to that error can be read. If an error is received and a valid command is sent to PG9000 before the "ERR" command has been sent, the error pointer is reset and an "ERR# 0 = OK" will be returned with the next "ERR" command. The *CLS command clears any pending error messages. See Error Message Summary List Section 4.3.3.
Example	Typical command: "ERR" Typical reply: "Unknown command" (previous invalid command) Typical reply: "OK" (no error)
Error	None
See Also	4.3.3, "AMHERR"

© 1998-2010 Fluke Calibration

원문: Fluke Calibration PG9602/9607 메뉴얼(영문) · 제조사 원문 자료입니다. 사양은 제조사 사정에 따라 변경될 수 있습니다.

LOCALG(=)	
Purpose	Set or read the PG9000 local gravity.
Syntax	"LOCALG=x" "LOCALG"
Default	"LOCALG=9.80665"
Argument	X: The current local gravity.
Remarks	The local gravity is used in the mass to pressure calculation. The Setup determines if the local gravity, the normal gravity or a user defined gravity will be used for this calculation.
Example	Typical command: "LOCALG=9.805" Typical reply: "9.80500"
Error	See Section 4.3.3 Error Messages ERR #1 If x is <8 or >11
See Also	2.4.3, 3.12, 3.13.6

LOCAL	
Purpose	Place the device in the LOCAL mode.
Syntax	"LOCAL"
Default	N/A
Argument	N/A
Remarks	In LOCAL mode all front panel operations are available. The LOCAL command deactivates REMOTE mode.
Example	Typical command: ""LOCAL" Typical reply: "LOCAL"
Error	None
See Also	"REMOTE"

MASS(=)	
Purpose	Read or set the current mass set.
Syntax	"MASS=n" "MASS"
Default	N/A
Argument	N: The mass set number 1, 2, or 3.
Remarks	You may define up to three different mass sets to use with PG9000 using the MASSx and MASSSETx commands. The MASS(=) command is then used to select the current active mass set. A mass set must be defined before selecting it. If an AMH mass set is specified, the AMH automated mass handler is initialized.
Example	Typical command: ""MASS" Typical reply: "MASS=1"
Error	See Section 4.3.3 Error Messages ERR #1 n invalid or specifies a mass set that is not defined ERR #13 AMH mass set was specified but an AMH automated mass handler was not detected.
See Also	3.13.1.10, 3.13.1 PRINCIPLE

MASSx(=)	
Purpose	Read or set a mass set's general information.
Syntax	"Massx=Sn,Dens,extra1,extra2,extra3,Cert#,CalDate,EditDate, AMH" "Massx"
Default	N/A
Argument	x: The mass set number 1, 2, or 3. Sn: The mass set serial number (4 digits max). Dens: The main mass density. extra1/2/3: These are placeholders for data fields that are obsolete and are always '0'. Cert#: The calibration report number (10 digits max). CalDate: The date that the mass set was last calibrated (YYYYMMDD). EditDate: The date that the mass information was last edited (YYYYMMDD). AMH: '0' for a manual mass set '1' for an AMH mass set.
Remarks	You may define up to three different mass sets to use with PG9000 using the MASSx and MASSSETx command. The MASSSETx command must be used first. The MASSx command is then used to edit the mass set general information. If the "AMH" flag is set, the mass set defined must correspond exactly to the AMH's mass set.
Example	Typical command: "MASS1" Typical reply: "MASS1=101,8000.0 kg/m3,0,0,0,1002, 20060415, 20060415, 0"
Error	See Section 4.3.3 Error Messages ERR #1..9 Invalid arguments
See Also	3.6, 3.13.1.6, 3.13.1 PRINCIPLE, "MASSSETx"

원문: Fluke Calibration PG9602/9607 메뉴얼(영문) · 제조사 원문 자료입니다. 사양은 제조사 사정에 따라 변경될 수 있습니다.

MASSSETx(=)	
Purpose	Read and define the masses included in mass sets.
Syntax	"MASSSETX" "MASSSET=nominal,true (, AMHtype)" "MASSSET"
Default	N/A
Argument	x: The mass set number 1, 2, or 3. 0 To "close" a mass set. nominal: The nominal mass value. true: The true mass value. AMHtype: Optional AMH mass type specifier. '1' indicates that this mass is an AMH 'main' mass '0' indicates that this mass is an AMH 'binary' mass
Return	nominal mass, true mass, mass ID, AMH Type nominal: The nominal mass value (kg) true: The true mass value (kg) ID: The mass sequential ID (1..10) AMHtype: The AMH mass type. Only valid if the mass set is defined as an AMH mass set (see the "MASSx command).
Remarks	The PG9000 supports setup of up to three mass sets. A valid mass includes a nominal and a true mass value. The MASSSETx command accesses masses sequentially starting from the first defined mass. As a result, it is not possible to view or edit a specific mass in the mass set with a single command. All masses in the mass set must be edited or viewed in order to view or modify a single mass in the mass set. To read the mass set contents, send the "MASSSETx" command substituting 1,2 or 3 for "x" to specify a specific mass set. This "opens" the mass set for reading and returns the data for the first mass in the set. For a non AMH mass set, the first mass returned is always the makeup mass. Then send the "MASSSET" command without a mass set number repeatedly to retrieve the additional masses in the set one at a time. Masses are returned in their mass sequence order. When the end of the mass set is reached, "ERR #30" is returned. Always send "MASSSET0" to close a mass set that was opened using the MASSSETx command. Use the MASSx command to create a new mass set prior to using the MASSSETx command to add masses to the set. To define the mass set contents, send the "MASSSETx=nominal, true,[AMHType]" command to specify the mass set (1, 2, or 3) and to set the nominal and true mass values for the first mass in the set. This erases the current mass set and "opens" the mass set for writing. Then send "MASSSET=nominal,true," one at a time for each mass in the mass set. The commands must be sent in the mass loading order. With a manual mass set, the first mass in the set is always the special case "make up" mass that is always loaded first, when the requested mass exceeds its mass value. For an AMH mass set, always define the main mass set group first. In this case the first mass sent with the MASSSETx command will be the first main mass of the AMH mass set. Make sure to use "1" as the third argument for AMH mass set main masses.ie. "MASSSET1=10.2,10.200475,1" The mass ID returned by the MASSSETx command is auto determined by the PG9000 based on the order of mass entry. The ID orders masses that have the same nominal mass. If there are five (5) 10 kg masses, then they are identified as #1 through #5, and are loaded in this order when defining a pressure.
Example (non AMH set)	Typical command: ""MASSSET1" Typical reply: "4.00, 4.0000012, 1, 0" Typical command: ""MASSSET" Typical reply: "5.00, 5.0000008, 1, 0" Typical command: ""MASSSET" Typical reply: "5.00, 5.0000014, 2, 0" Typical command: ""MASSSET" Typical reply: "5.00, 5.0000011, 3, 0" Typical command: ""MASSSET0" Typical reply: "MASSSET0" Typical command: ""MASSSET1=10.2,10.201446,1" Typical reply: "10.2,10.201446,1,1" Typical command: ""MASSSET=10.2,10.200029,1" Typical reply: "10.2, 10.200029,2,1" Typical command: "MASSSET=0.1,0.100086,0" Typical reply: "0.1, 0.100086,1,0" Typical command: "MASSSET=0.2,0.200062,0" Typical reply: "0.2, 0.200062,1,0" Typical command: ""MASSSET0" Typical reply: "MASSSET0"
Example (AMH Mass Set)	

© 1998-2010 Fluke Calibration

원문: Fluke Calibration PG9602/9607 메뉴얼(영문) · 제조사 원문 자료입니다. 사양은 제조사 사정에 따라 변경될 수 있습니다.

we measure, we calibrate, we validate.
㈜테솔 · www.tessol.com TS-TL-FLK-082 145 / 192
KOLAS 국제공인교정기관 · ISO/IEC 17025

TS-TL-FLK-082

Error	See Section 4.3.3 Error Messages ERR #1 x mass set # is invalid ERR #2 The nominal mass value given is invalid ERR #3 The true mass value not within 10% of the nominal mass ERR #29 The mass set has not been “opened” yet ERR #30 You are at the end of the mass set
See Also	2.3.1.3, 3.6, “MASS”, “MASSx”
Error	ERR #1 Invalid mass load or AMH not active.

MEDIA(=)	
Purpose	Read or set the PG9000 pressurized medium type for DUT head corrections.
Syntax	“MEDIA=mediaType” “MEDIA=density” “MEDIA”
Default	“MEDIA=N2
Argument	mediaType: “N2”, “He”, “Air”, “Oil”, “H2O” or user set density value.
Remarks	Select one of five (5) available media for use with the PG or specify a user defined density. This allows PG9000 to utilize the correct internal calculations for head corrections.
Example	Typical command: “MEDIA=Air” Typical reply: “Air” Typical command: “MEDIA=920” Typical reply: “920.000”
Error	See Section 4.3.3 Error Messages ERR #1 Media type is invalid
See Also	3.11.7 PRINCIPLE, 3.13.3.1

MEM	
Purpose	Read the status of the internal data RAM since the last power up.
Syntax	“MEM”
Default	N/A
Argument	N/A
Remarks	On power up a memory test is run to check the integrity of the internal data RAM. If the memory has been corrupted then “FATAL MEMORY LOSS” will be displayed to alert the user. The status memory can be read from a remote computer. Typical causes of memory fault: Upgrade of PG9000 software Connection of a cable to PG9000 when PG9000 is on Failure of internal memory Return string: “MEM=0” System is OK “MEM=1” System memory has been corrupted or manually reset and the default operating parameters were loaded into memory
Example	Typical command: “”MEM” Typical reply: “MEM=1”
Error	None
See Also	“RESET”, “RST”

MMODE	
Purpose	Get or set the PG measurement mode and reference.
Syntax	“MMODE” “MMODE=*mode*”
Argument	Mode: "AATM" Absolute mode with atmospheric reference "AVAC Absolute mode with vacuum reference "G" Gauge mode with atmospheric reference "D" Differential mode
Remarks	This command sets both the unit mode and the measurement reference. This can also be accomplished using the UNIT and the VAC commands. Differential mode is a special case and requires special conditions to run.
Example	Typical command: “MMODE” Typical reply: “AATM”
Error	ERR #1 Invalid mode specified ERR #23 Vacuum reference disabled on this PG9000 platform ERR #32 Altitude or airspeed unit not allowed with atmospheric reference.
See Also	3.11.4, 3.11.3, “UNIT”, “VAC”

원문: Fluke Calibration PG9602/9607 메뉴얼(영문) · 제조사 원문 자료입니다. 사양은 제조사 사정에 따라 변경될 수 있습니다.

MRES(=)	
Purpose	Read or set the PG9000 mass loading resolution.
Syntax	"MRES=massResolution" "MRES"
Default	"MRES=0.01g
Argument	MassResolution: The mass loading resolution in grams.
Remarks	You must set the resolution that PG9000 uses to convert user provided pressure requests into mass loads. PG9000 will calculate the required mass load to the precision defined by the mass loading resolution. The maximum resolution is 0.001 gram, and the minimum is 100 g. The mass resolution is automatically set to 100 g whenever an AMH mass set is made active or AMH is initialized.
Example	Typical command: ""MRES=.01" Typical reply: "MRES=0.010g"
Error	See Section 4.3.3 Error Messages ERR #1 The resolution given is greater that 100g of less than 0.001 g
See Also	3.11.10

MROT(=)	
Purpose	Read or set the manual motorized piston rotation status.
Syntax	"MROT=rotationStatus" "MROT"
Default	"MROT=0"
Argument	Rotation Status: " 1" Accelerates the piston rotation. "-1" Decelerates (brakes) the piston rotation. " 0" Aborts current acceleration or deceleration
Remarks	The rotation of the PG9000 piston (with bell installed) may be controlled manually instead of using the auto rotate function (see the "AROT" command). The PG9000 will only rotate the piston if the bell is installed and the piston position is not close or against the top or bottom of the piston travel. This command is not typically used when the auto-rotate feature is enabled.
Example	Typical command: "MROT=1" Typical reply: "MROT=1"
Error	See Section 4.3.3 Error Messages ERR #1 The argument given is not "-1", "0" or a "1"
See Also	3.11.13, 3.11.8, "AROT"

MR	
Purpose	Read the current mass load variables.
Syntax	"MR"
Default	N/A
Argument	N/A
Remarks	The actual true mass value, main mass nominal value, and trim mass values of the mass currently loaded are retrieved with this command. The data is provided in the following comma delimited format: aa.aaaaaaa kg, mm.m kg, t.ttt g aa.aaaaaaa kg: The actual total true mass value. mm.m kg: The total of the main masses nominal values (mass $\geq$ 0.1 kg). t.tttg: The trim mass loaded. These values are the result of a user provided pressure request or mass request. Since the actual total true mass value is a result of the true mass values, it's resolution is not controlled by the "MRES" command.
Example	Typical command: ""MR" Typical reply: "20.687002 kg, 20.6 Kg, 77.000 g"
Error	None
See Also	3.6

© 1998-2010 Fluke Calibration

원문: Fluke Calibration PG9602/9607 메뉴얼(영문) · 제조사 원문 자료입니다. 사양은 제조사 사정에 따라 변경될 수 있습니다.

MS=	
Purpose	To set the nominal main (mass ≥ 0.1 kg) and trim mass to be loaded on PG9000. The actual mass value used is determined by the true mass values of the selected mass set.
Syntax	"MS=mm.m Kg, t.ttt g"
Default	N/A
Argument	mm.m kg: The total of the main masses nominal values to be loaded. t.ttt g: The trim mass to be loaded.
Remarks	The user may specify a target for PG9000 in mass or pressure. When a mass target is given, the selected mass set is used to determine the masses available for loading. PG9000 starts at the largest value smallest numbered main mass until enough mass has been found to satisfy the main mass request. The trim mass is then added to the total of the required true mass values. Then a series of actions may occur: 1. If auto rotate feature is enabled, the masses are decelerated to a stop. 2. If the auto generation piston raise feature is enabled, the piston is be lifted. 3. If an AMH mass handler is active, the appropriate mass is loaded. 4. If the auto generation is enabled, the external PPC attempts to float the piston. 5. If the automatic rotation is enabled, the masses are rotated when floating. 6. The PG9000 achieves a *Ready* condition at the requested mass load. This command replies before execution of the steps actually starts. The "PR" command can be used to monitor the status of these events and determine when the PG9000 measurement is *Ready*. The "ABORT" command or changing to local front panel operation using the **[ESC]** key, the LOCAL command or a GPIB go to local function stops the operation.
Example	Typical command: ""MS=5, 50" Typical reply: "5.0 kg, 50.000 g"
Error	See Section 4.3.3 Error Messages ERR #1 If the first argument is invalid ERR #2 If the second argument is invalid
See Also	3.11.12, 3.6, 3.11.11, 3.11.11.1, "PR" , "PS=" , "ABORT" , "AROT" , "PGEN"

OHMS	
Purpose	Read the mounting post PRT resistance(s).
Syntax	"OHMS"
Default	N/A
Argument	N/A
Remarks	The mounting post temperature is measured and used for internal calculations. This command always returns the last measured value using the internal PRTs. If the current Setup does not specify "INTERNAL" as the measurement source, this measurement is not made, and the value returned is a measurement made when the unit was powered up. The PG9000 uses two PRTs to independently measure the mounting post temperature ("PRT1" and "PRT2") while all other models use a single PRT ("PRT1").
Example	Typical command: "OHMS" Typical reply: "109.519 ohms, 110.995 ohms" (PG9607) "109.520 ohms (Other models)
Error	None
See Also	5.2.1.5

원문: Fluke Calibration PG9602/9607 메뉴얼(영문) · 제조사 원문 자료입니다. 사양은 제조사 사정에 따라 변경될 수 있습니다.

PASSTHRU*x*	
Purpose	To allow the host PC to communicate with a device connected to the PG9000 COM ports.
Syntax	"PASSTHRU*x* = *cmd*" "PASSTHRU*x*"
Arguments	*x*: 2, 3 or 4 to access the COM2, COM3 or COM4 ports. *cmd:* The command to send to the external device
Remarks	The COM2, COM3 and COM4 ports are used by the PG9000 to communicate with external devices. The PASSTHRU command allows direct communications with a device connected to one of these ports as long as the device is not actively being used by the PG (such as an active barometer or vacuum sensor on COM2 or a PPC pressure controller on COM3). The device must be set to the same port settings as the PG and accept a carriage return followed by a line feed as a terminator. When the PASSTHRU command is used to send a command to a device, any replies from the device will be passed back as a reply. This pass back function continues until any other command is sent to the PG9000. If the device does not reply, then no reply will be generated from the PASSTHRUx= command. The Query format (no argument) will allow the external device to pass replies back thru the PG9000 without issuing a command first. This continues until any other command is sent to the PG9000.
Example	Cmd sent: "PASSTHRU3=VER" Query reply: "FLUKE PPC4 VER1.01a" (device is a PPC4 on COM3)
Error	See Section 4.3.3 Error Messages ERR #1 Invalid port 'x' ERR#27 The device on the port is currently active
See Also	"COM*x*"

PCTx(=)	
Purpose	Set or read the source for the piston-cylinder temperature measurement. Also optionally sets the USER defined measurement.
Syntax	"PCTx=source, meas" "PCTx=source" "PCTx"
Default	20 °C if the source is DEFAULT
Argument	x: The setup number from 1 to 13. See the SETUP command. Setup is reserved for remote command use only. Source: The measurement source. This can be INTERNAL, NORMAL, or USER. Meas: The current measurement used. This can only be set if the source argument is USER. If specified, the limit for this argument is 0 to 40 °C
Remarks	PG9000 has two internal piston-cylinder mounting post PRT sensors, using the average of the two values for piston-cylinder temperature in calculations. Optionally another source may be used for this measurement. The measurement source can be the internal sensors, a user defined fixed value, or the normal value. The Setup number allows 13 separate configurations for each sensor. The SETUP command selects which of the 13 to use. Setup number 1 is restricted as INTERNAL only to serve as manufacturer's fixed Setup, and cannot be changed. The meas argument is used to allow the user to define a fixed value if the source is set to USER. The reply will always include the source and the meas fields.
Example	Typical command: "PCT2=USER,25" Typical reply: "USER,25dC" Typical command: "PRT9=INTERNAL" Typical reply: "INTERNAL, 21.34 dC"
Error	See Section 4.3.3 Error Messages ERR #1 The setup number x is invalid ERR #2 The source argument is invalid ERR #3 The meas argument is invalid
See Also	3.12, 1.2.1.3, "SETUP"

© 1998-2010 Fluke Calibration

원문: Fluke Calibration PG9602/9607 메뉴얼(영문) · 제조사 원문 자료입니다. 사양은 제조사 사정에 따라 변경될 수 있습니다.

we measure, we calibrate, we validate.
KOLAS 국제공인교정기관 · ISO/IEC 17025

PGEN(=)	
Purpose	Set or read the piston float target for automatic piston floating (using an external pressure generation/control component). Also can turn the automated pressure generation function OFF and ON.
Syntax	"PGEN=m.m" "PGEN"
Default	PGEN=0.0 (off)
Argument	N/A
Remarks	An external pressure generation/control component can be used to automatically float the PG9000 piston. This command specifies the piston position to which the automated pressure generation function sets the piston when floating or refloating it. The auto generation stops pressure control once the piston passes the piston float target and then does not control again until the piston falls outside of the piston position "Ready" limits (see PISTONRDY cmd). Setting PGEN to 0 turns OFF automated pressure generation in the same manner as turning it OFF locally from the PG Terminal. The pressure generation/control component should be "configured" (see pressure generation/control component Operation and Maintenance Manual) and the "PGEN" command should be issued whenever the Device Under Test is changed or the piston is changed.
Example	Typical command: "PGEN=1.5" Typical reply: "PGEN=1.5mm"
Error	See Section 4.3.3 Error Messages ERR #1 The argument is invalid
See Also	3.11.9, "PPC", "READYx"

PISTONRDYx(=)	
Purpose	Read or set a piston-cylinder module's rotation rate limits.
Syntax	"PISTONRDYx=MinRPM, MaxRPM "PISTONRDYx"
Default	N/A
Argument	MinRPM: The minimum allowed rotation speed at which the measurement becomes *Ready* [rpm]. If autorotate is enabled, this is also the point at which the rotation system will engage. This does not apply if the bell is not loaded. MaxRPM: The target maximum rotation rate when automated rotation engages to rotate the piston. This does not apply if the bell is not loaded.
Remarks	There are a number of conditions to allow the PG9000 measurement to become *Ready*. These two piston-cylinder module dependent limits determine when the rotation rate is in the correct limits.
Example	Typical command: "PISTONRDY1" Typical reply: "10, 50"
Error	See Section 4.3.3 Error Messages ERR #1..2 x invalid first or second argument
See Also	3.4, 3.4.2, 3.13.1.1, "READYx"

PISTONVARx(=)	
Purpose	Read or set a piston-cylinder module's characteristics.
Syntax	"PISTONVARx=Sn,PCalpha,CylAlpha,DefCoef,Tension,Offset, k (P)" "PISTONVARx"
Default	N/A
Argument	x: The piston-cylinder number 1, 2, or 3 Sn: The piston-cylinder serial number (4 digits max) Pcalpha: The piston temperature coefficient CylAlpha: The cylinder temperature coefficient DefCoef: The piston-cylinder Ae pressure coefficient Tension: The surface tension Offset: The reference level offset from the mounting post reference mark
Remarks	You may define up to seventeen different piston-cylinder sets to use with PG9000 using the PISTONx, and the PISTONVARx command is then used to edit the piston-cylinder set physical information.
Example	Typical command: "PISTONVAR1" Typical reply: 225, 5.5000 E-6/dC, 4.5000 E-6/dC, 5.3800 E-6/MPa, 0.0000000, 32.4600mm , 0.000 E-6
Error	See Section 4.3.3 Error Messages ERR #1..7 x invalid first through seventh argument
See Also	3.13.1.1

원문: Fluke Calibration PG9602/9607 메뉴얼(영문) · 제조사 원문 자료입니다. 사양은 제조사 사정에 따라 변경될 수 있습니다.

PISTONx(=)	
Purpose	Read or set a piston-cylinder module's general information.
Syntax	"PISTONx=Sn,Area,Mass,Density,CalCert#,CertDate; EditDate" "PISTONx"
Default	n/a
Argument	x: The piston-cylinder module number 1 through 17 Sn: The piston-cylinder module serial number Area: The piston-cylinder module effective area (mm2) Mass: The piston assembly mass (kg) Density: The piston assembly apparent density (kg/m3) CalCert#: The calibration report number (10 digits max) CertDate: The calibration report date (YYYYMMDD) EditDate: The date that this data was last edited
Remarks	You may define up to seventeen different piston-cylinder sets to use with the PG9000 using the PISTONx, and PISTONVARx commands. The PISTONx command is used to edit the piston-cylinder set general information.
Example	Typical command: "PISTON1" Typical reply: "225, 196.110000 mm2, 0.200000kg, 4233.0Kg/m3, 100, 20080115, 20080120
Error	See Section 4.3.3 Error Messages ERR #1..7 x invalid first through seventh argument
See Also	3.13.1, 3.13.1.1, "PISTONVARX (=)"

PISTON(=)	
Purpose	Read or set the current piston-cylinder module.
Syntax	"PISTON=n" "PISTON"
Default	N/A
Argument	n: The piston-cylinder module number 1 through 17.
Remarks	You may define up to seventeen different piston-cylinder modules to use with PG9000 using the PISTONx and PISTONVARx commands. The PISTON(=) commands are then used to select the currently active piston-cylinder module. A piston-cylinder module must be defined before selecting it.
Example	Typical command: "PISTON" Typical reply: "PISTON=1"
Error	See Section 4.3.3 Error Messages ERR #1 n invalid or specifies a piston-cylinder set that is not defined
See Also	3.11.2, 3.13.1.5

PPC(=)	
Purpose	Send a command to an external pressure generation/control component connected to COM3 of the PG9000.
Syntax	"PPC=xxx"
Default	N/A
Argument	N/A
Remarks	This command allows communications to an external pressure generation/control component through COM3 of PG9000. COM3 must be previously set up to the correct settings to match the pressure generation/control component R2323 interface. The PG9000 auto pressure generation should be disabled before using the PPC(=) command (see the "PGEN" command) to prevent interference with the PPC's auto generation functions. Any reply from the component will be returned until another command is sent to the PG9000.
Example	Typical command: "PPC=PR" Typical reply: "R 561.0 psi a"
See Also	3.11.9, "PGEN", "PPCPR"

PPCPR	
Purpose	Read the most recent pressure measurement from an external PPC pressure controller.
Syntax	"PPCPR"
Remarks	The PPCPR command can be used when PG9000's automated pressure generation and control function is active or inactive. The external PPC's COM1 port must be connected into the PG9000's COM3 port, and the PPC's COM1 settings and the PG9000's COM3 settings must match. If the PG9000 has a previous PPC measurement that is less than 5 seconds old, it will be replied. Otherwise, a current measurement will be obtained from the PPC for the reply. The reply is in the active pressure unit of measure.
Example	Typical command: "PPCPR Typical reply: "10.030210"
Error	ERR #13 PPC did not respond.
See Also	3.11.9, "COM3", "PPC="

© 1998-2010 Fluke Calibration

원문: Fluke Calibration PG9602/9607 메뉴얼(영문) · 제조사 원문 자료입니다. 사양은 제조사 사정에 따라 변경될 수 있습니다.

PPOS	
Purpose	Read the current piston position and rate of vertical movement.
Syntax	"PPOS"
Default	N/A
Argument	N/A
Remarks	The PG9000 piston position has a total travel of 9 mm. This piston position is represented from -4.5 mm (all the way down, LSTOP) to 4.5 mm (all the way up, HSTOP). This measurement is updated every 200 milliseconds, along with the piston drop rate which is updated when the system is stable. These two fields are comma delimited.
Example	Typical command: "PPOS" Typical reply: "-3.44 mm, 0.5 mm/min"
Error	None
See Also	3.5, 3.11.5, 3.11.5.1

PR	
Purpose	Read the current calculated pressure value and *Ready/Not Ready* status.
Syntax	"PR"
Default	N/A
Argument	N/A
Remarks	The current pressure resulting from the mass loaded is calculated every 2 seconds. It is displayed in the current pressure units. The data string also contains ready information. The string is in the format "ssx ddddddd uuuum". "ss": The first two characters indicate the ready status. This is determined by the piston position, rotation speed, AMH automated mass handler status, and the pressure generation status: "R " for *Ready*, "NR" for *Not Ready*. "x": This 3rd character indicates any ongoing activity by the PG9000 to reach a *Ready* condition. Any character except a " " (whitespace) will keep the PG ready status *Not Ready* ("NR"): " " no activity. "A" the auto rotate feature is accelerating mass rotation. "D" the auto rotate feature is decelerating mass rotation before a mass load occurs. "R" the piston is being raised by a pressure controller before a mass load occurs. "L" AMH automated mass handler is busy loading the required mass load. "W" AMH has completed a mass load and is waiting for a "RESUME" command to continue operations. "E" an AMH error has occurred. You can use the "AMHERR" command to get further AMH error information. "V" the PG is in absolute by vacuum mode and waiting to reach the required vacuum limit before continuing. Current residual pressure exceeds the vacuum limit. "ddddddd": This 8 digit numeric field indicates the current calculated pressure in the current pressure units. It has 3 leading spaces before it. "uuuu": This 4 character field indicates the current pressure unit.(see "UNIT") "m": This character indicates the measurement mode. (see "MMODE").
Example	Typical command: "PR" Typical reply: "NR 7.003647 kPa g" (not ready) "R 7.003647 kPa g" (ready) "NRL 7.003647 kPa g" (not ready, busy loading mass)
Error	None
See Also	3.4, 3.11.8, 3.11.9, 3.11.11, "MS=", "PS=", "RESUME", "AMHERR"

원문: Fluke Calibration PG9602/9607 메뉴얼(영문) · 제조사 원문 자료입니다. 사양은 제조사 사정에 따라 변경될 수 있습니다.

PRTPC*n*	
Purpose	Set or read the mounting post PRT temperature sensor calibration data.
Syntax	"PRTPC*n*=Sn, slope, zero, report number, cal date" "PRTPC=Sn, slope, zero, report number, cal date" "PRTPC*n*" "PRTPC"
Suffix	*n*: '1' to access PRT1, '2' to access PRT2. Optional (defaults to '1')
Default	1, 0.3896, 100.00, 1, 19880101
Argument	Sn: The serial number from 0 to 9999 slope: The PRT slope (Ohms/0 °C) zero: The PRT resistance at 0 °C cert number: The calibration report number cal date The calibration date (yyyymmdd)
Remarks	The mounting post PRT data can be read or set using this command. Care must be taken to ensure that this data is not overwritten. PG9607 has two piston-cylinder mounting post PRTs. All other PG9000 models have one piston-cylinder mounting post PRT.
Example	Typical command: "PRTPC1" Typical reply: "103, 0.3896 ohms/dC, 99.999500 ohms, 1001, 20080115
Error	See Section 4.3.3 Error Messages ERR #1..5 If the arguments are missing or invalid ERR #7 The date is invalid
See Also	5.2.1, 5.2.1.5

PS=	
Purpose	To set a new PG9000 target pressure.
Syntax	"PS=targ"
Default	N/A
Argument	N/A
Remarks	The pressure command is interpreted in the current pressure unit of measure. If a pressure is requested that is not in the range of operation, the pressure request is not implemented and an error message is returned. The mass load needed to set the pressure is calculated using the current mass loading resolution and the measured pressure resulting from this mass is calculated. . Then a series of actions can occur: 1. If the auto rotate feature is enabled, the masses are decelerated to a stop. 2. If the auto generation piston raise feature is enabled, the piston is lifted. 3. If an AMH automated mass handler is active, the appropriate mass is loaded. 4. If an AMH is active and the mass resolution is set to less than 100g, the PG9000 waits for the "RESUME" command to be sent before proceeding. This gives the host program the opportunity to instruct the operator to load trim mass before pressure generation and piston rotation proceed. 5. If auto generation is enabled, the external PPC attempts to float the piston. 6. If the automatic rotation is enabled, the masses are rotated when floating. This command replies before these actions actually start. The "PR" command can be used to monitor the status of these events and determine when the PG9000 measurement is actually *Ready*. The "ABORT" command or changing to local front panel operation using the **[ESCAPE]** key, the LOCAL command or a GPIB go to local function will stop the operation.
Example	Typical command: "PS=100" Typical reply: "100.0000 kPa g"
Error	See Section 4.3.3 Error Messages ERR #1 If target results in an invalid mass load
See Also	3.11.11, 3.11.12, 3.11.10, 3.11.3, "MS=", "PR", "UNIT=", "RESUME"

© 1998-2010 Fluke Calibration

원문: Fluke Calibration PG9602/9607 메뉴얼(영문) · 제조사 원문 자료입니다. 사양은 제조사 사정에 따라 변경될 수 있습니다.

READYx(=)	
Purpose	Set or read the ready criteria for a specific "Setup"
Syntax	"READYx=USER, RdyBand, RdyVac" "READYx="DEFAULT" (specifies to use fixed defaults) "READYx"
Default	"READYx=USER, 2.5mm, 5Paa"
Argument	x: The setup number whose ready criteria are to be accessed (1 to 13) RdyBand: Piston position "ready band" (±mm) VacLim: The vacuum ready limit (Paa)
Remarks	The PG9000 uses the piston position and the vacuum measurement (in absolute by vac mode) to determine if the *Ready/Not Ready* condition. Other factors can also keep the PG9000 measurement from being *Ready* (such as an active external pressure controller, active rotation system, active AMH automated mass handler). The piston position must be within the ready band ("RdyBand") to allow a ready condition. In absolute by vacuum measurement mode, the vacuum measurement must also be below the Vacuum Limit ("VacLim"). Each "Setup" defined for the PG9000 can have a different set of *Ready/Not Ready* criteria. If DEFAULT settings are specified, then the values are fixed and cannot be changed. The piston position ready limits define the piston position beyond which the GEN function refloats the piston when GEN is ON. Piston rotation rate limits are in the individual piston-cylinder file.
Example	Typical command: "READY2=USER, 3, 10" Typical reply: "USER, 3.0mm, 10Paa"
Error	See Section 4.3.3 Error Messages ERR #1,2,3,4 Invalid arguments
See Also	3.4, 3.13.1.1, "SETUP", "VACP", "PISTONRDYx(=)", "READYCK(=)"

READYCK(=)	
Purpose	To set or check the ready check flag, or, used to determine if a *Not Ready* condition has occurred.
Syntax	"READYCK=1" "READYCK"
Default	READYCK=0
Argument	N/A
Remarks	The internal ready check flag is cleared whenever PG9000 reaches a *Not Ready* (NR) condition. The "READYCK" command will return the status of this flag. This flag can be set only by sending the "READYCK=1" command while PG9000 is in a *Ready* condition. If you send the "READYCK=1" command when PG9000 is in a *Not Ready* (NR) condition, the reply will be "READYCK=0". If you set READYCK=1 when PG9000 achieves a *Ready* (R) condition, you can use READYCK later to determine if a *Not Ready* (NR) condition has occurred. If NR has occurred READYCK returns "0". If NR has not occurred READYCK returns "1".
Example	Typical command: "READYCK=1" Typical reply: "READYCK=1" (If PG9000 condition is *Ready*) Typical reply: "READYCK=0" (if PG9000 condition is *Not Ready*)
Error	See Section 4.3.3 Error Messages ERR #1 If n is not a 1
See Also	3.4

REMOTE	
Purpose	To place PG9000 into a remote lock-out mode.
Syntax	"REMOTE"
Default	N/A
Argument	N/A
Remarks	A REMOTE command deactivates the front panel. All front panel controls will be disabled. The REMOTE command can only be canceled by a LOCAL command or by turning off PG9000 power then reapplying it.
Example	Typical command: "REMOTE" Typical reply: "REMOTE"
Error	None
See Also	LOCAL

© 1998-2010 Fluke Calibration

원문: Fluke Calibration PG9602/9607 메뉴얼(영문) · 제조사 원문 자료입니다. 사양은 제조사 사정에 따라 변경될 수 있습니다.

RESET	
Purpose	To reset all operating parameters to factory default settings.
Syntax	"RESET"
Default	N/A
Argument	N/A
Remarks	The reset command can be given to return the PG9000 to a known state. This command is the same as locally executing a "Reset Sets".
Example	Typical command: "RESET" Typical reply: "RESET"
Error	None
See Also	3.13.9.1

RESUME(=*mode*)	
Purpose	Sets the resume "mode".
Syntax	"RESUME=*mode*"
Default	"RESUME=1"
Argument	*Mode:* '0' "RESUME" command is not needed to complete a remote pressure set operation . '1' "RESUME" command is needed to complete any remote pressure set operation
Remarks	"RESUME=1" is needed only if it is necessary for PG9000 operation to pause after a pressure target has been given to allow the operator to load mass. This is the case when using a manual mass set or when using AMH automated mass handling and manually loading trim masses.
Example	Typical command: "RESUME=1" Typical reply: "RESUME=1"
Error	None
See Also	3.11.11, 3.4, "PS=", "RESUME"

RESUME	
Purpose	Resume the suspended process of setting a pressure.
Syntax	"RESUME"
Default	N/A
Argument	N/A
Remarks	When "RESUME=1" using RESUME*(=mode),* after setting a new target pressure using the "PS=" command, the process of setting the pressure is suspended after the PG9000 calculates the new target mass load (and loads the if an AMH automatic mass handler is active). The pause is too allow a host program to instruct the operator to load trim mass if desired. The RESUME command ends the pause, allowing the auto-rotate and auto-generate functions to execute is enabled. The activity status field of the "PR" field can be used to determine when the PG9000 has suspended operation and is waiting for the "RESUME" command.
Example	Typical command: "RESUME" Typical reply: "RESUME"
Error	None
See Also	3.11.11, 3.4, "PS=", "PR=", "RESUME*(=mode)*"

SETUP(=)	
Purpose	To change or read the current SETUP to be used.
Syntax	"SETUP=n" "SETUP"
Default	"SETUP=1"
Argument	N/A
Remarks	Up to 13 SETUP files can be created by the user to allow quick change from one configuration of pressure calculation sources to another. Each configuration can specify the source of the ambient measurements, the gravity, and the *Ready/Not Ready* criteria. The "AMBHx", "AMBPx", "AMBTx", "READYx", "VACP" and "PCTX" commands reference the SETUP command. The first setup ("SETUP=1") is reserved for the factory default setup, and cannot be changed. Selecting a setup that references an external device (barometer or vacuum gauge) can take up to 5 seconds to reply.
Example	Typical command: "SETUP=2" Typical reply: "2"
Error	See Section 4.3.3 Error Messages ERR #1 If setup is invalid ERR #13 Setup requires use of external device which is not responding.
See Also	3.12, "AMBHx", "AMBPx", "AMBTx", "READYx", "VACP", "PCT"

© 1998-2010 Fluke Calibration

원문: Fluke Calibration PG9602/9607 메뉴얼(영문) · 제조사 원문 자료입니다. 사양은 제조사 사정에 따라 변경될 수 있습니다.

SN	
Purpose	To read the PG9000 serial number.
Syntax	"SN"
Default	N/A
Argument	N/A
Remarks	Each PG9000 is assigned a serial number. This command reads this number back.
Example	Typical command: "SN" Typical reply: "201"
Error	None

SPEED	
Purpose	To read the current piston rotation speed and rotation decay (deceleration).
Syntax	"SPEED"
Default	N/A
Argument	N/A
Remarks	The current piston rotation speed and decay rate are returned separated by a comma. The decay rate is returned as '0' if there is not enough valid data to calculate the rate. The speed will also be returned as '0' if the bell is not installed.
Example	Typical command: "SPEED" Typical reply: "44.2 rpm, 2.3 rpm/min
Error	None
See Also	3.11.5

TIME(=)	
Purpose	To read or set the internal real time clock.
Syntax	"TIME=HH:MMxp" "TIME"
Default	N/A
Argument	The time is in the HH:MMxp format. HH: The hour 1 to 12 MM: The minute 00 to 59 xp: "am" or "pm"
Remarks	The internal time clock is part of the internal calendar. The seconds are always set to "00" when setting the time.
Example	Typical command: "TIME=8:31PM" Typical reply: "8:31pm"
Error	See Section 4.3.3 Error Messages ERR #1 If invalid time argument
See Also	3.13.4.3

UCOEF	
Purpose	To read the conversion coefficient used to convert Pascal to the current pressure unit of measure.
Syntax	"UCOEF"
Default	N/A
Argument	N/A
Remarks	Use this command to read the pressure conversion coefficient used to convert pressure in Pascal to the displayed pressure units. Pressure in Pascal multiplied by this coefficient yields the pressure in the PG9000 units.
Example	Typical command: "UCOEF" (current units are "kPa") Typical reply: "1.000000e-003"
Error	None
See Also	7.1.1, 3.11.3, "UNIT"

원문: Fluke Calibration PG9602/9607 메뉴얼(영문) · 제조사 원문 자료입니다. 사양은 제조사 사정에 따라 변경될 수 있습니다.

UDD(=)	
Purpose	To set or retrieve the settings for the user defined external barometer.
Syntax	"UDD=label,reqstr,skip,coef" "UDD"
Default	N/A
Argument	label: A user defined barometer label to identify this setup (1 to 3 ASCII char). Reqstr: The text string to be sent to the external barometer every 2 seconds to query it for a pressure measurement. It must consist of up to 20 printable ASCII characters only. skip: The number of leading characters to ignore from the external barometer's reply. coef: The pressure conversion coefficient that PG9000 will multiply the external barometer reply by to result in a measurement in Pascal.
Remarks	An external barometer must be defined first by the user before being selected to be used as source for atmospheric pressure values instead of the PG9000 internal barometer. The external barometer must accept the carriage return/line feed terminated request string every 2 seconds, and reply with a carriage return or carriage return/line feed terminated reply within the 2 second cycle. The COM2 port must also be setup properly according to the barometer's communications settings. After setting up the COM2 port and defining the device, use the "AMBPx" and "SETUP" commands to direct PG9000 to use the external barometer to use the device as the source of atmospheric pressure values.
Example	Typical command: "UDD=DEV, PR, 4, 1000" (ext barometer is in kPa) Typical reply: "DEV, PR, 4, 1000.000"
Error	See Section 4.3.3 Error Messages ERR #1 label must not exceed 3 characters ERR #2 request string must not exceed 20 characters ERR #3 # of char to ignore must be 1 to 80 ERR #4 user defined coefficient cannot be 0
See Also	3.13.5.4, 3.12, "AMBPx", "SETUP"

UDU(=)	
Purpose	To set or retrieve the user defined unit (use defined pressure unit of measure).
Syntax	"UDU=uuuuu,cccccc" "UDU"
Default	UDU not defined
Argument	uuuuu= User unit label (five characters maximum) ccccc= User coefficient (cannot be <=0)
Remarks	The *user coefficient* (UCOEF) is a value that is used to convert the current pressure units to Pascal. Up to 4 characters may be assigned for the unit label. When selecting the unit to choose using the "UNIT" command, add a trailing 'a' to specify an absolute unit, else the unit will be a gauge unit.
Example	Typical command: "UDU=MyUn,.0015" Typical reply: "MyUn,.0015" Pressure in Pa = pressure in units/UCOEF
Error	See Section 4.3.3 Error Messages ERR #1 uuuuu must not exceed 4 characters ERR #2 user defined coefficient cannot be 0
See Also	3.11.3.1, 7.1.1, "UNIT", "UCOEF"

© 1998-2010 Fluke Calibration

원문: Fluke Calibration PG9602/9607 메뉴얼(영문) · 제조사 원문 자료입니다. 사양은 제조사 사정에 따라 변경될 수 있습니다.

we measure, we calibrate, we validate.
KOLAS 국제공인교정기관 · ISO/IEC 17025

UDV(=)	
Purpose	To set or retrieve the settings for the user defined external vacuum gauge.
Syntax	"UDV=label,reqstr,skip,coef" "UDV"
Default	N/A
Argument	label: A user defined vacuum gauge label to identify this setup (1 to 3 ASCII char). Reqstr: The text string to be sent to the external vacuum gauge every 2 seconds to query it for a pressure measurement. It must consist of up to 20 printable ASCII characters only. skip: The number of leading characters to ignore from the external vacuum gauge's reply. coef: The pressure conversion coefficient that PG9000 will multiply the external vacuum sensor's reply by to result in a measurement in Pascal.
Remarks	An external vacuum gauge must be defined before being selected as a source of vacuum pressure under the PG9000 bell jar. The external vacuum gauge must accept the carriage return/line feed terminated request string every 2 seconds, and reply with a carriage return or carriage return/line feed terminated reply within the 2 second cycle. The COM2 port must also be setup properly according to the vacuum gauge's communications settings. After setting up the COM2 port and defining the device, use the "VACPx" and "SETUP" commands. It is possible to read both an external barometer and an external vacuum sensor with the PG COM2 port. The barometer must be an RPM3 or RPM4 plugged into the PG COM2 port, and selected as an active external barometer. The vacuum sensor is then plugged into the RPM3/RPM4's COM2 port. The RPM3/RPM4's COM2 port must be set to the same settings as the vacuum sensor.
Example	Typical command: "UDV=DEV, PR, 4, 100" (ext vacuum sensor is in mbar) Typical reply: "DEV, PR, 4, 100.0000"
Error	See Section 4.3.3 Error Messages ERR #1 label must not exceed 3 characters ERR #2 request string must not exceed 20 characters ERR #3 # of char to ignore must be 1 to 80 ERR #4 user defined coefficient cannot be 0
See Also	3.13.5.5, 3.12, "VACPx", "SETUP", "COM2"

UL(=)	
Purpose	Set or read the upper limit of an external pressure generation/control component.
Syntax	"UL=xxxx" "UL"
Default	Default N/A.
Argument	xxxx= Controller's upper limit in the controller's pressure units
Remarks	An external pressure controller can have an upper limit set to prevent accidental overpressure conditions. The controller must be properly initialized prior to using this command. The reply will be in the controller's format. Please consult the controller's Operation and Maintenance Manual, UL Section, for details about its upper limit and "UL" reply.
Example	Typical command: "UL=1000" Typical reply: "1000.00 kPa g"
Error	See the controller's manual for details about its "UL" command. ERR #13 External controller not detected
See Also	3.11.9.3 "PGEN"

원문: Fluke Calibration PG9602/9607 메뉴얼(영문) · 제조사 원문 자료입니다. 사양은 제조사 사정에 따라 변경될 수 있습니다.

UNIT(=)	
Purpose	Set or change the current pressure unit of measure and pressure measurement mode.
Syntax	"UNIT=xxxxx" "UNIT"
Default	"UNIT=MPa g" "UNIT=kPa g"
Argument	N/A
Remarks	The units in which PG9000 interprets and executes commands can be changed. The available units are: psi g psi a psi d psf g psf a psf d bar g bar a bar d mbarg mbara mbard Pa g Pa a Pa d kPa g kPa a kPa d MPa g MPa a MPa d MmHgg mmHga mmHgd InHgg inHga inHgd InWag inWaa inWad MmWag mmWaa mmWad kcm2g kcm2a kcm2d Torrg Torra Torrd mTorg mTora mTord Mm (altitude available only with a vac reference) Ft (altitude available only with a vac reference) Xxxxg xxxxa Xxxxd The gauge/absolute/differential trailing designator 'g', 'a' or 'd', always appears in the 5th character position. The gauge unit trailing designator 'g' does not have to be given to specify a gauge unit.
Example	Typical command: "UNIT=mbar" Typical reply: "mbarg"
Error	See Section 4.3.3 Error Messages ERR #1 Invalid unit specified ERR #20 Vacuum must be enabled with absolute unit
See Also	3.11.3, 3.11.4, "UDU", "UCOEF", "MMODE"

VACPx(=)	
Purpose	Set or read the source for the vacuum pressure measurement. Also optionally sets the USER defined measurement.
Syntax	"VACPx=source, meas" "VACPx=source" "VACPx
Default	INTERNAL
Argument	x: The Setup number from 1 to 13. See the SETUP command. source: The measurement source. This can be DFLT, COM2, NORMAL, USER, RPM or the user defined vacuum "label" meas: The current measurement used in Paa. This can only be set if the source argument is USER. If specified, the limit for this argument is 0 to 99 Paa.
Remarks	The PG9000 optional vacuum reference hardware includes an vacuum pressure gauge, designated "DFLT", as the source of the bell jar vacuum reference values. Alternately, a different source may be used for this measurement. The range of the standard vacuum gauge supplied with the vacuum reference hardware (DFLT) is 0 to 13.3 Pa absolute. The vacuum pressure measurement source can be the standard gauge (DFLT), a user defined fixed value, the fixed normal value, an external **DH Intruments** RPM or a user defined external vacuum gauge. If an external RPM or a user defined external vacuum is chosen, the COM2 port must be set up. Set up COM2 before selecting the PG9000 SETUP to activate the device. If "RPM" or the user defined barometer "label" is specified then all other source setups set to "RPM" will change to this source, as it is a global selection. The SETUP function allows 13 separate source configurations for the various SETUP variables to be saved in 13 files. The SETUP command selects which of the files to make active. The SETUP command selects which of the 13 to use. Setup number 1 is restricted as INTERNAL only to serve as a manufacturer's fixed Setup, and cannot be changed.
Example	Typical command: "VACP2=USER,10" Typical reply: USER, 10.0 Paa" Typical command: "VACP9=DFLT" Typical reply: "DFLT, 3.200 Paa"
Error	See Section 4.3.3 Error Messages ERR #1 The setup number x is invalid ERR #2 The source argument is invalid ERR #3 The meas argument is invalid
See Also	3.12, 3.13.5.5, "SETUP", "COM2", "UDV"

 © 1998-2010 Fluke Calibration

원문: Fluke Calibration PG9602/9607 메뉴얼(영문) · 제조사 원문 자료입니다. 사양은 제조사 사정에 따라 변경될 수 있습니다.

VAC(=)	
Purpose	To set or read PG9000 reference mode.
Syntax	"VAC=n" "VAC"
Default	VAC=0
Argument	n = 1: PG9000 is being operated with a bell jar and vacuum n = 0: PG9000 is being operated at atmospheric pressure
Remarks	It is recommended to set the reference mode with the MMODE command instead of VAC(=) and to use VAC(=) for query only . The PG9000 reports measured vacuum only when operation with a vacuum is specified, with the VAC command or by mode (absolute by vac or differential).
Example	Typical command: "VAC=1" Typical reply: "VAC=1"
Error	See Section 4.3.3 Error Messages ERR #1 If n not set to 1 or 0
See Also	3.11.4, "MMODE"

VENT(=)	
Purpose	To vent the test pressure to atmosphere if an automated pressure generation/control component is being used for automatic pressure generation.
Syntax	"VENT=n"
Default	VENT=0
Argument	n = 1: Activates the vent procedure on an automated pressure generation/control component n = 0: Closes exhaust valve on an automated pressure generation/control component
Remarks	When n = 1 the external automated pressure generation/control component test pressure will quickly decrease to atmospheric.
Example	Typical command: "VENT=1" Typical reply: "VENT=1"
Error	See Section 4.3.3 Error Messages ERR #1 If n not set to 1 or 0
See Also	3.11.9, "PPC", "PGEN"

VER	
Purpose	Read the version number of the internal software.
Syntax	"VER"
Default	N/A
Argument	N/A
Remarks	The version of the software installed in the PG9000 FLASH can be read.
Example	Typical command: "VER" Typical reply: "FLUKE PG9607 Ver3.00"
Error	None

원문: Fluke Calibration PG9602/9607 메뉴얼(영문) · 제조사 원문 자료입니다. 사양은 제조사 사정에 따라 변경될 수 있습니다.

4.4 Status System

The status system includes the status reporting system which reports general PG9000 events. The user can select which PG9000 events will cause a status change event. These events are then reported to the status system (bit7 and bit3 of the status byte register), which also must be configured for the STATus subsystem to generate the service requests described in Section 4.4.1, Status Reporting System.

There are two 16 bit event registers that make up the top layer of the status subsystem. The OPERation status register handles conditions that are normal for PG9000. The QUEStionable status register handles events that could cause measurements to be made under questionable conditions.

Other registers layered below these two registers provide the structure necessary to handle the two RPT channels and to enable the events and event transitions. Bit15 of all of these registers is not used because Bit15 represents a sign bit on some computer systems.

4.4.1 Status Reporting System

The PG9000 status reporting system is used to track and report system status and errors. The status subsystem is layered under and reports to the status reporting system. It follows the model of the IEEE Std 488.2 and works for the COM1 and the IEEE-488 port with slight differences. PG9000 can be programmed to respond to various status conditions by asserting the SRQ of the IEEE-488 interface. The COM1 port cannot be supported in this manner, so polling must be used.

4.4.1.1 Status Byte Register

PG9000 contains an 8 bit status byte register that reflects the general status of PG9000.

Table 23. Status Byte Register

OPER (128)	RQS/MSS (64)	ESB (32)	MAV (16)	N/A (8)	ERROR (4)	N/A (2)	RSR (1)

This register is affected by the PG9000 reply output queue, the error queue, the Standard Event Status register, the Ready Event Status register, and the STATus subsystem.

(“∗STB?” or “∗SRE *n*”)

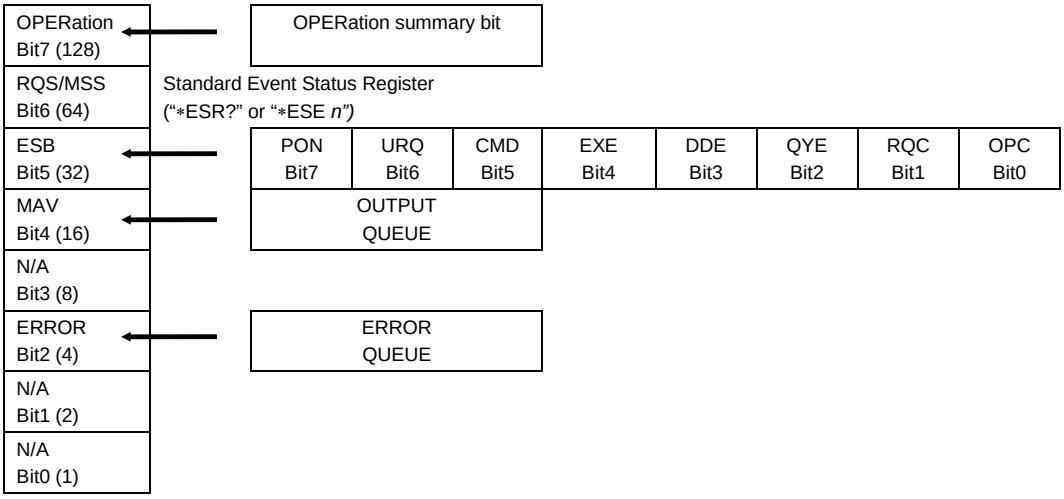

Figure 16. Status Byte Register

© 1998-2010 Fluke Calibration

원문: Fluke Calibration PG9602/9607 메뉴얼(영문) · 제조사 원문 자료입니다. 사양은 제조사 사정에 따라 변경될 수 있습니다.

we measure, we calibrate, we validate.
㈜테솔 · www.tessol.com TS-TL-FLK-082 161 / 192
KOLAS 국제공인교정기관 · ISO/IEC 17025

TESSOL Technical Library
TS-TL-FLK-082

The status byte register can be read using the "*STB?" query, or by performing a serial poll on the IEEE-488 bus. If you read this using a serial poll then bit 6 is the RQS. If the "*STB?" query is used, then bit 6 is the MSS bit. All of the other bits are common to both types of query.

Each of these status bits can cause an SRQ to occur. The Service Request Enable Register ("*SRE" program message) determines which of these flags are able to assert the SRQ line. This enabled register has a matching set of bits that each will enable the designated bit to cause an SRQ, except for the RQS/MSS bit(s) which cannot cause an SRQ. If you set this register to 20 ($14 hex), an SRQ will occur if the MAV or the ERROR bit are set. The description of these bits are given as:

- **OPER**: OPERational event register summary bit (Bit 7)

  This bit is not supported by PG9000.
- **RQS**: Requested Service (Bit 6)

  Indicates that the SRQ line of the IEEE-488 interface has been asserted by PG9000. This bit is cleared when a serial poll is performed on PG9000, and is a part of the status byte register when read using a serial poll. This bit does not apply if the COM1 port is being used.
- **MSS**: Master Summary Status (Bit 6)

  Indicates that an event or events occurred that caused PG9000 to request service from the Host, much like the RQS bit. Unlike the RQS bit, it is READ ONLY and can be only cleared when the event(s) that caused the service request are cleared.
- **ESB**: Event Summary Bit (Bit 5)

  Indicates if an enabled bit in the Standard Event Status Register became set. (See the section below.)
- **MAV**: Message Available Bit (Bit 4)

  Indicates that at least one reply message is waiting in the PG9000 IEEE-488 output queue.
- **ERR**: Error Queue not empty (Bit 2)

  Indicates that at least one command error message is waiting in the PG9000 IEEE-488 error message queue. Use the "SYSTem:ERRor?" query to get this message.

원문: Fluke Calibration PG9602/9607 메뉴얼(영문) · 제조사 원문 자료입니다. 사양은 제조사 사정에 따라 변경될 수 있습니다.

TS-TL-FLK-082

we measure, we calibrate, we validate.
㈜테솔 · www.tessol.com TS-TL-FLK-082 162 / 192
KOLAS 국제공인교정기관 · ISO/IEC 17025

4.4.1.2 Standard Event Register

PG9000 contains an 8 bit Standard Event Register that reflects specific PG9000 events. Enabled events in this register will set or clear the ESB bit of the status byte register.

Table 24. Standard Event Register

PON (128)	URQ (64)	CMD (32)	EXE (16)	DDE (8)	QYE (4)	RQC (2)	OPC (1)

This register can be read using the "*ESR?" query. Each of these status bits can set the ESB bit of the status byte register, causing a SRQ to occur IF the ESB bit is enabled to do so. The Standard Event Status Enable Register ("*ESE" program message) determines which of these flags are able to assert the ESB bit. The description of these bits are given as:

- **PON**: Power On (Bit 7)

  Indicates that the PG9000 power has been cycled since the last time this bit was read or cleared.
- **URQ**: User Request (Bit 6)

  Indicates that PG9000 was set to local operation manually from the front panel by the user (pressing the ESC key).
- **CMD**: Command Error (Bit 5)

  Indicates that a remote command error has occurred. A command error is typically a syntax error in the use of a correct program message.
- **EXE**: Execution Error (Bit 4)

  Indicates if a remote program message cannot be processed due to device related condition.
- **DDE**: Device Dependent Error (Bit 3)

  Indicates that an internal error has occurred in PG9000 such as a transducer time-out.
- **QYE**: Query Error (Bit 2)

  Indicates that an error has occurred in the protocol for program message communications. This is typically caused by a program message being sent to PG9000 without reading a waiting reply.
- **RQC**: Request Control (Bit 1)

  This bit is not supported as PG9000 cannot become the active controller in charge.
- **OPC**: Operation Complete (Bit 0)

  Indicates that PG9000 has completed all requested functions.

© 1998-2010 Fluke Calibration

원문: Fluke Calibration PG9602/9607 메뉴얼(영문) · 제조사 원문 자료입니다. 사양은 제조사 사정에 따라 변경될 수 있습니다.

we measure, we calibrate, we validate.
㈜테솔 · www.tessol.com TS-TL-FLK-082 163 / 192
KOLAS 국제공인교정기관 · ISO/IEC 17025

TS-TL-FLK-082

Notes

원문: Fluke Calibration PG9602/9607 메뉴얼(영문) · 제조사 원문 자료입니다. 사양은 제조사 사정에 따라 변경될 수 있습니다.

5. Maintenance, Adjustments And Calibration

5.1 Introduction

PG9000 was designed for very low maintenance operation. No maintenance is required other than:

- Adjustment of piston position measurement system (see Section 5.2.2)
- Cleaning piston-cylinders (see Sections 5.3.2 and 5.3.3)
- Lubricating piston-cylinder modules (see Section 5.3.1.2)
- Cleaning masses (see Section 5.4.1)
- Adjustment/calibration of on-board ambient conditions sensors (see Sections 5.2.1.2 - 5.2.1.4)
- Calibration of piston-cylinder temperature platinum resistance thermometer(s) (PRT) (see Section 5.2.1.5)
- Calibration of reference vacuum sensor (see Section 5.2.1.6)
- Calibration of piston-cylinder modules and mass set (see Sections 5.3.4, 5.4.2)
- Drive belt replacement (see Section 5.2.3)

This section provides information on maintenance, adjustment and calibration procedures and certain repair procedures.

Note

Calibration, maintenance and repair services for PG9000 are offered by authorized Fluke Calibration Authorized Service Providers (see Table 28).

⚠ Caution

- **PG9000 is a sophisticated measuring instrument with advanced on-board features and functions. Before assuming that unexpected behavior is caused by a system defect or breakdown, use this manual and other training facilities to become thoroughly familiar with PG9000 operation. For rapid assistance in specific situations, see Section 6, Troubleshooting.**
- **PG9000 is covered by a limited 1 year warranty (see Section 7.4). Unauthorized service or repair during the warranty period is undertaken at the owner's risk and may cause damage that is NOT covered under product warranty and/or may void the product warranty.**

⚠ Warning

- **Use only specified replacement fuses (see Section 1.2.1).**
- **PG9000 should only be repaired by an approved technician.**

© 1998-2010 Fluke Calibration

원문: Fluke Calibration PG9602/9607 메뉴얼(영문) · 제조사 원문 자료입니다. 사양은 제조사 사정에 따라 변경될 수 있습니다.

5.2 Platform

The PG9000 Platform consists of the PG9000 Base, The PG Terminal and the PG9000 Remote Electronics Module (REM). Local user interface is through the keypad and display on the terminal. Remote communications and all on board (built in) sensors are located inside or are connected to the Remote Electronics Module.

5.2.1 Calibration/Adjustment Of On-board Measurement Functions

5.2.1.1 Principles

The PG9000 Platform includes sensors and systems to measure ambient and instrument conditions. These sensors and systems may need calibration or adjustment. The calibration and/or adjustments are performed using functions accessed by pressing **[SPECIAL]** and selecting **<7cal>**.

The on-board measurement functions that can be adjusted or calibrated include:

- Barometric pressure sensor – internal to REM
- Relative humidity sensor – TH Probe external to REM (Hart 2626-S)
- Ambient temperature sensor – TH Probe external to REM (Hart 2626-S)
- Piston-cylinder module temperature sensor(s) – Internal to Base
- Piston position measurement system – Internal to Base
- Reference vacuum gauge (optional) – External to bell jar

The measurement uncertainty specification of the on-board sensor should be taken into consideration when selecting a reference relative to which to adjust them (see Section 1.2.1.3). The ambient pressure, temperature and relative humidity sensors, in particular, do not require a high level reference.

The PG9000 CAL function supports a user defined adder and multiplier that are used to offset and, if necessary, adjust the slope of the sensors output. The adder and multiplier adjust the sensor output as follows:

Corrected Output = (Measured Output X Multiplier) + Adder

Where:

- Corrected output, measured output and adder are in the current unit of measure of the sensor
- Multiplier is dimensionless

[SPECIAL], **<7cal>** provides capabilities to view internal sensor outputs and edit their Adders and Multipliers. The CAL view function provides an additional digit of resolution relative to other displays of internal sensor outputs. To calibrate or adjust the on-board sensors, compare their outputs to a reference and adjust the corresponding Adder and/or Multiplier as needed to arrive at acceptable agreement.

5.2.1.2 Barometric Pressure Sensor

❍ **PURPOSE**

To view and adjust the output of the on-board barometric sensor.

원문: Fluke Calibration PG9602/9607 메뉴얼(영문) · 제조사 원문 자료입니다. 사양은 제조사 사정에 따라 변경될 수 있습니다.

TS-TL-FLK-082

we measure, we calibrate, we validate. ㈜테솔 · www.tessol.com TS-TL-FLK-082 166 / 192

KOLAS 국제공인교정기관 · ISO/IEC 17025

OPERATION

To view the output of the barometric pressure sensor, press **[SPECIAL]** and select **<1atmp>**, **<1view>**. The display is:

1. Current reading of the barometric sensor in current pressure unit of measure.
2. Indication that this is a barometric pressure sensor display.
3. Current value of the Pressure Multiplier applied to the barometric pressure sensor reading.
4. Current value of the Pressure Adder (always in Pascal [Pa]) applied to the barometric pressure sensor reading.

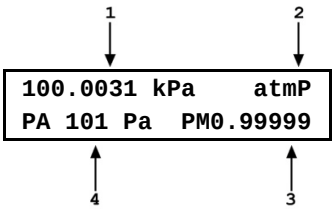

To adjust the values of PA and/or PM press **[SPECIAL]** and select **<1atmP>**, **<2cal>** to access a screen in which the values of PA and PM can be edited. From here, press **[ESCAPE]** and select **<1atmP>**, **<1view>** to view the barometric sensor reading with the edited calibration coefficients applied.

Note

See Section 5.2.1.1 for an explanation of Adders and Multipliers and their use in adjusting internal sensors.

5.2.1.3 Ambient Temperature sensor

PURPOSE

To view and adjust the output of the on-board ambient temperature sensor.

Note

The ambient temperature sensor is housed in the temperature - humidity (TH) Probe along with the humidity sensor. Each sensor maintains its own calibration. See Section 5.2.1.4.

OPERATION

To view the output of the ambient temperature sensor, press **[SPECIAL]** and select **<2ambT>**, **<1view>**. The display is:

1. Current reading of the ambient temperature sensor.
2. Indication that this is an ambient temperature display.
3. Current value of the Temperature Multiplier applied to the ambient temperature sensor reading.
4. Current value of the Temperature Adder (always in °C) applied to the ambient temperature sensor reading.

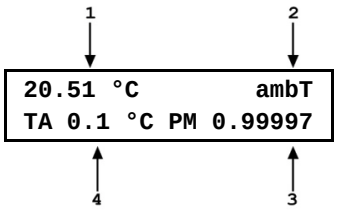

To adjust the values of TA and/or TM press **[SPECIAL]** and select **<2ambT>**, **<2cal>** to access a screen in which the values of TA and TM can be edited. From here, press **[ESCAPE]** and select **<2ambT>**, **<1view>** to view the ambient temperature sensor reading with the edited calibration coefficients applied.

Note

See Section 5.2.1.1 for an explanation of Adders and Multipliers and their use in adjusting internal sensors.

© 1998-2010 Fluke Calibration

원문: Fluke Calibration PG9602/9607 메뉴얼(영문) · 제조사 원문 자료입니다. 사양은 제조사 사정에 따라 변경될 수 있습니다.

TESSOL Technical Library

TS-TL-FLK-082

we measure, we calibrate, we validate.
㈜테솔 · www.tessol.com TS-TL-FLK-082 167 / 192
KOLAS 국제공인교정기관 · ISO/IEC 17025

5.2.1.4 Relative Humidity Sensor

❍ **PURPOSE**

To view and adjust the output of the on-board relative humidity sensor.

Note

The relative humidity sensor is housed in the temperature - humidity (TH) Probe along with the ambient temperature sensor. Each sensor maintains its own calibration. See Section 5.2.1.3.

❍ **OPERATION**

To view the output of the relative humidity sensor, press **[SPECIAL]** and select **<3%RH>**, **<1view>**. The display is:

1. Current reading of the relative humidity sensor.
2. Indication that this is a relative humidity display.
3. Current value of the Humidity Multiplier applied to the relative humidity sensor reading.

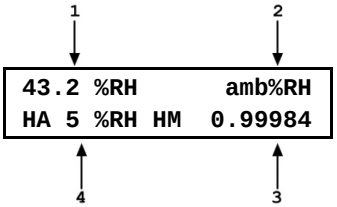

4. Current value of the Humidity Adder (always in %RH) applied to the relative humidity sensor reading.

To adjust the values of HA and/or HM press **[SPECIAL]** and select **<3%RH>**, **<2cal>** to access a screen in which the values of HA and HM can be edited. From here, press **[ESCAPE]** and select **<3%RH>**, **<1view>** to view the relative humidity sensor reading with the edited calibration coefficients applied.

Note

See Section 5.2.1.1 for an explanation of Adders and Multipliers and their use in adjusting internal sensors.

5.2.1.5 Piston-Cylinder Module Temperature Sensors

❍ **PURPOSE**

To view and adjust the output of the on-board piston-cylinder module temperature sensors.

❍ **PRINCIPLE**

In PG9607, the piston-cylinder module temperature is measured by two platinum resistance thermometers (PRTs) built into the PG9000 mounting post. The two PRT values are averaged to determine the piston-cylinder module temperature. The resistances of the PRTs are read by PG9000's internal ohmic measurement system and temperature is calculated as follows:

Temperature = (Measured resistance - resistance at 0 °C)/slope

The PRTs are 10052 4-pole type following DIN Norm 43760. The current supplied to the PRTs is 1 mA and the slope of resistance relative to temperature over the valid temperature range of 0 to 40 °C is 0.3896 Ω/°C. The uncertainty specification is ± 0.1 °C (± 0.04 Ω) with a resolution of 0.01 °C.

The ohmic measurement system in PG9000 is self-calibrated using on-board 100 and 107 Ω reference resistors.

The normal calibration procedure of the PRTs is to remove them from the PG9000 mounting post and determine the offsets (actual resistances at 0 °C) by calibration. To remove the PRTs from the PG9000 mounting post, follow the instructions provided in Section 5.2.1.5, Mounting Post PRT Removal.

원문: Fluke Calibration PG9602/9607 메뉴얼(영문) · 제조사 원문 자료입니다. 사양은 제조사 사정에 따라 변경될 수 있습니다.

TS-TL-FLK-082

we measure, we calibrate, we validate.
㈜테솔 · www.tessol.com TS-TL-FLK-082 168 / 192
KOLAS 국제공인교정기관 · ISO/IEC 17025

The values of resistances at 0 °C and the slopes, if desired, can be edited to reflect the new calibration by pressing **[SPECIAL], [7cal]** and selecting **<4PCT1>** for the first PRT, or **<5PCT2>** for the second PRT.

❍ **OPERATION**

To view the output of the piston-cylinder module temperature sensors, press **[SPECIAL], <7cal>, <4PCT1>**, **<1view>** or **[SPECIAL], <7cal>, <4PCT2>**, **<1view>.** The display is:

1. Current reading of the selected piston-cylinder module temperature sensor in degrees Centigrade.
2. Indication that this is a piston-cylinder module temperature display.
3. Current value of the resistance slope relative to temperature.
4. Current value of the offset at 0 °C in ohm.

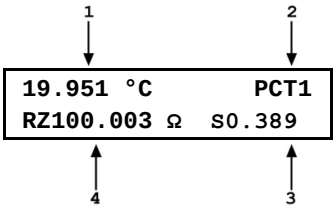

To adjust the values of **RZ** and/or **S**, press **[SPECIAL] , <7cal>** and select either **<4PCT1>**, **<2cal>** or **<4PCT2>**, **<2cal>** to access a screen in which the values of **RZ** and **S** can be edited. From here, press **[ESCAPE]** and select **<1view>** to view the individual piston-cylinder module temperature sensor reading with the edited calibration coefficients applied.

Mounting Post PRT Removal

To remove the mounting post PRTs:

❶ Remove the piston-cylinder module from the mounting post and replace with the ORANGE storage plug.

❷ Disconnect the PG9000 Platform from the PG9000 Terminal.

❸ Invert the PG9000 Platform so that the bottom of the platform is up. Support the platform so that it does not tip over. A simple solution is to place the platform upside down on a sturdy box which is smaller than the outside platform dimensions and is also tall enough to allow the mounting post to be suspended.

❹ Remove the two socket head screws (2.5 mm Allen tool), securing the small circular AMH DRIVE connector bulkhead plate to the platform rear panel.

❺ Loosen - **but do not remove** - the four socket head screws (3 mm) located on the PRT/cable pass through plate. The plate is located on the underside of the platform. Make sure to note the location of PRT1 and PRT2: PRT1 has longer leads than PRT2. PRT1 installs in the mounting post hole that is furthest from the circular connector location on the rear panel. Maintaining orientation of PRT1 and PRT2 assures consistency of piston-cylinder temperature measurement.

The PRTs are able to be removed by gently grasping the shafts (not the wires) and sliding out in a straight motion.

❻ Slide the PRTs out of the mounting post.

Note

Once the PRTs are removed from the Base it is recommended that they be reconnected to the REM for temperature readout. The REM includes 100 and 107 ohm reference resistors . Reading resistance on the PRTs in combination with the REM includes any errors contributed by the reference resistors and the ohmic measurement circuit.

© 1998-2010 Fluke Calibration

원문: Fluke Calibration PG9602/9607 메뉴얼(영문) · 제조사 원문 자료입니다. 사양은 제조사 사정에 따라 변경될 수 있습니다.

TS-TL-FLK-082

we measure, we calibrate, we validate.
㈜테솔 · www.tessol.com TS-TL-FLK-082 169 / 192
KOLAS 국제공인교정기관 · ISO/IEC 17025

❼ After reinstalling the PRTs in their correct position (see step 5) and tightening the four socket head screws, reassemble in the reverse order. Thermal grease may be applied lightly to the PRTs, if available.

❽ Reconnect the PG9000 terminal to the PG9000 Platform using the cable supplied.

❾ Power up PG9000 and verify proper operation of all on-board sensors.

5.2.1.6 Reference Vacuum Sensor (Optional)

❍ **PURPOSE**

To view and adjust the output of the (COM2) reference vacuum gauge.

❍ **OPERATION**

To view the output of the reference vacuum gauge, press **[SPECIAL]** and select **<7cal>, <6vac>**, **<1view>**. The display is:

1. Current reading of the vacuum gauge in Pascal. Reads **< > 13 >** whenever the current reading is greater than 13 Pa.
2. Indication that this is a vacuum display.
3. Current value of the Vacuum Multiplier applied to the vacuum gauge reading.
4. Current value of the Vacuum Adder (always in Pa) applied to the vacuum gauge reading.

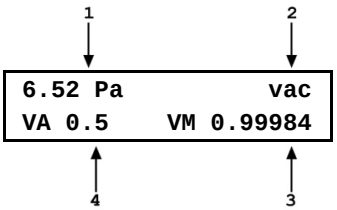

To adjust the values of VA and/or VM press **[SPECIAL]** and select **<6vac>**, **<2cal>** to access a screen in which the values of VA and VM can be edited. From here, press **[ESCAPE]** and select **<6vac>**, **<1view>** to view the vacuum gauge reading with the edited calibration coefficients applied.

Note

See Section 5.2.1.1 for an explanation of Adders and Multipliers and their use in adjusting internal sensors.

5.2.2 Piston Position Detection Adjustment

❍ **PURPOSE**

To adjust the piston position measurement system.

❍ **PRINCIPLE**

The PG9000 piston position measurement operates on the LVDT principle. There are coils mounted on either side of the piston-cylinder module mounting post and a ring on the inside of the mass loading bell acts as the sensor element. As the bell moves, the LVDT signal changes proportionally to bell position, and therefore piston position. The signal is translated into relative position in the ± 4.5 mm stroke of the piston (see Section 3.5). The piston position and fall rate can be viewed in the first **[SYSTEM]** run screen (see Section 3.11.5.1).

The piston position indication system can be realigned by an automated on-board routine. This routine sets and records the LVDT output at the piston HI and LO stop positions.

Note

When an AMH mass set is used, it is important to follow a specific procedure to adjust the piston position detection system. See <u>Special Considerations When Using an AMH Mass Set</u> in the ❍ OPERATION Section below.

원문: Fluke Calibration PG9602/9607 메뉴얼(영문) · 제조사 원문 자료입니다. 사양은 제조사 사정에 따라 변경될 수 있습니다.

❍ **OPERATION**

Note

- **Refer to piston stroke schematic Figure 9.**
- **If the PG9000 Platform is equipped with an AMH mass set, see Special Considerations When Using an AMH Mass Set.**

To automatically adjust the PG9000 piston position indication system, load the mass bell only on the piston. Then press **[SPECIAL]**, **<7cal>**, **<5Pposition>**, **<2cal>.**

The prompt **<Hold piston at max down stop>** appears. Place the piston in the fully down position (be sure to compress the springs so that the piston is truly at the low stop position by venting the PG9000 TEST connection and loading at least 5 kg of mass and/or pressing down firmly on the piston. Press **[ENTER]**.

The prompt **<Hold piston at max up stop>** appears. Increasing pressure on the PG9000 TEST connection, raise the piston in the fully up position (be sure to compress the springs so that the piston is truly at the high stop position by applying pressure underneath the piston that is the equivalent to at least 5 kg greater than the pressure required to float the piston with the current load). Press **[ENTER]**.

Pressing **[SPECIAL]** and select **<7cal>**, **<5Pposition>**, **<1view>** allows current piston position and fall rate (see Section 3.11.5.1) to be viewed on the bottom line of the display. Position is on the left and fall rate is on the right.

Special Considerations When Using an AMH Mass Set

The tubular binary masses of an AMH mass set have some influence on the piston position detection system so it is important to adjust the piston position detection system with all the binary masses loaded.

To adjust the PG9000 piston position system when an AMH mass set is being used, proceed as follows:

❶ Vent pressure.

❷ Select **[SPECIAL]**, **<8AMH>**, .**<2control>**, **<2discreet>** and load all of the binary masses and none of the main masses (see Section 3.13.8.2).

❸ Press **[SPECIAL]**, **<7cal>**, **<5Pposition>**, **<2cal>**.

❹ The prompt **<Hold piston at max down stop>** appears. Check that the pressure under the piston is really vented and press **[ENTER]**.

❺ The prompt **<Hold piston at max up stop>** appears. Without changing the mass load, generate a pressure under the piston great enough to insure that the piston will go completely to the top stop. This requires a pressure equivalent to a mass load of 18 kg. For example, if the piston is a 5 kPa/kg, generate at least 90 kPa. Press **[ENTER].**

❻ Process is complete. Use **[SPECIAL]**, select **<7cal>**, **<5Pposition>**, **<1view>** to verify that piston position is **<+4.5 mm>** when fully up and **<-4.5 mm>** when fully down.

5.2.3 Drive Belt Replacement

Periodic replacement of the drive system belts may be necessary to retain maximum performance of the rotational engagement system. Due to specific material properties of the drive belts, it is important that only genuine **DH Intruments** replacement parts be used.

Note

A set of spare drive belts is included in the accessories delivered with the PG9000 Platform.

© 1998-2010 Fluke Calibration

원문: Fluke Calibration PG9602/9607 메뉴얼(영문) · 제조사 원문 자료입니다. 사양은 제조사 사정에 따라 변경될 수 있습니다.

TS-TL-FLK-082

we measure, we calibrate, we validate. ㈜테솔 · www.tessol.com TS-TL-FLK-082 171 / 192

KOLAS 국제공인교정기관 · ISO/IEC 17025

To remove the drive belts:

❶ Using a 3 mm Allen tool, remove the three screws on the **outer** diameter of the pulley plate. **Do not remove the screws on the inner diameter.** The pulley plate is located directly around the mounting post.

❷ Remove the two drive belts and replace them with the new ones. Take care to clean the new belts with soap and water to remove any remaining mold release to ensure good contact with the mass bell. It is suggested to wear gloves when handling the drive belts to avoid transferring oils to the drive belt surfaces.

❸ Realign the notched pulley with the pins on the drive motor.

❹ Replace the pulley plate and three screws.

❺ Engage the drive system to ensure proper operation.

5.3 Piston-Cylinder Disassembly, Cleaning and Maintenance

❍ **PURPOSE**

To disassemble and reassemble piston-cylinder modules and clean the piston-cylinder elements when necessary.

❍ **PRINCIPLE**

PG9000 piston-cylinders are high precision metrological assemblies. The annular gap between the piston and the cylinder is adjusted to be less than 1 micron, and in some cases, less than 0.5 micron. In normal operation, this space is lubricated by the pressurized medium If the space becomes contaminated, usually due to foreign matter carried by the pressurized medium, PG9000 performance can be affected. Symptoms of contamination of the space (a **dirty** piston-cylinder) include:

- **Difficulty rotating piston:** The motorized rotation system is unable to start piston rotation.
- **Decay in rotation rate is more rapid than normal:** Piston rotation slows down too quickly, especially at low mass loads.
- **Poor sensitivity:** Very small mass changes do not have usual effect.
- **Noisy pressure:** The pressure defined when the piston is floating is not a stable as it usually is.

If any of these symptoms are present, they **may** be caused by a **dirty** piston-cylinder. The piston-cylinder module should be disassembled and the piston-cylinder cleaned.

Note

Gas lubricated piston-cylinders are highly sensitive to contamination. When using gas lubricated piston-cylinders, if symptoms of contamination develop rapidly with operation after cleaning, there is almost certainly a source of contamination within the PG9000 system. This source must be identified and eliminated to reduce piston-cylinder cleaning frequency. Very often, the source of contamination is the test gas supply itself (which contains humidity or lubricating oil) or it is the return from unclean gas operated DUTs that are connected to the PG9000 system.

원문: Fluke Calibration PG9602/9607 메뉴얼(영문) · 제조사 원문 자료입니다. 사양은 제조사 사정에 따라 변경될 수 있습니다.

5.3.1 Disassembly of the PG9607 Piston Retaining Assembly

⚠ Caution

- **Cleaning the piston-cylinder requires disassembly of the piston-cylinder assembly and exposure of the piston-cylinder to possible damage. These risks include damage to the critical working surfaces for all piston-cylinder sizes and chipping or breaking. Only qualified personnel should undertake piston-cylinder disassembly and reassembly and the instructions and recommendations contained in this manual should be followed carefully throughout the operation.**
- **NEVER touch the lapped surfaces (polished appearance) of the piston or cylinder with your bare hands. Body oils and acids can permanently etch the surfaces.**

The piston retaining assembly (see Figure 17) does not need to be disassembled as part of routine maintenance. However, the piston retaining assembly captivates the cylinder stroke limiter that is part of the of cylinder assembly whose mass must be determined when recalibrating the cylinder. For routine installing and removing of PG9607 piston-cylinder see Section 2.3.2.

5.3.1.1 Disassembly Procedure

To remove the cylinder stroke limiter from the piston retaining assembly follow the procedure below. To reassemble, follow the reassembly procedure in Section 5.3.1.2. Numerical references in this procedure refer to Figure 17.

❶ (See Section 2.3.2, Figure 6 for this step.) With the piston NOT installed, install the piston retaining assembly (5) onto the mounting post (7).

❷ Using circlip pliers, remove the spring retaining circlip (1) from the top of the assembly. As the circlip is removed, the spring washer (2) will lift slightly as the springs (3, 5) decompress.

❸ Lift off spring washer (2).

❹ Gently lift out the spring carrier (4) along with the four high stop springs (3) it carries. This leaves behind, in the piston retaining nut (7), the cylinder stroke limiter (6) and the four low stop springs (5). Take care that the springs do not drop down into the measured pressure opening in the center of the mounting post.

❺ Using tweezers, carefully remove the four low stop springs (5). Then lift out the cylinder stroke limiter (6).

⚠ Caution

The cylinder stroke limiter (6) floats with the cylinder and is thus part of the cylinder assembly mass. Take care not to contaminate this part when handling it. It is preferable to avoid contacting this part with bare hands.

© 1998-2010 Fluke Calibration

원문: Fluke Calibration PG9602/9607 메뉴얼(영문) · 제조사 원문 자료입니다. 사양은 제조사 사정에 따라 변경될 수 있습니다.

we measure, we calibrate, we validate.
㈜테솔 · www.tessol.com TS-TL-FLK-082 173 / 192
KOLAS 국제공인교정기관 · ISO/IEC 17025

TS-TL-FLK-082

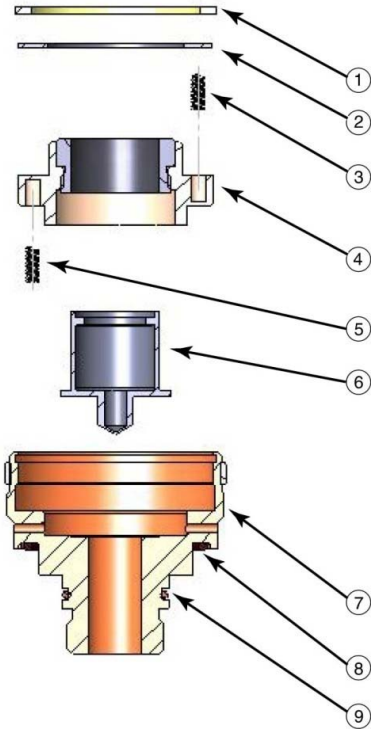

① Spring Retaining Circlip
② Spring Washer
③ (4) High Stop Springs
④ Spring Carrier
⑤ (4) Low Stop Springs
⑥ Cylinder Stroke Limiter
⑦ Piston Retaining Nut
⑧ Upper Piston Sealing O-ring (Brown, Viton, 2-026)
⑨ Mounting Post O-ring (Brown, Viton, 2-019)

Figure 17. Piston Retainer Assembly

5.3.1.2 Reassembly Procedure

To reassemble the cylinder stroke limiter into the piston retaining assembly, follow the procedure below. Numerical references in this procedure refer to Figure 17.

❶ Remove the piston retaining nut (7) from the mounting post and set aside.

❷ Flip over the spring carrier (4) and place the four low stop springs (5) into the four holes on the bottom of the spring carrier (4) (the bottom of the spring carrier is the side WITHOUT the white plastic ring).

❸ Place the cylinder stroke limiter (6) into the center section of the spring carrier (4). Be sure to orient the cylinder stroke limiter correctly: pointed end facing out in the direction of the springs.

⚠ Caution

The cylinder stroke limiter floats with the cylinder and is thus part of the cylinder assembly mass. Take care not to contaminate this part when handling it. Avoid contacting this part with bare hands.

❹ Carefully slip the piston retaining nut (7) over the spring carrier (4), low stop springs (5) and piston stroke limiter (6). Take care so that the springs do not come out of the holes and so the piston retaining nut (7) does not cock on the spring carrier (4).

❺ Verify that no springs have fallen out of place by pressing the spring carrier (4) into the piston retaining nut (7) and compressing the springs. There should be about 3 to 4 mm of movement. If there is less, one or several of the springs is probably sideways in the space and the process should be repeated from Step ❷ above.

❻ Place the four high stop springs (3) into the holes on the spring carrier (4).

원문: Fluke Calibration PG9602/9607 메뉴얼(영문) · 제조사 원문 자료입니다. 사양은 제조사 사정에 따라 변경될 수 있습니다.

❼ Place the spring washer (2) on top of the high stop springs (3).

❽ Install the spring retaining circlip (1). The spring washer (2) needs to be pressed down compressing the springs slightly to allow the circlip (1) to engage in its seat in the retaining nut (7).

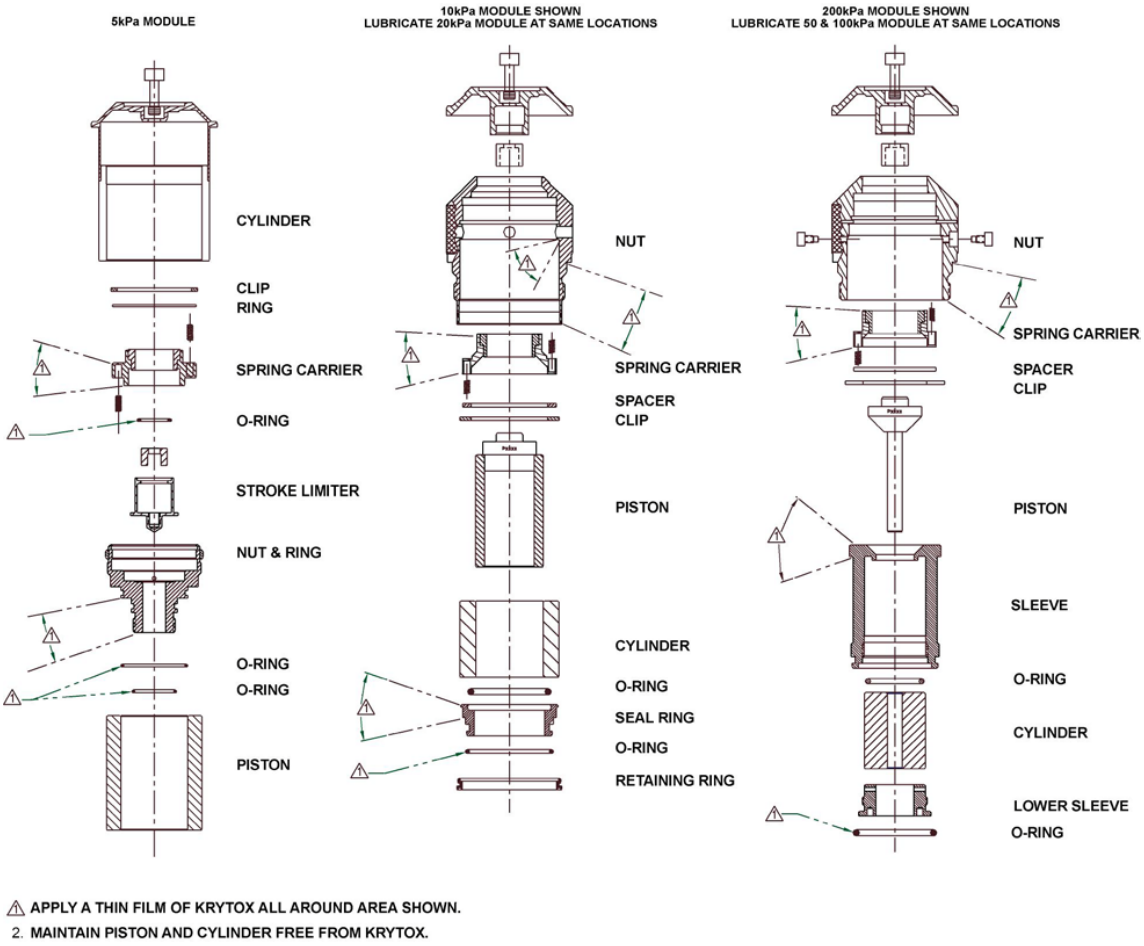

Figure 18. Gas Operated, Gas Lubricated Piston-Cylinder Module Lubrication Chart

5.3.2 Cleaning (Other Than PG9607)

Water/detergent method

Note

Of the two cleaning methods, the water/detergent method is more time consuming but it is also more thorough.

⚠ Caution

DO NOT undertake piston-cylinder module disassembly without familiarizing yourself with Section 5.3 of this manual. Incorrect disassembly may damage or destroy the piston-cylinder element.

❶ Disassemble the piston-cylinder module following the instructions given in Section 5.3.

❷ Reinsert the piston (with cap installed) into the cylinder.

© 1998-2010 Fluke Calibration

원문: Fluke Calibration PG9602/9607 메뉴얼(영문) · 제조사 원문 자료입니다. 사양은 제조사 사정에 따라 변경될 수 있습니다.

we measure, we calibrate, we validate.
KOLAS 국제공인교정기관 · ISO/IEC 17025
㈜테솔 · www.tessol.com TS-TL-FLK-082 175 / 192
TESSOL Technical Library
TS-TL-FLK-082

❸ Create a bath of water and mild liquid dishwashing detergent. Distilled water is acceptable. De-ionized water is best. Detergent must be free of additives (i.e., lotions or softening agents which may leave a residue after cleaning). To avoid undesired thermal effects, bring the bath to room temperature.

❹ Holding the piston-cylinder assembly by the outside of the cylinder and the piston cap, submerge the assembly in the bath. Using a rotating motion, thoroughly work the detergent into the piston-cylinder assembly.

❺ With the piston-cylinder still assembled, thoroughly rinse the assembly in a bath of water only. Use the same rotating motion as in the previous step.

❻ Remove the piston from the cylinder and thoroughly dry all areas of the assembly using a lint free towel. DO NOT touch the critical lapped surfaces of the piston or the cylinder with anything other than the drying towel. Only use one side of the towel during this process as the other side will become contaminated by contact with the operator's hands. Dry thoroughly.

❼ Reassemble the metrological assembly in reverse order.

❽ If the assembly temperature was elevated during cleaning, it may be necessary to wait to allow the temperature of the assembly to return to ambient temperature before the assembly will operate normally.

Quick method

Note

Of the two cleaning methods, the quick method is less demanding but it is less thorough.

⚠ Caution

DO NOT undertake piston-cylinder module disassembly without familiarizing yourself with Section 5.3 of this manual. Incorrect disassembly may damage or destroy the piston-cylinder.

❶ Disassemble the piston-cylinder module following the instructions given in Section 5.3.1.1.

❷ If you have not already done so, reinstall the cap on the piston.

❸ Apply a small amount of Dow Corning® OS-20 or glass cleaner to a lint free wipe. If glass cleaner is used, slightly dilute the cleaner using distilled or de-ionized water to help ensure that no residue will be left behind. Wipe the lapped surfaces (polished appearance) of both the piston and cylinder.

❹ Using a separate, clean, lint free wipe, wipe the surfaces again to remove any remaining moisture. If canned air is available, blow the surfaces off with a **slow** flow of air.

❺ Reassemble the piston-cylinder assembly in reverse order.

5.3.3 Cleaning (PG9607)

To clean the PG9607 piston-cylinder the cleaning methods described in Section 5.3.2 should be used with the following exceptions/comments:

Water/detergent method: Due to the piston-cylinder's large diameter and very small annular gap, it is very difficult to insert the piston into the cylinder when the piston is not installed on the PG9607 mounting post. Without the alignment mechanism provided by the mounting post arrangement (see Figure 6) there is a substantial risk of cocking the cylinder on the piston. When using the water/detergent method to clean a PG9607 piston-cylinder, wash the cylinder and the piston separately and do not attempt to put the piston into the cylinder until the piston is installed on the PG9607 platform mounting post.

Quick method: As it is difficult to hold the piston without making contact with its critical working surface, install the piston onto the PG9607 platform mounting post to clean it (see Section 2.3.2).

원문: Fluke Calibration PG9602/9607 메뉴얼(영문) · 제조사 원문 자료입니다. 사양은 제조사 사정에 따라 변경될 수 있습니다.

5.3.4 Recalibration

PRINCIPLE

Piston-cylinders and mass sets are recalibrated by redetermining the effective area of the piston-cylinder and the true mass values of the masses. It is recommended that piston-cylinders and mass sets be recalibrated or verified at the end of their first and second years of operation. Then, based on their observed stability, a longer calibration interval can usually be assigned. Though other organizations may be able to perform these calibrations, it is recommended that a **Fluke Calibration** Service be used, if possible.

The recalibration process may find values for piston-cylinder effective area, pressure coefficient and mass values that are different from the previous values. The PG9000 piston-cylinder and/or mass set files must be changed to reflect the new values (see Sections 5.3.4.1 and 5.3.4.2).

5.3.4.1 Updating Piston-Cylinder Module Files

See Section 3.13.1.2 for information on editing a piston-cylinder module file to reflect new calibration data.

5.3.4.2 Updating Mass Set Files

See Sections 3.13.1.7 and 3.13.1.12 for information on editing mass set and mass loading bell files to reflect new calibration data. The mass of the piston assembly is included in the piston-cylinder module file (see Section 3.13.1.2).

5.4 Mass Sets

5.4.1 Cleaning

Care should always be taken with all PG9000 masses, including the piston assembly and the mass loading bell, to avoid contaminating them with liquids or particles. They should never be handled with bare hands.

Over time, or by an accidental incident, masses may become soiled. In these cases, they can be cleaned.

Masses should be cleaned with a non-abrasive general purpose cleaner (such as glass cleaner) and wiped dry with lint free paper towels.

Note

Cleaning masses can change mass values. If knowledge of as received condition of the masses is required then masses should be cleaned after as received mass determination is taken and before as left mass determination.

5.4.2 Recalibration

See Section 5.3.4.

5.5 Reloading Embedded Software Into PG9000 Flash Memory

PG9000 uses FLASH memory. This allows the embedded software that controls PG9000 operations and functions to be loaded into PG9000 over its COM1 port from a computer with a simple FLASH loading utility program.

To replace corrupted software or upgrade your software, access the **Fluke Calibration** worldwide web site at **www.dhinstruments.com** and go to **embedded** located under **software**. A Flash loading utility and the latest PPC4 software are available for download at no charge. If you do not have access to the

© 1998-2010 Fluke Calibration

원문: Fluke Calibration PG9602/9607 메뉴얼(영문) · 제조사 원문 자료입니다. 사양은 제조사 사정에 따라 변경될 수 있습니다.

TS-TL-FLK-082

we measure, we calibrate, we validate.
㈜테솔 · www.tessol.com TS-TL-FLK-082 177 / 192
KOLAS 국제공인교정기관 · ISO/IEC 17025

web or have difficulty downloading or loading software, contact your **Fluke Calibration** representative or a **Fluke Calibration** Authorized Service Provider for assistance.

If you believe you have discovered an error or "bug" in PG9000 software, please report it with complete details by email to **cal.repair@dhinstruments.com** or submit an on-line **Quality Feedback Report** at **www.dhinstruments.com**.

Note

- **Do not power down the PG9000 while upgrading the software. Only upgrade software to a newer version. Never load an earlier version unless explicitly instructed to do so. After the upgrade, a message on the PG9000 terminal may indicate "PL REPROGRAMMING! TAKES 30 SEC". Do not power down while this message is displayed. A message will follow instructing when programming is complete to cycle the PG9000 power.**
- **The DH Intruments flash software loading utility and PG9000 embedded software are available for download from the SOFTWARE section of FLUKE CALIBRATION's worldwide web site at www.dhinstruments.com.**

5.6 Disassembly And Reassembly Of PG9000

5.6.1 Platform

See Section 5.2.1.5, Piston-Cylinder Module Temperature Sensors.

5.6.2 Terminal

To open the PG9000 Terminal proceed as follows:

❶ Disconnect power.

❷ Remove the pop-off screw covers on the bottom of the case.

❸ Remove the four case screws.

❹ Lift OFF the cover. Be careful not to over stress the ribbon cables connecting the display and keypad in the cover to the printed circuit board in the base.

❺ Disconnect the cover to base ribbon cables at the connectors on the base printed circuit board. Be aware that the connectors are locking connectors.

❻ To reassemble, proceed in reverse order.

5.6.3 AMH Automated Mass Handler Removal

To remove the AMH-100-VAC from the PG9000 Platform, see Section 3.7.2.2.

원문: Fluke Calibration PG9602/9607 메뉴얼(영문) · 제조사 원문 자료입니다. 사양은 제조사 사정에 따라 변경될 수 있습니다.

TS-TL-FLK-082

we measure, we calibrate, we validate.
KOLAS 국제공인교정기관 · ISO/IEC 17025

6. Troubleshooting

6.1 Overview

PG9000 is a sophisticated pressure measuring instrument with advanced on-board features and functions. Before assuming that unexpected behavior is caused by a system defect or breakdown, the operator should use this manual and other training facilities to become thoroughly familiar with PG9000 operation. This troubleshooting guide is intended as an aid in identifying the cause of unexpected PG9000 behavior and determining whether the behavior is due to normal operation or an internal or external problem.

Identify the symptom or unexpected behavior you are observing from the **SYMPTOM** list below. A **PROBABLE CAUSE** is provided and a **SOLUTION** is proposed including references to manual sections that provide information that may be of assistance.

Table 25. PG9000 Troubleshooting Checklist

SYMPTOM	PROBABLE CAUSE	SOLUTION
Will NOT power up.	Blown fuse.	Replace fuse in PG9000 Terminal.
Front panel keys seem to be disabled.	“REMOTE” command has been sent from a host computer.	Send “LOCAL” command from host computer or cycle PG9000 power. 4.3.4.2
Front panel display is dim.	Screen saver option has been activated.	Press any key to resume full screen power, adjust activation time if desired. 3.13.4.1
Keypad presses make undesired sounds or no sounds.	Keypad sound settings are incorrect.	Use sounds function to set keypad sounds as desired. 3.13.4.2
Cannot access certain functions. Display shows: <ACCESS RESTRICTED>.	User Level setting restricts access to those functions.	Change User Level or consult system manager. 3.13.4.5
Cannot establish communication over interface.	Computer and/or PG9000 interface not correctly configured; incorrect or bad interface cable.	Check and correct interface configurations and cables if necessary. Run COM port test. 3.13.5, 3.13.5.3, 4.2
Displays <FATAL ERROR> or <FATAL FAULT>.	Encountered unresolved internal software conflict.	Cycle power to clear. Please record conditions leading up to the event, including the numbers displayed when enter is pressed and report the information to a Fluke Calibration Authorized Service Provider.
Display <TOUT>, <TIME-OUT> or <-TO->	PG9000 is having a communications problem with an external barometer or pressure generation/control component.	Check setup and communications with external barometer or pressure generation/control component. 3.13.5.4, 3.13.5.5
Displays <******> or <OVERFLOW> where a numerical value should be.	Number to be displayed is too large for allocated space. Usually due to an erroneous setting or measurement causing an out of limit high value to be calculated.	Check settings that may be causing an out of limit high measurement and adjust if necessary. 3.11.3
The PG Terminal constantly displays <Searching …. >.	The PG Terminal is unable to establish communications with the PG9000 Platform.	Check that the PG Terminal to Platform cable is installed correctly. If still unable to get beyond <Searching …. >, contact a Fluke Calibration Authorized Service Provider. 2.3.1.1
The run screen is not the normal MAIN run screen.	You are in the SYSTEM or AMBIENT run screen.	Operation is normal. Press [ESCAPE] 3.9

© 1998-2010 Fluke Calibration

원문: Fluke Calibration PG9602/9607 메뉴얼(영문) · 제조사 원문 자료입니다. 사양은 제조사 사정에 따라 변경될 수 있습니다.

SYMPTOM	PROBABLE CAUSE	SOLUTION
Displays of ambient conditions values are not accurate.	The reference to which the ambient condition values are being compared is not accurate or the specifications of the ambient conditions sensors are not being evaluated correctly.	Check the specifications and operation of the reference being used for ambient conditions. Consider the specifications of the ambient conditions measurements. 1.2.1.3
On power up, PG Terminal displays <RH Sensor ERR#xx> or PRT or RH field displays flashing <ERR>	TH Probe is not connected	Turn power off. Check TH Probe connection. Turn power on. 2.3.1.1
Piston drop rate is excessive.	There is a leak in the pressurized system or the device under test itself.	Correct leak.
Piston rotation rate decay rate is excessive.	Piston position detection is out of adjustment is piston is in spring zone, not floating freely.	Adjust piston position detection. 5.2.2
Motorized rotation will not engage.	Motorized rotation system recovering from overload or measurement made is absolute by vacuum and reference vacuum is not under ready limit.	Wait 25 seconds for system to recover. 3.11.13, 3.11.8
Automated motorized rotation is not operating.	Automated motorized rotation is OFF.	Press [ROTATE]. 3.11.8
Manually activated motorized rotation cutoff while the [↻] was still pressed.	Motorized rotation has overloaded or maximum rotation rate was reached.	Operation is normal. Wait 25 seconds for system to recover from overload or wait until rotation rate is below maximum. 3.11.8
Automated motorized rotation is not engaging even though rotation rate is less than minimum *Ready* rotation rate.	Current mass load is under cutoff load of 3 kg.	Operation is normal. 3.4.2
Motorized rotation unable to start piston rotation.	Piston-cylinder dirty.	Clean piston-cylinder. 5.3.1
The piston deceleration function starts immediately when **[ENTER/SET P]** is pressed.	Operation is normal but can be modified so that deceleration does not occur if it is not needed.	Turn off the PRE-DECEL function. 3.11.8.1
Piston rotation rate slows down too quickly; motorized rotation engages too frequently.	Piston-cylinder dirty, PG9000 Platform not level, PG9000 subjected to excessive vibration.	Clean piston-cylinder, level PG9000 Platform, adjust piston position indication, remove sources of vibration. 2.3.1.1, 5.3.2
	Piston position indication is not properly calibrated and piston is not floating when rotation engages.	Calibrate piston position indication system. 5.2.2
The mass value loading instruction resulting from a pressure entry and the mass value displayed in the MAIN run screen are not the same.	Mass entries are in nominal mass and MAIN run screen displays actual mass.	Operation is normal. Review PG9000 mass protocol. 3.6
The resolution of mass loading instructions doesn't seem correct.	The mass loading resolution setting is set incorrectly.	Use [RES] to set mass loading resolution as desired. 3.11.10
Piston position readings seem incorrect.	Piston position reading system needs to be adjusted; mass bell is not loaded so piston position indication is not operating.	Execute piston position reading adjustment procedure, load mass bell. 5.2.2
Pressure defined by PG9000 is grossly incorrect.	Active piston-cylinder module and/or mass set are not those that are in use, the correct mass value is not loaded.	Select correct piston-cylinder module and mass set; check mass load accounting. 3.6, 3.11.2, 3.13.1.10
Pressure defined by PG9000 is incorrect by roughly 100 kPa (14.5 psi).	PG9000 is in absolute measurement mode when it should be in gauge measurement mode or vice-versa.	Use [MODE] to select correct measurement mode. 3.11.4
Pressure defined by PG9000 is incorrect by relatively small amounts.	A pressure head is applied incorrectly or inadvertently, the value of gravity used by the SETUP file is incorrect, the PG9000 Platform is not level, information in the piston-cylinder module and/or mass set file is incorrect.	Check and correct if necessary. 3.11.7, 3.12, 3.13.1.8, 3.13.1.3

© 1998-2010 Fluke Calibration

원문: Fluke Calibration PG9602/9607 메뉴얼(영문) · 제조사 원문 자료입니다. 사양은 제조사 사정에 따라 변경될 수 있습니다.

SYMPTOM	PROBABLE CAUSE	SOLUTION
Pressure defined by PG9000 is incorrect.	Piston is in spring zone although piston position indicates it is floating freely.	Adjust piston position measurement system. 5.2.2
When using automated pressure control pressure generation stopped and the controller is beeping.	Pressure reached controller's UPPER LIMIT.	Check [GEN] UL and adjust if desired. 3.11.9.3
When using AMH automated mass handler, PG9000 still prompts for manual mass loads.	Mass loading resolution is set to finer than 0.1 kg and prompts are to load trim mass, AMH mass handler did not initialize.	Adjust mass loading resolution to 0.1 kg, initialize AMH mass set by selecting it. 3.11.10, 3.13.1.10
Automated pressure control (GEN) is overshooting the pressure at which the piston floats.	The pressure controller TOLERANCE function setting is too small.	Adjust the tolerance setting. 3.11.9.4
	Piston position detection system is not properly calibrated and piston is not floating as expected.	Calibrate piston position indication system. 5.2.2
Automated pressure control (GEN) is not increasing or decreasing pressure as expected.	Pressure or vacuum supply on the pressure controller is not adequate.	Provide correct pressure and vacuum supplies to pressure controller. See the pressure controller Operation and Maintenance Manual.
Automated pressure control (GEN) is not starting after setting a target and loading mass AND measurement mode is absolute by vacuum.	In absolute by vacuum measurement mode, before automated pressure generation begins, the reference vacuum must be below 13 Pa.	Wait for vacuum to reach less than 13 Pa, check and correct vacuum supply if inadequate. 3.11.4, 3.11.9

© 1998-2010 Fluke Calibration

원문: Fluke Calibration PG9602/9607 메뉴얼(영문) · 제조사 원문 자료입니다. 사양은 제조사 사정에 따라 변경될 수 있습니다.

Notes

원문: Fluke Calibration PG9602/9607 메뉴얼(영문) · 제조사 원문 자료입니다. 사양은 제조사 사정에 따라 변경될 수 있습니다.

7. Appendix

7.1 Conversion Of Numerical Values

PG9000 performs all internal calculations in SI units. Numerical values input or output in other units are converted to SI immediately after entry and back to other units just before output as needed.

Table 26 provides the conversion coefficients used by PG9000 to convert numerical values expressed in SI units to corresponding values expressed in other units.

7.1.1 Pressure

Table 26. Pressure Unit of Measure Conversions

To convert from Pa to		Multiply by
Pa	Pascal	1.0
mbar	millibar	1.0 E-02
kPa	kilo Pascal	1.0 E-03
bar	Bar	1.0 E-05
mmWa @ 4°C	millimeter of water	1.019716 E-01
mmHg @ 0°C	millimeter of mercury	7.50063 E-03
psi	pound per square inch	1.450377 E-04
psf	pound per square foot	1.007206 E-06
inWa @ 4°C	inch of water	4.014649 E-03
inWa @ 20°C	inch of water	4.021732 E-03
inWa @ 60°F	inch of water	4.018429 E-03
inHg @ 0°C	inch of mercury	2.953 E-04
kcm^2	kilogram force per centimeter square	1.019716 E-05
Torr	Torr (mmHg @ 0°C)	7.50063 E-03
mTor	milli Torr (micron Hg @ 0°C)	7.50063
user	User	User defined coefficient

7.2 Defined Pressure Calculations

Sections 7.2.1 and 7.2.2 document the calculations used by PG9000 piston gauges to obtain the defined pressure.

Table 27 defines the pressure calculation variables used in Sections 7.2.1 and 7.2.2.

© 1998-2010 Fluke Calibration

원문: Fluke Calibration PG9602/9607 메뉴얼(영문) · 제조사 원문 자료입니다. 사양은 제조사 사정에 따라 변경될 수 있습니다.

Table 27. PG9000 Defined Pressure Calculation Variables

VARIABLE	DEFINITION	UNITS	SOURCE OF VALUE
$\sqrt{A_{\theta,P}/\pi}$	Piston radius at temperature θ and pressure P	m	Calculated.
$A_{20,0}$	Piston effective area at 20°C, P_{atm}	mm^2	Piston-cylinder module file (3.13.1.3).
$A_{\theta,P}$	Piston effective area at temperature θ, pressure P	m^2	Calculated from $A_{20,0}$ in piston-cylinder module file (3.13.1.3).
G	Local gravity	m/s^2	Local, standard or user as specified in current SETUP file (3.12, 3.13.6).
K_N	Nominal mass to pressure conversion coefficient for a given piston-cylinder size	Pa/kg	Calculated from $A_{20,0}$ and standard conditions.
M	Mass load	kg	Current mass loading instruction (3.6, 3.11.11).
P_A	Absolute pressure	Paa	Calculated.
P_{atm}	Atmospheric (ambient) pressure	Paa	Internal measurement, user entered value or standard as specified by SETUP file (3.12).
P_G	Gauge pressure	Pa	Calculated.
P_{HA}	Fluid head correction in absolute mode	Pa	Calculated using device heights and medium (7.2.2, 3.11.7, 3.13.3).
P_{HG}	Fluid head correction in gauge mode	Pa	Calculated using device heights and medium (7.2.2, 3.11.7, 3.13.3).
P_{nom}	Nominal pressure	Pa	In pressure to mass mode $P_{nom}=P_{req}$ In mass to pressure mode $P_{nom}=M \cdot K_N$
P_{offset}	Difference between PG9000 and RPM at the static pressure of differential mode	Pa	Determined experimentally in PG9000 differential mode operation (see Section 3.11.4.1, **Selecting Differential Mode, Setting Static Pressure, Finding RPM Offset (<1run>)**.
P_{RPM}	Current static pressure reading from reference pressure monitor	Paa	Read automatically from external atm P source specified by SETUP file. Used in differential mode only (3.12, 3.11.4.1).
ΔP_D	Differential pressure	Pa	Calculated. Differential mode only (3.11.4.1).
Γ	Surface tension coefficient	N/m	Piston-cylinder module file (3.13.1.3).
α_C	Cylinder linear thermal expansion coefficient	$°C^{-1}$	Piston-cylinder module file (3.13.1.3).
α_P	Piston linear thermal expansion coefficient	$°C^{-1}$	Piston-cylinder module file (3.13.1.3).
λ	Piston-cylinder pressure coefficient	Pa^{-1}	Piston-cylinder module file (3.13.1.3).
θ	Temperature of piston-cylinder	°C	Internal measurement, user entered value or standard as specified by SETUP file (3.12).
ρ_a	Air density	kg/m^3	Calculated from standard air density corrected for actual atmospheric pressure, ambient temperature and relative humidity (atm p, humidity and temp source are specified by SETUP file) (3.12).
ρ_m	Mass density	kg/m^3	Mass set file (3.13.1.8).

원문: Fluke Calibration PG9602/9607 메뉴얼(영문) · 제조사 원문 자료입니다. 사양은 제조사 사정에 따라 변경될 수 있습니다.

7.2.1 Calculations

PG9000 performs pressure to mass and mass to pressure calculations as follows:

- Gauge mode:

$$P_G = \frac{Mg\left(1-\frac{\rho_a}{\rho_m}\right)+2\pi\Gamma\sqrt{\frac{A_{\theta,P}}{\pi}}}{A_{\theta,P}} + P_{HG}$$

$$A_{\theta,P} = A_{20,0}\cdot 10^{-6}\cdot\left[1+(\theta-20)(\alpha_P+\alpha_C)\right](1+\lambda P_{nom})$$

- Absolute pressure by adding atmospheric pressure:

$$P_A = \frac{Mg\left(1-\frac{\rho_a}{\rho_m}\right)+2\pi\Gamma\sqrt{\frac{A_{\theta,P}}{\pi}}}{A_{\theta,P}} + P_{HA} + P_{atm}$$

$$A_{\theta,P} = A_{20,0}\cdot 10^{-6}\cdot\left[1+(\theta-20)(\alpha_P+\alpha_C)\right](1+\lambda P_{nom})$$

- Absolute pressure with vacuum reference:

$$P_A = \frac{Mg+2\pi\Gamma\sqrt{\frac{A_{\theta,P}}{\pi}}}{A_{\theta,P}} + P_{HA} + P_{vac}$$

$$A_{\theta,P} = A_{20,0}\cdot 10^{-6}\cdot\left[1+(\theta-20)(\alpha_P+\alpha_C)\right](1+\lambda P_{nom})$$

- Differential pressure (differential mode):

$$\Delta P_D = \frac{Mg+2\pi\Gamma\sqrt{\frac{A_{\theta,P}}{\pi}}}{A_{\theta,P}} + P_{HA} + P_{vac} - P_{RPM} - P_{offset}$$

$$A_{\theta,P} = A_{20,0}\cdot 10^{-6}\cdot\left[1+(\theta-20)(\alpha_P+\alpha_C)\right](1+\lambda P_{nom})$$

© 1998-2010 Fluke Calibration

원문: Fluke Calibration PG9602/9607 메뉴얼(영문) · 제조사 원문 자료입니다. 사양은 제조사 사정에 따라 변경될 수 있습니다.

we measure, we calibrate, we validate.
KOLAS 국제공인교정기관 · ISO/IEC 17025

7.2.2 Fluid Heads

7.2.2.1 Fluid Head Components

PG9000 supports three different fluid head components (see Sections 3.13.3, 3.11.7): DUT head, ATM head and Piston head. The three components are combined to create the overall head correction for each PG9000 measurement mode (see Section 7.2.2.2).

DUT head: Calculates and applies a fluid head correction to predict the defined pressure at a level other than the PG9000's reference level (see Section 3.11.7).

The DUT head is calculated following:

$$P_{H_{DUT}} = (\rho_f - \rho_a) g h_D$$

Where:

$P_{H_{DUT}}$, DUT head [Pa]	=	fluid head correction applied to the defined pressure calculated at the PG9000 reference level.
ρ_f, fluid density [kg/m^3]	=	density of the pressurized medium (oil density = 916 kg/m^3, water density = 998.2321 kg/m^3, gas densities are calculated for N_2, He or air dependent on current pressure and temperature).
ρ_a, air density [kg/m^3]	=	density of ambient air calculated using current ambient pressure, temperature and relative humidity (values as specified in the active SETUP file, see Section 3.12). Assumed to be zero when operating in absolute with a vacuum reference mode. Calculated using static pressure density measured by RPM in differential mode.
g, gravity [m/s^2]	=	acceleration due to gravity (value as specified in the active SETUP file, see Section 3.12).
h_D, DUT height [m]	=	Height of DUT above PG9000 reference level. Value is negative if below reference level.

ATM head: Calculates and applies a fluid head correction to internal or external barometer readings to correct the atmospheric pressure value to the PG9000's reference level if the barometer is reading at a different level (see Section 3.13.3).

The ATM head is calculated following:

$$P_{H_{atm}} = \rho_{as} g h_B$$

Where:

$P_{H_{atm}}$, ATM head [Pa]	=	fluid head correction applied to the internal or external barometer reading.
ρ_{as}, air density [kg/m^3]	=	standard air density of 1.2 kg/m^3.
g, gravity [m/s^2]	=	acceleration due to gravity (value as specified in the active SETUP file, see Section 3.12).
h_B, barometer height [m]	=	Height of the internal or external barometer above the PG9000 reference level. Value is negative if below reference level.

원문: Fluke Calibration PG9602/9607 메뉴얼(영문) · 제조사 원문 자료입니다. 사양은 제조사 사정에 따라 변경될 수 있습니다.

we measure, we calibrate, we validate.
㈜테솔 · www.tessol.com TS-TL-FLK-082 186 / 192
KOLAS 국제공인교정기관 · ISO/IEC 17025

TESSOL Technical Library
TS-TL-FLK-082

PISTON head: Calculates and applies a fluid head correction to compensate for the difference between the current piston position and the PG9000's reference level (see Section 3.13.3.4).

The Piston head is calculated following:

$$P_{H_P} = (\rho_f - \rho_a) g (h_P + h_{rlo})$$

Where:

P_{H_P} , Piston head [Pa]	=	fluid head correction applied to calculate defined pressure.
ρ_f, fluid density [kg/m^3]	=	Density of test fluid at current pressure.
ρ_a, air density [kg/m^3]	=	density of ambient air calculated using current ambient pressure, temperature and relative humidity (values as specified in the active SETUP file, see Section 3.12). Assumed to be zero when operating in absolute with a vacuum reference mode. Calculated using static pressure density measured by RPM in differential mode.
g, gravity [m/s^2]	=	acceleration due to gravity (value as specified in the active SETUP file, see Section 3.12).
h_P, piston height [m]	=	Height of the current piston position above PG9000 reference level.
h_{rlo}, reference level offset [m]	=	Reference level offset of the piston (see Section 3.11.7).

7.2.2.2 Overall Fluid Head Correction

The overall fluid head correction for each PG9000 mode results from combining the three head components. In general, overall head correction is given by:

$$P_H = -P_{H_{DUT}} - P_{H_{atm}} + P_{H_P}$$

Gauge mode:

$$P_{HG} = -(\rho_f - \rho_a) g h_D + (\rho_f - \rho_a) g (h_P + h_{rlo})$$

Absolute mode by adding atmospheric pressure: Air density is zero for all components except for the ATM head which is used to compensate for barometer height.

$$P_{HA} = -\rho_f g h_D - \rho_{as} g h_B + \rho_f g (h_P + h_{rlo})$$

Absolute mode with vacuum reference: Air density is zero for all terms and no barometer is used.

$$P_{HA} = -\rho_f g h_D + \rho_f g (h_P + h_{rlo})$$

Differential mode: Head correction is the same as for absolute mode with vacuum reference. Head correction for the height of the RPM is unnecessary through the use of the RPM offset.

$$P_{HA} = -\rho_f g h_D + \rho_f g (h_P + h_{rlo})$$

© 1998-2010 Fluke Calibration

원문: Fluke Calibration PG9602/9607 메뉴얼(영문) · 제조사 원문 자료입니다. 사양은 제조사 사정에 따라 변경될 수 있습니다.

TESSOL Technical Library

TS-TL-FLK-082

we measure, we calibrate, we validate.
KOLAS 국제공인교정기관 · ISO/IEC 17025

7.3 Glossary

Absolute	As in absolute pressure. Pressure expressed relative to vacuum.
Absolute by vacuum, *avac*	Absolute pressure determined by defining pressure relative to vacuum in an evacuated bell jar.
Absolute by atmosphere, *aatm*	Absolute pressure determined by adding atmospheric pressure to gauge pressure.
Adder	A value added to internal sensor readings to offset the readings (pressure adder, temperature adder, humidity adder, vacuum adder) for calibration adjustment.
Ae	Piston-cylinder effective area.
AMH	Optional automated mass handling system.
ATM Head	Pressure head correction to the barometer measurement to take into consideration the difference between the actual barometer level and the PG9000 reference level.
Crossfloat	Process of comparison of two piston cylinders in which they are connected together under pressure and the mass of one is adjusted so that both pistons float together at a common pressure.
Default	The initial value of a quantity in the PG9000 that may be changed by the user. A value entered or created for a standard configuration or on power up.
Differential	As in differential pressure. Pressure expressed relative to atmospheric or another static pressure determined by subtracting the static pressure from absolute by vacuum (differential measurement mode).
DUT (Device Under Test)	The device being tested or calibrated.
DUT Head	Fluid head correction to the pressure defined by PG9000 to predict the pressure at the level of the DUT, which may be different from the PG9000 reference level.
FS (Full Scale)	The full scale value is the maximum value or the span of a measurement range. Limits and specifications are often expressed as % FS.
g, gl	Acceleration due to gravity (g). Acceleration due to gravity at location of use (gl).
Gauge	As in gauge pressure. Pressure expressed relative to atmospheric pressure.
He	Helium gas.
Head	Fluid head, a pressure difference due to a difference in height. See also ATM head, DUT head and PISTON head.
HSTOP, LSTOP	High stop and low stop, piston maximum end of stroke positions.
InHg	Pressure unit of measure, inches of mercury.
InWa	Pressure unit of measure, inches of water.
kcm^2	Pressure unit of measure, kilogram per centimeter square.
Measurement Mode	Mode in which PG9000 is defining pressures. These include gauge (pressure relative to atmospheric pressure), absolute by atmosphere (pressure relative to vacuum determined by adding atmospheric pressure to gauge pressure), absolute by vacuum (pressure relative to vacuum determined by establishing a vacuum around the mass load), differential (pressure relative to atmospheric or another static pressure determined by subtracting the static pressure from absolute by vacuum).
MS (Mass Set)	A group of masses composed for use with a PG9000 piston gauge.
Mass Bell	The sleeve loaded onto the piston to carry other masses.
Mass Entry Mode (mass to pressure)	Operating mode in which the user enters the mass loaded on the piston and the PG9000 calculates the defined pressure. See also Pressure Entry Mode.
Medium, pressurized	The pressurized fluid.
Multiplier	A value by which internal sensor readings are multiplied to change their slope (pressure multiplier, temperature multiplier, humidity multiplier, vacuum multiplier) for calibration adjustment.
N2	Nitrogen gas.

원문: Fluke Calibration PG9602/9607 메뉴얼(영문) · 제조사 원문 자료입니다. 사양은 제조사 사정에 따라 변경될 수 있습니다.

we measure, we calibrate, we validate.
KOLAS 국제공인교정기관 · ISO/IEC 17025

Nominal Mass	The mass loaded on the piston in terms of the nominal values written on the individual masses. See also True Mass.
Normal	A conventional or standard value.
PC, P-C	Piston-cylinder, piston-cylinder module.
Pressure Entry Mode (pressure to mass)	Operating mode in which the user enters the pressure to be defined and PG9000 calculates the mass to load. See also Mass entry mode.
PISTON head	Fluid head correction based on the difference between the piston's current position and the reference level.
PRT	Platinum Resistance Thermometer. The element used in the piston-cylinder mounting post to measure temperature.
Ready/Not Ready	Indication of when conditions are present to make in tolerance pressure definitions based on specific criteria for each condition.
Reference Level	Height at which pressures are defined. PG9000 defines pressures at its reference level. Fluid head corrections correct the pressure relative to the reference level.
SETUP file	File specifying the source of values for the variables used by PG9000 to calculate defined pressure.
Static Pressure	Pressure on the low side in PG9000 differential mode.
True Mass	The actual mass loaded on the piston using the measured value of each mass. See also Nominal Mass.
User Level	Level of security that can be set to limit access to certain PG9000 functions

© 1998-2010 Fluke Calibration

원문: Fluke Calibration PG9602/9607 메뉴얼(영문) · 제조사 원문 자료입니다. 사양은 제조사 사정에 따라 변경될 수 있습니다.

7.4 Limited Warranty and Limitation of Liability

Each Fluke product is warranted to be free from defects in material and workmanship under normal use and service. The warranty period is one year and begins on the date of shipment. Parts, product repairs and services are warranted for 90 days. This warranty extends only to the original buyer or end-user customer of a Fluke authorized reseller, and does not apply to fuses, disposable batteries or to any product which, in Fluke's opinion, has been misused, altered, neglected, contaminated, or damaged by accident or abnormal conditions of operation or handling. Fluke warrants that software will operate substantially in accordance with its functional specifications for 90 days and that it has been properly recorded on non-defective media. Fluke does not warrant that software will be error free or operate without interruption.

Fluke authorized resellers shall extend this warranty on new and unused products to end-user customers only but have no authority to extend a greater or different warranty on behalf of Fluke. Warranty support is available only if product is purchased through a Fluke authorized sales outlet or Buyer has paid the applicable international price. Fluke reserves the right to invoice Buyer for importation costs of repair/replacement parts when product purchased in one country is submitted for repair in another country.

Fluke's warranty obligation is limited, at Fluke's option, to refund of the purchase price, free of charge repair, or replacement of a defective product which is returned to a Fluke authorized service center within the warranty period.

To obtain warranty service, contact your nearest Fluke authorized service center to obtain return authorization information, then send the product to that service center, with a description of the difficulty, postage and insurance prepaid (FOB Destination). Fluke assumes no risk for damage in transit. Following warranty repair, the product will be returned to Buyer, transportation prepaid (FOB Destination). If Fluke determines that failure was caused by neglect, misuse, contamination, alteration, accident or abnormal condition of operation or handling, including overvoltage failures caused by use outside the product's specified rating, or normal wear and tear of mechanical components, Fluke will provide an estimate of repair costs and obtain authorization before commencing the work. Following repair, the product will be returned to the Buyer transportation prepaid and the Buyer will be billed for the repair and return transportation charges (FOB Shipping Point).

THIS WARRANTY IS BUYER'S SOLE AND EXCLUSIVE REMEDY AND IS IN LIEU OF ALL OTHER WARRANTIES, EXPRESS OR IMPLIED, INCLUDING BUT NOT LIMITED TO ANY IMPLIED WARRANTY OF MERCHANTABILITY OR FITNESS FOR A PARTICULAR PURPOSE. FLUKE SHALL NOT BE LIABLE FOR ANY SPECIAL, INDIRECT, INCIDENTAL OR CONSEQUENTIAL DAMAGES OR LOSSES, INCLUDING LOSS OF DATA, ARISING FROM ANY CAUSE OR THEORY.

Since some countries or states do not allow limitation of the term of an implied warranty, or exclusion or limitation of incidental or consequential damages, the limitations and exclusions of this warranty may not apply to every buyer. If any provision of this Warranty is held invalid or unenforceable by a court or other decision-maker of competent jurisdiction, such holding will not affect the validity or enforceability of any other provision.

Fluke Corporation	Fluke Europe B.V.
P.O. Box 9090	P.O. Box 1186
Everett, WA 98206-9090	5602 BD Eindhoven
U.S.A.	The Netherlands

원문: Fluke Calibration PG9602/9607 메뉴얼(영문) · 제조사 원문 자료입니다. 사양은 제조사 사정에 따라 변경될 수 있습니다.

we measure, we calibrate, we validate.
㈜테솔 · www.tessol.com TS-TL-FLK-082 190 / 192
KOLAS 국제공인교정기관 · ISO/IEC 17025

TS-TL-FLK-082

Table 28. Fluke Calibration Authorized Service Providers

FLUKE CALIBRATION AUTHORIZED SERVICE PROVIDERS – PRESSURE CALIBRATION PRODUCTS			
COMPANY	**ADDRESS**	**TELEPHONE, FAX & EMAIL**	**NORMAL SUPPORT REGION**
Fluke Calibration	4765 East Beautiful Lane Phoenix AZ 85044-5318 USA	Tel 602.431.9100 Fax 602.431.9559 cal.repair@dhinstruments.com	Worldwide
Minerva Meettechniek B.V.	Chrysantstraat 1 3812 WX Amersfoort The Netherlands	Tel 31 33 46 22 000 Fax 31 33 46 22 218 info@minervaipm.com	European Union
europascal GmbH	An der Wiesenhecke 10 D-63456 Hanau Germany	Tel: +49 61 81 42 309 0 Fax: +49 61 81 42 309 22 service@europascal.de	European Union
Ohte Giken Inc Technology Center	258-1, Nakadai Kasumigaura-machi, Niihari-Gun, Ibaraki 300-0133 Japan	Tel 81/29.840.9111 Fax 81/29.840.9100 tech@ohtegiken.co.jp	Japan/Asia
Fluke Beijing Service Center	Rm. 401, SCITEC Tower, N0. 22, Jianguomenwai Dajie, Beijing 100004, PRC	Hot Line: 400.810.3435-3 Fax:(8610) 65286307 serviceinfo@fluke.com.cn	Peoples Republic of China

© 1998-2010 Fluke Calibration

원문: Fluke Calibration PG9602/9607 메뉴얼(영문) · 제조사 원문 자료입니다. 사양은 제조사 사정에 따라 변경될 수 있습니다.

Notes

원문: Fluke Calibration PG9602/9607 메뉴얼(영문) · 제조사 원문 자료입니다. 사양은 제조사 사정에 따라 변경될 수 있습니다.