DH Instruments
A Fluke Company

PG7601-SYS-AF™
Gas Operated Piston Gauge Pressure Calibration System
Operation and Maintenance Manual

NSN 6695-01-551-5125
Consists of Base System and Exchange Pack

© 2008 DH Instruments, a Fluke Company

원문: Fluke Calibration PG7601 메뉴얼(영문) · 제조사 원문 자료입니다. 사양은 제조사 사정에 따라 변경될 수 있습니다.

PG7601-SYS-AF™ OPERATION AND MAINTENANCE MANUAL

High-pressure liquids and gases are potentially hazardous. Energy stored in these liquids and gases can be released unexpectedly and with extreme force. High-pressure systems should be assembled and operated only by personnel who have been instructed in proper safety practices.

© 2008 **DH Instruments, a Fluke Company** All rights reserved.

Information in this document is subject to change without notice. No part of this document may be reproduced or transmitted in any form or by any means, electronic or mechanical, for any purpose, without the express written permission of **DH Instruments, a Fluke Company.** 4765 East Beautiful Lane Phoenix Arizona 85044-5318 USA.

DH Instruments makes sincere efforts to ensure the accuracy and quality of its published materials; however, no warranty, expressed or implied, is provided. **DH Instruments** disclaims any responsibility or liability for any direct or indirect damages resulting from the use of the information in this manual or products described in it. Mention of any product or brand does not constitute an endorsement by **DH Instruments** of that product or brand. This manual was originally composed in English and was subsequently translated into other languages. The fidelity of the translation cannot be guaranteed. In case of conflict between the English version and other language versions, the English version predominates.

DH Instruments, **DH**, **DHI**, PG7601-AF, PG7601, PPPC3, CalTool and COMPASS are trademarks, registered and otherwise, of **DH Instruments, a Fluke Company.**

Swagelok is a registered trademark of the Swagelok Company.
Krytox is a registered trademark of the Dupont de Nemours Company.

Products described in this manual are manufactured under international patents and one or more of the following U.S. patents: 6,701,791, 5,142,483, 5,257,640, 5,331,838, 5,445,035. Other U.S. and international patents pending.

Document No. 550152a-01
071001
Printed in the USA

© 2008 DH Instruments, a Fluke Company

원문: Fluke Calibration PG7601 메뉴얼(영문) · 제조사 원문 자료입니다. 사양은 제조사 사정에 따라 변경될 수 있습니다.

TABLE OF CONTENTS

TABLE OF CONTENTS I

TABLES VII

FIGURES IX

ABOUT THIS MANUAL XI

1. INTRODUCTION 1

1.1 SPECIFICATIONS 1
1.1.1 OVERALL SYSTEM SPECIFICATIONS 1
1.1.1.1 PRESSURE MEASUREMENTS 2
1.1.2 PISTON GAUGE PLATFORM (PG7601-AF) 2
1.1.2.1 EMBEDDED FEATURES 3
1.1.2.2 MEASUREMENT OF AMBIENT AND INSTRUMENT CONDITIONS 4
1.1.3 PISTON-CYLINDER MODULES (PC-7100/7600-10-L, -50, -200) 5
1.1.4 MASS SET (MS-7001-35-AF) 6
1.1.5 PRESSURE CONTROLLER (PPC3-7M-AF) 7
1.1.6 REFERENCE VACUUM PUMP (D16B) 7

2. SYSTEM AND COMPONENT OVERVIEW AND DESCRIPTION ... 9

2.1 SYSTEM OVERVIEW (PG7601-SYS-AF) 9
2.2 PISTON GAUGE PLATFORM AND TERMINAL (PG7601-AF) 12
2.2.1 PLATFORM 13
2.2.2 PG TERMINAL 14
2.3 PISTON-CYLINDER MODULES (PC-7100/7600-10-L, -50, -200) 15
2.4 MASS SET (MS-7001-35-AF) 16
2.5 PRESSURE CONTROLLER (PPC3-7M-AF) 16
2.6 REFERENCE VACUUM PUMP (D16B) 18

3. INSTALLATION 19

3.1 UNPACKING AND INSPECTION 19
3.1.1 UNPACKING AND INSPECTION OF PG7601-BAS-AF BASE SYSTEM 19
3.1.1.1 PLATFORM, TERMINAL AND BELL JAR (PG7601-AF) 19
3.1.1.2 PRESSURE CONTROLLER (PPC3-7M-AF) 20
3.1.1.3 REFERENCE VACUUM PUMP (D16B) 20
3.1.1.4 PRESSURE INTERCONNECTIONS KIT (PK-7601-P-AF) 20
3.1.1.5 VACUUM INTERCONNECTIONS KIT (PK-7601-V-AF) 21
3.1.1.6 DOCUMENTATION AND ACCESSORIES 21
3.1.2 UNPACKING AND INSPECTION OF PG7601-EXC-AF EXCHANGE PACKAGE 21
3.1.2.1 PISTON-CYLINDER MODULES (PC-7100/7600-10-L, PC-7100/7600-50, PC-7100/7600-200) AND ACCESSORIES 22
3.1.2.2 MASS SET (MS-7001-35-AF) 22
3.1.2.3 DOCUMENTATION AND ACCESSORIES 23
3.2 SITE REQUIREMENTS 23
3.3 PHYSICAL SETUP 25
3.3.1 SETTING UP THE PLATFORM 25
3.3.2 SETTING UP THE PRESSURE CONTROLLER 26
3.3.3 SYSTEM PRESSURE INTERCONNECTIONS 26
3.3.4 SETTING UP THE MASS SET 27

© 2008 DH Instruments, a Fluke Company

원문: Fluke Calibration PG7601 메뉴얼(영문) · 제조사 원문 자료입니다. 사양은 제조사 사정에 따라 변경될 수 있습니다.

we measure, we calibrate, we validate.
㈜테솔 · www.tessol.com TS-TL-FLK-094 3 / 234
KOLAS 국제공인교정기관 · ISO/IEC 17025

TS-TL-FLK-094

3.3.5 INSTALLING A PISTON-CYLINDER MODULE INTO THE PLATFORM ... 28
3.3.6 SETTING UP THE REFERENCE VACUUM PUMP AND VACUUM INTERCONNECTIONS ... 29
3.3.7 CONNECTING TEST GAS SUPPLY ... 29
3.3.8 CONNECTING CONTROL VACUUM SUPPLY ... 30

3.4 POWER UP AND VERIFICATION ... 30
3.4.1 POWER UP PLATFORM AND PRESSURE CONTROLLER ... 30
3.4.2 CHECK THAT ON-BOARD PISTON-CYLINDER MODULE AND MASS SET DIGITAL IDS ARE CORRECT ... 31
3.4.3 SET LOCAL GRAVITY VALUE ... 31
3.4.4 CHECK/SET SECURITY LEVEL ... 31
3.4.5 CHECK PROPER OPERATION OF AMBIENT CONDITION MEASUREMENTS ... 31
3.4.6 TURN ON AUTOGEN AND AUTOROTATE ... 32
3.4.7 APPLY SUPPLY PRESSURE ... 32
3.4.8 APPLY CONTROL VACUUM ... 32
3.4.9 APPLY REFERENCE VACUUM ... 32
3.4.10 SET A GAUGE MODE PRESSURE, CHECK AUTOGEN AND AUTOROTATE FUNCTIONS ... 32
3.4.11 CHECK PISTON BEHAVIOR MEASUREMENTS ... 34
3.4.12 CHECK REFERENCE VACUUM SYSTEM AND ABSOLUTE MODE OPERATION ... 34

3.5 ADDITIONAL PRECAUTIONS TO TAKE TO MAKE GOOD PRESSURE MEASUREMENTS ... 36

4. GENERAL OPERATION ... 37

4.1 OPERATING PRINCIPLES ... 37
4.1.1 FUNDAMENTAL OPERATING PRINCIPLE ... 37
4.1.2 PRESSURE CONTROL, MANUAL AND AUTOMATED ... 38
4.1.3 PRESSURE *READY/NOT READY* INDICATION ... 39
4.1.3.1 PISTON POSITION *READY/NOT READY* ... 39
4.1.3.2 PISTON ROTATION *READY/NOT READY* ... 40
4.1.3.3 VACUUM REFERENCE *READY/NOT READY* ... 40
4.1.4 PISTON POSITION ... 41
4.1.5 MASS LOADING PROTOCOL ... 42

4.2 USER INTERFACE ... 45
4.2.1 PISTON GAUGE (SYSTEM INTERFACE) ... 45
4.2.1.1 KEYPAD LAYOUT AND PROTOCOL ... 45
4.2.1.2 MAIN RUN SCREEN ... 46
4.2.1.3 GENERAL FUNCTION/MENU FLOW CHART ... 48
4.2.1.4 SOUNDS ... 48
4.2.2 PRESSURE CONTROLLER ... 49
4.2.2.1 KEYPAD LAYOUT AND PROTOCOL ... 49
4.2.2.2 DIRECT PRESSURE CONTROL KEYS ... 50
4.2.2.3 MAIN RUN SCREEN ... 51
4.2.2.4 SOUNDS ... 52

4.3 DIRECT FUNCTION KEYS ... 53
4.3.1 DIRECT FUNCTION KEYS SUMMARY ... 53
4.3.2 [P-C], VIEW AND SELECT PISTON-CYLINDER MODULES ... 53
4.3.3 [UNIT], SELECT PRESSURE UNIT OF MEASURE ... 55
4.3.4 [MODE], SELECT PRESSURE MEASUREMENT MODE ... 56
4.3.5 [SYSTEM], VIEW SYSTEM CONDITIONS MEASUREMENT SCREENS ... 57
4.3.5.1 FIRST SYSTEM RUN SCREEN ... 57
4.3.5.2 SECOND SYSTEM RUN SCREEN ... 58
4.3.6 [AMBIENT], VIEW AMBIENT CONDITIONS MEASUREMENTS SCREEN ... 59
4.3.7 [HEAD], SET FLUID HEAD CORRECTION HEIGHT ... 60
4.3.8 [ROTATE], MANAGE MOTORIZED PISTON ROTATION ... 62
4.3.8.1 <2PRE-DECEL> ... 64
4.3.9 [GEN], MANAGE AUTOMATED PRESSURE GENERATION ... 64
4.3.9.1 <2TARGET> ... 66
4.3.9.2 <3RAISE> ... 66
4.3.9.3 <4UL> ... 66
4.3.9.4 <5TOL> ... 67
4.3.9.5 <6REFLOAT> ... 67
4.3.9.6 VIEWING AND SETTING PPC3-7M-AF COM1 PORT SETTINGS ... 68
4.3.10 [RES], SET MASS LOADING RESOLUTION ... 68
4.3.11 [SET P], SET OR MEASURE A PRESSURE ... 69
4.3.11.1 [SET P] IN PRESSURE TO MASS MODE ... 71
4.3.11.2 [SET P] IN MASS TO PRESSURE MODE ... 72
4.3.11.3 COMMANDS FOR ZERO PRESSURE, ENDING A TEST ... 73
4.3.12 [P OR M], SET PRESSURE TO MASS OR MASS TO PRESSURE OPERATING MODE ... 73
4.3.13 [↻] AND [↺], [←], MANUAL CONTROL OF MOTORIZED ROTATION ... 74

원문: Fluke Calibration PG7601 메뉴얼(영문) · 제조사 원문 자료입니다. 사양은 제조사 사정에 따라 변경될 수 있습니다.

TS-TL-FLK-094

we measure, we calibrate, we validate.
㈜테솔 · www.tessol.com TS-TL-FLK-094 4 / 234
KOLAS 국제공인교정기관 · ISO/IEC 17025

TABLE OF CONTENTS

4.4 [SETUP] MENU, MANAGE PRESSURE EQUATION VARIABLE SOURCES ... 75
4.4.1 <1SELECT> ... 77
4.4.2 <2VIEW> ... 78
4.4.3 <3EDIT> ... 79
4.5 [SPECIAL] MENU ... 81
4.5.1 <1PC/MS>, MANAGE METROLOGICAL ELEMENT DIGITAL IDS ... 82
4.5.1.1 CREATE PISTON-CYLINDER MODULE ... 84
4.5.1.2 EDIT PISTON-CYLINDER MODULE ... 86
4.5.1.3 VIEW PISTON-CYLINDER MODULE ... 87
4.5.1.4 DELETE PISTON-CYLINDER MODULE ... 87
4.5.1.5 SELECT THE ACTIVE PISTON-CYLINDER MODULE ... 87
4.5.1.6 ADD MASS SET ... 88
4.5.1.7 EDIT MASS SET ... 91
4.5.1.8 VIEW MASS SET ... 92
4.5.1.9 DELETE MASS SET ... 92
4.5.1.10 SELECT MASS SET ... 92
4.5.1.11 ADD MASS LOADING BELL ... 92
4.5.1.12 EDIT MASS LOADING BELL ... 94
4.5.1.13 VIEW MASS LOADING BELL ... 94
4.5.1.14 DELETE MASS LOADING BELL ... 94
4.5.1.15 SELECT MASS LOADING BELL ... 95
4.5.2 <2PRESU>, CUSTOMIZE UNIT FUNCTION SELECTIONS ... 95
4.5.3 <3HEAD>, CUSTOMIZE FLUID HEAD FUNCTIONS ... 96
4.5.3.1 <3HEAD>, <1FLUID> ... 97
4.5.3.2 <3HEAD>, <2UNIT> ... 97
4.5.3.3 <3HEAD>, <3ATM> ... 98
4.5.3.4 <3HEAD>, <4PISTON> ... 98
4.5.4 <4PREFS>, SET USER PREFERENCES ... 98
4.5.4.1 <4PREFS>, <1SCRSVR> ... 99
4.5.4.2 <4PREFS>, <2SOUND> ... 99
4.5.4.3 <4PREFS>, <3TIME> ... 99
4.5.4.4 <4PREFS>, <4ID> ... 100
4.5.4.5 <4PREFS>, <5LEVEL> ... 101
4.5.5 <5REMOTE>, MANAGE REMOTE COMMUNICATION INTERFACES ... 103
4.5.5.1 COM1, COM2 AND COM3 (RS232) ... 104
4.5.5.2 IEEE-488 ... 104
4.5.5.3 RS232 SELF TEST ... 105
4.5.5.4 EXTERNAL BAROMETER (RPM) COMMUNICATIONS (COM2) ... 105
4.5.5.5 EXTERNAL VACUUM GAUGE COMMUNICATIONS (COM2) ... 107
4.5.6 <6GL>, SET VALUE OF LOCAL GRAVITY ... 110
4.5.7 <7CAL>, MANAGE INTERNAL MEASUREMENT SENSOR CALIBRATIONS ... 110
4.5.8 <8AMH>, OPERATE AUTOMATED MASS HANDLER (NOT INCLUDED) ... 110
4.5.9 <9RESET>, USE SYSTEM RESETS ... 111
4.5.9.1 <9RESET>, <1SETS> ... 111
4.5.9.2 <9RESET>, <2UNITS> ... 112
4.5.9.3 <9RESET>, <3COM> ... 112
4.5.9.4 <9RESET>, <4CAL> ... 112
4.5.9.5 <9RESET>, <5SETUPS> ... 113
4.5.9.6 <9RESET>, <6ALL> ... 113

5. REMOTE OPERATION ... 115

5.1 OVERVIEW ... 115
5.2 INTERFACING ... 115
5.2.1 RS232 INTERFACE ... 115
5.2.1.1 COM1 ... 116
5.2.1.2 COM2 AND COM3 ... 116
5.2.2 IEEE-488 (GPIB) ... 117
5.3 COMMANDS ... 117
5.3.1 COMMAND SYNTAX ... 117
5.3.2 COMMAND SUMMARY ... 117
5.3.3 ERROR MESSAGES ... 120
5.3.4 COMMAND DESCRIPTIONS ... 121
5.3.4.1 IEEE STD. 488.2 COMMON AND STATUS COMMANDS ... 121
5.3.4.2 PG7601-AF COMMANDS ... 123
5.4 STATUS SYSTEM ... 148
5.4.1 STATUS REPORTING SYSTEM ... 149
5.4.1.1 STATUS BYTE REGISTER ... 149
5.4.1.2 STANDARD EVENT REGISTER ... 150

 © 2008 DH Instruments, a Fluke Company

원문: Fluke Calibration PG7601 메뉴얼(영문) · 제조사 원문 자료입니다. 사양은 제조사 사정에 따라 변경될 수 있습니다.

6. GENERAL MAINTENANCE AND ADJUSTMENTS 153

6.1 OVERVIEW 153
6.2 ILLUSTRATED PARTS BREAKDOWN 154
6.3 PISTON-CYLINDER MODULES 173
6.3.1 DISASSEMBLY AND REASSEMBLY 173
6.3.1.1 PC-7100/7600-10-L (10 KPA/KG) DISASSEMBLY AND REASSEMBLY 174
6.3.1.2 PC-7100/7600-10-L (10 KPA/KG) PISTON INSERTION TOOL 178
6.3.1.3 PC-7100/7600-50 AND -200 (50 AND 200 KPA/KG) DISASSEMBLY AND REASSEMBLY 179
6.3.2 CLEANING PISTON-CYLINDERS 182
6.3.2.1 OVERVIEW 182
6.3.2.2 WATER/DETERGENT METHOD 183
6.3.2.3 QUICK METHOD 184
6.3.3 LUBRICATING PISTON-CYLINDER MODULES 185
6.4 PLATFORM 186
6.4.1 PISTON POSITION DETECTION ADJUSTMENT 186
6.4.2 DRIVE BELT REPLACEMENT 187
6.4.3 DISASSEMBLY AND REASSEMBLY OF PG7601-AF 187
6.4.3.1 PLATFORM 187
6.4.3.2 TERMINAL 188
6.5 ADJUSTING PRESSURE CONTROLLER INTERNAL PRESSURE SENSOR 188
6.6 REFERENCE VACUUM PUMP 191
6.6.1 CHECK/TOP OFF OIL LEVEL 191
6.6.2 DRAIN AND REFILL OIL 191
6.7 RELOADING EMBEDDED SOFTWARE INTO PLATFORM OR PRESSURE CONTROLLER FLASH MEMORY 192
6.8 STORAGE AND SHIPPING 192
6.8.1 SHORT AND LONG TERM STORAGE 192
6.8.2 PREPARATION FOR SHIPPING 193
6.8.2.1 PISTON-CYLINDER MODULES 193
6.8.2.2 MASS SET 193
6.8.2.3 PLATFORM 193
6.8.2.4 PRESSURE CONTROLLER 194
6.8.2.5 VACUUM PUMP 194

7. MAINTENANCE OF TRACEABILITY AND RECALIBRATION .. 195

7.1 PRINCIPLES OF SYSTEM TRACEABILITY MAINTENANCE 195
7.2 LOCAL METROLOGICAL MAINTENANCE BETWEEN RECALIBRATIONS 195
7.2.1 OVERVIEW 195
7.2.2 PLATFORM, ADJUST ON-BOARD P, T, H SENSORS 195
7.2.2.1 BAROMETRIC PRESSURE SENSOR 196
7.2.2.2 AMBIENT TEMPERATURE SENSOR 197
7.2.2.3 RELATIVE HUMIDITY SENSOR 198
7.3 RECALIBRATION 198
7.3.1 OVERVIEW 198
7.3.2 CALIBRATION OF PISTON-CYLINDER MODULES 199
7.3.2.1 PREPARING FOR CALIBRATION 199
7.3.2.2 UPDATING PISTON-CYLINDER MODULE DIGITAL IDS 199
7.3.3 CALIBRATION OF MASS SET 200
7.3.3.1 PREPARING FOR CALIBRATION 200
7.3.3.2 UPDATING MASS SET DIGITAL ID 200
7.3.4 CALIBRATION OF PISTON-CYLINDER MODULE TEMPERATURE SENSOR 200
7.3.4.1 OVERVIEW 200
7.3.4.2 PROCEDURE 201
7.3.4.3 CALCULATING AND UPDATING PISTON-CYLINDER TEMPERATURE SENSOR INFORMATION 201
7.3.5 CALIBRATION OF RESIDUAL VACUUM GAUGE 202
7.3.5.1 OVERVIEW 202
7.3.5.2 PROCEDURE 203
7.3.5.3 CALCULATING AND UPDATING VACUUM GAUGE CALIBRATION INFORMATION 204

원문: Fluke Calibration PG7601 메뉴얼(영문) · 제조사 원문 자료입니다. 사양은 제조사 사정에 따라 변경될 수 있습니다.

TS-TL-FLK-094

we measure, we calibrate, we validate.
㈜테솔 · www.tessol.com TS-TL-FLK-094 6 / 234
KOLAS 국제공인교정기관 · ISO/IEC 17025

TABLE OF CONTENTS

7.4 MANAGING METROLOGICAL ELEMENT DIGITAL IDS WITH CALTOOL™ FOR PG7000 SOFTWARE 205
7.4.1 OVERVIEW 205
7.4.2 OPERATION 205
7.4.2.1 GETTING STARTED 206
7.4.2.2 PROCESSING A NEW DIGITAL ID FILE (AFTER RECALIBRATION) 207
7.4.2.3 STORING DIGITAL IDS FROM THE PG7601-AF IN THE CALTOOL DATABASE OR TO *.DID FILE 207
7.4.2.4 ARCHIVING DIGITAL IDS 208

8. TROUBLESHOOTING 209

8.1 OVERVIEW 209

9. APPENDIX 213

9.1 CONVERSION OF NUMERICAL VALUES 213
9.1.1 PRESSURE 213
9.2 DEFINED PRESSURE CALCULATIONS 213
9.2.1 PG7601-AF 215
9.2.2 FLUID HEADS 215
9.2.2.1 FLUID HEAD COMPONENTS 215
9.2.2.2 OVERALL FLUID HEAD CORRECTION 217
9.3 GLOSSARY 217
9.4 WARRANTY STATEMENT 219

 © 2008 DH Instruments, a Fluke Company

원문: Fluke Calibration PG7601 메뉴얼(영문) · 제조사 원문 자료입니다. 사양은 제조사 사정에 따라 변경될 수 있습니다.

NOTES

원문: Fluke Calibration PG7601 메뉴얼(영문) · 제조사 원문 자료입니다. 사양은 제조사 사정에 따라 변경될 수 있습니다.

TABLES

Table 1. Base system, PG7601-BAS-AF, packing guide 19
Table 2. Platform, PG7601-AF, packing list 20
Table 3. Pressure interconnections kit, PK-7601-P-AF, packing list 20
Table 4. Vacuum interconnections kit, PK-7601-V-AF, packing list 21
Table 5. Base system accessories kit packing list 21
Table 6. Exchange pack, PG7601-EXC-AF, packing guide 22
Table 7. Piston-cylinder modules, PC-7100/7600-10-L, PC-7100/7600-50, PC-7100/7600-200, packing list 22
Table 8. Mass set, MS-7001-35-AF, packing list 23
Table 9. Exchange pack accessories packing list 23
Table 10. Summary of PG7601-AF PG Terminal direct function key operations 53
Table 11. SETUP file choices, factory preferred choice and normal value 77
Table 12. Piston-cylinder module digital ID fields 84
Table 13. Mass set digital ID fields 88
Table 14. Mass loading bell digital ID fields 93
Table 15. Pressure units of measure available 95
Table 16. Security levels - functions NOT executed per function/level 102
Table 17. COM1, COM2 and COM3 available settings 104
Table 18. COM1 DB-9F pin designation 116
Table 19. COM2 and COM3 DB-9M pin designation 116
Table 20. Command summary 118
Table 21. Error messages 120
Table 22. Status byte register 149
Table 23. Standard event register 150
Table 24. Mechanical maintenance procedures 153
Table 25. Top Level Illustrated Parts Breakdown (see Figure 23) 154
Table 26. PG7601 Illustrated Parts Breakdown for Mass Set, Cases, and Covers (see Figure 24) 156
Table 27. PG7601 Illustrated Parts Breakdown for Piston Cylinders (see Figure 25) 157
Table 28. PG7601 Illustrated Parts Breakdown for Piston Cylinder Cases (see Figure 26) 157
Table 29. PG7601 Illustrated Parts Breakdown for PG Main Board (see Figure 27) 159
Table 30. PG7601 Illustrated Parts Breakdown for PG Base Underside (see Figure 28) 160
Table 31. PG7601 Illustrated Parts Breakdown for PG Base Outside (see Figure 29) 162
Table 32. PG7601 Illustrated Parts Breakdown for PG Terminal Outside (see Figure 30) 163
Table 33. PG7601 Illustrated Parts Breakdown for PG Terminal Inside (see Figure 31) 164
Table 34. PG7601 Illustrated Parts Breakdown for PPC3 Outside (see Figure 32) 165
Table 35. PG7601 Illustrated Parts Breakdown for PPC3 Pneumatic Module (see Figure 33) 167
Table 36. PG7601 Illustrated Parts Breakdown for PPC3 Inside (see Figure 34) 169
Table 37. PG7601 Illustrated Parts Breakdown for PPC3 Manifold detail (see Figure 35) 170
Table 38. PG7601 Illustrated Parts Breakdown for PK-7601-P-AF (see Figure 36) 171
Table 39. PG7601 Illustrated Parts Breakdown for Accessories Kit (see Figure 37) 172

© 2008 DH Instruments, a Fluke Company

원문: Fluke Calibration PG7601 메뉴얼(영문) · 제조사 원문 자료입니다. 사양은 제조사 사정에 따라 변경될 수 있습니다.

we measure, we calibrate, we validate.
㈜테솔 · www.tessol.com TS-TL-FLK-094 9 / 234
KOLAS 국제공인교정기관 · ISO/IEC 17025

TS-TL-FLK-094

Table 40. PG7601-AF mounting post wire colors, description and location 188
Table 41. Metrological maintenance procedures 195
Table 42. Recalibration requirements 199
Table 43. Troubleshooting checklist 209
Table 44. Pressure unit of measure conversions 213
Table 45. Defined pressure calculation variables 214
Table 46. DHI Authorized Service Providers 219

원문: Fluke Calibration PG7601 메뉴얼(영문) · 제조사 원문 자료입니다. 사양은 제조사 사정에 따라 변경될 수 있습니다.

FIGURES

Figure 1. System, PG7601-SYS-AF, standard installation 10
Figure 2. System, PG7601-SYS-AF, pneumatic schematic 11
Figure 3. System, PG7601-SYS-AF, communications schematic 11
Figure 4. Piston gauge operating principle 12
Figure 5. Platform, PG7601-AF, rear view 13
Figure 6. PG Terminal front panel 14
Figure 7. PG Terminal rear panel 14
Figure 8. Piston-cylinder modules, PC-7100/7600-10-L, -50, -200 15
Figure 9. Mass set, MS-7100-35-AF 16
Figure 10. Pressure controller, PPC3-7M-AF, front panel 17
Figure 11. Pressure controller, PPC3-7M-AF, rear panel 17
Figure 12. Reference vacuum pump, D16B, front and side views 18
Figure 13. Piston-cylinder module installation 28
Figure 14. Piston gauge operating principle 37
Figure 15. Piston stroke and zones 42
Figure 16. PG Terminal keypad layout 45
Figure 17. Platform MAIN run screen display fields 47
Figure 18. RUN screen flow chart 48
Figure 19. Pressure controller keypad layout 49
Figure 20. Pressure controller direct pressure control keys 50
Figure 21. Pressure controller MAIN run screen display fields 52
Figure 22. Status byte register 149
Figure 23. Top Level Illustrated Parts Breakdown for PG7601-SYS-AF 155
Figure 24. PG7601 Illustrated Parts Breakdown for Mass Sets, Cases, and Covers 156
Figure 25. PG7601 Illustrated Parts Breakdown for Piston Cylinders 158
Figure 26. PG7601 Illustrated Parts Breakdown for Piston Cylinder Cases 158
Figure 27. PG7601 Illustrated Parts Breakdown for PG Main Board 159
Figure 28. PG7601 Illustrated Parts Breakdown for PG Base Underside 161
Figure 29. PG7601 Illustrated Parts Breakdown for PG Base Outside 162
Figure 30. PG7601 Illustrated Parts Breakdown for PG Terminal Outside 163
Figure 31. PG7601 Illustrated Parts Breakdown for PG Terminal Inside 164
Figure 32. PG7601 Illustrated Parts Breakdown for PPC3 Outside 166
Figure 33. PG7601 Illustrated Parts Breakdown for PPC3 Pneumatic Module 168
Figure 34. PG7601 Illustrated Parts Breakdown for PPC3 Inside 169
Figure 35. PG7601 Illustrated Parts Breakdown for PPC3 Manifold detail 170
Figure 36. PG7601 Illustrated Parts Breakdown for PK-7601-P-AF 171
Figure 37. PG7601 Illustrated Parts Breakdown for Accessories Kit 172
Figure 38. 10 kPa/kg piston-cylinder module (expanded view) 177
Figure 39. Gas piston-cylinder module sleeve nut tool 177
Figure 40. 10 kPa/kg piston insertion tool 178
Figure 41. 50, 200 kPa/kg gas piston-cylinder modules (expanded view) 182
Figure 42. Piston-cylinder module lubrication chart 186
Figure 43. Vacuum gauge calibration setup 204

© 2008 DH Instruments, a Fluke Company

원문: Fluke Calibration PG7601 메뉴얼(영문) · 제조사 원문 자료입니다. 사양은 제조사 사정에 따라 변경될 수 있습니다.

TS-TL-FLK-094

we measure, we calibrate, we validate.
㈜테솔 · www.tessol.com TS-TL-FLK-094 11 / 234
KOLAS 국제공인교정기관 · ISO/IEC 17025

NOTES

원문: Fluke Calibration PG7601 메뉴얼(영문) · 제조사 원문 자료입니다. 사양은 제조사 사정에 따라 변경될 수 있습니다.

ABOUT THIS MANUAL

This manual provides the user with the information necessary to operate and maintain a PG7601-SYS-AF gas operated piston gauge system.

Before using the manual, take a moment to familiarize yourself with the Table of Contents structure. All first time PG7601-AF users should read Section 2 and 4. Section 5 covers remote communication with an external computer. Sections 6 and 7 provide maintenance and calibration information. Section 1 is a quick troubleshooting guide. Use the information in Section 1 to troubleshoot unexpected PG7601-AF behavior based on the symptoms of that behavior.

Certain words and expressions have specific meaning as they pertain to PG7601-AFs. The Glossary (see Section 9.3) is useful as a quick reference for the definition of specific words and expressions as they are used in this manual.

The PG7601-SYS-AF system includes a PPC3-7M-AF pressure controller. This manual covers the pressure controller to the extent necessary for normal operation of the PG7601-AF system. The PPC3-7M-AF has a complete, independent manual that is included on the PG7601-SYS-AF Support Disc.

FOR THOSE OF YOU WHO "DON'T READ MANUALS", GO DIRECTLY TO SECTION 3.3 TO SET UP YOUR PG7601-AF. THEN GO TO SECTION 3.5. THIS WILL GET YOU RUNNING QUICKLY WITH MINIMAL RISK OF CAUSING DAMAGE TO YOURSELF OR YOUR PG7601-AF. THEN… WHEN YOU HAVE QUESTIONS OR START TO WONDER ABOUT ALL THE GREAT FEATURES YOU MIGHT BE MISSING, GET INTO THE MANUAL!

Manual Conventions

(CAUTION) is used throughout the manual to identify user warnings and cautions.

(NOTE) is used throughout the manual to identify operating and applications advice and additional explanations.

[ ] indicates direct function keys (e.g., **[UNIT]**).

< > indicates PG7601-AF screen displays (e.g., **<1yes>**)

© 2008 DH Instruments, a Fluke Company

원문: Fluke Calibration PG7601 메뉴얼(영문) · 제조사 원문 자료입니다. 사양은 제조사 사정에 따라 변경될 수 있습니다.

we measure, we calibrate, we validate.
KOLAS 국제공인교정기관 · ISO/IEC 17025
㈜테솔 · www.tessol.com TS-TL-FLK-094 13 / 234
TS-TL-FLK-094

NOTES

원문: Fluke Calibration PG7601 메뉴얼(영문) · 제조사 원문 자료입니다. 사양은 제조사 사정에 따라 변경될 수 있습니다.

1. INTRODUCTION

PG7601-SYS-AF is a very high performance pressure calibration system for the validation and calibration of pressure measuring devices using gas as the pressurized medium. It operates on the piston gauge principle. Pressure is defined by balancing it against the force exerted by a known mass accelerated by gravity on the effective area of a piston-cylinder.

PG7601-SYS-AF covers the pressure range of 7 to 7000 kPa (1 to 1 000 psi) in absolute and gauge modes with semi-automated operation and state of the art measurement uncertainty.

A PG7601-SYS-AF is made up of:

PG7601-BAS-AF, p/n 402351, the “base” system, including the piston gauge platform, pressure controller, vacuum pump and interconnecting hardware (everything except the piston-cylinder modules and masses).

PG7601-EXC-AF, p/n 402350, the “exchange package”, including the piston gauge’s three different size piston-cylinder modules and the mass set.

1.1 SPECIFICATIONS

1.1.1 OVERALL SYSTEM SPECIFICATIONS

Power requirements	
Instruments	85 to 264 VAC, 50/60 Hz, 52 VA max. consumption
Reference vacuum pump (D16B)	100 to 120 VAC, 50/60 Hz, 1430 VA max. consumption, full load 9.4 to 13 A
Operating temperature range	15 to 35 °C
Storage temperature range	5 to 90 °C (vacuum pump), -40 to 100 °C (other components)
Operating humidity range	5 to 95% R.H., non-condensing
Storage humidity range	5 to 95% R.H., non-condensing
Dimensions	
Bench space needed for installation	65 cm x 56 cm (65 in. x 22 in.)
Weight (shipping)	
PG7601-AF platform in case	36 kg (79 lb)
PG7601-AF vacuum bell jar	5 kg (11 lb)
PPC3-7M-AF pressure controller	18 kg (40 lb)
D16B vacuum pump	40 kg (88 lb)
Base system accessories	12 kg (26 lb)
35 kg mass set, main masses case	35 kg (77 lb)
35 kg mass set, fractional masses case	20 kg (44 lb)
(3) piston-cylinder modules in case	10 kg (22 lb)
Exchange pack accessories	6 kg (13 lb)
System external communication ports	RS 232 (COM1), IEEE-488
Overall pressure ranges Actual range depends on piston-cylinder installed	7 kPa to 7 MPa (1 to 1000 psi), gauge and absolute
Operating media	air, helium, nitrogen

© 2008 DH Instruments, a Fluke Company

원문: Fluke Calibration PG7601 메뉴얼(영문) · 제조사 원문 자료입니다. 사양은 제조사 사정에 따라 변경될 수 있습니다.

TS-TL-FLK-094

we measure, we calibrate, we validate.
KOLAS 국제공인교정기관 · ISO/IEC 17025
㈜테솔 · www.tessol.com TS-TL-FLK-094 15 / 234

Pressure connections

Device under test (DUT)	Swagelok® SS-QC4-B1-400 quick connector with quick connector stems of 1/4 in. NPT F, 1/8 in. NPT F, AN4 M, 1/4 in. Swage
Test pressure supply (PPC3)	1/8 in. NPT F
Control vacuum supply	1/8 in. NPT F

1.1.1.1 PRESSURE MEASUREMENTS

The pressure measurement specifications of the PG7601-AF depend upon the piston-cylinder module used.

PC-7100/7600-10-L (10 kPa/kg)

Sensitivity[1]	0.02 Pa + 0.5 ppm
Reproducibility[2]	± 4 ppm
Measurement uncertainty[3]	± (0.2 Pa + 15 ppm)

PC-7100/7600-50 (50 kPa/kg)

Sensitivity[1]	0.1 Pa + 0.5 ppm
Reproducibility[2]	± 4 ppm
Measurement uncertainty[3]	± (0.5 Pa + 20 ppm)

PC-7100/7600-200 (200 kPa/kg)

Sensitivity[1]	0.4 Pa + 0.5 ppm
Reproducibility[2]	± 6 ppm
Measurement uncertainty[3]	± (2 Pa + 25 ppm)

1. Sensitivity: The smallest variation in input detectable in output.

2. Reproducibility: Combined long term stability of piston-cylinder effective area and masses predicted for 30 months.

3. Measurement uncertainty: Maximum deviation of the PG7601-AF indicatied pressure from the true value of pressure, in gauge and absolute measurement modes, at the PG7601-AF reference level including precision, predicted 30 month stability, temperature effect and calibration uncertainty, combined and expanded (k=2) following the ISO "Guide to the Expression of Uncertainty in Measurement. Assumes the PG7601-AF platform sensors are properly adjusted, use of MS-7001-35-AF mass set with measurement uncertainty of ± 5 ppm, uncertainty of not more than ± 2 ppm in the value of local acceleration due to gravity entered into the PG7601-AF Terminal.

1.1.2 PISTON GAUGE PLATFORM (PG7601-AF)

Power requirements	85 to 264 VAC, 50/60 Hz, 22 VA max. consumption.
Operating temperature range	15 to 25 °C
Weight	
Instrument platform	17 kg (37 lb)
PG Terminal	1.4 kg (3 lb)
Dimensions	
Instrument platform	36 cm H (top of bell jar) x 40 cm W x 35 cm D (14.5 in. x 15.8 in. x 13.8 in.)
PG Terminal	12 cm H x 15 cm W x 20 cm D (4.7 in. H x 5.9 in. W x 7.9 in. D)
Microprocessors	
Instrument platform	Motorola 68302
PG Terminal	Hitachi 64180
Communication ports	
RS232	COM1: Host computer communications COM2: Not used (may be used for optional external barometer or vacuum gauge) COM3: PPC3 pressure controller communications
IEEE-488	Host comptuer

원문: Fluke Calibration PG7601 메뉴얼(영문) · 제조사 원문 자료입니다. 사양은 제조사 사정에 따라 변경될 수 있습니다.

Overall pressure range	7 kPa to 7 MPa (1 to 1000 psi), gauge and absolute (actual range depends on piston-cylinder selected)
Operating media	air, helium, nitrogen
Mass load range	0.7 to 36.2 kg
Pressure connections	
TEST port	DH200 (for 1/4 in. OD tube, equivalent to AE SF250C, HIP LF4)
Bell jar vent (**VACUUM**) port	DH200
Reference vacuum pump down port	KF25
CE Conformance	Available, must be specified.

1.1.2.1 EMBEDDED FEATURES

- Local control with 2 x 20 vacuum fluorescent display and 4 x 4 function driven keypad.
- Real time (1 second update rate) display and measurement of ambient (pressure, temperature, humidity) and instrument (piston-cylinder temperature, piston position, piston drop rate, piston rotation rate, piston rotation decay rate, reference vacuum) conditions.
- Real time (1 second update rate) mass-to-pressure and pressure-to-mass calculations taking into consideration all environmental and operational variables.
- Full gas and liquid fluid head corrections including DUT head correction and piston position head correction.
- Adjustable mass loading resolution (0.01 g to 0.1 kg).
- Audible prompts of instrument status (piston movement, Ready/Not Ready indication) with override capability.
- Integrated automated mass handling (optional).
- Interfacing and automatic exploitation of optional external barometer via RS232 (optional).
- Interfacing and automatic exploitation of external vacuum gauge via RS232 (optional).
- Storage and one step activation of metrological data digital IDs on up to 18 piston-cylinder modules, (3) mass sets and (3) mass loading bells.
- Continuous pressure *Ready/Not Ready* indication based on measured conditions.
- Motorized, intelligent piston drive system based measured rotation rate with operator alert and manual override.
- Integrated automated pressure control with PPC3-7M-AF pressure controller.
- Full RS232 and IEEE-488 communications with multi-level commands to set and read all instrument functions.

© 2008 DH Instruments, a Fluke Company

원문: Fluke Calibration PG7601 메뉴얼(영문) · 제조사 원문 자료입니다. 사양은 제조사 사정에 따라 변경될 수 있습니다.

TS-TL-FLK-094

we measure, we calibrate, we validate.
KOLAS 국제공인교정기관 · ISO/IEC 17025

1.1.2.2 MEASUREMENT OF AMBIENT AND INSTRUMENT CONDITIONS

Temperature	Ambient	Piston Cylinder Module
Range	15 to 25 °C	15 to 25 °C
Resolution	0.1	0.01
Measurement uncertainty	± 1	± 0.1

Barometric Pressure with Internal Sensor

Range	70 to 110 kPa
Resolution	10 Pa
Measurement uncertainty	± 140 Pa

Barometric pressure can also be read automatically with any RS232 device such as a **DHI** RPM (not included in PG7601-SYS-AF).

Relative Humidity

Range	5 to 95 % RH
Resolution	1 % RH
Measurement uncertainty	± 10 % RH

Piston Position

Range	± 4.5 mm
Resolution	0.1 mm
Measurement uncertainty	± 0.2 mm

Piston Rotation
(Rate and deceleration)

Range	2 to 99 rpm
Resolution	1 rpm

Vacuum

Range	0 to 20 Pa
Resolution	0.1 Pa
Measurement uncertainty	± 0.1 Pa or 10 % of reading, whichever is greater

© 2008 DH Instruments, a Fluke Company

원문: Fluke Calibration PG7601 메뉴얼(영문) · 제조사 원문 자료입니다. 사양은 제조사 사정에 따라 변경될 수 있습니다.

1.1.3 PISTON-CYLINDER MODULES (PC-7100/7600-10-L, -50, -200)

The PG7601-SYS-AF piston-cylinders are integrated modules including mounting hardware delivered in individual shipping and storage bullet cases.

PC-7100/7600-10-L	**Nominal mass to pressure 10 kPa/kg (1.5 psi/kg)**
Range	7 to 350 kPa (1 to 50 psi)
Operation	Gas operated, gas lubricated
Piston material	Tungsten carbide
Nominal mass of piston assembly	0.4 kg
Cylinder material	Tungsten carbide
Nominal diameter	35 mm
Nominal area	1 000 mm^2
Mounting system	Simple free deformation
Typical drop rate (35 kg load)	0.1 mm/min
PC-7100/7600-50	**Nominal mass to pressure 50 kPa/kg (7.5 psi/kg)**
Range	25 to 1750 kPa (3.6 to 254 psi)
Operation	Gas operated, gas lubricated
Piston Material	Tungsten carbide
Nominal mass of piston assembly	0.2 kg
Cylinder Material	Tungsten carbide
Nominal Diameter	16 mm
Nominal Area	200 mm^2
Mounting system	Negative free deformation
Typical drop rate (35 kg load)	0.5 mm/min
PC-7100/7600-200	**Nominal mass to pressure 200 kPa/kg (14.5 psi/kg)**
Range	100 to 7000 kPa (14.5 to 1015 psi)
Operation	Gas operated, gas lubricated
Piston Material	Tungsten carbide
Nominal mass of piston assembly	0.2 kg
Cylinder Material	Tungsten carbide
Nominal Diameter	8 mm
Nominal Area	50 mm^2
Mounting System	Negative free deformation
Typical drop rate (35 kg load)	1.0 mm/min

 © 2008 DH Instruments, a Fluke Company

원문: Fluke Calibration PG7601 메뉴얼(영문) · 제조사 원문 자료입니다. 사양은 제조사 사정에 따라 변경될 수 있습니다.

1.1.4 MASS SET (MS-7001-35-AF)

Set composition	1 x 4.5 kg disc(makeup mass) 5 x 5 kg disc 2 x 2 kg disc 1 x 1 kg disc 1 x 0.5 kg puck 2 x 0.2 kg puck 1 x 0.1 kg puck 1 x 0.3 kg mass loading bell Trim mass set of 50 g to 0.01 g (total 100 g)
Mass discs and pucks	
Material	304L non-magnetic stainless steel
Finish	Electropolished
Adjustment tolerance	± 20 ppm of nominal value
Uncertainty in measured values	± 5 ppm
Mass loading bell	
Material	6AL-4V titanium (bell and hanger), 304L stainless steel (adjustment ring), nickel plated 1018 steel (speed ring)
Finish	Mechanically polished
Adjustment tolerance	± 20 ppm of nominal value
Uncertainty in measured value	± 8 mg
Trim masses < 50g	
Adjustment tolerance	Adjusted to nominal value
Uncertainty in measured value	± 1 mg

© 2008 DH Instruments, a Fluke Company

원문: Fluke Calibration PG7601 메뉴얼(영문) · 제조사 원문 자료입니다. 사양은 제조사 사정에 따라 변경될 수 있습니다.

1.1.5 PRESSURE CONTROLLER (PPC3-7M-AF)

Power requirements	85 to 264 VAC, 50/60 Hz, 30 VA max consumption
Operating temperature range	15 to 35 °C
Weight	12.7 kg (28.2 lb) approx
Microprocessors	Motorola 68302, 16 MHz
Communication ports	RS232 (COM1), RS232 (COM2), IEEE-488.2
Fuses	1 A, 250 VAC fuse, 5 x 20 mm, time lag type fuse
	Internal power supply fuse not replaceable by operator: 2A, 250 V (UV 440-2 power supply), 3.15A, 250 V (NFS40-7612 power supply)
Pressure range	7 kPa to 7 MPa (1 to 1000 psi), gauge and absolute
Operating medium	Any clean, dry, non-corrosive gas
Pressure connections	SUPPLY: 1/8 in. NPT F TEST(+): 1/8 in. NPT F TEST(-): 1/8 in. NPT F ATM (Vent):10-32 UNF EXHAUST:1/4 in. NPT F
Test pressure supply	7.7 MPa (1100 psi)
Control vacuum supply	Ultimate pressure lower than 2 kPa (0.3 psia); capacity 85 slm (3 cfm) min
Pressure limits	
Maximum working pressure	7.03 MPa (1020 psi)
Maximum supply pressure	9.6 MPa (1 400 psi)
On-board utility sensor	
Resolution	0.001 % of span
Precision	0.1 % of span

The pressure measurements made by the PPC3-7M-AF utility sensor are used only for pressure control and indication. They have no metrological function therefore they do not require traceable calibration. Adjustment of the PPC3 utility sensor is performed only for operational reasons (see Section 6.5).

1.1.6 REFERENCE VACUUM PUMP (D16B)

Power requirements	100 to 120 VAC, 50/60 Hz, 1430 W max consumption, full load 9.4 to 13 A
Operating temperature range	12 to 40 °C
Weight	26 kg (57 lb) approx
Oil capacity	0.5 l (1 qt)
Nominal pumping speed	18.9 m^3/h (11.1 cfm)
Pumping speed	16.5 m^3/h (9.7 cfm)
Ultimate total pressure	0.2 Pa (1.5 mTorr)
Pressure connections (intake and exhauts)	KF25

© 2008 DH Instruments, a Fluke Company

원문: Fluke Calibration PG7601 메뉴얼(영문) · 제조사 원문 자료입니다. 사양은 제조사 사정에 따라 변경될 수 있습니다.

we measure, we calibrate, we validate.
KOLAS 국제공인교정기관 · ISO/IEC 17025

NOTES

원문: Fluke Calibration PG7601 메뉴얼(영문) · 제조사 원문 자료입니다. 사양은 제조사 사정에 따라 변경될 수 있습니다.

2. System and Component Overview and Description

2.1 SYSTEM OVERVIEW (PG7601-SYS-AF)

PG7601-SYS-AF is a very high performance pressure calibration system for the validation and calibration of pressure measuring devices using gas as the pressurized medium in the range of 7 to 7000 kPa (1 to 1 000 psi).

A PG7601-SYS-AF is made up of:

PG7601-BAS-AF, the "base system". The base system is the operational piston gauge system, not including the piston-cylinder modules and mass set. The base system includes:

- PG7601-AF piston gauge platform with PG Terminal and vacuum bell jar
- PPC3-7M-AF pressure controller
- D16B reference vacuum pump
- Pressure and vacuum interconnecting hardware packages

PG7601-EXC-AF, the "exchange package". The exchange package is the system's metrological elements: the piston-cylinder modules and mass set. The exchange package includes:

- (3) piston-cylinder modules, PC-7100/7600-10-L, -50 and -200.
- MS-7001-35-AF 35 kg mass set

The following figures in this section describe the PG7601-SYS-AF system:

Figure 1. System, PG7601-SYS-AF, standard installation

Figure 2. System, PG7601-SYS-AF, system pneumatic schematic

Figure 3. System, PG7601-SYS-AF, electrical and communications schematic

© 2008 DH Instruments, a Fluke Company

원문: Fluke Calibration PG7601 메뉴얼(영문) · 제조사 원문 자료입니다. 사양은 제조사 사정에 따라 변경될 수 있습니다.

TESSOL Technical Library

TS-TL-FLK-094

we measure, we calibrate, we validate.
㈜테솔 · www.tessol.com TS-TL-FLK-094 23 / 234
KOLAS 국제공인교정기관 · ISO/IEC 17025

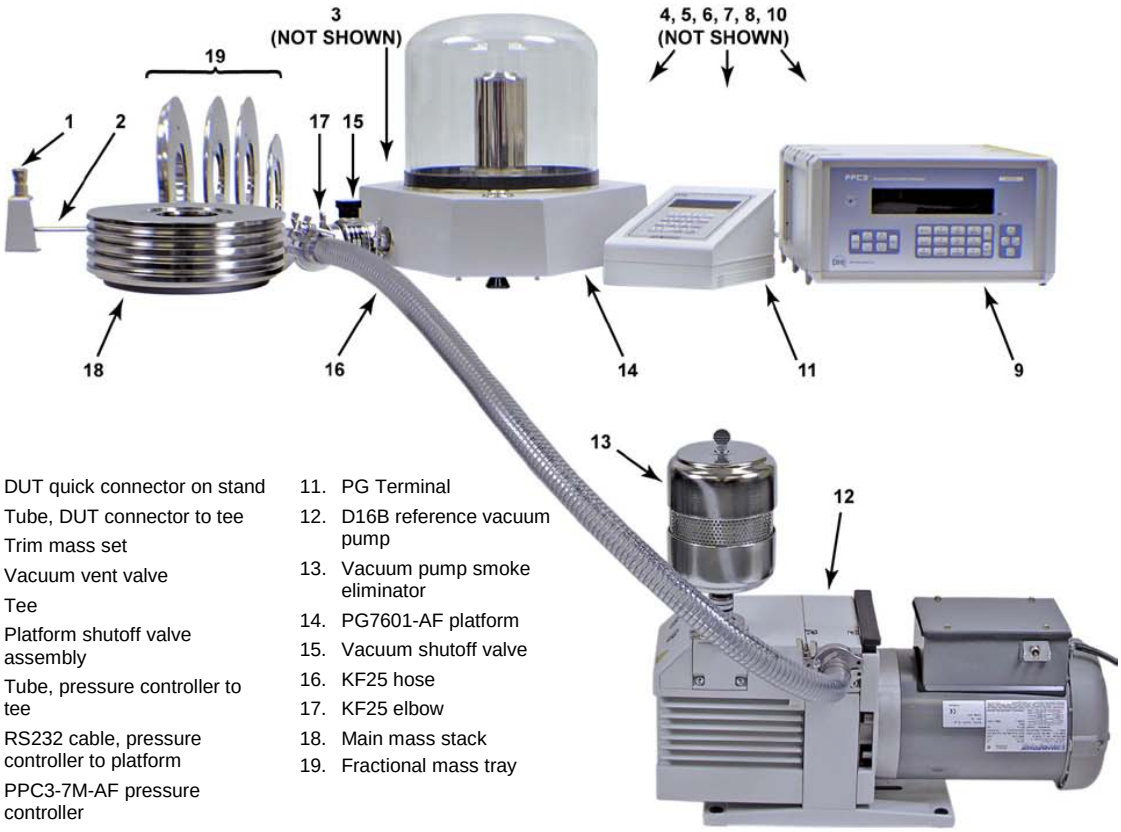

1. DUT quick connector on stand
2. Tube, DUT connector to tee
3. Trim mass set
4. Vacuum vent valve
5. Tee
6. Platform shutoff valve assembly
7. Tube, pressure controller to tee
8. RS232 cable, pressure controller to platform
9. PPC3-7M-AF pressure controller
10. PG Terminal to platform cable
11. PG Terminal
12. D16B reference vacuum pump
13. Vacuum pump smoke eliminator
14. PG7601-AF platform
15. Vacuum shutoff valve
16. KF25 hose
17. KF25 elbow
18. Main mass stack
19. Fractional mass tray

Figure 1. System, PG7601-SYS-AF, standard installation

원문: Fluke Calibration PG7601 메뉴얼(영문) · 제조사 원문 자료입니다. 사양은 제조사 사정에 따라 변경될 수 있습니다.

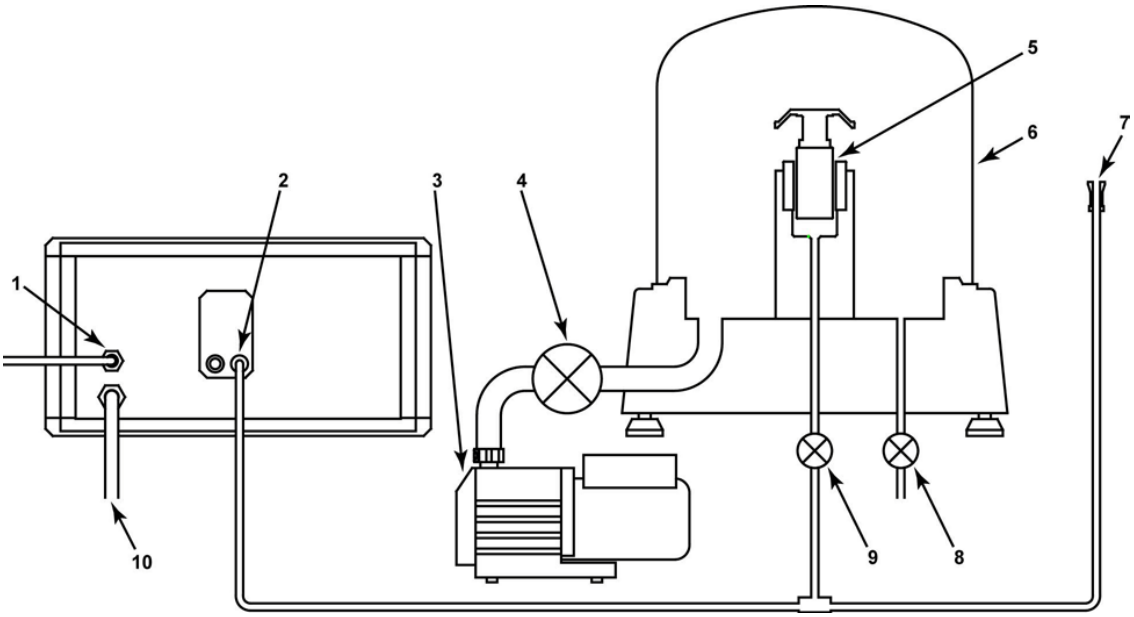

1. Test pressure supply
2. Pressure controller connection
3. Reference vacuum pump
4. Vacuum shutoff valve
5. Piston-cylinder module
6. Reference vacuum bell jar (removed in gauge measurement mode)
7. DUT connection
8. Vacuum vent valve
9. Platform shutoff valve
10. Control vacuum supply

Figure 2. System, PG7601-SYS-AF, pneumatic schematic

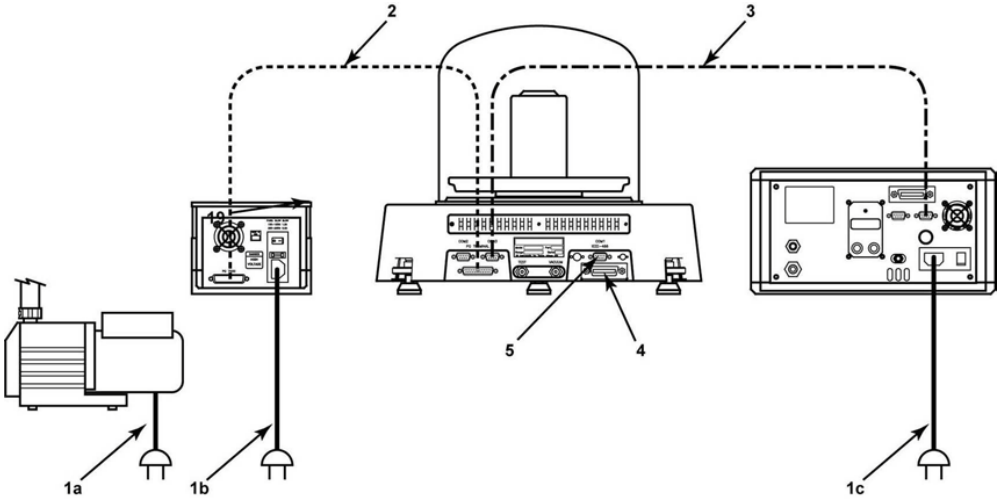

1. Electrical power cords
2. PG Terminal to PG7601-AF platform data and power connection
3. PG7601-AF platform to PPC3-7M-AF pressure controller connection (RS232)
4. PG7601-SYS-AF system remote communications (RS232)
5. PG7601-SYS-AF system remote communications (IEEE-488)

Figure 3. System, PG7601-SYS-AF, communications schematic

© 2008 DH Instruments, a Fluke Company

원문: Fluke Calibration PG7601 메뉴얼(영문) · 제조사 원문 자료입니다. 사양은 제조사 사정에 따라 변경될 수 있습니다.

2.2 PISTON GAUGE PLATFORM AND TERMINAL (PG7601-AF)

The heart of the PG7601-SYS-AF is the PG7601-AF gas operated piston gauge and its piston-cylinder modules and mass set.

The PG7601-AF operates on the principle of the piston gauge in which pressure is defined by balancing it against a known force on a known area (see Figure 4). The known area is defined by a vertically mounted piston rotating in a cylinder and the known force is applied to the piston by loading it with known mass subjected to acceleration due to gravity. When the force applied by the pressure and the force applied by the mass accelerated by gravity are in equilibrium, the piston floats and the pressure under the piston remains constant. The pressure can be calculated following the equation in Figure 4. The pressurized gas under the piston also lubricates the gap between the piston and the cylinder. When floating, the piston must be rotating to keep it well centered in the cylinder and perfectly mobile.

The system includes three piston cylinder modules and a 35 kg mass set. The combination provides three ranges of 7 to 350 kPa (1 to 50 psi), 25 to 1750 kPa (3.6 to 260 psi) and 100 to 7 000 kPa (14.5 to 1000 psi). The PG7601-AF platform includes a bell jar that can be evacuated using the supplied reference vacuum pump so that pressure can be defined against vacuum (absolute mode) or atmosphere (gauge mode). The PPC3-7M-AF pressure controller adjusts pressure automatically or manually to float the piston (see Section 4.1.2).

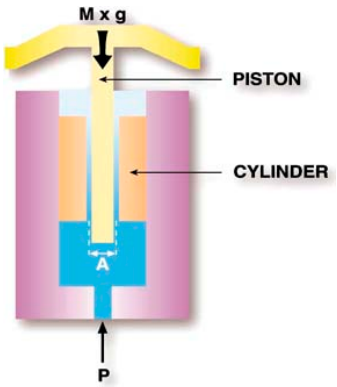

$$P = \frac{\sum_i M_i g_l \left(1 - \frac{\rho_a}{\rho_m}\right) + \pi D \tau}{A_{(T_r, P_r)} \left[1 + (\alpha_p + \alpha_c)(T - T_r)\right](1 + \lambda P)} - \rho_r g_l h$$

Figure 4. Piston gauge operating principle

원문: Fluke Calibration PG7601 메뉴얼(영문) · 제조사 원문 자료입니다. 사양은 제조사 사정에 따라 변경될 수 있습니다.

2.2.1 PLATFORM

The PG7601-AF platform is the instrument base into which the piston-cylinder modules are mounted and onto which the masses are loaded. The platform also includes the electronic measurement system.

The PG7601-AF platform rear panel provides the connection to the PG Terminal, remote communication connections and pressure connection ports.

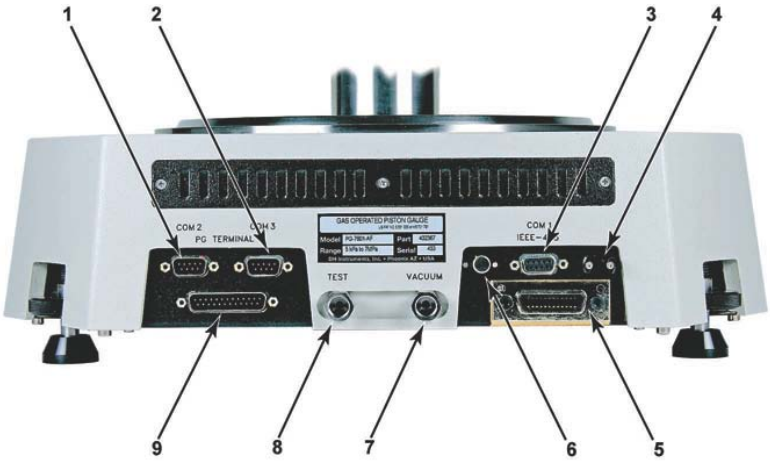

1. COM2 (RS232) for external barometer (optional), external vacuum gauge (optional), pass through communications
2. COM3 (RS232) – for PPC3-7M-AF pressure controller, AMH-38 automated mass handler (optional)
3. COM1 (RS232) - remote host communications
4. Ambient temperature sensor
5. IEEE-488 (GPIB) - remote host communications
6. Ambient relative humidity sensor
7. **VACUUM** port, for vacuum vent valve
8. **TEST** port, for connection to test system
9. PG Terminal port

Figure 5. Platform, PG7601-AF, rear view

© 2008 DH Instruments, a Fluke Company

원문: Fluke Calibration PG7601 메뉴얼(영문) · 제조사 원문 자료입니다. 사양은 제조사 사정에 따라 변경될 수 있습니다.

we measure, we calibrate, we validate.
KOLAS 국제공인교정기관 · ISO/IEC 17025

2.2.2 PG TERMINAL

The PG Terminal houses the PG platform power supplies and provides the local user interface for interaction with the PG7601-SYS-AF system.

The front panel assembly provides a 2 x 20 vacuum fluorescent display and a 4 x 4 membrane keypad for local user interface.

1. Vacuum fluorescent display
2. Keypad

Figure 6. PG Terminal front panel

The PG Terminal rear panel assembly provides the communications connection to the PG7601-AF platform and the power connection module.

1. Power switch
2. Fuse (25-pin)
3. Power receptacle
4. Connector for cable to PG7000 platform
5. Cooling fan

Figure 7. PG Terminal rear panel

원문: Fluke Calibration PG7601 메뉴얼(영문) · 제조사 원문 자료입니다. 사양은 제조사 사정에 따라 변경될 수 있습니다.

2.3 PISTON-CYLINDER MODULES (PC-7100/7600-10-L, -50, -200)

The piston-cylinder module is mounted in the PG7601-AF platform. The piston-cylinder precisely converts pressure to a proportional force (see Section 4.1.1). There are three piston-cylinder modules for three different pressure ranges.

Figure 8. Piston-cylinder modules, PC-7100/7600-10-L, -50, -200

© 2008 DH Instruments, a Fluke Company

원문: Fluke Calibration PG7601 메뉴얼(영문) · 제조사 원문 자료입니다. 사양은 제조사 사정에 따라 변경될 수 있습니다.

we measure, we calibrate, we validate.
KOLAS 국제공인교정기관 · ISO/IEC 17025

2.4 MASS SET (MS-7001-35-AF)

Combinations of masses from the 35 kg mass set are loaded onto in the piston-cylinder, as needed, to result in the set pressure desired.

The mass set is made up of (1) mass loading bell of 0.3 kg, (1) 4.5 kg makeup mass disc, (5) 5 kg mass discs, (2) 2 kg discs, (1) 1 kg disc, (1) 0.5 kg puck, (2) 0.2 kg puck, (1) 0.1 kg puck, 50 g to 0.01 g trim mass set in 1-2-2-1 progression.

Figure 9. Mass set, MS-7100-35-AF

2.5 PRESSURE CONTROLLER (PPC3-7M-AF)

The PPC3-7M-AF pressure controller is used to set and adjust pressure in the PG7601-SYS-AF system. Its operation can be fully automated to float the PG7601-AF's piston under control of the PG7601-AF platform's AutoGen function (see Section 4.1.2). It can also be used manually under direct operator control using its front panel direct pressure control keys.

The PPC3-7M-AF pressure controller is a component of the PG7601-SYS-AF system. It can also act as a stand alone component. For information on use of PPC3-7M-AF outside of the PG7601-SYS-AF system, see the PPC3 Operation and Maintenance Manual.

The pressure measurements made by the PPC3-7M-AF utility sensor are used only for pressure control and indication. They have no metrological function therefore they do not require traceable calibration. Adjustment of the PPC3 utility sensor is performed only for operational reasons (see Section 6.5).

원문: Fluke Calibration PG7601 메뉴얼(영문) · 제조사 원문 자료입니다. 사양은 제조사 사정에 따라 변경될 수 있습니다.

TS-TL-FLK-094

we measure, we calibrate, we validate.
KOLAS 국제공인교정기관 · ISO/IEC 17025

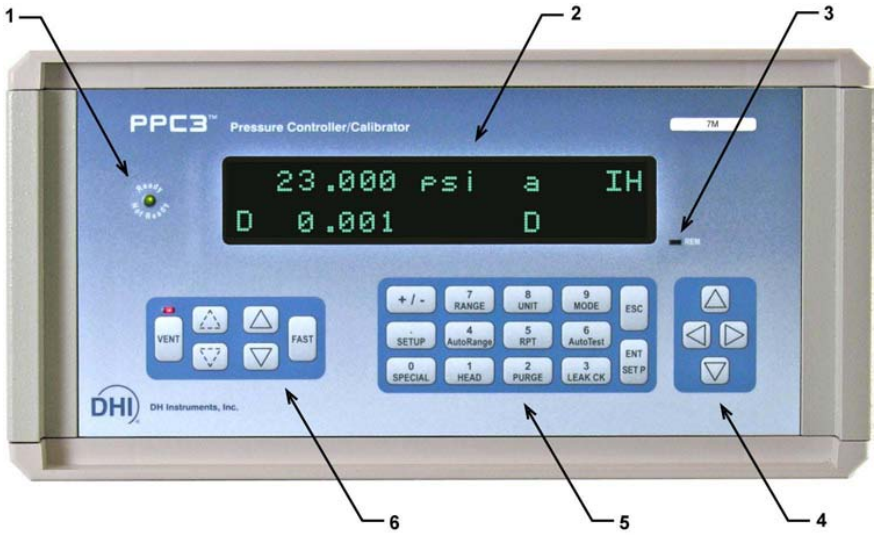

1. Ready/Not Ready indicator
2. Display
3. Remote activity indicator
4. Cursor control keys
5. Multi-function keypad
6. Direct pressure control keys

Figure 10. Pressure controller, PPC3-7M-AF, front panel

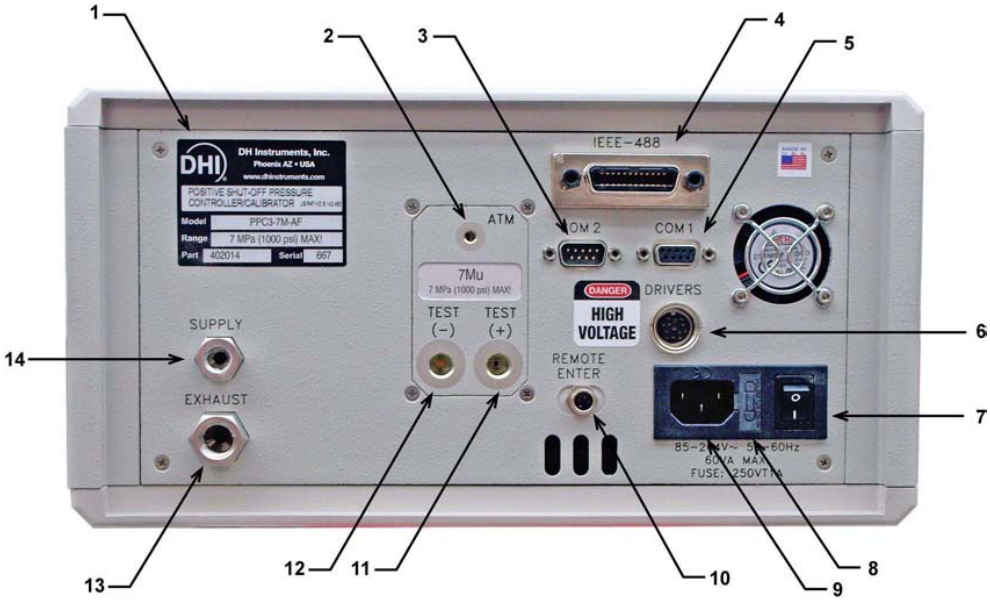

1. Label, product
2. **VENT** port
3. COM2 connector
4. IEEE-488 connector
5. COM1 connector (PG7601-AF communications)
6. Drivers (12 V) connector
7. Power switch
8. Fuse
9. Electrical power connector (IEC-320-C13)
10. Remote **[ENTER]** connector
11. Pressure connection, **TEST(+)**
12. Pressure connection, **TEST(-)**
13. Pressure connection, **EXHAUST**
14. Pressure connection, **SUPPLY**

Figure 11. Pressure controller, PPC3-7M-AF, rear panel

© 2008 DH Instruments, a Fluke Company

원문: Fluke Calibration PG7601 메뉴얼(영문) · 제조사 원문 자료입니다. 사양은 제조사 사정에 따라 변경될 수 있습니다.

2.6 REFERENCE VACUUM PUMP (D16B)

The reference vacuum pump is connected to the PG7601-AF platform reference vacuum port using the PK-7601-V-AF vacuum interconnections kit. It is used to establish a vacuum under the platform's vacuum bell jar when operating in absolute measurement mode against a vacuum.

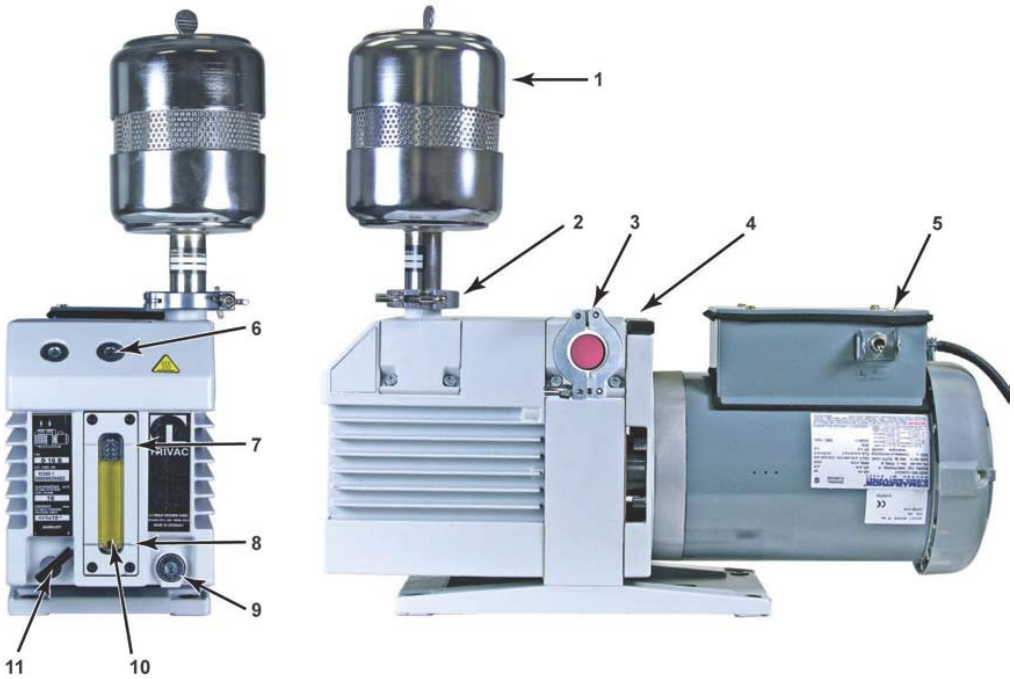

1. Smoke eliminator
2. Exhaust flange
3. Intake flange
4. Handle
5 Power switch
6. Oil fill plug
7. Maximum oil fill line
8. Minimum oil fill line
9. Oil drain plug
10. Oil level sight glass
11. Gas ballast valve

Figure 12. Reference vacuum pump, D16B, front and side views

원문: Fluke Calibration PG7601 메뉴얼(영문) · 제조사 원문 자료입니다. 사양은 제조사 사정에 따라 변경될 수 있습니다.

we measure, we calibrate, we validate.
㈜테솔 · www.tessol.com TS-TL-FLK-094 32 / 234
KOLAS 국제공인교정기관 · ISO/IEC 17025

3. INSTALLATION

3.1 UNPACKING AND INSPECTION

3.1.1 UNPACKING AND INSPECTION OF PG7601-BAS-AF BASE SYSTEM

The PG7601-BAS-AF is the PG7601-SYS-AF gas piston gauge base system. It includes the system operational components but not the piston-cylinder modules and mass sets which are in the PG7601-EXC-AF exchange pack.

Check that all items included in the PG7601-BAS-AF base system are present and have NO visible signs of damage.

Table 1 provides a parts list of the base system major components and how they are packed. Unpack and inspect the items following the instructions in Sections 3.1.1.1 to 3.1.1.6 and detailed packing lists in Table 2 to Table 5.

Table 1. Base system, PG7601-BAS-AF, packing guide

COMPONENT	SHIPPED IN	SECTION	DETAIL TABLE
PG7601-AF platform and Terminal	molded transit case	3.1.1.1	Table 2
PG7601-AF vacuum bell jar	corrugated container	3.1.1.1	Table 2
PPC3-7M-AF pressure controller	corrugated container	3.1.1.2	None
D16B reference vacuum pump	corrugated container	3.1.1.3	None
Vacuum pump smoke eliminator	corrugated container	3.1.1.3	None
PK-7601-P-AF pressure interconnections kit		3.1.1.4	Table 3
PK-7601-V-AF vacuum interconnections kit		3.1.1.5	Table 4
PG7601-BAS-AF documentation and accessories		3.1.1.6	Table 5

3.1.1.1 PLATFORM, TERMINAL AND BELL JAR (PG7601-AF)

The PG7601-AF platform is shipped in a molded transit case with the PG7601-AF Terminal and connecting cable. The vacuum bell jar is packed in a separate double corrugated container.

To unpack proceed as follows:

❶ Open the PG7601-AF shipping and storage case.

❷ Remove the PG Terminal and its cable from the upper packing insert.

❸ Remove the upper packing insert.

❹ Carefully lift the PG7601-AF platform from its position in the lower packing insert. Note the orientation so that the same orientation is used when PG7601-AF is repacked.

© 2008 DH Instruments, a Fluke Company

원문: Fluke Calibration PG7601 메뉴얼(영문) · 제조사 원문 자료입니다. 사양은 제조사 사정에 따라 변경될 수 있습니다.

TESSOL Technical Library

TS-TL-FLK-094

we measure, we calibrate, we validate.
㈜테솔 · www.tessol.com TS-TL-FLK-094 33 / 234
KOLAS 국제공인교정기관 · ISO/IEC 17025

❺ Reinstall the upper packing insert into the shipping and storage case and store in a safe place.

❻ Carefully unpack the vacuum bell jar from its double packed corrugated container. The bell jar is fragile. Set it aside where it is safe from damage.

Table 2. Platform, PG7601-AF, packing list

DESCRIPTION		PART NO.
1 ea.	PG7601-AF platform including:	402367
1 ea.	Bell jar and seal (in separate double corrugated container)	122106 (bell jar) 101546 (seal)
1 ea.	PG7601-AF Terminal	401284
1 ea.	Cable, DB25M x DB25F, PG Terminal to platform	102227
1 ea.	Molded transit case (in which the platform is shipped)	122576

3.1.1.2 PRESSURE CONTROLLER (PPC3-7M-AF)

The PPC3-7M-AF pressure controller P/N 402014 is delivered in a corrugated container with high density polyethylene inserts to hold it in place.

Remove the PPC3-7M-AF from the shipping container and remove it from its protective plastic bag. There are no other items packed with the PPC3-7M-AF.

Remove the protective caps from the pressure controller rear panel and the sheet of protective film from the front panel display. Install the rubber feet caps included the accessories if desired (see Section 3.1.1.6)

3.1.1.3 REFERENCE VACUUM PUMP (D16B)

The D16B vacuum pump P/N 402058 is delivered in a corrugated container, held in position by “foam in place”. The smoke eliminator for the vacuum pump is packed with the accessories and interconnections kit (see Section 3.1.1.6).

3.1.1.4 PRESSURE INTERCONNECTIONS KIT (PK-7601-P-AF)

The PK-7601-P-AF pressure interconnections kit is delivered in a corrugated container. Inventory all items following Table 3.

Table 3. Pressure interconnections kit, PK-7601-P-AF, packing list

DESCRIPTION		P/N 402364
1 ea	Valve assembly, platform shutoff (PG7601-AF TEST to PG7601-AF tee)	402361
1 ea.	Custom 1/4 in. ss tube, 76 cm (30 in.) (PPC3-7M-AF to PG7601-AF tee)	402362
1 ea.	Custom 1/4 in. ss tube, 53 cm (21 in.) (DUT connection to PG7601-AF tee)	402363
1 ea.	Tee, 1/4 in. Swage (DUT connection to PPC3-7M-AF to PG7601-AF TEST)	102939
1 ea.	Adaptor, 1/8 in. NPT M x 1/4 in. Swage	102033
1 ea.	Quick connector on stand (DUT connection)	401459
1 ea.	Quick connector stem, 1/4 in. NPT F	102117
1 ea.	Quick connector stem, 1/8 in. NPT F	102116
1 ea.	Quick connector stem, AN4 M	102115
1 ea.	Quick connector stem, 1/4 in. Swage	101977

원문: Fluke Calibration PG7601 메뉴얼(영문) · 제조사 원문 자료입니다. 사양은 제조사 사정에 따라 변경될 수 있습니다.

TS-TL-FLK-094

we measure, we calibrate, we validate.
KOLAS 국제공인교정기관 · ISO/IEC 17025
㈜테솔 · www.tessol.com TS-TL-FLK-094 34 / 234

3.1.1.5 VACUUM INTERCONNECTIONS KIT (PK-7601-V-AF)

The PK-7601-V-AF vacuum interconnections kit is delivered in a corrugated container. Inventory all items following Table 4.

Table 4. Vacuum interconnections kit, PK-7601-V-AF, packing list

DESCRIPTION		P/N 402365
1 ea.	Valve, vacuum shutoff, KF25	102763
1 ea.	Elbow, KF25	103736
1 ea.	Vacuum hose, KF25, 48 in.	103737
2 ea.	Clamp, KF25	102121
2 ea.	Centering ring, KF25	101542

3.1.1.6 DOCUMENTATION AND ACCESSORIES

The PK-7601-BAS-AF accessories are delivered in a corrugated container. Inventory all items following Table 5.

Table 5. Base system accessories kit packing list

DESCRIPTION		P/N 402366
2 ea.	Power cord, 7.5 ft.	100770
1 ea.	Cable, null modem	402114
1 ea.	Cable, RS232, 9 pin, 2m (PG7601-AF to PPC3-7M-AF)	100847
2 ea.	O-ring, Buna 2-242 (PG7601-AF drive belts)	101976
1 ea.	Dust cover, 7601 Type	102132
1 ea.	Gloves, pair	101398
1 ea.	Krytox® GPL205/6 .5 oz.	102496
1 ea.	Allen wrench, 2.5 mm	102257
1 ea.	Allen wrench, 3 mm	102168
1 ea.	Allen wrench, 5 mm	102262
1 ea.	Piston insertion tool (10 kPa/kg)	402371
1 ea.	Spanner wrench (piston-cylinder)	122568
1 ea.	Mounting post PRT insertion plug	402389
1 ea.	Valve assembly, vacuum relief, PG7601-AF platform with instruction sheet	401050
1 set	(6) Rubber feet caps (PPC3-7M-AF pressure controller)	400203
1 set	Documentation PG7601-AF Technical Data PG7601-AF platform Calibration Report PG7601-SYS-AF Operation and Maintenance Manual PPC3-7M-AF Test Report PG7601-SYS-AF Support Disc	 550101 550100 550152 550161 402275

3.1.2 UNPACKING AND INSPECTION OF PG7601-EXC-AF EXCHANGE PACKAGE

The PG7601-EXC-AF is the PG7601-SYS-AF gas piston gauge system's metrological elements. It includes the piston-cylinder modules and mass set.

Check that all items included in the PG7601-EXC-AF exchange package are present and have NO visible signs of damage.

© 2008 DH Instruments, a Fluke Company

원문: Fluke Calibration PG7601 메뉴얼(영문) · 제조사 원문 자료입니다. 사양은 제조사 사정에 따라 변경될 수 있습니다.

TS-TL-FLK-094

we measure, we calibrate, we validate.
KOLAS 국제공인교정기관 · ISO/IEC 17025
㈜테솔 · www.tessol.com TS-TL-FLK-094 35 / 234

Table 6 provides a parts list of the exchange package major components and how they are packed. Unpack and inspect the items following the instructions in Sections 3.1.2.1 to 3.1.2.3 and detailed packing lists in Table 7 to Table 9.

Table 6. Exchange pack, PG7601-EXC-AF, packing guide

COMPONENT	SHIPPED IN	SECTION	DETAIL TABLE
PC-7100/7600-10-L, -50 and -200 piston-cylinder modules and accessories	(3) bullet cases inside a single molded transit case	3.1.2.1	Table 7
MS-7001-35-AF mass set	(2) molded transit cases	3.1.2.2	Table 8
PG7601-EXC-AF documentation and accessories	Corrugated container	3.1.2.3	Table 9

3.1.2.1 PISTON-CYLINDER MODULES (PC-7100/7600-10-L, PC-7100/7600-50, PC-7100/7600-200) AND ACCESSORIES

The piston-cylinder modules are shipped in PVC bullet cases that are packed in a reusable transit case with foam inserts. The piston-cylinder module accessories are packed in a recess in the transit case.

Open the transit case and remove the piston-cylinder module bullet cases and accessories.

The bullet cases screw open by turning the lid counterclockwise.

Table 7. Piston-cylinder modules, PC-7100/7600-10-L, PC-7100/7600-50, PC-7100/7600-200, packing list

DESCRIPTION		P/N
1 ea.	PC-7100/7600-10-L piston-cylinder module in bullet case	402184
1 ea.	PC-7100/7600-50 piston-cylinder module in bullet case	401563
1 ea	PC-7100/7600-200 piston-cylinder module in bullet case	401564
3 ea.	Piston-cylinder module bullet case	401642
1 ea.	Molded transit case for three piston –cylinder modules	402368
1 ea.	O-ring, Viton, brown, 2-122	101918
2 ea.	O-ring, Vitron, brown, 2-120	101921
3 ea.	O-ring, Viton, brown, 2-130	102380

3.1.2.2 MASS SET (MS-7001-35-AF)

The stability over time of PG7601-AF pressure measurements is a function of the stability of the masses loaded on the piston. Precautions should be taken in handling the masses to minimize influences that may change their mass. This includes always wearing protective gloves when handling the masses to avoid contaminating them with body oils and perspiration. Protective gloves are provided in the mass set accessory kit.

The PG7601-AF mass set is shipped in (2) molded transit cases. The masses should be removed from their shipping cases and inventoried when actually setting up the PG7601-AF system.

To unpack: Carefully remove each mass from the transit case. Do not remove masses from their plastic bags until ready to install them (see Section 3.3.4).

원문: Fluke Calibration PG7601 메뉴얼(영문) · 제조사 원문 자료입니다. 사양은 제조사 사정에 따라 변경될 수 있습니다.

Table 8 details the the MS-7001-35-AF mass set.

Table 8. Mass set, MS-7001-35-AF, packing list

DESCRIPTION		P/N 402259
1 ea.	4.5 kg make up mass disk	123334
5 ea.	5 kg mass disk	123213
2 ea	2 kg mass disk	121922
1 ea.	1 kg mass disc	121936
1 ea.	0.5 kg mass puck	123500
2 ea.	0.2 kg mass puck	123498
1 ea.	0.1 kg mass puck	123496
1 ea.	0.3 kg mass loading bell	402135
1 ea.	Trim mass set (50 to 0.01 g) in case	402403
1 ea.	Main mass molded transit case with inserts	123057
1 ea.	Fractional mass modled transit case with inserts	122577

3.1.2.3 DOCUMENTATION AND ACCESSORIES

The PG7601-EXC-AF exchange pack accessories and documentation are shipped in a separate corrugated container. Open the corrugated container and inspect and inventory the contents.

Table 9 details the PG7601-EXC-AF exchange pack accessories and documentation.

Table 9. Exchange pack accessories packing list

DESCRIPTION		P/N (PART OF 402259)
1 ea.	Fractional mass tray	123051
1 ea.	Main mass spindle	123536
1 ea.	Fractional mass tray dust cover	102814
1 ea.	Main mass stack dust cover	102847
1 ea.	Gloves, pair	101398
4 ea.	Calibration report (mass set and (3) piston-cylinder modules)	550100
4 ea.	Metrology Support Disk	550300

3.2 SITE REQUIREMENTS

See Section 2.1, Figure 1 for an illustration of the PG7601-SYS-AF standard installation.

When selecting and preparing a site to set up the PG7601-SYS-AF system, the following should be considered:

- **Ambient conditions:** To achieve optimum metrological performance, ambient conditions should be controlled and maintained within the following:
  - ***Temperature:*** 19 to 23 °C, minimize rate of change of temperature.
  - ***Relative Humidity:*** 10 to 60 %RH (non-condensing).
  - ***Ambient Pressure:*** Minimize external influences that will cause barometric instability.

© 2008 DH Instruments, a Fluke Company

원문: Fluke Calibration PG7601 메뉴얼(영문) · 제조사 원문 자료입니다. 사양은 제조사 사정에 따라 변경될 수 있습니다.

TS-TL-FLK-094

we measure, we calibrate, we validate. ㈜테솔 · www.tessol.com TS-TL-FLK-094 37 / 234

KOLAS 국제공인교정기관 · ISO/IEC 17025

- ***Air Currents:*** Do not install the PG7601-AF platform under a source of vertical air currents such as an overhead air conditioning duct. These can blow on the mass load and add unquantified forces.
- ***Vibration:*** Minimize local vibration. Excessive vibration will reduce the stability of the pressures defined by PG7601-AF (vibration affects the floating piston). Excessive high frequency vibration, for example from a vacuum pump on the same table as the PG7601-AF, may affect piston sensitivity.

- **Bench space:** The recommended standard setup for the PG7601-SYS-AF system requires a bench space of at least 165 cm x 56 cm (65 in. x 22 in.) (see Section 2.1, Figure 1).
- **Bench stability:** Up to 36 kg (79 lb) may be loaded and unloaded onto the PG7601-AF platform. The bench on which the PG7601-AF sits should not deflect significantly under the mass load changes. This can be verified by setting the platform on the bench, leveling it using its bubble level, and loading and unloading the complete mass set while observing whether the level setting changes.
- **Location of other components:** Plan the space required and a convenient layout for the complete PG7601-SYS-AF system including the PG Terminal, mass set, pressure controller, reference vacuum connection and pump location and test instrument connection. There is a recommended standard setup for the system (see Section 2.1, Figure 1). This setup may be used or the setup may be customized.

  If customizing the physical set up of the PG7601-SYS-AF system, follow these recommendation:

  - The pressure connection between the test connection (to DUT) and the PG7601-AF platform should be direct, with no components in between. The pressure controller should NOT be connected between the PG7601-AF platform and the test connection.
  - Minimize tubing lengths between the components.
  - Do no use fittings, adaptors or components that will restrict flow in the system more than the components provided with the PK-7601-P-AF interconnections kit.
  - Avoid low points or potential liquid traps between the PG7601-AF platform and the DUT connection.
  - Be sure the surface on which the PG7601-AF platform is installed is isolated from the D16B vacuum pump vibration.
  - Consider drilling a 4 in. hole in the bench to run the KF25 vacuum connection straight down through the bench to the vacuum pump.
- **Electrical supply:** Plan the supply of electrical power to the PG Terminal and to the pressure controller.
- **Test gas supply:** Plan the supply of test gas to the pressure controller. The test gas supply must be clean and dry (instrument grade minimum, high purity preferred) to avoid contaminating the piston-cylinder gap (see Section 3.3.7).
- **Control vacuum supply:** Plan the supply of control vacuum to the pressure control. The control vacuum supply must be separate from the reference vacuum supply (see Section 3.3.8).
- **Reference vacuum supply:** Plan for the vacuum connection to the platform and the location of the reference vacuum pump. There is a recommended standard setup for the system (see Section 2.1, Figure 1). This setup may be used or the setup may be customized.
- **Bell jar placement:** Plan a location for the bell jar when it is removed from the platform to load and unload masses or when operating in gauge mode. The bell jar may be placed on top of the pressure controller.

원문: Fluke Calibration PG7601 메뉴얼(영문) · 제조사 원문 자료입니다. 사양은 제조사 사정에 따라 변경될 수 있습니다.

3.3 PHYSICAL SETUP

Before setting up the PG7601-AF system, see Section 2.1, Figure 1 for an illustration of the PG7601-SYS-AF standard installation and Section 3.2 for information on site requirements.

To set up the PG7601-SYS-AF components for operation proceed as follows in the specified order:

❶ Set up the PG7601-AF platform (see Section 3.3.1).

❷ Set up the PPC3-7M-AF pressure controller (see Section 3.3.2).

❸ Make the system pressure interconnections (see Section 3.3.3).

❹ Set up the MS-7001-35-AF mass set (see Section 3.3.4)

❺ Install a piston-cylinder module into the platform (see Section 3.3.5).

❻ Set up the D16B vacuum pump and make the system vacuum interconnections (see Section 3.3.6).

❼ Connect test gas supply (see Section 3.3.7).

❽ Connect control vacuum supply (see Section 3.3.8).

3.3.1 SETTING UP THE PLATFORM

Before setting up the PG7601-AF system, see Section 2.1, Figure 1 for an illustration of the PG7601-SYS-AF standard installation and Section 3.2 for information on site requirements.

To set up the PG7601-AF platform proceed as follows:

❶ Place the PG7601-AF platform on the site table in the desired orientation and location (see Section 2.1, Figure 1). Though the rear panel is usually in the back, any orientation can be used.

❷ Place the PG7601-AF Terminal at the desired location.

❸ Connect the PG7601-AF Terminal to the PG7601-AF platform using the 25 pin cable supplied.

❹ Connect electrical power (85 to 264 VAC, 50/60 Hz) to the PG7601-AF Terminal using the power cable supplied. Any grounded power cable with a standard IEC320-313 connection may be used.

❺ Install the vacuum vent valve on the vacuum vent port on the rear of the PG7601-AF platform. Refer to the instruction sheet provided with the vent valve assembly.

❻ Level the platform using the PG7601-AF platform's two front leveling feet and the bubble level mounted on the front of the platform.

© 2008 DH Instruments, a Fluke Company

원문: Fluke Calibration PG7601 메뉴얼(영문) · 제조사 원문 자료입니다. 사양은 제조사 사정에 따라 변경될 수 있습니다.

TS-TL-FLK-094

we measure, we calibrate, we validate.
KOLAS 국제공인교정기관 · ISO/IEC 17025
㈜테솔 · www.tessol.com TS-TL-FLK-094 39 / 234

3.3.2 SETTING UP THE PRESSURE CONTROLLER

Refer to Section 2.1, Figure 1 for an illustration of the PG7601-SYS-AF standard installation and Section 3.2 for information on site requirements.

To set up the PPC3-7M-AF pressure controller proceed as follows:

❶ Install the rubber feet caps on the PPC3-7M-AF if desired.

❷ Place the pressure controller at the desired location.

❸ Connect electrical power (85 to 264 VAC, 50/60 Hz) to the pressure controller using the power cable supplied. Any grounded power cable with a standard IEC320-313 connection may be used.

❹ Connect and secure the 9 pin, RS232 cable supplied between the PPC3-7M-AF COM1 port and the PG7601-AF platform COM3 port.

3.3.3 SYSTEM PRESSURE INTERCONNECTIONS

This section assumes that the PG7601-AF system will be setup using the PK-7601-P-AF interconnections kit following the standard installation described in Section 2.1, Figure 1. Custom installations are also possible. Before considering a customer installation, see Section 3.2 for setup cautions and recommendations.

Use the PK-7601-P-AF interconnection kit (see Section 3.1.1.4) to interconnect the PG7601-SYS-AF system components as follows. Refer to Section 2.1, Figure 1.

❶ Install the platform shutoff valve assembly onto the PG7601-AF **TEST** port. Use the gland and collar that are delivered installed in the **TEST** port. Set aside the orange plug and install the gland and collar onto the DH200M end of the assembly. Be sure the collar is fully threaded (left hand thread). Then install the assembly into the **TEST** port by tightening the gland.

❷ Install the 1/4 in. Swage tee onto the platform shutoff valve assembly. Finger tighten only.

❸ Install the 1/8 in. NPT M x 1/4 in. Swage adaptor into the **TEST(+)** port of the PPC3-7M-AF. Use Teflon® tape or other thread sealer on the 1/8 in. NPT M threads.

❹ Connect the “PPC3-7M-AF to tee” 1/4 in. stainless steel tube to the Swage tee. Finger tighten only.

❺ Connect the “PPC3-7M-AF to tee” 1/4 in. stainless steel tube to the adaptor on the PPC3-7M-AF **TEST(+)** port. Tighten firmly.

❻ Connect the “DUT quick connector on stand to tee” 1/4 in. stainless steel tube to the DUT quick connector. Tighten firmly.

❼ Connect the “DUT quick connector on stand to tee” 1/4 in. stainless steel tube to the Swage tee.

Tighten all three nuts on the Swage tee firmly.

❽ Secure DUT quick connector stand to bench top if desired (screws not provided).

원문: Fluke Calibration PG7601 메뉴얼(영문) · 제조사 원문 자료입니다. 사양은 제조사 사정에 따라 변경될 수 있습니다.

3.3.4 SETTING UP THE MASS SET

Place the mass loading tray and mass spindle (provided with the mass set accessories) at the desired location (see Section 2.1, Figure 1). Then follow the steps below:

The stability over time of PG7601-AF pressure measurements is a function of the stability of the masses loaded on the piston. Precautions should be taken in handling the masses to minimize influences that may change their mass. This includes always wearing protective gloves when handling the masses to avoid contaminating them with body oils and perspiration. Protective gloves are provided with the mass set accessories.

It is VERY IMPORTANT that the individual masses be installed on the mass loading tray in proper sequence. This will ensure that PG7601-AF mass loading instructions are executed properly (carefully follow the instructions provided in this Section).

To install the masses on the mass loading tray, proceed as follows:

❶ PG7601-AF masses are shipped in reusable, molded shipping and storage cases. One of the cases contains a 4.5 kg mass and the masses of 2 kg and under. The other case contains the main masses of 5 kg each. Each mass is packed in a sealed plastic bag and then placed in a protective shipping insert.

If the masses have not yet been inventoried, open the shipping cases and identify the masses (see Section 3.1.2.2). Remove each mass from its plastic bag as you install it on the spindle or tray.

❷ **Install the *main* masses:** The *main* masses are a series of 5 kg masses numbered **1** to **5**. Pile the *main* masses onto the main mass spindle. Put mass number **5** at the bottom of the stack. Then pile in descending order: **5**, **4**, **3**, **2**, **1**, bottom to top. Be careful NOT to confuse the 4.5 kg *makeup* mass with a 5 kg mass (refer to next step with *main* mass **1**).

❸ **Install the *make up* mass:** The *make up* mass is a single 4.5 kg mass numbered **1**. It has the same diameter as the *main* masses.

The *make up* mass is installed vertically in the corresponding slot on the mass loading tray.

❹ **Install the *fractional* masses:** The *fractional* masses are all the masses of 2 kg and under. *Fractional* masses of 2 and 1 kg are discs with a central hole. *Fractional* masses of 100 to 500 g are solid, small diameter pucks. *Fractional* masses of 50 g and under are trim masses packed and stored in their own separate case.

Fractional mass discs and pucks are installed vertically in the corresponding slots in the mass loading tray. Note that there are (2) 2 kg masses numbered **1** and **2**. When used, these are always loaded first **1**, then **2**.

❺ The trim mass case can be placed near the mass tray as desired.

❻ Install the mass set dust covers (included in mass set accessories) if desired.

© 2008 DH Instruments, a Fluke Company

원문: Fluke Calibration PG7601 메뉴얼(영문) · 제조사 원문 자료입니다. 사양은 제조사 사정에 따라 변경될 수 있습니다.

TS-TL-FLK-094

we measure, we calibrate, we validate.
KOLAS 국제공인교정기관 · ISO/IEC 17025

3.3.5 INSTALLING A PISTON-CYLINDER MODULE INTO THE PLATFORM

To operate the PG7601-AF system, a piston-cylinder module must be installed in the platform's mounting post. To install a piston-cylinder module in the PG7601-AF platform, proceed as follows:

❶ **Remove the PG7601-AF platform mounting post plug.** Unscrew the ORANGE plastic mounting post plug that is installed in the platform mounting post. Rotate counterclockwise to remove.

❷ **Remove the piston-cylinder module from its bullet case.** Select a piston-cylinder module. Open the piston-cylinder module bullet case by rotating its lid counterclockwise. Remove the piston-cylinder module from the bullet case base by unthreading it from the case. Hold the piston-cylinder module body by the knurled area and rotate it counterclockwise.

❸ **Place the piston-cylinder module in the PG7601-AF platform mounting post.** Place the piston-cylinder module (thread down) into the platform mounting post (see Figure 13 below).

❹ **Screw the piston-cylinder module into the PG7601-AF platform mounting post.** Rotate the piston-cylinder module clockwise until all threads are engaged and there is NO gap between the piston-cylinder module and the mounting post. Slight resistance will be encountered in the second half of travel as the piston-cylinder module O-rings seat in the mounting post.

❺ **Make the installed piston-cylinder active in the PG7601-AF platform.** Use **[P-C]** to select the piston-cylinder that was installed in the steps above (see Section 4.3.2). If no piston-cylinder module digital ID has yet been created in PG7601-AF platform memory, it is not possible to select one and **[P-C]** results in an error message. In this case, see Section 4.5.1.1 to create or install a piston-cylinder digital ID.

To remove a piston-cylinder module from the platform, simply unthread it (counter clockwise) from the mounting post and return it to its bullet case.

Figure 13. Piston-cylinder module installation

⚠ *Low torque manual rotation is all that should be required to fully seat the piston-cylinder module into the PG7601-AF mounting post. Never force the piston-cylinder module into the mounting post.*

원문: Fluke Calibration PG7601 메뉴얼(영문) · 제조사 원문 자료입니다. 사양은 제조사 사정에 따라 변경될 수 있습니다.

we measure, we calibrate, we validate.
KOLAS 국제공인교정기관 · ISO/IEC 17025

3.3.6 SETTING UP THE REFERENCE VACUUM PUMP AND VACUUM INTERCONNECTIONS

Refer to Section 2.1, Figure 1 for an illustration of the PG7601-SYS-AF standard installation and identification of components. See Section 2.6 for detail on the D16B vacuum pump. See Section 3.2 for information on site requirements.

To set up the D16B reference vacuum pump and connect it to the PG7601-AF platform proceed as follows:

❶ **Install the smoke eliminator on the D16B vacuum pump.** Orient the D16B vacuum pump exhaust connection vertically. Remove the four capscrews, rotate the exhaust flange and reinstall the cap screws.

Remove the KF25 clamp, centering ring and rubber cover from the exhaust connection. Use the clamp and centering ring to install the smoke eliminator (the smoke eliminator is delivered with the PG7601-BAS-AF accessories).

❷ **Place the D16B vacuum pump in the desired location.** The vacuum pump needs to able to be reached by the 48 in. KF25 vacuum hose provided in the vacuum interconnections. The pump should not be installed on the same surface as the PG7601-AF platform to avoid vibration of the operating pump affecting the platform.

Connect the pump's electrical cord to a power supply (85 to 264 VAC, 50/60 Hz). Note that pump has 1430 VA max. consumption that peaks on start up. A dedicated, "industrial rated" (slow blow) breaker may be needed to avoid an overload at start up.

❸ **Connect the vacuum shutoff valve to the PG7601-AF platform.** Remove the KF25 vacuum clamp, centering ring and plug from the PG7601-AF platform's KF25 vacuum connection. Use the KF25 clamp and centering ring to install the valve onto the platform's vacuum port. Orient the valve so that it can be operated conveniently.

❹ **Connect the vacuum elbow to the vacuum shutoff valve.** Use a KF25 clamp and centering ring to connect the 90° KF25 elbow to the vacuum shutoff valve installed in step **❸.** Orient the elbow so that it can be connected to the 48 in. vacuum hose that connects to the vacuum pump.

❺ **Connect the 48 in. vacuum hose between the elbow and the vacuum pump.** Use a KF25 clamp and centering ring to connect the 48 in. vacuum hose to the 90° KF25 elbow that was installed in step ❹.

Remove the vacuum clamp, centering ring and plastic cover from the DB16B vacuum pump inlet port. Leave the protective screen in place. Use the clamp and centering ring to attach the 48 in. vacuum hose to the vacuum pump.

3.3.7 CONNECTING TEST GAS SUPPLY

Using a pressure connecting hose or tube of appropriate pressure rating, connect the pressure supply to the **SUPPLY** port on the rear panel of PPC3-7M-AF. The PPC3 **SUPPLY** port connection is **1/8 in. NPT female**.

The PPC3 SUPPLY port is aluminum. When installing the 1/8 in. NPT M adaptor (not included), take care not to cross thread it and damage the port threads.

The supply pressure should be equal to the maximum PPC3-7M-AF control pressure + 10 %. This is normally 7.7 MPa (1100 psi). A lower gas pressure supply can be used but should exceed the maximum desired test output pressure by 10 to 20 %. The supplied gas must be

© 2008 DH Instruments, a Fluke Company

원문: Fluke Calibration PG7601 메뉴얼(영문) · 제조사 원문 자료입니다. 사양은 제조사 사정에 따라 변경될 수 있습니다.

we measure, we calibrate, we validate.
KOLAS 국제공인교정기관 · ISO/IEC 17025

clean, dry (instrument grade) nitrogen, air or helium. Using an unclean or moist gas supply will increase piston-cylinder cleaning frequency.

Never connect a pressure supply greater than 8.4 MPa (1200 psi). Be sure to connect the pressure supply to the SUPPLY port. Connecting to another port is likely to damage PPC3-7M-AF.

3.3.8 CONNECTING CONTROL VACUUM SUPPLY

For the PPC3-7M-AF to set pressure under atmosphere and/or to reliably set pressure under 20 kPa (3 psi) gauge (other than zero gauge), a vacuum supply must be connected to the **EXHAUST** port.

The control vacuum supply is not included in the PG7601-AF system. For full PG7601-AF system operation, the control vacuum must be provided by a vacuum source with an ultimate pressure lower than 2 kPa (0.3 psia) and flow of at least 85 slm (3 cfm). The control vacuum supply should be separate from the PG7601-AF reference vacuum supply. Do not tee off the D16B reference vacuum pump to supply vacuum to the PPC3-7M-AF **EXHAUST** port. The flow through the **EXHAUST** port will have an adverse effect on the reference vacuum.

Using a vacuum hose or tube, connect the pressure supply to the **EXHAUST** port on the rear panel of PPC3-7M-AF. The PPC3 **EXHAUST** port connection is **1/4 in. NPT female**.

Never connect a pressure supply to or plug the PPC3-7M-AF EXHAUST port.

To avoid building up pressure on the EXHAUST port or on a vacuum pump connected to the EXHAUST port, the vacuum source should either be continuously ON or the EXHAUST port should be bypassed to atmosphere when the vacuum source is OFF. This is because when a supply pressure is applied to the PPC3-7M-AF SUPPLY port and the PPC3 is NOT in the vent ON condition, there may be a constant gas exhaust through the PPC3 EXHAUST port.

3.4 POWER UP AND VERIFICATION

This section assumes that the physical setup of the PG7601-SYS-AF system has been completed (see Section 3.3).

3.4.1 POWER UP PLATFORM AND PRESSURE CONTROLLER

Turn the PG7601-AF power ON by pressing the power ON/OFF switch on the rear panel of the PG Terminal. Observe the PG terminal display as the terminal connects with the PG7601-AF platform, initializes, error checks and goes to the MAIN run screen (see Section 4.2.1.2).

If **<….Searching…..>** displays for more than 10 seconds, communication between the platform and the PG Terminal is failing. Check that the platform to PG Terminal cable is properly installed.

Turn the PPC3-7M-AF power ON by pressing the power ON/OFF switch on its rear panel. Observe the front panel display as PPC3-7M-AF initializes, error checks and goes to the MAIN run screen (see Section 4.2.1.2).

If either product fails to reach the MAIN run screen, service may be required. Record the sequence of operations and displays observed and contact a DHI Authorized Service Provider.

원문: Fluke Calibration PG7601 메뉴얼(영문) · 제조사 원문 자료입니다. 사양은 제조사 사정에 따라 변경될 수 있습니다.

we measure, we calibrate, we validate.
KOLAS 국제공인교정기관 · ISO/IEC 17025

3.4.2 CHECK THAT ON-BOARD PISTON-CYLINDER MODULE AND MASS SET DIGITAL IDs ARE CORRECT

PG7601-AF uses stored piston-cylinder and mass set metrological information to calculate the reference pressures it defines (see Section 4.1.1). This information is stored in digital identification records (digital IDs) (see Section 4.5.1). For the pressure values to be correct, the stored metrological information of the piston-cylinder, mass set and mass loading bell must be correct. Before using the PG7601-AF system, the validity of the stored information should be verified. Verification consists of comparing the piston-cylinder, mass set and mass loading bell information stored in the PG7601-AF platform to the information in the current piston-cylinder, mass set and mass loading bell calibration reports.

To verify the PG7601-AF piston-cylinder, mass set and mass loading bell information, use the piston-cylinder and mass set viewing capabilities accessed by pressing **[SPECIAL]**, **<1PC/MS>** (see Section 4.5.1). Compare all the information contained in the PG7601-AF piston-cylinder, mass set and mass loading bell digital IDs to the information on the piston-cylinder, mass set and mass loading bell calibration reports delivered with the system.

If piston-cylinder or mass set information is incorrect or missing, it can be entered manually (see Section 4.5.1) or loaded remotely from a personal computer using the digital ID (*.did) files supplied on the element's Metrology Support Disk (see Section 7.4).

3.4.3 SET LOCAL GRAVITY VALUE

PG7601-AF uses the value of local acceleration due to gravity (gl) in its calculation of the reference pressure it defines (see Section 4.1.1). The correct value of local acceleration due to gravity at the site of use must be entered. This is accomplished by pressing **[SPECIAL]**, **<6gl>** (see Section 4.5.6) and editing the value of local gravity. To access and edit the value of **<6gl>** it is first necessary for the PG7601-AF platform security level to be set to **<none>** using **[SPECIAL]**, **<4prefs>**, **<5level>**, **<1set user level>** (see Section 4.5.4.5). After changing the user level **<none>** to access **<6gl>**, be sure to set it the user level back to **<low>**.

3.4.4 CHECK/SET SECURITY LEVEL

PG7601-AF has a security system based on user levels. By default, the security system is set to "low", which includes certain access restrictions, and there is no password required to change the security level. See Section 4.5.4.5 for information on the security level system. As part of the system startup, determine the security level that is appropriate and set a password if desired.

The PG7601-AF platform is delivered with the security level set to low to avoid inadvertent altering of critical internal settings but with access to changing security levels unrestricted. It is recommended that the low security level be maintained at all times and password protection be implemented if control over setting of security levels is desired.

3.4.5 CHECK PROPER OPERATION OF AMBIENT CONDITION MEASUREMENTS

PG7601-AF automatically measures ambient conditions and uses the values in its pressure calculations.

To verify that the ambient condition measurements are operating properly, proceed as follows:

- **Display current ambient condition readings:** Press **[AMBIENT]** on the PG7601-AF Terminal. The ambient conditions run screen is displayed (see Section 4.3.6).

© 2008 DH Instruments, a Fluke Company

원문: Fluke Calibration PG7601 메뉴얼(영문) · 제조사 원문 자료입니다. 사양은 제조사 사정에 따라 변경될 수 있습니다.

we measure, we calibrate, we validate.
㈜테솔 · www.tessol.com TS-TL-FLK-094 45 / 234
KOLAS 국제공인교정기관 · ISO/IEC 17025

TS-TL-FLK-094

- **Verify proper ambient condition readings:** Compare the ambient condition values displayed to the actual values of ambient conditions. Refer to the ambient condition measurement specifications when evaluating the ambient readings (see Section 1.1.2.2).

The unit of measure in which ambient pressure is displayed is the same as the unit selected by pressing [UNIT] (see Section 4.3.3). Units of measure in which other ambient condition values are expressed cannot be changed.

PG7601-AF allows the source of ambient condition values used in reference pressure calculations to be specified. The source may be PG7601-AF's on-board measurements, default values or operator entered values. See Section 4.4 for information on specifying the source of ambient condition values used by PG7601-AF in reference pressure calculations.

3.4.6 TURN ON AUTOGEN AND AUTOROTATE

In most cases, PG7601-AF is operated with the AutoRotate and AutoGen functions ON so that the piston is automatically rotated when necessary and the pressure is automatically adjusted to float the piston.

Press **[ROTATE]**, **<1on>** (see Section 4.3.8).

Press **[GEN]**, **<1on>** (see Section 4.3.9). The PG7601-AF must establish communication with the PPC3-7M-AF for the AutoGen function to complete initialization and be ON. If initialization completes, **<Turning ON automated generation>** is displayed momentarily, automated control is turned ON and the display returns to the MAIN run screen. If communication cannot be established **<P control timeout, autogen off>** is displayed momentarily (see Section 4.3.9). When the PG7601-AF initializes the PPC3-7M-AF pressure controller, it automatically makes the necessary settings for it to operate in the system (pressure unit, measurement mode, control mode, hold limit, etc.).

3.4.7 APPLY SUPPLY PRESSURE

If the supply pressure was not applied to the PPC3-7M-AF during setup (see Section 3.3.7), apply the regulated supply pressure to the **SUPPLY** port.

3.4.8 APPLY CONTROL VACUUM

If the supply vacuum was not applied to the PPC3-7M-AF during setup (see Section 3.3.8), apply the control vacuum to the **EXHAUST** port.

3.4.9 APPLY REFERENCE VACUUM

The D16B reference vacuum pump was installed and connected during the system setup (see Section 3.3.6).

Check that the vacuum shutoff valve on the PG7601-AF platform is closed. The knob should be rotated clockwise until it stops.

With the vacuum shutoff valve closed, turn ON the vacuum pump using its power switch.

3.4.10 SET A GAUGE MODE PRESSURE, CHECK AUTOGEN AND AUTOROTATE FUNCTIONS

This section assumes that the PG7601-AF system has already been set up, including pressure interconnection (see Section 3.3).

원문: Fluke Calibration PG7601 메뉴얼(영문) · 제조사 원문 자료입니다. 사양은 제조사 사정에 따라 변경될 수 있습니다.

TS-TL-FLK-094

we measure, we calibrate, we validate.
KOLAS 국제공인교정기관 · ISO/IEC 17025

Before applying pressure to the PG7601-AF system, be sure that all pressure vessels and connections connected to it are rated for the pressure levels that will be applied and that all connections have been properly tightened.

Check automated pressure generation and piston rotation while setting a gauge pressure. Proceed as follows:

❶ Level the PG7601-AF platform using it's bubble level and leveling feet.

Use **[MODE]** on the PG Terminal to set gauge measurement mode (see Section 4.3.4).

Use **[P-C]** to check that the piston-cylinder selected is the one that is actually mounted in the PG7601-AF platform (see Section 4.3.2).

Be sure that the platform shutoff valve on the PG7601-AF **TEST** port is open (The knob should be rotated counter clockwise until it stops).

❷ Press **[P OR M]**, **<1pressure>** to select *pressure entry mode* (see Section 4.3.12).
Press **[RES]** and adjust mass loading resolution to 0.1 kg (see Section 4.3.10)
Press **[ENTER/SET P]** and enter a pressure value to be generated.
Follow the mass loading instruction (see Section 4.1.5) and press **[ENTER]**.

❸ The PG Terminal display returns to the MAIN run screen (see Section 4.2.1.2). The PPC3-7M-AF pressure controller increases pressure and floats the piston. Piston position is indicated in the bottom left hand corner of the display.

If the PPC3-7M-AF does not increase the pressure or if the piston floats but drops very quickly:

- check that **[GEN]** is ON (see Section 4.3.9).
- confirm that a pressure supply is connected to the PPC3-7M-AF **SUPPLY** port (see Section 3.4.7).
- be sure a large leak is not present in the test pressure circuit. Once floated, the piston fall rate should be less than the nominal fall rate given in the specifications of the piston-cylinder module being used (see Section 1.1.3).

Pressure may be controlled manually or automatically (see Section 4.1.2). To control pressure manually, turn [GEN] OFF or press [ESCAPE] on the PG Terminal after entering a mass load and use the direct pressure control keys under the PPC3-7M-AF display (see Section 4.2.2.2).

❹ Once the piston has started to float (piston position > -2.5 mm), the motorized piston rotation system engages to rotate the piston (see Section 4.3.8).

If the motorized rotation system does not engage check that:

- **[ROTATE]** is ON (see Section 4.3.8).

Motorized piston rotation may also be activated manually. Turn [ROTATE] OFF. Then press [↻] to engage motorized rotation manually (see Section 4.3.13). To stop rotation, hold [↻] and then press [←]. Current rotation rate can be observed in the SYSTEM SCREEN ([SYSTEM]) (see Section 4.3.5). Never stop piston rotation by running the rotating piston against the upper or lower stop.

❺ Press **[ENTER/SET P]** and enter **<0>** to vent the system (see Section 4.3.11.3). If automated rotation is not ON, be sure to stop the rotation of the piston manually by holding [↻] and then pressing [←]before pressing **[ENTER]**.

© 2008 DH Instruments, a Fluke Company

원문: Fluke Calibration PG7601 메뉴얼(영문) · 제조사 원문 자료입니다. 사양은 제조사 사정에 따라 변경될 수 있습니다.

we measure, we calibrate, we validate.
㈜테솔 · www.tessol.com TS-TL-FLK-094 47 / 234
KOLAS 국제공인교정기관 · ISO/IEC 17025

TS-TL-FLK-094

3.4.11 CHECK PISTON BEHAVIOR MEASUREMENTS

Float the piston and rotate it (see Section 3.4.10).

Press **[SYSTEM]** once to reach the first SYSTEM run screen. Verify that the piston position, piston fall/rise rate, piston rotation rate and piston rotation decay rate are indicating correctly (see Section 4.3.5). The piston position reading system may be calibrated using an on-board procedure if necessary (see Section 6.4.1). **Calibration of piston position reading is recommended when installing a new PG7601-AF.**

Press **[SYSTEM]** again to reach the second SYSTEM run screen. Verify that the piston-cylinder temperature and temperature rate of change are indicating correctly (see Section 4.3.5).

3.4.12 CHECK REFERENCE VACUUM SYSTEM AND ABSOLUTE MODE OPERATION

This section assumes that the PG7601-AF system has already been set up, including pressure interconnection (see Section 3.3).

Before applying pressure to the PG7601-AF system, be sure that all pressure vessels and connections connected to it are rated for the pressure levels that will be applied and that all connections have been properly tightened.

Check the operation of the reference vacuum system and vacuum measurement and set an absolute pressure. Proceed as follows:

❶ Level the PG7601-AF platform using it's bubble level and leveling feet.

Close the vacuum shutoff valve on the PG7601-AF KF25 vacuum reference connection.

Turn on the D16B reference vacuum pump and allow it to warm up for 30 minutes.

Be sure that the platform shutoff valve on the PG7601-AF **TEST** port is open (The knob should be rotated counter clockwise until it stops).

❷ Use **[MODE]** on the PG Terminal to set absolute measurement mode (see Section 4.3.4).

Use **[P-C]** to check that the piston-cylinder selected is the one that is actually mounted in the PG7601-AF platform (see Section 4.3.2).

❸ Press **[P OR M]**, **<1pressure>** to select *pressure entry mode* (see Section 4.3.12).

Press **[ENTER/SET P]** and enter a pressure value to be generated.

❹ Follow the mass loading instruction (see Section 4.1.5)

Install the vacuum bell jar on the PG7601-AF platform.

Close the vacuum vent valve on the back of the PG7601-AF platform.

Open the KF25 vacuum shutoff valve. This connects the vacuum pump to the bell jar and the pressure under the bell jar begins to pull down.

Press **[ENTER]**. The PG Terminal display returns to the MAIN run screen (see Section 4.2.1.2).

Press **[SYSTEM]** twice to observe the value of vacuum read by the PG7601-AF's's built-in vacuum gauge. The indication is **< >20 Pa>** (0.0029 psi) until the pressure under the bell jar is less than 20 Pa (the value of reference vacuum can only be indicated in Pa; 1 Pa = 0.0075 Torr = 0.000145 psi).

On initial vacuum pull down, with the pump fully warmed up, the vacuum should reach the default *Ready* limit (see Section 4.1.3.3) of 5 Pa (0.000725 psi) in less than 3 min 30 sec. Subsequent pull down should be on the order of 1 minute.

원문: Fluke Calibration PG7601 메뉴얼(영문) · 제조사 원문 자료입니다. 사양은 제조사 사정에 따라 변경될 수 있습니다.

TS-TL-FLK-094

we measure, we calibrate, we validate.
㈜테솔 · www.tessol.com TS-TL-FLK-094 48 / 234
KOLAS 국제공인교정기관 · ISO/IEC 17025

If this performance is NOT achieved:

- check the connections between the vacuum pump and the PG7601-AF platform KF25 vacuum port.
- check that the vacuum vent valve on the back of the PG7601-AF platform is properly connected and is closed (handle down).

❺ Once the reference vacuum level has reached the *Ready* limit (see Section 4.1.3.3), the PPC3-7M-AF pressure controller increases or decreases pressure and floats the piston. Piston position is indicated in the bottom left hand corner of the display.

If the PPC3-7M-AF does not increase or decrease the pressure or if the piston floats but drops or rises very quickly after floating:

- check that **[GEN]** is ON (see Section 4.3.9).
- confirm that a pressure supply is connected to the PPC3-7M-AF **SUPPLY** port (see Section 3.3.7).
- confirm that a control vacuum supply is connected to the PPC3-7M-AF **EXHAUST** port (see Section 3.3.8).
- be sure a large leak is not present in the test pressure circuit. Once floated, the piston fall rate should be less than the nominal fall rate given in the specifications of the piston-cylinder module being used (see Section 1.1.3).

Pressure may be controlled manually or automatically (see Section 4.1.2). To control pressure manually, turn [GEN] OFF or press [ESCAPE] on the PG Terminal after entering a mass load and use the direct pressure control keys under the PPC3-7M-AF display. When using PPC3-7M-AF directly, do not make any other changes or adjustments. Do not change units of measure ([UNIT]) or measurement mode ([MODE]).

❻ Once the piston has started to float (piston position > -2.5 mm), the motorized piston rotation system engages to rotate the piston (see Section 4.3.8). If the motorized rotation system does not engage check that:

- **[ROTATE]** is ON (see Section 4.3.8).

Motorized piston rotation may also be activated manually. Turn [ROTATE] OFF and press [↻] to engage motorized rotation manually (see Section 4.3.13). To stop rotation, hold [↻] and then press [←]. Current rotation rate can be observed in the SYSTEM SCREEN ([SYSTEM]) (see Section 4.3.5).

❼ To set the next pressure or vent the system, press **[ENT/SET P]**. To vent the system enter a pressure of **<0>** (see Section 4.3.11.3). If automated rotation is not ON, be sure to stop the rotation of the piston manually before pressing **[ENTER]**.

❽ Close the KF25 vacuum reference shutoff valve on the PG7601-AF platform vacuum reference port.

Open vacuum vent valve on the back of the PG7601-AF platform.

Wait for pressure under bell jar to return to ambient. This takes about 40 seconds.

Remove bell jar.

© 2008 DH Instruments, a Fluke Company

원문: Fluke Calibration PG7601 메뉴얼(영문) · 제조사 원문 자료입니다. 사양은 제조사 사정에 따라 변경될 수 있습니다.

we measure, we calibrate, we validate.
㈜테솔 · www.tessol.com TS-TL-FLK-094 49 / 234
KOLAS 국제공인교정기관 · ISO/IEC 17025

TS-TL-FLK-094

3.5 ADDITIONAL PRECAUTIONS TO TAKE TO MAKE GOOD PRESSURE MEASUREMENTS

Before using PG7601-AF to perform calibrations, consider the following:

- Select/activate the correct piston-cylinder module, mass set and mass loading bell (see Sections 0, 4.5.1.10, 4.5.1.15).
- Set the pressure controller's upper limit (UL) to avoid accidental overpressure (see Section 4.3.9.3).
- Enter the correct value of local gravity at the site of use (see Section 4.5.6).
- Consider head corrections (see Sections 4.3.7).
- Level the PG7601-AF platform properly and check the level often (see Section 3.3.1).
- Select the correct pressure unit of measure and measurement mode (see Sections 4.3.3, 4.3.4).
- Verify that the settings for the sources of variables to be used by PG7601-AF in its calculations of reference pressures are those desired (see Section 4.4).
- Verify that the piston-cylinder module is correctly cleaned and operating properly (see Section 6.3.2).
- Verify that there are NO leaks in the pressure system.
- Always stop piston rotation before changing the pressure. Avoid stopping piston rotation by running the rotating piston against the top or bottom end of stroke stop (see Section 4.3.8).
- Be sure that the platform shutoff valve on the PG7601-AF **TEST** port is open (The knob should be rotated counter clockwise until it stops).

원문: Fluke Calibration PG7601 메뉴얼(영문) · 제조사 원문 자료입니다. 사양은 제조사 사정에 따라 변경될 수 있습니다.

4. General Operation

4.1 OPERATING PRINCIPLES

4.1.1 FUNDAMENTAL OPERATING PRINCIPLE

PG7601-AF operates on the principle of the piston gauge in which pressure is defined by balancing it against a known force on a known area (see Figure 14). The known area is defined by a vertically mounted piston rotating in a cylinder and the known force is applied to the piston by loading it with known mass subjected to acceleration due to gravity. When the force applied by the pressure and the force applied by the mass accelerated by gravity are in equilibrium, the piston floats. The floating piston must be rotated to keep it centered in the cylinder and perfectly mobile. The floating piston moves up and down in its stroke, adjusting the pressurized volume, maintaining the force equilibrium and maintaining the pressure constant. The pressure can be calculated following the equation in Figure 14 (see also Section 9.2). The pressurized gas under the piston also lubricates the gap between the piston and the cylinder.

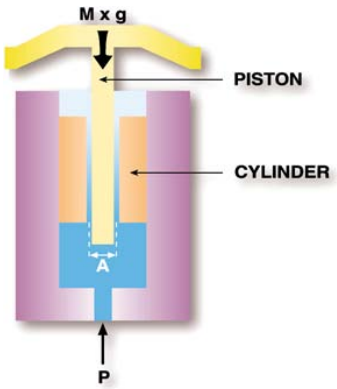

$$P = \frac{\sum_i M_i g_l \left(1 - \frac{\rho_a}{\rho_m}\right) + \pi D \tau}{A_{(T_r, P_r)} \left[1 + (\alpha_p + \alpha_c)(T - T_r)\right](1 + \lambda P)} - \rho_r g_l h$$

Figure 14. Piston gauge operating principle

The PG7601-AF platform holds the piston-cylinder module and allows mass to be loaded on top of the piston and pressure to be applied under the piston. Three piston-cylinder modules with different piston diameters provide three ranges using a single mass set. The masses can be at atmospheric pressure for gauge mode or absolute by addition of atmosphere measurements. The bell jar can be placed over the masses and evacuated for absolute with a vacuum reference operation (see Section 4.3.4).

The PPC3-7M-AF pressure controller is used to adjust the pressure in the system to float the piston. The pressure controller can be operated manually from its front panel or automatically under the control of the PG7601-AF platform.

The measurement uncertainty in the pressure defined by the piston gauge depends on the uncertainty in the effective area of the piston-cylinder and the force applied by the mass accelerated by gravity. PG7601-AF stores the calibrated values of the piston-cylinders and masses it uses in digital IDs (see Section 4.5.1). To determine the effective area of the piston-cylinder and the force applied by the masses under actual operating conditions, a number of influences on these values must be quantified and taken into consideration. For this reason, PG7601-AF includes extensive features to monitor the behavior and conditions of the piston-cylinder as well as ambient conditions that affect pressure definition. PG7601-AF

© 2008 DH Instruments, a Fluke Company

원문: Fluke Calibration PG7601 메뉴얼(영문) · 제조사 원문 자료입니다. 사양은 제조사 사정에 따라 변경될 수 있습니다.

TS-TL-FLK-094

we measure, we calibrate, we validate.
㈜테솔 · www.tessol.com TS-TL-FLK-094 51 / 234
KOLAS 국제공인교정기관 · ISO/IEC 17025

uses the piston-cylinder, mass and ambient condition information to calculate the pressure defined by a given mass load or the mass load needed to define a given pressure. The source of each value used by PG7601-AF in its calculations can be selected by the user between PG7601-AF's internal measurements, default values or user entered values. These sources are defined in SETUP files (see Section 4.4).

Once PG7601-SYS-AF system has been set up, it is used in day-to-day operation either to define pressures applied to a device or system under test or to measure a stable pressure. In typical operation, the operator:

❶ Selects the desired pressure unit of measure (see Section 4.3.3).

❷ Selects the appropriate piston-cylinder to cover the pressure range (see Section 4.3.2).

❸ Selects the desired pressure measurement mode (gauge, absolute) (see Section 4.3.4).

❹ Sets the head difference between the PG7601-AF reference level and the device under test (see Section 4.3.7).

❺ Selects *mass to pressure* or *pressure to mass* operating mode (see Section 4.3.12).

❻ Enters a pressure to define or a mass value to be loaded (see Section 4.3.11.1, 4.3.11.2).

❼ Loads the specified mass total.

❽ If operating in absolute with vacuum reference mode (see Section 4.3.4), installs the bell jar and opens the vacuum shutoff valve.

❾ PPC3-7M-AF pressure controller adjusts pressure to float the piston (see Section 4.3.9) and the PG7601-AF rotates the piston. Once the piston is floating and rotating (and vacuum has reached a low enough level in absolute by vacuum mode), all *Ready* indicators indicate *Ready* (see Section 4.1.3) and a measurement can be made.

4.1.2 PRESSURE CONTROL, MANUAL AND AUTOMATED

Pressure control in the PG7601-SYS-AF system is provided by the PPC3-7M-AF pressure controller. The pressure controller uses internal on/off solenoid valves to admit and exhaust pressure as needed to set the desired pressure and float the PG7601-AF's piston. When it is idle (not controlling pressure), all its valves are shut and it does not affect the pressurized test system. Once the pressure controller has floated the piston, it is put into the idle state so that the pressure is controlled only the by the floating piston.

The pressure controller may be operated manually or automatically.

Normal operation of the PG7601-SYS-AF system is using automated pressure control. Automated pressure control relieves the operator of the chore of setting and adjusting pressure. It has the advantages of setting pressure in a consistent manner and minimizing the risk of accidental overpressure. In automated pressure control, the PG7601-AF AutoGen function controls the pressure controller over an RS232 communications connection (see Section 3.3.2). Use **[GEN]** to turn AutoGen ON (see Section 4.3.9).

If desired, the operator can use the PPC3-7M-AF as a manual pressure controller. For manual pressure control, use **[GEN]** to turn AutoGen OFF so that the PG7601-AF platform does not communicate with the pressure controller (see Section 4.3.9). Then the direct pressure control keys on the pressure controller front panel (see Section 4.2.2.2) can be used to increase and decrease pressure, including making small pressure steps to adjust the position of the floating piston.

Automated and manual pressure control can also be combined. For example, with AutoGen ON, the PPC3-7M-AF can be used to float the piston automatically, then **[ESCAPE]** on the PG7601-AF Terminal can be used to interrupt the AutoGen function so the operator can adjust piston position manually using direct pressure control keys on the pressure controller front panel.

원문: Fluke Calibration PG7601 메뉴얼(영문) · 제조사 원문 자료입니다. 사양은 제조사 사정에 따라 변경될 수 있습니다.

TS-TL-FLK-094

we measure, we calibrate, we validate.
㈜테솔 · www.tessol.com TS-TL-FLK-094 52 / 234
KOLAS 국제공인교정기관 · ISO/IEC 17025

It is not necessary to turn GEN off to interrupt automated pressure control. Pressing [ESCAPE] from the main run screen while automated pressure control is active suspends automated pressure control allowing manual pressure controller operation. Automated pressure control will resume the next time [ENTER/SET P] is used.

When using PPC3-7M-AF for direct pressure control after interrupting automated pressure control, do not make any other changes or adjustments. Do not change units of measure ([UNIT]) or measurement mode ([MODE]).

4.1.3 PRESSURE *READY/NOT READY* INDICATION

The PG7601-AF Terminal MAIN run screen (see Section 4.2.1.2) provides a pressure *Ready/Not Ready* indication. This indication is intended to give the user a clear and objective indication of when PG7601-AF conditions are such that the value of pressure it is defining is valid and in tolerance. There are three *Ready/Not Ready* indication characters to indicate the status of the three main *Ready/Not Ready* criteria. The *Ready/Not Ready* indication characters are shown on the first line, top left hand side, of the MAIN run screen.

1. Piston position and vertical movement *Ready/Not Ready*.
2. Piston rotation *Ready/Not Ready*.
3. Reference vacuum (*absolute by vacuum* measurement mode only) *Ready/Not Ready*.

```
1 2 3
*** 100.4755 kPa g h
+ 0.1 mm 10.00564 kg
```

For each *Ready/Not Ready* indication character, **<*>** indicates a *Ready* condition and any character other than **<*>** indicates *Not Ready*. Therefore, **<***>** or **<** >** indicate that all conditions necessary for an in tolerance pressure definition are present.

See Sections 4.1.3.1, 4.1.3.2 and 4.1.3.3 for details on each of the three *Ready/Not Ready* indicating characters.

The criteria used to distinguish between Ready and Not Ready conditions can be customized by the user (see Sections 4.1.3.1, 4.1.3.2 and 4.1.3.3).

4.1.3.1 PISTON POSITION *READY/NOT READY*

The piston position *Ready/Not Ready* character indicates *Ready* or *Not Ready* based on the position of the piston in its vertical stroke (see Section 4.1.3.1). This ensures that pressure measurements are made with the piston not more than a certain distance from mid-float position and that measurements are not made while pressure is being adjusted.

The piston position *Ready/Not Ready* character is the first character from the left on the top line of the MAIN run screen (see Section 4.2.1.2).

The piston position *Ready/Not Ready* criterion is determined by the current SETUP file and can be customized by the user (see Section 4.4).

Piston position *Ready/Not Ready* character indications include:

<*> Piston position *Ready* (within the position limits specified in the current SETUP file) (see Section 4.4).

<↓> Piston position *Not Ready*, low (below the position limits specified in the current SETUP file, see Section 4.4) **or AutoGen is adjusting piston position**.

© 2008 DH Instruments, a Fluke Company

원문: Fluke Calibration PG7601 메뉴얼(영문) · 제조사 원문 자료입니다. 사양은 제조사 사정에 따라 변경될 수 있습니다.

we measure, we calibrate, we validate.
KOLAS 국제공인교정기관 · ISO/IEC 17025
㈜테솔 · www.tessol.com TS-TL-FLK-094 53 / 234

TS-TL-FLK-094

The **<↓>** flashes if the piston is not at the bottom stop position to alert the user that this indicator is *Not Ready*.

<↑> Piston position *Not Ready*, high (above the position limits specified in the current SETUP file, see Section 4.4) **or AutoGen is adjusting piston position**. The **<↑>** flashes if the piston is not at the top stop position to alert the user that this indicator is *Not Ready*.

<?> Piston position not known (current specified mass load is less than the load of the piston + bell). The bell must be installed for PG7601-AF piston position measurement to operate correctly so piston position values shown are not valid when the bell is not installed.

Piston position always indicates Not Ready if automated pressure generation is adjusting pressure, regardless of actual piston position.

4.1.3.2 PISTON ROTATION *READY/NOT READY*

The piston rotation *Ready/Not Ready* character indicates *Ready* or *Not Ready* based on the rotation rate of the piston.

The piston rotation *Ready/Not Ready* character is the second character from the left on the top line of the MAIN run screen (see Section 4.2.1.2).

The piston rotation rate *Ready/Not Ready* criterion is specific to the currently active piston-cylinder module and can be edited by the user (see Sections 4.5.1.1).

Piston rotation rate *Ready/Not Ready* character indications include:

<*> **Rotation rate *Ready:*** Rotation rate is higher than the minimum rotation rate limit specified in the current piston-cylinder module digital ID (see Section 4.5.1.1).

<<> **Rotation rate *Not Ready,* low:** Rotation rate is less than the lower rotation rate limit specified in the current piston-cylinder module digital ID (see Section 4.5.1.1) or motorized rotation system is currently engaged. Note that the low rotation limit is automatically reduced to 5 rpm when the mass loaded on the piston is less than 3 kg. The **<<>** flashes if the piston is floating to alert the user that this indicator is *Not Ready*.

<?> **Rotation rate not known:** Current specified mass load is less than the load of the (piston + bell). The bell must be installed for PG7601-AF piston rotation rate measurement to operate correctly so piston rotation rate cannot be measured when the bell is not installed.

Under 3 kg mass load, the low rotation rate Ready limit automatically goes to 5 rpm.

4.1.3.3 VACUUM REFERENCE *READY/NOT READY*

The vacuum reference *Ready/Not Ready* character is only active when operating in *absolute by vacuum* mode (see Section 4.3.4).

The vacuum reference *Ready/Not Ready* character indicates *Ready* or *Not Ready* based on the value of reference vacuum when making measurements in *absolute by vacuum* mode. This ensures that measurements of absolute pressure with a vacuum reference will be made with the vacuum under the

원문: Fluke Calibration PG7601 메뉴얼(영문) · 제조사 원문 자료입니다. 사양은 제조사 사정에 따라 변경될 수 있습니다.

PG7601-AF bell jar lower than a specified value. When the vacuum is not low enough, vacuum measurement errors may be excessive.

The vacuum reference *Ready/Not Ready* character is the third character from the left on the top line of the MAIN run screen (see Section 4.2.1.2).

The vacuum reference *Ready/Not Ready* criterion is determined by the current SETUP file and can be customized by the user (see Section 4.4). The vacuum reference criterion is a fixed value that can be customized by the user when the vacuum reference selection in the SETUP file is *internal* (the default is 5 Pa (0.00075 psi). If the selection in the SETUP file is NOT *internal*, the vacuum reference *Ready/Not Ready* character always indicates *Ready* and the value cannot be customized.

Vacuum reference *Ready/Not Ready* character indications include:

< > **(Blank) Vacuum reference *Ready/Not Ready* is not in use.** Current measurement mode is not *absolute by vacuum*.

<*> **Vacuum reference *Ready.*** Vacuum value is below limit specified in the current SETUP file if source is *internal* OR source is *default* or *user* and the vacuum value is not a measured value *(*see Section 4.4).

< > > **Vacuum reference *Not Ready.*** Current SETUP file source for vacuum is *internal* and vacuum value is above the limit specified (see Section 4.4). The **<>>** flashes if the piston is floating to alert the user that this indicator is *Not Ready*.

4.1.4 PISTON POSITION

When operating a PG7601-AF piston gauge, reference pressure values are defined by loading known mass values on the piston and adjusting the pressure to float the piston. Piston position is measured and displayed real time on the MAIN run screen (see Section 4.2.1.2) and in the first SYSTEM run screen (see Section 4.3.5). Piston position is used as a criterion for the *Ready/Not Ready* indication as valid measurements can only be made when the piston is within the correct position limits (see Section 4.1.3.1).

The full piston stroke is ± 4.5 mm from the midstroke position. The stroke is divided into different positions and zones as illustrated in Figure 15. These zones are:

- **High and low stops:** The piston is at the minimum or maximum end of stroke. The pressure applied to the piston is higher (at high stop) or lower (at low stop) than that corresponding to the mass loaded on the piston. The high and low stop positions are fixed.
- **High and low spring zones:** The combination of pressure and the force of the high or low stop springs have caused the piston to leave the stop. The pressure applied to the piston is within the equivalent of a 2 kg load of the pressure corresponding to the mass loaded on the piston. The high and low spring zones indicate the piston is **about to float**. The spring zone positions are fixed.
- **High and low measurement zones:** The piston is within the zone in which a *Ready* measurement can be made (see Section 4.1.3.1). The pressure applied to the piston is the pressure corresponding to the mass loaded on the piston. The default value of the high and low measurement zones is ± 2.5 mm around midstroke position. This value can be adjusted in the SETUP file (see Section 4.4).
- **Piston float target:** Applies only when AutoGen automated pressure control is ON (see Section 4.3.9). The float target is the position to which the PPC3-7M-AF must set the piston before control is stopped and a *Ready* condition can occur.

© 2008 DH Instruments, a Fluke Company

원문: Fluke Calibration PG7601 메뉴얼(영문) · 제조사 원문 자료입니다. 사양은 제조사 사정에 따라 변경될 수 있습니다.

TS-TL-FLK-094

we measure, we calibrate, we validate. ㈜테솔 · www.tessol.com TS-TL-FLK-094 55 / 234

KOLAS 국제공인교정기관 · ISO/IEC 17025

- **Midstroke:** The piston is at the middle of its stroke. The bottom of the piston (or its equivalent for the hollow 10 kPa/kg and 50 kPa/kg pistons) is at the reference level marked on the mounting post (see Section 4.3.7). There is equal stroke available from midstroke to the high and low stops.

The piston position monitoring system is driven by the internal ring in the base of the mass loading bell. When the bell is not installed, piston position cannot be measured. If the current mass load is less than the mass of the piston + bell, PG7601-AF displays < ---- > where piston position is normally displayed. If the current mass load is greater than the mass of the piston + bell but the bell is not actually installed, the piston position indication is not valid.

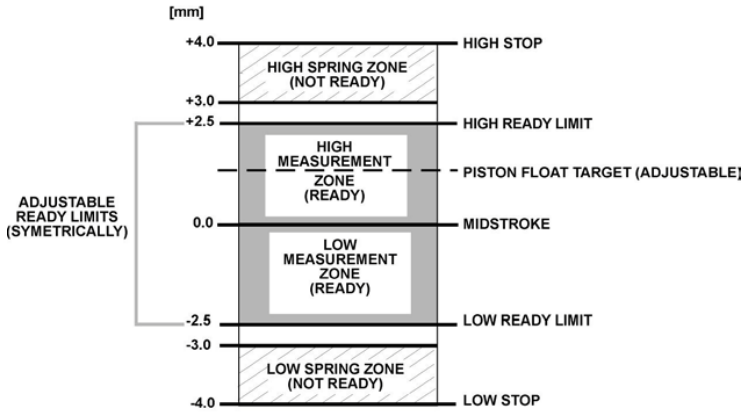

Figure 15. Piston stroke and zones

4.1.5 MASS LOADING PROTOCOL

❍ PURPOSE

To provide the operator with mass loading instructions and allow mass entry in convenient nominal values which PG7601-AF can accurately convert to measured mass values to determine the actual mass load.

❍ PRINCIPLE

All PG7601-AF manual mass set masses of 0.1 kg and above, including the mass loading bell and the piston assembly, are adjusted so that their true mass is within ± 20 ppm of their **nominal value**. The **nominal value** is marked on each mass. Each mass's **actual individual value** is measured with lower uncertainty than ± 20 ppm and reported in the mass set, mass loading bell or piston-cylinder module calibration report. These measured **actual values** are used by PG7601-AF in all of its defined pressure calculations. The **nominal mass values**, and the sequential numbers of the **nominal masses** when there are several of the same value, are used by PG7601-AF to describe the mass to load or the mass that is loaded. Following simple mass loading rules allows PG7601-AF to correctly transform **actual mass values** into **nominal mass values** and vice-versa so that mass loading instructions to the operator and the operator mass entries can be made in simple **nominal mass instructions** while representing **actual mass values.**

Since the **nominal mass values** written on the masses and the **actual values** of the individual masses are different, in *pressure to mass* mode (see Section 4.3.12) the **actual mass value** loaded on the piston will be different from the mass loading instruction. In the same manner, *in mass to pressure* mode the **nominal value** of the mass load that the operator enters is different from the **actual mass** loaded on the piston. The mass value shown in the MAIN run screen (see Section 4.2.1.2) is always the **actual mass value**. The mass loading instruction given in *pressure to mass* mode and the mass value entered by the

원문: Fluke Calibration PG7601 메뉴얼(영문) · 제조사 원문 자료입니다. 사양은 제조사 사정에 따라 변경될 수 있습니다.

operator in *mass to pressure mode* is always the **nominal mass value**. If PG7601-AF mass loading protocol is followed, the conversion from **nominal mass** to **actual mass** occurs correctly allowing very simple nominal mass loading and accounting for the operator while using very low uncertainty measured mass values for metrological calculations.

❍ OPERATION

To avoid wear to masses and to the piston-cylinder module end of stroke stops, the piston should not be rotating when masses are loaded or unloaded. Before loading masses, stop piston rotation by hand or using the motorized rotation system (see Section 4.3.13).

PG7601-AF instructions to the operator of mass to load, and operator entries of the mass that is loaded, are always expressed in terms of nominal mass within 0.1 kg and in terms of grams for values under 0.1 kg.

In *pressure to mass* mode, the instruction of the mass to load to achieve the requested pressure is formatted:

```
Load nominal mass:
 mm.m kg and tt.tt g
```

In *mass to pressure* mode, the entry of the mass currently loaded on the piston is formatted:

```
Nominal mass load:
mm.m kg and tt.tt g
```

mm.m and tt.tt must be expressed and loaded following the mass loading rules below:

Mass Loading Rules

See Section 3.3.4 and Section 4.1.5, PRINCIPLE for PG7601-AF mass set principles and protocol information. Refer to display examples immediately above to identify mm.m and tt.tt. See **EXAMPLES: Mass Loading** below for mass loading examples.

PG7601-AF mass loading entries and instructions are always formatted:

mm.m kg and tt.tt g

- The mass set being used must be properly set up (see Section 3.3.4) and must be selected as the active mass set (see Section 4.5.1.10).
- mm.m is made up of the piston, the mass loading bell and mass set masses of 0.1 kg and greater.
- mm.m always includes the mass loading bell and then the makeup mass, if possible.
- mm.m is made up of the largest masses possible rather than a combination of smaller masses.
- When loading masses of which there are more than one (e.g. 5 kg, 2 kg, 0.2 kg), they are always loaded in sequential order (1, 2, 3…).
- tt.tt is always made up of gram masses of 50 g and under from the trim mass set. These masses can be loaded in any combination and any order to reach the total gram value.

EXAMPLE: To load 5 kg on the 50 kPa/kg piston:

USE the piston (0.2 kg) + the mass loading bell (0.3 kg) + the 4.5 kg makeup mass.

DO NOT USE the piston + the mass loading bell + 2 kg #1 + 2 kg #2 + 0.5 kg #1.

EXAMPLE: When loading (3) 5 kg masses:

USE 5 kg mass #1, #2 and #3.

© 2008 DH Instruments, a Fluke Company

원문: Fluke Calibration PG7601 메뉴얼(영문) · 제조사 원문 자료입니다. 사양은 제조사 사정에 따라 변경될 수 있습니다.

TS-TL-FLK-094

we measure, we calibrate, we validate.
KOLAS 국제공인교정기관 · ISO/IEC 17025

DO NOT USE 5 kg mass #4, #3, #1.

This rule will be followed automatically if masses are installed and used as described in Section 3.3.4.

EXAMPLE: Load 15.2 kg and 14.63 g on the 200 kPa/kg piston

Load:	Total:
piston (0.2 kg) ➔	00.2 kg, 00.00 g
bell (0.3 kg) ➔	00.5 kg, 00.00 g
4.5 kg #1 (makeup mass) ➔	05.0 kg, 00.00 g
5 kg #1, #2	15.0 kg, 00.00 g
0.2 kg #1	15.2 kg, 00.00 g
14.63 g trim mass	15.2 kg, 14.630 g

EXAMPLE: Load 35.0 kg and 00.00 g on the 10 kPa/kg piston

Load:	Total:
piston (0.4 kg) ➔	00.4 kg, 00.00 g
bell (0.3 kg) ➔	00.7 kg, 00.00 g
4.5 kg #1 (makeup mass) ➔	05.2 kg, 00.00 g
5 kg #1, #2, #3, #4, #5	30.2 kg, 00.00 g
2 kg #1, #2	34.2 kg, 00.00 g
0.5 kg #1	34.7 kg, 00.00 g
0.2 kg #1	34.9 kg, 00.00 g
0.1 kg #1	35.0kg, 00.00 g

EXAMPLE: Load 3.4 kg and 00.00 g on the 10 kPa/kg piston

Load:	Total:
piston (0.4 kg) ➔	00.4 kg, 00.00 g
bell (0.3 kg) ➔	00.7 kg, 00.00 g
2 kg #1➔	02.7 kg, 00.00 g
0.5 kg #1	03.2 kg, 00.00 g
0.2 kg #1	03.4 kg, 00.00 g

When PG7601-AF provides mass loading instructions and calculates the true mass of the mass currently loaded, it assumes that the mass set in use has been set up correctly (see Section 3.3.4).
For PG7601-AF mass loading protocol to operate properly, the mass set in use must be EXACTLY the mass set that is defined by the active mass set digital ID (see Section 4.5.1.10).

원문: Fluke Calibration PG7601 메뉴얼(영문) · 제조사 원문 자료입니다. 사양은 제조사 사정에 따라 변경될 수 있습니다.

4.2 USER INTERFACE

The local user interface of the PG7601-SYS-AF system is the PG7601-AF's PG Terminal keypad and display. In normal operation, the PPC3-7M-AF pressure controller operates automatically under the control of the PG7601-AF platform and the PPC3-7M-AF front panel is not used. The exception is when the pressure controller is used manually and controlled by the operator through its front panel direct pressure control keys (see Section 4.2.2.2).

The PG7601-AF system may also be operated using commands from an external computer over the PG7601-AF platform's RS232 (COM1) or IEEE-488 interfaces (see Section 5).

4.2.1 PISTON GAUGE (SYSTEM INTERFACE)

4.2.1.1 KEYPAD LAYOUT AND PROTOCOL

The PG7601-AF's PG Terminal is the local user interface to the PG7601-SYS-AF system.

The PG Terminal has a 4 x 4 keypad for local operator access to direct functions, function menus and for data entry.

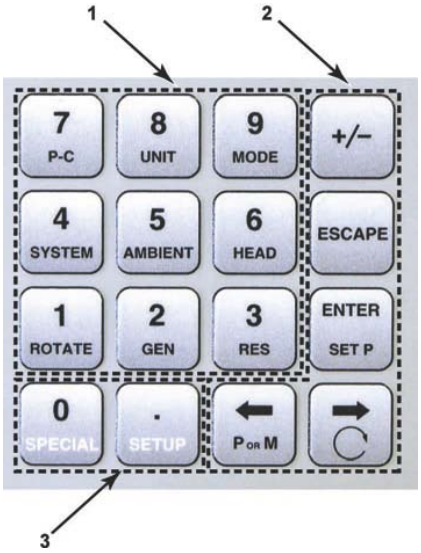

1. The **Function/Data keys** allow very commonly used functions to be accessed directly from the main run screen by a single keystroke. The name of the function is on the bottom half of the key (see Section 4.3). These keys enter numerical values when editing.
2. The **Editing and Execution keys** are for execution, suspending execution, backing up in menus and editing entries.
3. The **Menu/Data keys** provide access to function menus from the main run screen. The menu name is on the bottom half of the key. The SETUP menu is for more frequently used functions. The SPECIAL menu is for functions that are NOT generally used as a part of day to day operation. These keys enter numerical values when editing.

Figure 16. PG Terminal keypad layout

Key press confirmation is provided by both tactile and audible feedback. A single beep confirms a valid entry. A descending two note tone signals an invalid entry. The valid entry audible feedback can be suppressed or modified using **[SPECIAL]**, **<5prefs>**, **<2sound>** (see Section 4.5.4.2).

Pressing **[ENTER/SET P]** generally causes execution or forward movement in the menu tree. **[ENTER/SET P]** is also used to enter a command to set a pressure.

Pressing **[ESCAPE]** generally causes movement back in the menu tree and/or causes execution to cease or suspend without changes being implemented. Pressing **[ESCAPE]** repeatedly eventually returns to the MAIN run screen. From the MAIN run screen, pressing and holding **[ESCAPE]** allows momentary viewing of the PG7601-AF identification screen.

Pressing **[+/-]** changes a numerical sign when editing. It also toggles through multiple screens when available.

© 2008 DH Instruments, a Fluke Company

원문: Fluke Calibration PG7601 메뉴얼(영문) · 제조사 원문 자료입니다. 사양은 제조사 사정에 따라 변경될 수 있습니다.

TS-TL-FLK-094

we measure, we calibrate, we validate.
㈜테솔 · www.tessol.com TS-TL-FLK-094 59 / 234
KOLAS 국제공인교정기관 · ISO/IEC 17025

Pressing **[←]** and **[→]** allows reverse and forward cursor movement when editing data entry. These keys are also used to scroll through choices.

Menu selections can be made by pressing the number of the selection directly or by pressing **[←]** and **[→]** to place the cursor on the number of the desired selection and pressing **[ENTER]**.

Some screens go beyond the two lines provided by the display. This is indicated by a flashing arrow in the second line of the display. Press [←] and [→] to move the cursor to access the lines that are NOT visible or directly enter the number of the hidden menu choice if you know it.

4.2.1.2 MAIN RUN SCREEN

The PG7601-AF MAIN run screen is its home display that is reached on power up and from which other functions and menus are accessed. It is the top level of all menu structures.

The MAIN run screen is where PG7601-AF is left in normal operation. It displays the pressure defined by PG7601-AF, the *Ready/Not Ready* condition and a variety of other information. See Figure 17 for MAIN run screen details.

The screen described below is called the MAIN run screen. The SYSTEM and AMBIENT screens (see Sections 4.3.5 and 4.3.6) are also run screens in the sense that all the other functions may be accessed directly from them and pressure or mass entries may be made from them. See Section 4.2.1.3 for a description of PG7601-AF's main menu/function structure.

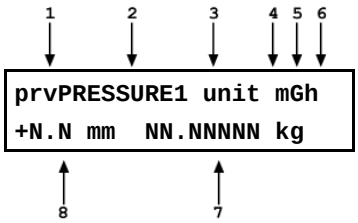

DISPLAY FIELD	NAME	PURPOSE	CONTENTS	SECTION
1. prv	*Ready/Not Ready* indicators	Indicates status of measurement *Ready/Not Ready* criteria	**<*>**: *Ready* **<not *>**: *Not Ready*	4.1.3
1a. p	Piston position *Ready/Not Ready* indicator	Indicates status of piston position *Ready/Not Ready* criterion	**<*>**: *Ready* **<↑>**: *Not Ready*, piston too high **<↓>**: *Not Ready*, piston too low **<?>**: Piston position not available Flashes if condition *Not Ready* and piston is floating	4.1.3.1

원문: Fluke Calibration PG7601 메뉴얼(영문) · 제조사 원문 자료입니다. 사양은 제조사 사정에 따라 변경될 수 있습니다.

DISPLAY FIELD	NAME	PURPOSE	CONTENTS	SECTION
1b. r	Piston rotation *Ready/Not Ready* indicator	Indicates status of piston rotation *Ready/Not Ready* criterion	**<*>**: *Ready* **< < >**: *Not Ready*, rotation rate too low or motorized rotation engaged **<?>**: Rotation rate not available Flashes if condition *Not Ready* and piston is floating	4.1.3.2
1c: v	Reference vacuum *Ready/Not Ready* indicator	Indicates status of reference vacuum level *Ready/Not Ready* criterion	**< >**: Blank, vacuum reference *Ready/Not Ready* not in use (gauge mode) **<*>**: *Ready* **< > >**: *Not Ready*, vacuum level too high Flashes if condition *Not Ready* and piston is floating	4.1.3.3.
2. PRESSURE1	Defined pressure	Pressure defined by PG7601-AF when piston is floating with indicated mass load and all conditions are *Ready*	Numerical pressure value and sign	4.1.1
3. UNIT	Unit of measure	Identifies pressure unit of measure in which PRESSURE1 is displayed	Pressure unit of measure abbreviation	4.3.3
4. m	Measurement mode	Identifies measurement mode of displayed pressure	**<a>**: absolute **<g>**: gauge	4.3.4
5. G	AutoGen indicator	Indicates status of automated pressure generation	**< >**: blank, AutoGen is OFF **<G>**: AutoGen is ON Flashes if AutoGen is ON and currently actively controlling	4.3.9
6. h	Head correction indicator	Indicates whether a fluid head correction is applied to PRESSURE1	**<h>**: the fluid head is not zero **<blank>**: fluid head is zero	4.3.7
7. NN.NNNNN kg	Mass load	Indicates current true mass load (assuming mass loading instructions and protocol have been followed)	numerical mass value	4.1.5
8. +N.N mm	Piston position	Indicates the current piston position relative to midstroke in mm	numerical value of piston position Blank if piston position not available	4.1.4

Figure 17. Platform MAIN run screen display fields

When a number is too large to display in the allocated screen space, PG7601-AF displays <********> or <OVERFLOW>.

The PG Terminal has a screen saver function that causes the display to dim if NO key is pressed for 10 minutes. Pressing a key restores full power to the display. The screen saver activation time can be changed or screen saving can be completely disabled (see Section 4.5.4.1).

 © 2008 DH Instruments, a Fluke Company

원문: Fluke Calibration PG7601 메뉴얼(영문) · 제조사 원문 자료입니다. 사양은 제조사 사정에 따라 변경될 수 있습니다.

4.2.1.3 GENERAL FUNCTION/MENU FLOW CHART

The local operator interface with PG7601-AF system is provided by the PG Terminal keypad and display. Normal PG7601-AF operation is organized around run screens from which functions and menus are accessed. The run screens include:

- **MAIN run screen:** Displays *Ready/Not Ready*, defined pressure, piston position and mass load.
- **(2) SYSTEM run screens:** Display piston position, rotation, temperature and reference vacuum.
- **AMBIENT run screen:** Displays ambient pressure temperature, relative humidity and local gravity.

The flow chart below outlines the operating protocol of the run screens and associated key presses.

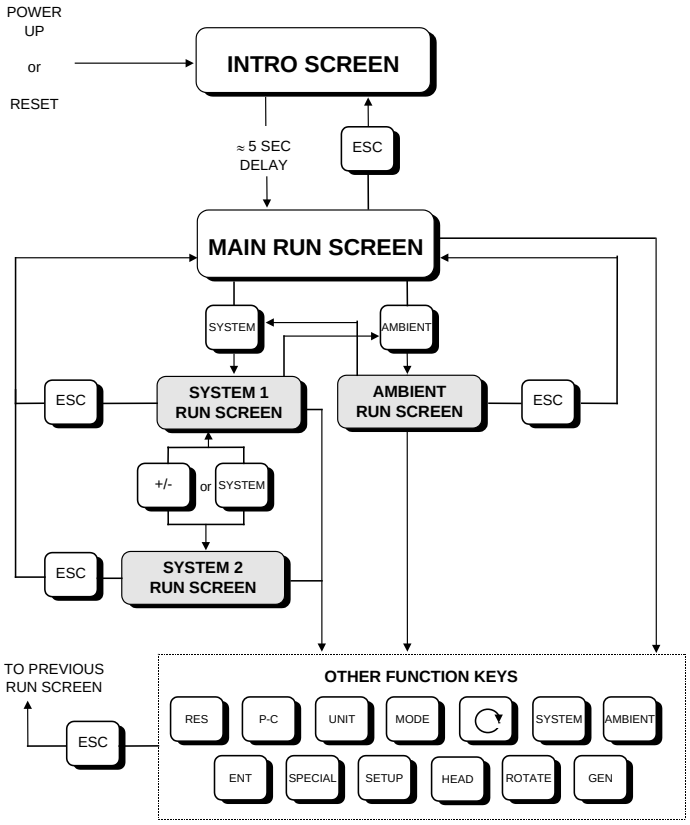

Figure 18. RUN screen flow chart

4.2.1.4 SOUNDS

The PG Terminal is equipped with a variable frequency tone device to provide audible feedback and alarms. Some sounds can be modified and all sounds can be suppressed (see Section 4.5.4.2). Sounds are used for the following indications:

Valid key press	Brief high frequency beep.
Invalid key press	Descending, two tone blurp.
Piston left end of stroke high or low	Three rapid valid key press beeps. Piston was at low stop or high stop and just entered spring zone (see Section 4.1.4).

원문: Fluke Calibration PG7601 메뉴얼(영문) · 제조사 원문 자료입니다. 사양은 제조사 사정에 따라 변경될 수 있습니다.

4.2.2 PRESSURE CONTROLLER

The normal user interface to the system is the PG7601-AF Platform's PG Terminal (see Section 4.2.1).

PPC3-7M-AF is the pressure controlling component of the PG7601-SYS-AF system. In normal operation, the PPC3-7M-AF pressure controller operates automatically under the control of the PG7601-AF platform and the pressure controller front panel is not used. The exception is when the pressure controller is used manually and controlled by the operator through its front panel direct pressure control keys.

The PPC3-7M-AF pressure controller is a component of the PG7601-SYS-AF system. It can also act as a stand alone component. For information on use of PPC3-7M-AF outside of the PG7601-SYS-AF system, see the PPC3 Operation and Maintenance Manual.

4.2.2.1 KEYPAD LAYOUT AND PROTOCOL

In typical PG7601-SYS-AF system operation, the PPC3-7M-AF pressure controller keypad is not used. Occasionally, when using manual pressure control (see Section 4.1.2), [ENT/SET P] may be used to set a pressure.

The PPC3 has a function/data keypad for local operator access to direct functions, function menus and for data entry.

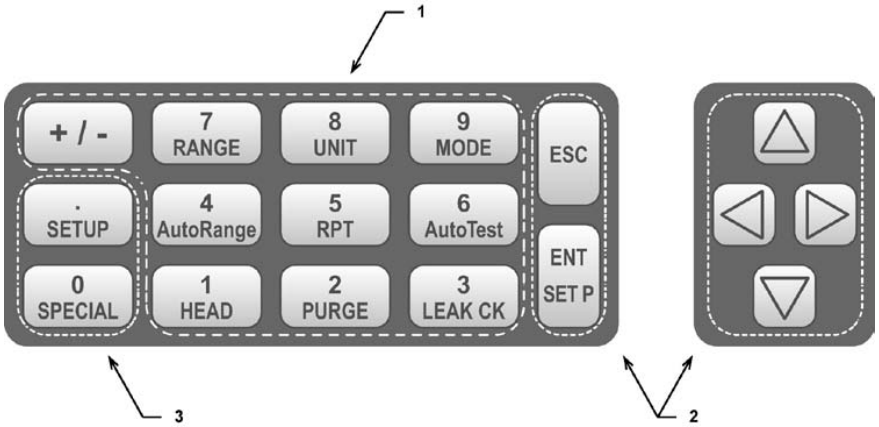

1. The **Function/Data keys** allow very commonly used functions to be accessed directly by a single keystroke when pressed from the MAIN run screen (see PPC3 Operation and Maintenance Manual). The name of the function is on the bottom half of the key. These keys enter numerical values when editing.
2. The **Editing and Execution keys** are for starting and suspending command execution, cursor control in menus and editing entries.
3. The **Menu/Data keys** provide access to function menus when pressed from the MAIN run screen. The menu name is on the bottom half of the key. The SETUP menu is for more frequently used functions. The SPECIAL menu is for functions that are not generally used as a part of day to day operation. These keys enter numerical values when editing.

Figure 19. Pressure controller keypad layout

Pressing **[ENT/SET P]** generally causes execution or forward movement in the menu tree. Pressing **[ENT/SET P]** from the MAIN run screen allows an automated pressure control command to be given.

© 2008 DH Instruments, a Fluke Company

원문: Fluke Calibration PG7601 메뉴얼(영문) · 제조사 원문 자료입니다. 사양은 제조사 사정에 따라 변경될 수 있습니다.

TS-TL-FLK-094

we measure, we calibrate, we validate.
㈜테솔 · www.tessol.com TS-TL-FLK-094 63 / 234
KOLAS 국제공인교정기관 · ISO/IEC 17025

Pressing **[ESC]** moves back in the menu tree and/or causes execution to cease or suspend. Pressing **[ESC]** repeatedly eventually returns to the MAIN run screen and, from there, allows momentary viewing of the PPC3 introduction screen.

Pressing **[+/-]** changes a numerical sign when editing. It also toggles through multiple screens when available and is a shortcut to a momentary display of the active RANGE from the MAIN run screen.

Pressing **[△]**, **[▽]**, **[◁]** and **[▷]** allows reverse, forward and up, down cursor movement when editing data entry or moving in menus.

The PPC3-7M-AF pressure controller is a component of the PG7601-SYS-AF system. It can also act as a stand alone component. For information on use of PPC3-7M-AF outside of the PG7601-SYS-AF system, see the PPC3 Operation and Maintenance Manual provided on the PG7601-SYS-AF Support Disc.

4.2.2.2 DIRECT PRESSURE CONTROL KEYS

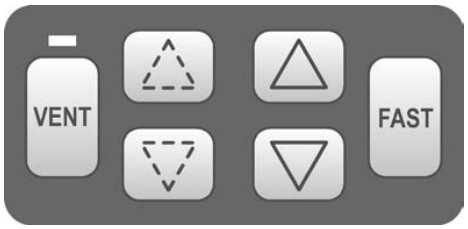

Figure 20. Pressure controller direct pressure control keys

The **[ENT/SET P]** key of the PPC3-7M-AF main keypad can be used to set a target pressure that PPC3-7M-AF will automatically set and maintain. Once the target pressure has been reached, control at the target pressure value continues until **[ESC]** or another function key is pressed.

The PPC3-7M-AF direct pressure control keys (Figure 20) provide direct manual control of pressure increase, decrease, jog and vent. They can be used to adjust pressure manually directly under operator control rather than under control of the PG7601-AF AutoGen automated pressure control function (see Section 4.3.9).

Pressing the **[△]** or **[▽]** direct pressure control keys causes pressure to increase or decrease at the slow slew rate. Holding **[FAST]** pressed while pressing **[△]** or **[▽]** causes the pressure increase or decrease speed to change from slow to fast.

Pressing **[VENT]** causes PPC3-7M-AF to control pressure to near atmospheric pressure and then open its internal vent valve. On-going execution of the vent function is indicated by lighting a RED LED just above the **[VENT]** key. Completion of the vent process is indicated by the PPC3-7M-AF's *Ready/Not Ready* indicator light becoming GREEN with the vent RED LED still lighted. The vent valve remains open until **[VENT]** is pressed again, another direct pressure control key is pressed, or an automated pressure control command is given from the PPC3-7M-AF front panel or by the PG7601-AF AutoGen function.

Pressing the **[△]** and **[▽]** direct pressure control keys causes the pressure to jog or step by a fixed amount. During active pressure control, they cause the target pressure to be changed by the fixed amount. One press causes one step. The approximate value of the step is set automatically depending on the current active PPC3 range. The value can be adjusted using **[SETUP]**, **<3jog>** or pressing both the up and down jog keys simultaneously. The **[△]** and **[▽]** keys are not normally used when PPC3-7M-AF is part of a PG7601-SYS-AF system.

원문: Fluke Calibration PG7601 메뉴얼(영문) · 제조사 원문 자료입니다. 사양은 제조사 사정에 따라 변경될 수 있습니다.

Before using the PPC3-7M-AF pressure controller direct pressure control keys, be sure that the PG7601-AF platform AutoGen function is OFF or not active. The AutoGen function can be made inactive by pressing [ESCAPE] on the PG Terminal.

When using PPC3-7M-AF for direct pressure control, do not make any other changes or adjustments. Do not change units of measure ([UNIT]) or measurement mode ([MODE]).

4.2.2.3 MAIN RUN SCREEN

In typical PG7601-SYS-AF system operation, the PPC3-7M-AF pressure controller keypad is not used. Occasionally, when using manual pressure control (see Section 4.1.2), [ENT/SET P] may be used to set a pressure.

The PPC3-7M-AF pressure controller MAIN run screen is its home display that is reached on power-up and from which other functions and menus are accessed. It is the very top level of all menu structures.

The MAIN run screen is where the operator works with PPC3-7M-AF pressure controller to set and read pressures. It provides complete information on the system's current configuration and operating status.

Figure 21 and its legend table summarize the PPC3 MAIN run screen fields and their functions.

PPC3 has a screen saver function which causes the display to dim if no key is pressed for 10 minutes. Pressing a key restores full power to the display. The screen saver time can be changed or screen saving can be completely suppressed (use [SPECIAL], <5prefs>, <1ScrSav> from the PPC3-7M-AF front panel).

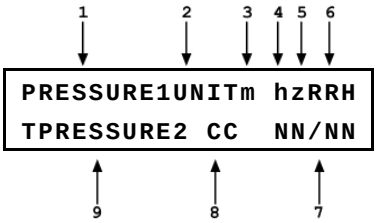

DISPLAY FIELD	NAME	PURPOSE	CONTENTS
1. PRESSURE1	Measured pressure	Displays pressure measured by PPC3-7M-AF internal utility sensor	Numerical pressure value and sign
2. UNIT	Unit of measure	Identifies pressure unit of measure in which PRESSURE1 and PRESSURE2 are displayed	Pressure unit of measure abbreviation
3. m	Measurement mode	Identifies measurement mode of displayed pressure	**<a>**: absolute **<g>**: gauge

© 2008 DH Instruments, a Fluke Company

원문: Fluke Calibration PG7601 메뉴얼(영문) · 제조사 원문 자료입니다. 사양은 제조사 사정에 따라 변경될 수 있습니다.

we measure, we calibrate, we validate.
KOLAS 국제공인교정기관 · ISO/IEC 17025

DISPLAY FIELD	NAME	PURPOSE	CONTENTS
4. h	Head pressure indicator	Indicates whether a fluid head correction is applied to PRESSURE1	**<h>**: the fluid head is not zero **<blank>**: fluid head is zero
5. z	AutoZero indicator	Indicates whether the AutoZero function is ON or OFF	**<z>**: AutoZ is ON **<blank>**: AutoZ is OFF
6. RRH	Active RPT position indicator	Indicates the position of the active utility sensor. Normally **<IuH>** when used in PG7601-SYS-AF	**<IH>**: Internal Hi **<IuH>**: Internal Hi (utility sensor) **<X1H>**: External 1 Hi **<X1L>**: External 1 Lo **<X2H>**: External 2 Hi **<X2L>**: External 2 Lo
7. NN/NN (not used in normal PG7601-SYS-AF operation)	Sequence progress indicator	Indicates progress of an ATest sequence, during test execution	**<NN/NN>**: Number of this point over total number of points in the sequence
8. CC	Pressure control indicator	Indicates type of pressure control, whether control is currently active and whether custom control limits are in use. Normally **<D>** when used in PG7601-SYS-AF	**<D>**: Control mode is dynamic **<S>**: Control mode is static **<C>** is appended to the **<D>** or **<S>** if control limits are custom Control character(s) flash if PPC3 is actively controlling
9. TPRESSURE2	Pressure information indicatior	Pressure indication depending on current PPC3 function. Leading character identifies the value.	**<R>**: Pressure rate of change in current pressure unit/second **<T>**: Pressure control target **<D>**: Deviation from the pressure control target

Figure 21. Pressure controller MAIN run screen display fields

4.2.2.4 SOUNDS

PPC3 is equipped with a variable frequency tone device to provide audible feedback and alarms. The beeper is used for the following indications.

Valid key press	Brief beep. Choice between three frequencies or NO sound is available.
Invalid key press	Descending two tone “blurp”.
Leak check completed	Three two second beeps.
Upper or lower limit exceeded	Intermittent one second beeps.
Pmax! (overpressure limit) exceeded	Eight second high frequency beep.

원문: Fluke Calibration PG7601 메뉴얼(영문) · 제조사 원문 자료입니다. 사양은 제조사 사정에 따라 변경될 수 있습니다.

4.3 DIRECT FUNCTION KEYS

4.3.1 DIRECT FUNCTION KEYS SUMMARY

Local operator interface with the PG7601-SYS-AF system is provided by the PG Terminal keypad and display. To minimize the use of multi-layered menu structures, the keypad's numerical keys also provide direct access to the most commonly used functions. The function accessed is labeled on the bottom half of the each key. Direct function keys are active whenever PG7601-AF is in a run screen (MAIN, SYSTEM or AMBIENT). Table 10 summarizes the operation of the direct function keys. Section 4.2.1.3 provides a flow chart of PG Terminal general operation. See corresponding manual Sections to 4.3.2 to 4.3.13.

It may be useful to keep a copy of Table 10 near the PG7601-AF, especially when first becoming acquainted with its operation.

Table 10. Summary of PG7601-AF PG Terminal direct function key operations

DIRECT FUNCTION KEYS ARE ACTIVE FROM ANY RUN SCREEN (main, ambient, system). See corresponding manual sections for full detail.			
0 SPECIAL	Menu of less frequently used internal functions and settings including resets, user preferences, internal calibration and remote interface setup.	3 RES	Set the resolution of PG7601-AF mass loading commands (0.01 g to 0.1 kg).
. SETUP	Edit and select files that determine the sources of the values for the variables PG7601-AF uses in calculations of reference pressures.	4 SYSTEM	Access SYSTEM run screens (2) which display current measurements of piston behavior, piston-cylinder temperature and reference vacuum if present. Toggles between the two screens.
← P OR M	Select pressure to mass or mass to pressure operation.	5 AMBIENT	Access AMBIENT run screen which displays current values of barometric pressure, ambient temperature, ambient humidity and local gravity as specified in the active SETUP file.
→ ↻	Activate motorized piston rotation acceleration and deceleration manually.	6 HEAD	Adjust height of DUT fluid head correction. Set to zero to defeat head correction.
ENTER SET P	From a run screen: Access mass or pressure setting command. From other screens: select menu choice, enter value, confirm selection.	7 P-C	View available piston-cylinder modules (range) and select active one.
1 ROTATE	Turn automatic activation of motorized rotation ON/OFF.	8 UNIT	Set unit of measure in which pressure is defined. Choice of units available from this key can be customized.
2 GEN	Turn automated pressure generation/control ON/OFF, adjust control parameters, set upper limit for automated pressure control.	9 MODE	Set pressure measurement mode (gauge, absolute).

4.3.2 [P-C], VIEW AND SELECT PISTON-CYLINDER MODULES

❍ PURPOSE

To view and/or change the active piston-cylinder module. Changing the piston-cylinder module is equivalent to changing the range.

© 2008 DH Instruments, a Fluke Company

원문: Fluke Calibration PG7601 메뉴얼(영문) · 제조사 원문 자료입니다. 사양은 제조사 사정에 따라 변경될 수 있습니다.

TS-TL-FLK-094

we measure, we calibrate, we validate.
KOLAS 국제공인교정기관 · ISO/IEC 17025

[P-C] is for selecting the active piston-cylinder module only. Piston-cylinder modules can be added and deleted and their characteristics can be edited by pressing [SPECIAL], <1PC/MS> (see Section 4.5.1).

The active mass set and mass loading bell are selected by pressing [SPECIAL], <1PC/MS> (see Section 4.5.1).

❍ PRINCIPLE

To make valid pressure and mass load calculations, PG7601-AF must know the exact characteristics of the piston-cylinder module that is currently in use. See Section 9.2.1 for detailed information on PG7601-AF pressure and mass calculations.

Most PG7601-AFs are used with more than one piston-cylinder module. Detailed characteristics on up to 18 piston-cylinder modules can be stored in digital identification records (digital IDs). Digital IDs can be added, viewed, edited and deleted locally using **[SPECIAL]**, **<1pc/ms>** (see Section 4.5.1) or remotely using **CalTool for PG7000** software.

The P-C function provides rapid access, from any run screen, to viewing the piston-cylinder modules available and selecting one to be active.

❍ OPERATION

Pres **[P-C]** to activate the piston-cylinder module viewing and selecting function. Press **[P-C]** again or **[+/-]** while in the P-C function to step through displays of available piston-cylinder modules.

When **[P-C]** is first pressed, a summary of the characteristics of the active piston-cylinder module is displayed, for example:

1. Nominal pressure to mass conversion coefficient of the piston-cylinder module that is currently selected (active). This value is calculated from the effective area of the piston-cylinder and is always in kPa/kg.
2. Serial number of the active piston-cylinder module.
3. Current pressure unit of measure.
4. Nominal pressure in current pressure units resulting from loading all the mass of the active mass set.
5. Nominal pressure in current pressure units resulting from loading the piston and mass bell only.

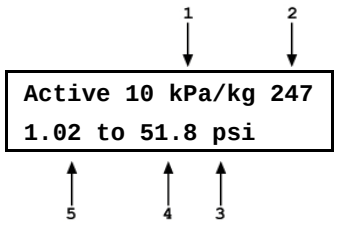

Pressing **[P-C]** again or **[+/-]** causes the screen to step through the other available piston-cylinder modules in the sequence that they were added.

1. Nominal pressure to mass conversion coefficient of the piston-cylinder module. This value is calculated from the effective area of the piston-cylinder and is always in kPa/kg.
2. Serial number of the piston-cylinder module.
3. Current pressure unit of measure.
4. Nominal maximum pressure using the piston-cylinder module. Pressure, in current pressure units, resulting from loading all the mass of the active mass set.
5. Nominal minimum pressure using the piston-cylinder module. Pressure, in current pressure units, resulting from loading the piston and mass bell only.

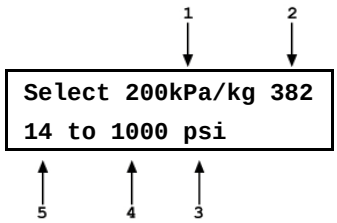

Pressing **[ENTER]** while in the P-C function causes PG7601-AF to select the currently displayed piston-cylinder module as the active piston-cylinder module.

원문: Fluke Calibration PG7601 메뉴얼(영문) · 제조사 원문 자료입니다. 사양은 제조사 사정에 따라 변경될 수 있습니다.

TS-TL-FLK-094

we measure, we calibrate, we validate.
㈜테솔 · www.tessol.com TS-TL-FLK-094 68 / 234
KOLAS 국제공인교정기관 · ISO/IEC 17025

Pressing **[ESCAPE]** while in the P-C function returns to the MAIN run screen without changing piston-cylinder modules.

The pressure unit of measure in which the range offered by the piston-cylinder module using the active mass set is displayed can be changed by pressing [UNIT] (see Section 4.3.3).

When the current pressure unit of measure is an altitude unit, piston-cylinder module range is expressed in kPa if the altitude unit is meters (m) or psi if the altitude unit is feet (ft).

4.3.3 [UNIT], SELECT PRESSURE UNIT OF MEASURE

❍ PURPOSE

To specify the unit of measure in which pressure defined by the PG7601-AF and other pressure values are expressed.

❍ PRINCIPLE

PG7601-AF supports a wide variety of pressure units of measure. Internally, PG7601-AF always operates in Pascal [Pa] (the SI unit of pressure). Values of pressure are represented in other units by the application of conversion factors to convert from Pascal. See Section 9.1.1 for unit of measure conversions.

The pressure unit of measure selection (e.g., psi, kPa, etc.) is separate from the pressure measurement mode selection (gauge, absolute). See Section 4.3.4 for information on changing the measurement mode.

❍ OPERATION

To change the pressure unit of measure, press the **[UNIT]** function key from any run screen. The display is:

```
1psi 2kPa 3inHg
4mmHg 5inWa 6ft
```

The cursor is on the number corresponding to the active unit. To change the unit, select the desired unit. The display returns to the previous run screen with the selected unit active.

If the pressure unit selected is inWa, the reference temperature for water density must be specified. When inWa is selected as the unit, the next display is:

```
Select inWa ref temp
4°C     20°C     60°F
```

Select the desired reference temperature for water density using **[←]** or **[→]** to move the cursor. Pressing **[ENTER]** returns to the MAIN run screen with inWa based on water density at the selected reference temperature as the active pressure unit. The current inWa reference temperature can be viewed by observing the position of the cursor in the reference temperature screen.

See Section 9.1 for tables of the pressure unit of measure conversion factors used by PG7601-AF.

© 2008 DH Instruments, a Fluke Company

원문: Fluke Calibration PG7601 메뉴얼(영문) · 제조사 원문 자료입니다. 사양은 제조사 사정에 따라 변경될 수 있습니다.

TS-TL-FLK-094

we measure, we calibrate, we validate.
KOLAS 국제공인교정기관 · ISO/IEC 17025
㈜테솔 · www.tessol.com TS-TL-FLK-094 69 / 234

The UNIT function provides rapid access to a choice of up to six units. The choice of units can be customized from a wider selection by the user (see Section 4.5.2). The default units are:

1psi 2kPa 3inHg 4mmHgr 5inWa 6ft

To restore the default UNIT function settings, use the Unit Reset (see Section 4.5.9.2).

Certain internal and/or metrological functions (e.g., vacuum reference pressure) are always represented in Pascal [Pa], regardless of the active pressure unit of measure.

When the current pressure unit of measure is an altitude unit, atmospheric pressure in the AMBIENT run screen is expressed in kPa if the altitude unit is meters (m) or psi if the altitude unit is feet (ft).

4.3.4 [MODE], SELECT PRESSURE MEASUREMENT MODE

PURPOSE

To specify the measurement mode (gauge, absolute) in which PG7601-AF defines reference pressures.

Pressure measurement mode and unit of measure is not the same thing. See Section 4.3.3 for information on the pressure unit of measure.

PRINCIPLE

Pressure defined relative to absolute zero or vacuum is generally referred to as *absolute pressure*.

Pressure defined relative to atmospheric pressure is generally referred to as *gauge pressure*.

PG7601-AF can define absolute and gauge pressure. These are referred to as measurement *modes*.

The specific PG7601-AF measurement modes are as follows:

- ***gauge***: Defines gauge pressure by leaving the PG7601-AF mass load open to atmosphere. It does not allow negative gauge pressures. The minimum gauge pressure is the pressure resulting from loading the combined mass of the piston and the bell on piston-cylinder effective area.
- ***absolute by vacuum (absolute by vac)***: Defines absolute pressure by measuring relative to an evacuated bell jar. This mode is time consuming as the vacuum under the bell jar must be made and broken to adjust the mass load for each pressure to be set. This mode is required for setting absolute pressures under atmospheric pressure.
- ***absolute by adding atmospheric pressure (absolute by ATM)***: Defines absolute pressure by defining a pressure in the same manner as in *gauge mode* and adding the value of atmospheric pressure measured by a barometer. The barometer can be PG7601-AF's on-board sensor or a remote RS232 barometer (not included in standard PG7601-SYS-AF system). The uncertainty on the value of atmospheric pressure measured by the barometer must be considered but this value can become relatively small as pressure goes up. For example, if using a ± 0.01 % barometer, the added uncertainty at 1 MPa (150 psi) is 10 ppm.

  This mode is more convenient than *absolute by vacuum* since no vacuum reference needs to be established. However, it does not allow absolute pressures under atmosphere and the minimum absolute pressure is atmospheric pressure plus the pressure

원문: Fluke Calibration PG7601 메뉴얼(영문) · 제조사 원문 자료입니다. 사양은 제조사 사정에 따라 변경될 수 있습니다.

resulting from loading the combined mass of the piston and the bell on the piston-cylinder effective area.

❍ **OPERATION**

To change the pressure measurement mode, press **[MODE]** from any run screen.

The display is:

```
Measurement mode:
1g 2avac 3aatm
```

The cursor is on the number corresponding to the current measurement mode.

Selecting **<1g>** accesses *gauge* mode.

Selecting **<2avac>** accesses *absolute by vacuum* mode.

Selecting **<3aatm>** accesses *absolute by ATM* mode.

Making a measurement mode selection returns to the previous run screen with the selected mode active.

4.3.5 [SYSTEM], VIEW SYSTEM CONDITIONS MEASUREMENT SCREENS

❍ **PURPOSE**

To access the two SYSTEM run screens which display current values of PG7601-AF piston behavior, piston-cylinder temperature and vacuum reference measurements.

❍ **OPERATION**

To access the SYSTEM run screens, press **[SYSTEM]** from any other run screen. There are two SYSTEM run screens. Pressing **[SYSTEM]** or **[±]** when in a SYSTEM screen toggles between the first and second SYSTEM screens.

See Sections 4.3.5.1 and 4.3.5.2 for detailed information on the contents of the first and second SYSTEM run screens.

The SYSTEM screens are run screens. This means that other functions can be accessed from the SYSTEM screens and the active SYSTEM screen will be returned to when leaving functions. The MAIN screen and AMBIENT screen are also run screens (see Section 4.2.1.3).

4.3.5.1 FIRST SYSTEM RUN SCREEN

❍ **OPERATION**

The first SYSTEM run screen provides real time display of piston rotation rate, decay in piston rotation rate, piston position and piston fall rate.

To access the first SYSTEM run screen, press **[SYSTEM]** from any other run screen.

© 2008 DH Instruments, a Fluke Company

원문: Fluke Calibration PG7601 메뉴얼(영문) · 제조사 원문 자료입니다. 사양은 제조사 사정에 따라 변경될 수 있습니다.

we measure, we calibrate, we validate.
KOLAS 국제공인교정기관 · ISO/IEC 17025

The first SYSTEM run screen displays:

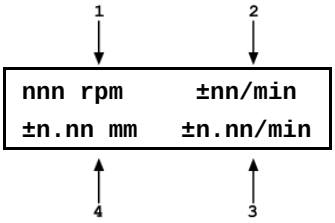

1. **<nnn rpm>**: Numerical value of current piston rate of rotation. The unit of measure is rotations per minute [rpm] and cannot be changed. Flashes when *Not Ready* and piston is floating (see Section 4.1.3.2). Indicates **< ---- >** when information is unavailable or out of range. Message indicating piston rotation is being accelerated or decelerated is displayed to the right when motorized rotation is engaged.
2. **<±nn/min>:** Numerical value of current decay in piston rotation rate (deceleration). The unit of measure is rotations per minute [rpm/min] and cannot be changed. **< ---- >** when information is unavailable or out of range. Message indicating piston rotation is being accelerated or decelerated is displayed here when motorized rotation is engaged.
3. **<±n.nn/min>:** Sign and numerical value of current piston vertical rate of displacement. A negative value indicates piston falling. A positive value indicates piston rising. The unit of measure is millimeters per minute [mm/min] and cannot be changed. Indicates **< ---- >** when information is unavailable or out of range.
4. **<±n.nn mm>:** Sign and numerical value of current position of the piston within the piston stroke (see Section 4.1.4) relative to the mid-stroke position. The unit of measure is millimeters [mm] and cannot be changed. Indicates **<HSTOP>** when the piston is at the high stop (all the way up) and **<LSTOP>** when the piston is at the low stop (all the way down). Flashes when *Not Ready* and piston is floating (see Section 4.1.3.1). Indicates **< ---- >** when information is unavailable or out of range.

Pressing **[ESCAPE]** in the first SYSTEM run screen returns operation to the MAIN run screen. Pressing **[SYSTEM]** or **[±]** toggles between the first and second run screen. All function keys are active from the first SYSTEM run screen and operation returns to that screen when leaving functions the were accessed from it.

The measurement systems for piston behavior indications rely on movement of the mass loading bell. Piston behavior indications (piston position, piston rotation rate) are not valid when the mass bell is not loaded on the piston.

See Section 4.1.4 for information on the piston stroke and measurement zone.

4.3.5.2 SECOND SYSTEM RUN SCREEN

❍ OPERATION

The second SYSTEM run screen displays the values of piston-cylinder temperature and temperature rate of change. Vacuum and vacuum rate of change are also displayed. If internal or external measurement is specified for the vacuum values in SETUP (see Section 4.4), the second SYSTEM run screen provides a real time display of the values measured.

To access the second SYSTEM run screen, press **[SYSTEM]** or **[±]** from the first SYSTEM run screen. To access the first SYSTEM run screen, press **[SYSTEM]** from any run screen.

원문: Fluke Calibration PG7601 메뉴얼(영문) · 제조사 원문 자료입니다. 사양은 제조사 사정에 따라 변경될 수 있습니다.

we measure, we calibrate, we validate.
㈜테솔 · www.tessol.com TS-TL-FLK-094 72 / 234
KOLAS 국제공인교정기관 · ISO/IEC 17025

TS-TL-FLK-094

The second SYSTEM run screen displays:

1. **<n.nn°C>:** Current piston-cylinder temperature. Source of value can be internal measurement, default or user depending on current SETUP selection (see Section 4.4). The unit of measure is degrees Centigrade **[±°C]** and cannot be changed. Indicates **< ---- >** when information is unavailable or out of range.

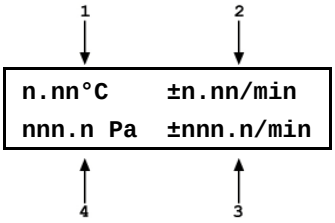

2. **<+n.nn/min>:** Sign and numerical value of current rate of change of temperature. A negative value indicates temperature decreasing. A positive value indicates temperature increasing. The unit of measure is degrees Centigrade per minute **[°C/min]** and cannot be changed. Indicates **< ---- >** when information is unavailable or out of range. Indicates **< ---- >** when "user" or "default" is the current SETUP selection for piston-cylinder temperature source (see Section 4.4).
3. **<+nnn.n/min>:** Sign and numerical value of current rate of change of the vacuum reference pressure. A negative value indicates pressure decreasing. A positive value indicates pressure increasing. The unit of measure is Pascal per minute **[Pa/min]** and cannot be changed. Indicates **< ---- >** when information is unavailable or out of range. **<Blank>** if the PG7601-AF model is not PG7601-AF or if user or default is the current SETUP selection for reference vacuum (see Section 4.4).
4. **<nnn.n Pa>:** Current vacuum reference value. Can be internal measurement, external measurement, default or user depending on current SETUP selection. Flashes when *Not Ready* and piston is floating (see Section 4.1.3.3). The unit of measure is Pascal **[Pa]** and cannot be changed. Indicates **< >20 Pa >** if current SETUP selection is internal or external and current measurement is out of range or greater than 20 Pascal. **<Blank>** if PG7601-AF model is not PG7601.

Pressing **[ESCAPE]** in the second SYSTEM run screen returns operation to the MAIN run screen. Pressing **[SYSTEM]** or **[±]** toggles between the first and second SYSTEM run screen. All function keys are active from the second SYSTEM run screen and operation returns to that screen when leaving functions that were accessed from it.

The current selection in SETUP determines the source of the values used by PG7601-AF for piston-cylinder temperature and vacuum reference values (see Section 4.4). If the SETUP setting is user or default, the SYSTEM screen displays the user or default value, not PG7601-AF's on-board measurement(s).

4.3.6 [AMBIENT], VIEW AMBIENT CONDITIONS MEASUREMENTS SCREEN

❍ PURPOSE

Access the AMBIENT run screen which displays the current ambient condition values being used by PG7601-AF for calculations of reference pressure.

❍ PRINCIPLE

PG7601-AF uses ambient condition values to calculate the reference pressures that it defines (see 9.2.1). The source of the ambient condition values is specified in the current SETUP file (see Section 4.4). The AMBIENT run screen displays the current ambient condition values. If the SETUP selection for the ambient condition is internal measurement, then the AMBIENT run screen provides a real time display of the measurement by PG7601-AF's on-board sensor for that variable.

© 2008 DH Instruments, a Fluke Company

원문: Fluke Calibration PG7601 메뉴얼(영문) · 제조사 원문 자료입니다. 사양은 제조사 사정에 따라 변경될 수 있습니다.

we measure, we calibrate, we validate.
KOLAS 국제공인교정기관 · ISO/IEC 17025

OPERATION

To access the AMBIENT run screen, press **[AMBIENT]** from any other run screen (MAIN or SYSTEM).

The AMBIENT screen is a run screen. This means that other functions can be accessed from the AMBIENT screen and the active AMBIENT screen will be returned to when leaving functions. The MAIN screen and SYSTEM screens are also run screens (see Sections 4.2.1.2 and 4.3.5)

The AMBIENT run screen displays:

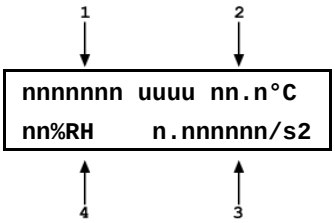

1. **<nnnnnnn uuuu>:** Current numerical value and pressure unit of atmospheric pressure. Source of value can be internal measurement, remote barometer, default or user depending on current SETUP selection (see Section 4.4). The unit of measure is determined by the UNIT function setting (see Section 4.3.3). ATM head is applied to internal or external barometer reading to correct atmospheric pressure to the PG7601-AF reference level (see Section 9.2.2.1). Indicates **< ---- >** when information is unavailable or out of range. Indicates **<TIMEOUT>** if the current SETUP selection is a remote barometer and PG7601-AF communication with the barometer times out.
2. **<n.nn°C>:** Current ambient temperature. Source of value can be internal measurement, default or user depending on current SETUP selection (see Section 4.4). The unit of measure is degrees Centigrade [ºC] and cannot be changed. Indicates **< ---- >** when information is unavailable or out of range.
3. **<n.nnnnnnm/s2>:** Value of local acceleration due to gravity. Can be default or user depending on current SETUP selection (see Section 4.4). The unit of measure is meters per second squared [m/s2] and cannot be changed.
4. **<nn%RH>:** Current ambient relative humidity. Can be internal measurement, default or user depending on current SETUP selection (see Section 4.4). The unit of measure is percent relative humidity [%RH] and cannot be changed. Indicates **< -- >** if current SETUP selection is internal and current measurement is unavailable or out of range.

Pressing **[ESCAPE]** in the AMBIENT run screen returns operation to the MAIN run screen. All function keys are active from the AMBIENT run screen and operation returns to that screen when leaving functions that were accessed from it.

The current selection in SETUP determines the source of the values used by PG7601-AF for atmospheric pressure, ambient temperature and relative humidity. If the SETUP setting for these values is user or default, the AMBIENT screen displays the user or default value, not PG7601-AF's on-board measurement(s).

To change the ambient pressure unit of measure, see Section 4.3.3. When the current pressure unit of measure is an altitude unit, atmospheric pressure in the AMBIENT run screen is expressed in kPa if the altitude unit is meters (m) or psi if the altitude unit is feet (ft).

4.3.7 [HEAD], SET FLUID HEAD CORRECTION HEIGHT

PURPOSE

To cause a pressure value, representing the fluid head resulting from a difference in height, to be added to the pressure defined by PG7601-AF at its reference level. To set the height of the DUT head.

PRINCIPLE

The pressure defined by the PG7601-AF's floating piston is the pressure at the bottom of the piston. This is referred to as the PG7601-AF reference level. The height of the bottom of the piston with the piston in mid-stroke position is marked ***reference level*** on the PG7601-AF piston-cylinder module mounting post. Frequently, when performing a calibration or test, the

원문: Fluke Calibration PG7601 메뉴얼(영문) · 제조사 원문 자료입니다. 사양은 제조사 사정에 따라 변경될 수 있습니다.

device or system under test is at a different height than the PG7601-AF reference level. This difference in height (referred to as **DUT head**) can cause a significant difference between the pressure defined by the PG7601-AF at its reference level and the pressure actually applied to the device under test located at a different height. In this case, it is useful to make a head correction to the pressure defined by the PG7601-AF at its reference level in order to accurately predict the pressure actually applied at a different height. The HEAD function allows this head correction to be applied automatically based on operator entry of the height difference. The fluid used and the HEAD function unit of measure are set using **[SPECIAL]**, **<3head>** (see Section 4.5.3).

PG7601-AF can accurately determine **head** pressures for gases (nitrogen, helium and air) and liquids (Di-2 ethylhexyl Sebacate oil, water and a user defined liquid) as the pressurized medium. A liquid head might be useful if the PG7601-AF is used with a gas/liquid interface.

When gas is the test fluid, use of the HEAD function is most important at low absolute pressures. In this case, specifying the head height within ± 0.2 in. (5 mm) is adequate to ensure that, even in the worst case, the uncertainty on the head correction will be insignificant relative to the tolerance on the PG7601-AF measurement. Use of the HEAD function to ensure in tolerance measurements is particularly critical when a liquid is the test fluid, due to the high density of liquids. To determine when and how precisely a head correction for liquids must be made, 0.03 psi/inch (90 Pa/cm) may be used as an estimation of the liquid head value.

Regardless of the DUT head function's setting, corrections are automatically applied to the calculated reference pressure to compensate for the deviation between the current piston position and the mid-stroke position (see Section 4.5.3).

The pistons of the 10 kPa/kg and 50 kPa/kg piston-cylinder modules are hollow. Therefore, the natural reference level is not at the bottom of the piston. So that, in practice, the actual reference level is the same for all piston-cylinder modules, a reference level offset is applied when a hollow piston is used. The reference level offset is included in the piston-cylinder digital ID (see Section 4.5.1.1) and corrects the reference level back to the reference point marked on the mounting post.

❍ OPERATION

To access the HEAD function, press **[HEAD]**. The display is:

```
Edit DUT head height
95 cm          N2
```

2 1

1. Test fluid currently specified for the head correction.
2. Entry field for head height (1 to 999 cm or in.).

Entering a value of zero turns the HEAD function OFF. Entering a value other than zero turns the HEAD function ON using the height entered. Pressing **[ESCAPE]** returns to the MAIN run screen with NO change to the current head setting. A separate function in **[SPECIAL]** is used to change the head fluid or height unit (see Section 4.5.3).

© 2008 DH Instruments, a Fluke Company

원문: Fluke Calibration PG7601 메뉴얼(영문) · 제조사 원문 자료입니다. 사양은 제조사 사정에 따라 변경될 수 있습니다.

TS-TL-FLK-094

we measure, we calibrate, we validate.
KOLAS 국제공인교정기관 · ISO/IEC 17025

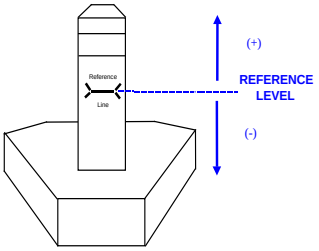

The reference height of PG7601-AF pressure definition is the bottom of the piston in mid-stroke float position. This position is marked on the piston-cylinder module mounting post. The DUT head height should be entered as a positive value if the device or system under test is higher than the PG7601-AF reference level and negative if it is lower.

To change units of DUT head height between inches and centimeters and to change the test fluid, use [SPECIAL], <3Head> (see Section 4.5.3).

When the HEAD function is ON (DUT head value different from 0), the application of a head correction is indicated by <h> in the right side of the top line of the MAIN run screen (see Section 4.2.1.2). When the HEAD function is OFF, the <h> is NOT shown. PG7601-AF also has a separate head correction to compensate for the deviation between the current piston position and mid-stroke (see Section 4.5.3). This PISTON head can be turned ON and OFF.

4.3.8 [ROTATE], MANAGE MOTORIZED PISTON ROTATION

❍ PURPOSE

To turn **automatic** control of motorized piston rotation (acceleration and deceleration) ON and OFF.

See Section 4.3.13 for information on manual control of motorized piston rotation.

❍ PRINCIPLE

The motorized piston rotation system is used to start or increase piston rotation rate when the piston is floating. It is also used to stop piston rotation when necessary, for example before manipulating mass to set a new pressure moving the piston to the end of its stroke. The system operates by engaging a motor driven belt around the bottom of the mass loading bell to accelerate or brake the rotation rate of the mass bell and piston it is loaded on. The motorized rotation system can engage with the piston at any position in its stroke and at any rotation speed with minimal impact on piston position and the defined pressure. When the motorized rotation system disengages, the piston is completely free.

With automatic motorized rotation ON, the motorized rotation system engages and disengages automatically as needed when the piston is floating to maintain the piston rotation rate above the minimum rate *Ready* limit (see Section 4.1.3.2). The rotation rate is measured by PG7601-AF on board sensors and the rotation rate limits are set in the digital ID of the active piston cylinder (see Section 4.5.1.1). Whenever the piston is floating, the motorized rotation system will attempt to maintain the piston rotation rate within the *Ready* limits (except under the cutoff mass load of 3 kg where the low rotation limit becomes 5 rpm). The piston rotation *Ready/Not Ready* indication character indicates *Not Ready* to alert the operator when

원문: Fluke Calibration PG7601 메뉴얼(영문) · 제조사 원문 자료입니다. 사양은 제조사 사정에 따라 변경될 수 있습니다.

we measure, we calibrate, we validate.
㈜테솔 · www.tessol.com TS-TL-FLK-094 76 / 234
KOLAS 국제공인교정기관 · ISO/IEC 17025

TESSOL Technical Library
TS-TL-FLK-094

the motorized rotation system is about to engage. The rotation system will not engage when the current mass load is less than the mass of the piston + mass loading bell.

The motorized rotation system is also used to decelerate and stop rotation when starting a new pressure point. If the piston is floating and rotating when **[ENTER/SET P]** is pressed, the motorized rotation system engages at a speed near the rotation rate of the piston and then brakes it to a stop. Piston rotation is stopped to avoid loading and unloading masses on the rotating piston and to avoid stopping rotation by friction between the piston and the piston end of stroke stops.

With automatic motorized rotation OFF, the motorized rotation system engages only when actuated by the operator. Pressing **[↻]** accelerate rotation or **[↻]** followed by **[←]** stops rotation (see Section 4.3.13). Rotation should always be stopped before the piston is moved up or down against the end of stroke stop.

Automatic motorized rotation is generally left ON for normal operation. It is turned OFF in situations where rotation system actuation independent of operator initiative is undesired (e.g. when performing a crossfloat intercomparison with another piston gauge).

❍ OPERATION

⚠ *Piston rotation should always be stopped by the motorized rotation system or manually before the pressure is changed. Piston rotation should not be stopped by friction of the rotating piston against the upper or lower end of stroke stop.*

To access the AutoRotate functions, press **[ROTATE]**. The display is:

```
AutoRotate OFF
1on 2pre-decel
```

<AutoRotate ON> or **<AutoRotate OFF>** indicates the current state of AutoRotate. Use **<1on>** or **<1off>** to change the state.

When automated rotation is OFF, the PG7601-AF motorized rotation system will only engage if the operator presses **[↻]** or **[↻]** followed by **[←]** (see Section 4.3.13).

When automated rotation is ON, the automated rotation system engages automatically. When the piston is floating, it engages as needed to maintain the piston rotation rate within the rotation rate *Ready* limits (see Section 4.1.3.2). When **[ENTER/SET P]** is pressed, it engages to stop rotation before masses are loaded and/or the pressure is adjusted (this function can be turned ON and OFF, see Section 4.3.8.1). Manual control using **[↻]** and **[↻]** followed by **[←]** is also still active.

Automatic motorized piston rotation is dependent on PG7601-AF's measurements of piston position and rotation rate. These measurements are only available when the mass loading bell is installed on the piston. Automatic piston rotation is suspended when the current PG7601-AF mass load does not include the mass loading bell.

Proper operation of the rotation system is dependent on PG7601-AF's measurements of piston position. Be sure that the piston position indication system is properly adjusted (see Section 6.4.1).

When PG7601-AF is operating in absolute by vacuum mode using the internal vacuum sensor to measure reference vacuum, automatic motorized piston rotation will not engage until the reference vacuum value is within the Ready limit (see Section 4.1.3.3).

© 2008 DH Instruments, a Fluke Company

원문: Fluke Calibration PG7601 메뉴얼(영문) · 제조사 원문 자료입니다. 사양은 제조사 사정에 따라 변경될 수 있습니다.

TS-TL-FLK-094

we measure, we calibrate, we validate.
㈜테솔 · www.tessol.com TS-TL-FLK-094 77 / 234
KOLAS 국제공인교정기관 · ISO/IEC 17025

4.3.8.1 <2PRE-DECEL>

❍ PURPOSE

To turn ON and OFF a function that causes the automated rotation system to begin the piston rotation deceleration when **[ENTER/SET P]** is pressed rather than at the time mass is to be loaded.

On a PG7601-AF platform equipped with motorized rotation, when AutoRotate is on, the piston rotation deceleration function is used to stop rotation before masses are loaded or pressure is adjusted. As the deceleration function can take up to one minute to execute, it can be initiated the moment that **[ENTER/SET P]** is pressed to enter a new pressure or mass target. The deceleration function then runs while the new target value is being entered. However, when the next target does not require changing main masses, it may not be necessary to stop piston rotation. In these cases, running the deceleration function is probably not desired and it is not beneficial for piston deceleration to initiate when **[ENTER/SET P]** is pressed. For this reason, the function to start piston deceleratoin when **[ENTER/SET P]** is pressed can be turned ON and OFF.

If pre-deceleration is ON and AutoRotate is ON, piston rotation deceleration always initiates immediately when **[ENTER/SET P]** is pressed.

If pre-deceleratoin is OFF and AutoRotate is ON, piston rotation deceleration occurs after entry of the pressure or mass target value and only if the new target requires changing main masses.

❍ OPERATION

To turn ON and OFF the function that causes stopping piston rotation to initiate when **[ENTER/SET P]** is pressed, press **[ROTATE]**, **<2pre-decel>**. The cursor is on the choice corresponding to the current state. Select **<2on>** for piston rotation deceleration to initiate when **[ENTER/SET P]** is pressed. Select **<1off>** for deceleration to initiate only after entry of a new pressure or mass target and only if main masses need to be moved. The default is **<2on>**.

4.3.9 [GEN], MANAGE AUTOMATED PRESSURE GENERATION

❍ PURPOSE

To turn ON and OFF automated pressure control and view and edit automated pressure control settings. Requires that an automated pressure control component be included in the PG7601-AF system and properly configured.

❍ PRINCIPLE

A PG7601-SYS-AF system includes a PPC3-7M-AF automated pressure controller. The controller, when properly configured and interfaced with PG7601-AF, is controlled by PG7601-AF to automatically set and adjust pressure to float the piston. The PPC3-7M-AF controller is interfaced via PG7601-AF's COM3 RS232 port (see Section 3.3.2).

With the PPC3-7M-AF properly configured and interfaced with PG7601-AF, the functions under **[GEN]** are used to turn automated pressure generation/control ON and OFF and to set operating parameters associated with automated pressure control.

With automated pressure generation/control ON, PG7601-AF uses the automated control component to float and refloat its piston when a pressure or mass value is entered. **[ENTER/SET P]** is pressed to initiate a new command. The automated control function is suspended when any function key is pressed, when entering remote mode or if automated pressure control is turned OFF.

After a target pressure or mass has been entered (locally or remotely) and the required mass has been loaded, the GEN function controls the pressure control component as needed to float the PG7601-AF piston at the piston float target (see Section 4.3.9.1). When the target

원문: Fluke Calibration PG7601 메뉴얼(영문) · 제조사 원문 자료입니다. 사양은 제조사 사정에 따라 변경될 수 있습니다.

value has been exceeded, pressure control stops so that the pressure is controlled only by the floating piston without interference from the pressure controller. When the piston moves beyond the high or low piston position ready limit (see Section 4.1.3.1), the GEN function refloats it to the piston float target. The piston float target and piston position ready limits are user adjustable. See Section 4.1.4, Figure 15 for a description piston position stroke zones and limits.

With automated pressure generation/control OFF, PG7601-AF leaves the automated pressure generation/control component idle and does not attempt to use it. In this case pressure can be controlled manually by the operator from the PPC3-7M-AF front panel.

For normal operation, automated pressure control is generally left ON. It is turned OFF in situations where pressure control independent of operator initiative is undesired (e.g. when performing a crossfloat intercomparison with another piston gauge).

The **[GEN]** menu also includes the adjustable piston float target that defines the position to which the piston is set when floated (see Section 4.3.9.1); viewing and setting the UPPER LIMIT of the automated pressure generation component to avoid accidental overpressure (see Section 4.3.9.3), viewing and setting the assumed pressure controller tolerance used to determine pressure setting limits when floating the PG7601-AF piston (see Section 4.3.9.4), a choice to not readjust piston position if the piston is already floating within the *Ready* limit after a new target is executed (see Section 4.3.9.5).

❍ **OPERATION**

To access the GEN functions, press **[GEN]**. The display is:

```
AutoGen OFF     1on
2target 3raise 4UL ↓
5tol 6refloat
```

<AutoGen ON> or **<AutoGen OFF>** indicates the current state of AutoGen. Use **<1on>** or **<1off>** to change the state.

If automated pressure control is OFF, when **<1on>** is pressed, PG7601-AF attempts to initialize automated pressure control. To do so, communication must be established with the PPC3-7M-AF pressure controller (see Section 4.5.5.1). If PG7601-AF is unable to establish communication with a valid pressure control component, **<P control timeout, autogen off>** is displayed momentarily. Correct the communications error with the pressure control component and try again. If PG7601-AF is able to establish communications with a valid automated pressure control component, **<Turning ON automated generation>** is displayed momentarily and automated control is turned ON. When initializing automated pressure control, PG7601-AF automatically makes the settings on the pressure control component to set it up to operate in the system (pressure unit, measurement mode, control mode, hold limit, etc.).

The PG7601-AF automated control function will attempt to float the piston within the piston position ready limits (see Section 4.1.3.1) after any *mass to pressure* or *pressure to mass* command once mass loading has been confirmed. It will continue to attempt to float its piston until **[ENTER/SET P]** is pressed to initiate a new command, a function key is pressed to interrupt AugoGen, or automated pressure control is turned OFF using **[GEN]**.

If automated pressure control is ON and **<1off>** is pressed, **<Turning OFF automated generation>** is displayed momentarily and automated control is turned OFF. The PG7601-AF automated control function is inactive.

☞ It is not necessary to turn GEN off to interrupt automated pressure control. Pressing [ESCAPE] from the main run screen while automated pressure control is active suspends automated pressure control allow manual operation. Automated pressure control will resume the next time [ENTER/SET P] is used.

☞ Automated pressure generation/control ON is indicated by a <G> in the right of the top line

© 2008 DH Instruments, a Fluke Company

원문: Fluke Calibration PG7601 메뉴얼(영문) · 제조사 원문 자료입니다. 사양은 제조사 사정에 따라 변경될 수 있습니다.

TS-TL-FLK-094

we measure, we calibrate, we validate.
KOLAS 국제공인교정기관 · ISO/IEC 17025

of the PG Terminal MAIN run screen. The <G> flashes when automated generation is active (see Section 4.2.1.2).

Proper operation of the automated pressure control function is dependent on PG7601-AF's measurements of piston position and rotation rate. These measurements are only available when the mass loading bell is installed on the piston. Automated pressure control is automatically turned off when the PG7601-AF entered pressure or mass load does not include the mass loading bell.

Proper operation of the automated pressure control function is dependent on PG7601-AF's measurements of piston position. When using AutoGen, be sure that the piston position indication system is properly adjusted (see Section 6.4.1).

To help protect against accidental overpressure, when using automated pressure generation/control, set the upper limit (UL) of the pressure control system using [GEN], <4UL> (see Section 4.3.9.3).

4.3.9.1 <2TARGET>

PURPOSE

To adjust the position to which the piston must be set before the automated generation function considers the piston floating process complete (see Sections 4.3.9, 4.1.4).

OPERATION

To adjust the AutoGen piston float target press **[GEN]**, **<2target>**. Edit the value of the target as desired. The default is + 1 mm. The entry should not exceed + 2.5 mm.

4.3.9.2 <3RAISE>

PURPOSE

This function is only used with an AMH-38 automated mass handling system. Automated mass handling is not included in the PG7601-SYS-AF system.

4.3.9.3 <4UL>

PURPOSE

To read and/or set the UPPER LIMIT (UL) of the PPC3-7M-AF pressure controller. This function is used to protect against accidental overpressure when using the PG7601-AF automated pressure generation function (see Section 4.3.9 and the PPC3 Operation and Maintenance Manual, UL section).

OPERATION

To view or set the UPPER LIMIT of the PPC3-7M-AF pressure controller used by AutoGen, press **[GEN]**, **<4UL>**.

If AutoGen is not ON, the control component UPPER LIMIT cannot be accessed and **<AutoGen OFF no UL>** is displayed.

If AutoGen is ON, the current UPPER LIMIT of the pressure conroller is displayed and can be edited.

원문: Fluke Calibration PG7601 메뉴얼(영문) · 제조사 원문 자료입니다. 사양은 제조사 사정에 따라 변경될 수 있습니다.

The pressure controller will abort pressure generation and beep repeatedly if its UPPER LIMIT is exceeded.

4.3.9.4 <5TOL>

❍ PURPOSE

To read and/or set the pressure measuring tolerance of the pressure controller used by AutoGen to automate pressure control.

The control tolerance function can be used to reduce the time required to set pressure and float the PG7601-AF piston when the pressure controller used is significantly more accurate than the default tolerance value. The tolerance can also be described as the degree of agreement between the pressure control's pressure measurement and the pressure value set by the PG7601-AF when its piston is floating. In general, making the tolerance smaller reduces the time required to float the piston and making the tolerance wider increases the time. However, if the tolerance is set too small so that it does not correctly reflect the degree of agreement between the pressure controller pressure measurement and the PG7601-AF's floating piston, overshoot of the piston float point or inability to float the piston will result.

The pressure controller tolerance determines, when applicable:

a) the distance from the actual pressure target that pressure is set before the AutoGen function begins to seek movement of the piston.

b) the amount of pressure overshoot that must occur before "forced rotation" is used to overcome possible friction between the piston and the cylinder.

❍ OPERATION

To view or set the pressure control tolerance, press **[GEN]**, **<5tol>**.

The current value of the pressure control tolerance is displayed. The value is in % of full scale of the pressure controller. If the pressure controller is AutoRanged, the AutoRange maximum pressure is used as full scale (see the PPC3 Operation and Maintenance Manual).

The default tolerance value is 0.05% of full scale. This tolerance is appropriate for the PPC3-7M-AF pressure controller's utility sensor assuming it is regularly adjusted (see Section 6.5).

Edit the tolerance value if desired. Do not make the pressure tolerance less than the worse case agreement between the pressure controller pressure measurement and the pressure indicated by the PG7601-AF when its piston is floating.

4.3.9.5 <6REFLOAT>

❍ PURPOSE

To turn ON and OFF a function that causes the automated generation component (see Section 4.3.9.) to refloat the piston to the target piston position after a new pressure or mass target is entered, even if the piston is already floating within the piston position *Ready* limits. When REFLOAT is ON, the piston is always refloated to the target piston position after a new pressure or mass target command. This gives the full stroke of the piston to drop before refloat is necessary. When REFLOAT is OFF, the time required to activate the pressure control component and refloat the piston is eliminated if it is not needed. This can result in very rapid pressure setting when the piston is still floating after a mass load change.

❍ OPERATION

To turn ON and OFF the Refloat function, press **[GEN]**, **<6refloat>**. The cursor is on the choice corresponding to the current state. Select **<1no>** for the piston NOT to be controlled to the target position after a pressure or mass command if the piston is already

© 2008 DH Instruments, a Fluke Company

원문: Fluke Calibration PG7601 메뉴얼(영문) · 제조사 원문 자료입니다. 사양은 제조사 사정에 따라 변경될 수 있습니다.

TS-TL-FLK-094

we measure, we calibrate, we validate.
㈜테솔 · www.tessol.com TS-TL-FLK-094 81 / 234
KOLAS 국제공인교정기관 · ISO/IEC 17025

in the *Ready* piston position limits. Select **<2yes>** for the piston to always to be controlled to the raise the piston. The default is **<2yes>**.

4.3.9.6 VIEWING AND SETTING PPC3-7M-AF COM1 PORT SETTINGS

❍ PURPOSE

To view and set the PPC3-7M-AF COM1 port for communication with the PG7601-AF platform.

❍ PRINCIPAL

For the PG7601-AF automated pressure control function to operate, the PG7601-AF platform must be able to communicate with the PPC3-7M-AF pressure controller. Communications are by RS232 between the PG7601-AF platform COM3 port and the PPC3-7M-AF pressure controller COM1 port. For the two components to communicate, their COM port settings must be identifical. The default settings for both COM ports are:

Baud rate 2 400

Parity EVEN

Length 7

Stop Bit 1

To view and set the PG7601-AF COM3 port settings, see Section 4.5.5.1.

To view and set the PPC3-7M-AF COM1 port settings, see OPERATION below.

❍ OPERATION

The PPC3-7M-AF COM1 port settings can be viewed and set from the PPC3-7M-AF front panel.

First, be sure the PPC3-7M-AF is ready for local operation. If the PG7601-AF AutoGen function is on, suspend it by pressing **[ESCAPE]** on the PG Terminal keypad. Then press **[ESCAPE]** on the PPC3-7M-AF front panel. Press **[SPECIAL]**, **<2remote>**, **<1COM1>**. Step through the settings, making the desired selections.

4.3.10 [RES], SET MASS LOADING RESOLUTION

❍ PURPOSE

To set the resolution with which PG7601-AF loads mass in response to pressure or mass commands (see Section 4.3.12).

❍ PRINCIPLE

PG7601-AF piston-cylinders are sized such that there is a whole number, nominal relationship between mass loaded on the piston in kilograms [kg] and the pressure at which the piston will float in kilo Pascal [kPa]. This relationship is called the *pressure to mass conversion coefficient* and is expressed as kPa/kg. The *pressure to mass conversion coefficient* is marked on the cap of each piston.

The PG7601-AF mass set is made up of masses in multiples and submultiples of the kilogram making it simple to load mass values rounded to 0.01 g, 1 g, 10 g or 0.1 kg.

When using PG7601-AF to define pressure, the desired pressure value is entered (see Section 4.3.11) and PG7601-AF prompts the user with the mass value to be loaded. Due to the many variables that influence the exact pressure to mass relationship for a piston-cylinder (even though there is nominally a whole number mass to pressure relationship) the mass value to load to reach exactly the pressure requested is always an odd value. Therefore, defining the exact pressure value requested always requires loading mass with 0.01 g resolution.

원문: Fluke Calibration PG7601 메뉴얼(영문) · 제조사 원문 자료입니다. 사양은 제조사 사정에 따라 변경될 수 있습니다.

When it is acceptable for the pressure values defined to not be **exactly** the nominal pressure value, operation can be simplified and mass loading errors reduced by loading mass with a lower level of resolution and using the pressure that the lower level resolution mass load generates. For example, on a piston-cylinder with a nominal pressure to mass relationship of 10 kPa/kg, defining a pressure of exactly 100 kPa, nominally requires loading 10 kg of mass. However, once all the influences on the measurement are taken into consideration, the actual mass to load to define exactly 100 kPa will not be 10.00000 kg; it will be a value near 10 kg such as 9.99731 kg. This value is difficult to load, as it requires relatively complex mass accounting and the manipulation of very small sub-gram masses. To avoid handling a difficult, odd mass value, one might instead decide to load 10 kg and use whatever pressure results. In this example, loading 10 kg rather than 9.99731 kg would result in defining 100.0269 kPa rather than 100.0000 kPa. The pressure defined is only very slightly different from the nominal value and there is no additional uncertainty if that value is used. The savings in time and reduction of possible mass loading errors are significant.

The PG7601-AF RES function is to select the mass loading resolution that PG7601-AF uses, starting at 0.01 g and increasing in powers of 10 to 0.1 kg. This function is very useful to make operation more convenient and less error prone when it is not imperative that the pressure defined by PG7601-AF be exactly the nominal pressure of the test or calibration sequence.

❍ **OPERATION**

To access the resolution function, press **[RES].** The display is:

```
Mass loading rsltn:
0.01 g       < and >
```

Press **[←]** and **[→]** to select the desired level of resolution. **[←]** decreases resolution and **[→]** increases resolution. Press **[ENTER]** to set the selected resolution and return to the MAIN run screen. The resolution range is from 0.01 g to 0.1 kg.

The RES setting has no affect in mass to pressure mode. The RES setting only affects the resolution of the mass commands that result from pressure entries in pressure to mass mode (see Section 4.3.12).

4.3.11 [SET P], SET OR MEASURE A PRESSURE

❍ **PURPOSE**

To enter and execute *pressure to mass* or *mass to pressure* commands (see Section 4.3.12).

❍ **PRINCIPLE**

PG7601-AF can calculate and display the mass to be loaded to achieve an entered pressure value (*pressure to mass* mode), or the pressure resulting from an entered mass load (*mass to pressure* mode). The P OR M function is used to set *pressure to mass* or *mass to pressure* mode (see Section 4.3.12).

Pressing **[SET P]** from any run screen (MAIN, SYSTEM or AMBIENT) accesses the pressure or mass entry screen which allows the command value to be entered and proceeds through the sequence to set or read the pressure defined by PG7601-AF.

© 2008 DH Instruments, a Fluke Company

원문: Fluke Calibration PG7601 메뉴얼(영문) · 제조사 원문 자료입니다. 사양은 제조사 사정에 따라 변경될 수 있습니다.

TS-TL-FLK-094

we measure, we calibrate, we validate.
㈜테솔 · www.tessol.com TS-TL-FLK-094 83 / 234
KOLAS 국제공인교정기관 · ISO/IEC 17025

❍ OPERATION

To access the pressure or mass entry screen, press **[SET P]** from any run screen. The sequence after **[SET P]** has been pressed varies between *mass to pressure* and *pressure to mass* mode. The mode is selected by pressing **[P OR M]** (see Section 4.3.12). See Section 4.3.11.1 for details on **[SET P]** in *pressure to mass* mode and Section 4.3.11.2 for *mass to pressure* mode. See immediately below for typical operational sequences in gauge and absolute modes.

Typical gauge and absolute by ATM [SET P] operational sequence

❶ Press **[MODE]** and select gauge or absolute by ATM (aatm) mode if not already in desired moe (see Section 4.3.4).

❷ Press **[P OR M]** and select *pressure to mass* or *mass to pressure* mode if not already in desired mode (see Section 4.3.12).

❸ Press **[SET P]** and enter a pressure or mass value. If the piston is floating and AutoRotate is ON, the braking function engages to stop piston rotation (see Section 4.3.8). Otherwise, stop rotation using **[↻]** followed by **[←]** (see Section 4.3.13).

❹ Load mass as instructed (see Section 4.1.5).

❺ Use the PPC3-7M-AF pressure controller to float the PG7601-AF piston. If the AutoGen function is ON, the automated pressure control component floats the piston automatically (see Section 4.3.9). Otherwise, use the PPC-7M-AF direct pressure control keys (see Section 4.2.2.2).

❻ When PG7601-AF indicates *Ready* on all *Ready/Not Ready* indicators (see Section 4.1.3), take a DUT reading at the pressure indicated on the top line of PG7601-AF display.

❼ Repeat Steps ❸ through ❻ for each pressure value desired.

❽ Consider setting <0> as the last point or after last point to vent system and leave it in a known state (see Section 4.3.11.3).

Typical Absolute by Vacuum Mode Operational Sequence

❶ Press **[MODE]** and select absolute by vacuum (avac) mode if not already in this mode (see Section 4.3.4).

❷ Press **[P OR M]** and select *pressure to mass* or *mass to pressure* mode if not already in desired mode (see Section 4.3.12).

❸ Press **[SET P]** and enter a pressure or mass value. If AutoRoate is ON, the braking function engages to stop piston rotation (see Section 4.3.8). Otherwise, stop rotation using **[↻]** followed by **[←]** (see Section 4.3.13).

❹ Load mass as instructed (see Section 4.1.5).

❺ Install bell jar on PG7601-AF, shut vacuum vent valve, open vacuum reference shutoff valve (see Section 2.1). Wait for vacuum under bell jar to reach *Ready* condition (see Section 4.1.3.3).

❻ Use the PPC3-7M-AF pressure controller to float the PG7601-AF piston. If the AutoGen function is ON, the automated pressure control component floats the piston automatically (see Section 4.3.9) (automated pressure control does not start until reference vacuum is under *Ready* limit). Otherwise, use the PPC-7M-AF direct pressure control keys (see Section 4.2.2.2)

❼ When PG7601-AF indicates *Ready* on all *Ready/Not Ready* indicators (see Section 4.1.3), take a DUT reading at absolute pressure indicated on the top line of the PG7601-AF display.

❽ Shut vacuum reference shutoff valve, open vacuum vent valve. Wait for pressure under bell jar to return to ambient. Remove bell jar.

❾ Repeat Steps ❸ through ❽ for each desired pressure point.

원문: Fluke Calibration PG7601 메뉴얼(영문) · 제조사 원문 자료입니다. 사양은 제조사 사정에 따라 변경될 수 있습니다.

⑩ Consider setting <0> as the last point or after last point to vent system and leave it in a known state (see Section 4.3.11.3).

4.3.11.1 [SET P] IN PRESSURE TO MASS MODE

❍ PURPOSE

To enter and execute a *pressure to mass* command in *pressure to mass* mode (see Section 4.3.12).

❍ OPERATION

Use **[P OR M]** to put the PG7601-AF in *pressure to mass* operation mode (see Section 4.3.12), then press **[SET P]** in any run screen. If automated rotation is on, the **<DECELERATING>** screen shows until piston deceleration is complete.

Pressing [ENTER/SET P] in the run screen causes automated pressure generation to be suspended if ON (see Section 4.3.9) and AutoRotate to stop piston rotation if ON (see Section 4.3.8). When [ENTER/SET P] is pressed to confirm mass entry, automated pressure generation and/or motorized rotation resume.

The display is:

1. Current measurement mode.
2. Current pressure unit of measure.
3. Entry field for the target value of pressure to be set.

```
Target pressure:
100.0000 kPa a
```

3 2 1

Use the numerical and editing keys to enter the target pressure value desired.

Press **[ENTER/SET P]** to process the target pressure value. If the pressure value entered cannot be executed, an explanatory error message is displayed momentarily and operation returns to the target pressure entry screen with the previous target pressure value displayed. If the target pressure value entered is valid, the value is processed and operation proceeds to the mass loading instruction screen. The display is:

1. Mass to load using trim masses.
2. Nominal mass to load using main and fractional masses.

```
Load nominal mass:
10.0 kg and 3.17 g
```

2 1

With PG7601-AF in absolute by vacuum measurement mode (see Section 4.3.4), the instruction is **<Load mass & vac:>** indicating that the mass should be loaded and then the bell jar should be installed and vacuum established under the bell jar.

Load the nominal mass value following the protocol described in Section 4.1.5 and press **[SET P]**. When **[SET P]** is pressed confirming that the nominal mass value has been loaded, operation returns to the previous run screen with the new pressure target and mass value active.

© 2008 DH Instruments, a Fluke Company

원문: Fluke Calibration PG7601 메뉴얼(영문) · 제조사 원문 자료입니다. 사양은 제조사 사정에 따라 변경될 수 있습니다.

we measure, we calibrate, we validate.
㈜테솔 · www.tessol.com TS-TL-FLK-094 85 / 234
KOLAS 국제공인교정기관 · ISO/IEC 17025

TS-TL-FLK-094

To make in tolerance measurements, it is imperative that all mass loading instructions be executed following the protocol describe in Section 4.1.5. This ensures that the actual mass value resulting from a nominal mass loading command will be correct. Failure to load masses following the PG7601-AF mass loading protocol is likely to result in out of tolerance mass load determinations and pressure definitions.

The resolution with which the *pressure to mass* mode mass loading instruction is given depends on the resolution set in the RES function. The RES function makes it possible to avoid loading high resolution mass values when it is not imperative that the pressure defined be exactly the nominal pressure requested (see Section 4.3.9.6).

The *pressure to mass* loading instruction is given in nominal mass while the MAIN run screen displays the true mass loaded (see Section 4.1.5). For this reason, the nominal mass loading instruction and the true mass displayed in the MAIN run screen are slightly different values. This is normal operation.

4.3.11.2 [SET P] IN MASS TO PRESSURE MODE

PURPOSE

To enter and execute a *mass to pressure* command in *mass to pressure* mode (see Section 4.3.12).

OPERATION

Use **[P OR M]** to put the PG7601-AF in *mass to pressure* operation mode (see Section 4.3.12), then press **[SET P]** in any run screen. If automated rotation is on, the **<DECELERATING>** screen shows until piston deceleration is complete.

Pressing [SET P] in the run screen causes automated pressure generation to be suspended if ON (see Section 4.3.9) and AutoRotate to stop piston rotation if ON (see Section 4.3.13). When [SET P] is pressed to confirm mass entry, automated pressure generation and/or motorized rotation resume.

The display is:

1. Edit field for total trim mass currently loaded.
2. Edit field for nominal mass of main and fractional masses currently loaded.

```
Load nominal mass:
10.0 kg and 3.17 g
```

2 1

Use the numerical and editing keys to enter the nominal mass loaded on the piston following the mass loading protocol described in Section 4.1.5. Press **[SET P]** to process the mass value. If the mass value entered cannot be executed, an explanatory error message is displayed momentarily and operation returns to the mass entry screen with the previous nominal mass value displayed. If the mass value entered is valid, the value is processed and operation proceeds to the previous run screen with the new mass value active.

원문: Fluke Calibration PG7601 메뉴얼(영문) · 제조사 원문 자료입니다. 사양은 제조사 사정에 따라 변경될 수 있습니다.

To make in tolerance measurements, it is imperative that the value of mass loaded on the piston be the NOMINAL mass following the protocol described in Section 4.1.5. This ensures that PG7601-AF will correctly determine the true mass value loaded. Failure to enter nominal mass values following the PG7601-AF mass loading protocol is likely to result in out of tolerance mass load determination and pressure definitions.

The setting of the RES function has no effect on the resolution of mass load entries in *mass to pressure* mode (see Section 4.3.9.6).

The *mass to pressure* mass entry is expressed in nominal mass while the MAIN run screen displays the true mass loaded (see Section 4.1.5). For this reason, the nominal mass loading instruction and the true mass displayed in the MAIN run screen are slightly different values. This is normal operation.

4.3.11.3 COMMANDS FOR ZERO PRESSURE, ENDING A TEST

Entering a value of zero as the target presure is a convenient way to end a test and vent the automated pressure control component when AutoGen is ON.

Entering a value of zero in *pressure to mass* mode causes the following sequence to occur:

❶ Stop piston rotation if AutoRotate is ON.

❷ Vent pressure control component if AutoGen is ON or prompt operator to vent.

❸ A special run screen displays reflecting that the PG7601-AF is at rest and the mass loading bell may not be installed.

The display following execution of a 0 command is:

1. **<?>** in *Ready/Not Ready* indicator positions since status of piston is unknown since mass loading bell may not be installed.
2. Unknown pressure except in absolute by atmosphere measurement mode in which the current value of atmospheric pressure is displayed. This is the value of absolute by atmospheric pressure when the system is vented.
3. Unknown/meaningless mass load.
4. Unknown/meaningless piston position as bell may not be loaded.

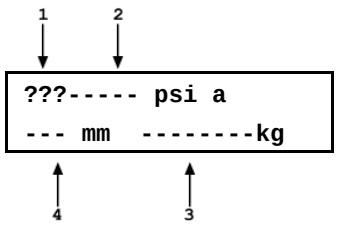

4.3.12 [P OR M], SET PRESSURE TO MASS OR MASS TO PRESSURE OPERATING MODE

❍ **PURPOSE**

To select between PG7601-AF *pressure to mass* or *mass to pressure* operation mode.

© 2008 DH Instruments, a Fluke Company

원문: Fluke Calibration PG7601 메뉴얼(영문) · 제조사 원문 자료입니다. 사양은 제조사 사정에 따라 변경될 수 있습니다.

❍ **PRINCIPLE**

Piston gauges are generally used either to define desired pressure set points (e.g. when applying reference pressures to a device to be calibrated) or to measure a static pressure (e.g. when performing a crossfloat intercomparison with another piston gauge). PG7601-AF supports these two typical situations with two operating modes: *pressure to mass* and *mass to pressure.*

In *pressure to mass* operating mode, the operator enters target pressure values and the PG7601-AF provides instructions of the mass to load to achieve the desired target pressure.

In *mass to pressure* operating mode, the operator enters the mass currently loaded and the PG7601-AF determines the pressure resulting from the current mass load. *Mass to pressure mode* is also useful to determine the true mass resulting from a nominal mass load (see Section 4.1.5), since the true mass resulting from an nominal mass load is displayed in the MAIN run screen.

The P OR M function is used to set the PG7601-AF operating mode to either pressure to mass or mass to pressure.

❍ **OPERATION**

For details on pressure to mass and mass to pressure operation, see Section 4.3.11.

To access the P OR M function, press **[P OR M]**. the display is:

```
Select entry mode:
1pressure 2mass
```

Selecting **<1pressure>** activates *pressure to mass* mode and returns to the previous run screen.

Selecting **<2mass>** activates *mass to pressure* mode and returns to the previous run screen.

4.3.13 [↻] AND [↻], [←], MANUAL CONTROL OF MOTORIZED ROTATION

❍ **PURPOSE**

For the operator to engage motorized piston rotation acceleration or deceleration.

❍ **PRINCIPLE**

Piston rotation should always be stopped by the motorized rotation system or manually before the pressure is changed. Piston rotation should not be stopped by friction of the rotating piston against the upper or lower end of stroke stop.

Motorized piston rotation is a standard feature on PG7601-AF. Motorized rotation engages and disengages to rotate or stop the rotation of the PG7601-AF piston.

Motorized rotation can be set to engage and disengage automatically to maintain the piston within *Ready* condition rotation rate limits when the piston is floating and stop rotation before changing the pressure or mass load (see Section 4.3.8). Motorized rotation can also be engaged manually to accelerate or brake piston rotation at any time under direct operator control.

[↻] is used for momentary acceleration of piston rotation. **[↻]**, held and followed by **[←]** is used to start a function that stops piston rotation.

❍ **OPERATION**

To momentarily engage the motorized piston rotation system and accelerate the piston, press **[↻]** from any run screen. The motorized rotation system engages and remains engaged until maximum rotation rate has been achieved or the key is released.

원문: Fluke Calibration PG7601 메뉴얼(영문) · 제조사 원문 자료입니다. 사양은 제조사 사정에 따라 변경될 수 있습니다.

The display is a modified version of the 1st SYSTEM run screen (see Section 4.3.5) to indicate that piston rotation is being accelerated while showing rotation rate and piston position:

1. Current piston rotation rate.
2. Current rate of piston vertical displacement.
3. Current piston position.

```
1
12 rpm ACCELERATING
+ 2.05 mm    0.1/min
3            2
```

To start the piston braking function press and hold **[↻]**, then press **[←]**. The motorized rotation system engages and stays engaged until the piston rotation is stopped. Once the braking function starts the keys may be released and the function will complete unless **[ESCAPE]** is pressed.

The display is a modified version of the 1st SYSTEM run screen (see Section 4.3.5) to indicate that piston rotation is being decelerated while showing rotation rate and position:

1. Current piston rotation rate.
2. Current rate of piston vertical displacement.
3. Current piston position.

```
1
48 rpm DECELERATING
+ 2.05 mm    0.1/min
3            2
```

To interrupt the piston rotation braking routine, press **[ESCAPE]**.

The motorized rotation system can be set to operate automatically based on current piston position and rotation rate. See Section 4.3.8 for information.

4.4 [SETUP] MENU, MANAGE PRESSURE EQUATION VARIABLE SOURCES

❍ PURPOSE

To select, view and edit the SETUP files that determine the source of the values that PG7601-AF uses in its calculation of defined pressure and as criteria for *Ready/Not Ready* condition determination.

The factory default SETUP file #1 is the file normally used for PG7601-AF operation.

❍ PRINCIPLE

The PG7601-AF piston gauge perform continuous, real time calculations of the pressure defined by the floating piston under current conditions (see Section 9.2.1 for the details on the calculations applied). The calculations are used to determine the defined pressure displayed in the MAIN run screen, and to arrive at the mass to load value when a target pressure is entered in pressure to mass mode.

The equations that PG7601-AF uses to calculate pressure include many instrument and ambient variables. PG7601-AF allows the source of the value used for each variable to be specified. For example, the value of barometric pressure used to calculate current air density and to add to gauge

© 2008 DH Instruments, a Fluke Company

원문: Fluke Calibration PG7601 메뉴얼(영문) · 제조사 원문 자료입니다. 사양은 제조사 사정에 따라 변경될 수 있습니다.

TS-TL-FLK-094

we measure, we calibrate, we validate.
㈜테솔 · www.tessol.com TS-TL-FLK-094 89 / 234
KOLAS 국제공인교정기관 · ISO/IEC 17025

pressure to define absolute pressure in *absolute by atmosphere* mode could come either from PG7601-AF's internal sensor, an external barometer (optional) connected to PG7601-AF's COM2 port, a user entered value or be set to standard atmospheric pressure. The PG7601-AF SETUP function allows the source (and in some cases the value) of the variables used in the pressure equation to be specified. In order to allow various combinations of sources and/or values to be setup and recalled, SETUP files can be created, stored, edited and recalled. The SETUP files also include certain variables used to determine PG7601-AF *Ready/Not Ready* status. Table 11 identifies the variables included in the SETUP file, the factory source setting for each variable and the default value for each variable.

Variable source and value selections are recorded in SETUP files. These files can be stored and recalled so that specific combinations of variable sources and/or values can be conveniently recalled. There are 10 SETUP files available. File #1 is a factory SETUP file that cannot be edited. It includes the factory default variable choices and values. PG7601-AF is normally used with SETUP file #1 selected.

SETUP files, USER values and PG7601-AF's calculation capabilities can be used to calculate defined pressure in specific conditions independent of actual PG7601-AF operation.

The SETUP function supports the following:

- View SETUP files (see Section 4.4.2);
- Create/edit SETUP files (see Section 4.4.3);
- Select active SETUP file (see Section 4.4.1).

원문: Fluke Calibration PG7601 메뉴얼(영문) · 제조사 원문 자료입니다. 사양은 제조사 사정에 따라 변경될 수 있습니다.

we measure, we calibrate, we validate.
KOLAS 국제공인교정기관 · ISO/IEC 17025

Table 11. SETUP file choices, factory preferred choice and normal value

VARIABLE	SOURCE CHOICES	NORMAL VALUE	FACTORY DEFAULT CHOICE (SETUP FILE #1)
Atmospheric pressure	1. Internal 2. Normal 3. User 4. COM2	101.325 kPa (14.6959 psi)	1. Internal (measurement)
Ambient temperature	1. Internal 2. Normal 3. User	20 °C	1. Internal (measurement)
Ambient relative humidity	1. Internal 2. Normal 3. User	45 %RH	1. Internal (measurement)
Piston-cylinder temperature	1. Internal 2. Normal 3. User	20 °C	1. Internal (measurement)
Gravity	1. Local 2. Normal 3. User	9.806650 m/s^2	1. Local
Vacuum	1. Internal 2. Normal 3. User 4. COM2	0 Pa	1. Internal (measurement)
Ready/Not Ready Piston position	1. User	None	1. User (fixed value, ± 2.5 mm default)
Ready/Not Ready Maximum vacuum reference pressure in absolute by vacuum mode	1. User	None	1. User (fixed value, 5 Pa absolute default)

The factory default SETUP choice is the SETUP choice setting for all variables in a new SETUP file. SETUP file #1 is fixed to factory SETUP choices and cannot be altered.

❍ OPERATION

To access the SETUP menu, press **[SETUP]** from the MAIN run screen. The display is:

```
Current SETUP: #01
1select 2view 3edit
```

<#nn> in the upper right hand corner displays the number of the SETUP file that is currently active.

Select **<1select>** to select a different SETUP file to be active (see Section 4.4.1).

Select **<2view>** to view the variable choices and values of the active SETUP file (see Section 4.4.2).

Select **<3edit>** to create or edit a SETUP file (see Section 4.4.3).

4.4.1 <1SELECT>

❍ PURPOSE

To change the active SETUP file number.

© 2008 DH Instruments, a Fluke Company

원문: Fluke Calibration PG7601 메뉴얼(영문) · 제조사 원문 자료입니다. 사양은 제조사 사정에 따라 변경될 수 있습니다.

we measure, we calibrate, we validate.
KOLAS 국제공인교정기관 · ISO/IEC 17025
㈜테솔 · www.tessol.com TS-TL-FLK-094 91 / 234

TS-TL-FLK-094

PG7601-AF is normally operated with factory SETUP file #1. Changing the current SETUP file will change the source and in some cases the values of the variables used by PG7601-AF in calculating defined pressure. SETUP files should be selected and changed only by qualified personnel. Incorrect SETUP file selection may cause out of tolerance calculations and measurements. See Section 4.4, ❍ PRINCIPLE, for information on SETUP files and their use.

❍ **OPERATION**

To select a SETUP file number to make it the active SETUP file, use **[SETUP]**, **<1select>**. Enter the number of the desired SETUP file and press **[ENTER]**. If a valid SETUP file number has been entered, operation returns to the previous run screen with the selected SETUP file number displayed and active.

Entering an invalid SETUP file number causes an error message to be displayed briefly and returns to the select SETUP file screen.

If the SETUP file selected specifies COM2 as the source of barometric pressure, PG7601-AF attempts to read a barometer on COM2 when initializing the new SETUP file. If PG7601-AF is unable to read a barometer on COM2, a communications time out message is displayed briefly and operation returns to the select SETUP file screen. See Section 4.5.5.4 for information on configuring COM2 to read an external barometer.

4.4.2 <2VIEW>

❍ **PURPOSE**

To view the contents of any SETUP file number.

❍ **OPERATION**

Selecting <2view> SETUP allows any SETUP file to be selected and viewed. Selecting a file in <2view> does not make it active. To specify the active SETUP file, use [SETUP], <1select>.

See Table 11 for a listing of the source choices for each SETUP file variable.

To view an existing SETUP file, press **[SETUP]**, **<2view>**. The display is:

```
View SETUP file:
#02
```

1. Entry field for number of SETUP file to be viewed. Defaults to SETUP file currently selected.

Enter the desired SETUP file number and press **[ENTER]**.

If a valid SETUP file number is entered, the display is:

```
View #02 latmP 2ambT
3%RH 4PCT 5g 6READY↓
 7vac
```

Select **<1atmP>** to view the atmospheric pressure variable source choice and current value. The value is displayed in the current pressure unit of measure (see Section 4.3.3).

원문: Fluke Calibration PG7601 메뉴얼(영문) · 제조사 원문 자료입니다. 사양은 제조사 사정에 따라 변경될 수 있습니다.

we measure, we calibrate, we validate.
KOLAS 국제공인교정기관 · ISO/IEC 17025

Select **<2ambT>** to view the ambient temperature variable source choice and the current value. The value is displayed in degrees Centigrade **[°C]**.

Select **<3%RH>** to view the ambient relative humidity variable source choice and the current value. The value is displayed in %RH.

Select **<4PCT>** to view the piston-cylinder temperature variable source choice and the current value. The value is displayed in degrees Centigrade **[°C]**.

Select **<5g>** to view the gravity variable source choice and the current value. The value is displayed in meters per second squared **[m/s^2]**.

Select **<6READY>** to view the values of *Ready/Not Ready* status criteria (see Section 4.1.3). These include:

<1Pposition> Piston position *Ready/Not Ready* limits (see Section 4.1.3.1). The value is displayed as a band in millimeters about mid-float position **[± mm]** (see Section 4.1.4). The default is 2.5 mm.

<2vac> Maximum reference vacuum pressure limit when operating in absolute by vacuum mode. The value is displayed in Pascal **[Pa]**. The default is 5 Pa.

Select **<7vac>** : to view the reference vacuum variable source choice and the current value. The value is displayed in Pascal **[Pa]**.

4.4.3 <3EDIT>

❍ PURPOSE

To edit an existing SETUP file and/or to create a new SETUP file.

See Section 4.4, PRINCIPLE for information on SETUP files and their purpose.

❍ OPERATION

SETUP file #1 is the factory preferred file and it cannot be edited.

See Table 11 for a listing of the source choices for each variable.

To edit an existing SETUP file or create a new SETUP file, press **[SETUP]**, **<3edit>**. The display is:

```
Edit SETUP file:
#02
```

1. Entry field for number of SETUP file to be edited or created. Defaults to SETUP file currently selected, but not #1 since SETUP file #1 cannot be edited.

Enter the desired SETUP file number and press **[ENTER]**.

If a valid SETUP file number is entered, the display is:

```
Edit #02 latmP 2ambT
3%RH 4PCT 5g 6READY↓
 7vac
```

Selecting an item leads to the variable source choices menu for that item. The cursor is on the source choice that is currently selected in that SETUP file number. Select the desired variable source. The selection causes the variable choice selection to be made and returns to the edit menu. From the variable source choice menus, pressing **[ENTER]** or **[ESCAPE]**

© 2008 DH Instruments, a Fluke Company

원문: Fluke Calibration PG7601 메뉴얼(영문) · 제조사 원문 자료입니다. 사양은 제조사 사정에 따라 변경될 수 있습니다.

TS-TL-FLK-094

we measure, we calibrate, we validate.
㈜테솔 · www.tessol.com TS-TL-FLK-094 93 / 234
KOLAS 국제공인교정기관 · ISO/IEC 17025

returns to the edit selection menu. This allows easy, discreet movement between variable source choices when editing a SETUP file.

Select **<1atmP>** to specify the atmospheric pressure variable source for the pressure values that are used to calculate ambient air density and to add to gauge pressure measurements to calculate absolute pressure in absolute by addition of atmosphere mode. Selecting **<1atmP>** offers the atmospheric pressure variable source choices:

<1internal> Use real time readings from PG7601-AF's on-board barometer.

<2normal> Use a fixed value of 101.325 kPa (14.6959) psi.

<3user> Use a fixed user entered value. If **<3user>** is selected, the user value must be entered, in the current pressure unit of measure.

<4COM2> Use real time readings from the device connected by RS232 to PG7601-AF's COM2 port. The external barometer (optional) must be properly set up to communicate with PG7601-AF (see Section 4.5.5.4 for information on setting up to read an external barometer).

Select **<2ambT>** to specify the ambient temperature variable source for the temperature values that are used to calculate ambient air density. Selecting **<2ambT>** offers the temperature variable source choices:

<1internal> Use real time readings from PG7601-AF's on-board ambient temperature platinum resistance thermometer (on the platform rear panel).

<2normal> Use a fixed value of 20 °C.

<3user> Use a fixed user entered value. If **<3user>** is selected, the user value must be entered, in degrees Centigrade **[°C]**.

Select **<3%RH>** to specify the relative humidity variable source for the relative humidity values that are used to calculate ambient air density. Selecting **<3%RH>** offers the relative humidity variable source choices:

<1internal> Use real time readings from PG7601-AF's on-board relative humidity sensor (on the platform rear panel).

<2normal> Use a fixed value of 45 %RH.

<3user> Use a fixed user entered value. If **<3user>** is selected, the user value must be entered, in percent relative humidity **[%RH]**.

Select **<4PCT>** to specify the piston-cylinder temperature variable source for the temperature values that are used to compensate piston-cylinder effective area for temperature. Selecting **<4PCT>** offers the temperature variable source choices:

<1internal> Use real time readings from PG7601-AF's on-board piston-cylinder temperature platinum resistance thermometer (embedded in the piston-cylinder module mounting post).

<2normal> Use a fixed value of 20 °C.

<3user> Use a fixed user entered value. If **<3user>** is selected, the user value must be entered, in degrees Centigrade **[°C]**.

Select **<5g>** to specify the value of acceleration due to gravity that is used in calculating the force applied to the piston. Pressing **<5g>** offers the gravity variable source choices:

<1locall> Use the fixed value of local gravity stored under **[SPECIAL]**, **<6gl>** (see Section 4.5.6).

<2normal> Use a fixed value of 9.806650 m/s^2.

원문: Fluke Calibration PG7601 메뉴얼(영문) · 제조사 원문 자료입니다. 사양은 제조사 사정에 따라 변경될 수 있습니다.

TS-TL-FLK-094

we measure, we calibrate, we validate.
㈜테솔 · www.tessol.com TS-TL-FLK-094 94 / 234
KOLAS 국제공인교정기관 · ISO/IEC 17025

<3user> Use a fixed user entered value different from the current local gravity value stored in the **[SPECIAL]**, **<6gl>** menu option. If **<3user>** is selected, the user value must be entered, in meters per second squared [m/s^2].

Select **<6READY>** to edit the values of *Ready/Not Ready* status criteria (see Section 4.1.3). These include:

<1position>: Piston position limits. Edit the fixed value, in millimeters **[mm]**, of the band around mid-float position within which the piston position is *Ready* (see Section 4.1.3.1). This also determines the limit at which the piston is refloated by the GEN function when GEN is ON (see Section 4.3.9).

<2vac>: Maximum reference vacuum pressure when operating in absolute by vacuum mode. Edit the value, in Pascal **[Pa]**, under which the reference vacuum must be for a vacuum *Ready* condition to occur (see Section 4.1.3.3).

Select **<7vac>** to specify the reference vacuum variable source for the value used for the pressure under the bell jar when calculating the absolute pressure defined in *absolute by vacuum* mode. Pressing **<7vac>** offers the reference vacuum variable source choices:

<1internal>: Use real time readings from PG7601-AF's on-board vacuum gauge (mounted directly in the vacuum plate, under the mass load).

<2normal>: Use a fixed value of 0 Pa.

<3user>: Use a fixed user entered value. If **<3user>** is selected, the user value must be entered, in Pascal **[Pa]**.

<4COM2>: Use real time readings from or through the device connected by RS232 to PG7601's COM2 port. The external vacuum gauge must be properly set up to communicate with PG7601-AF (see Section 4.5.5.5 for information on setting up to read an external vacuum gauge).

4.5 [SPECIAL] MENU

❍ PURPOSE

The **[SPECIAL]** key accesses a menu of PG7601-AF functions and settings that are less commonly or not normally used in regular operation.

❍ OPERATION

To access the SPECIAL menu, press **[SPECIAL]** from the MAIN run screen. This display is:

```
1PC/MS 2presU 3head
4prefs 5remote 6gl ↓
7cal 8AMH 9reset
```

Some screens, such as the SPECIAL menu, go beyond the two lines provided by the display. This is indicated by an arrow in the second line of the display. Press [←] and [→] to move the cursor to access the lines that are NOT visible or directly enter the number of the hidden menu choice if you know it.

Special menu choices include:

© 2008 DH Instruments, a Fluke Company

원문: Fluke Calibration PG7601 메뉴얼(영문) · 제조사 원문 자료입니다. 사양은 제조사 사정에 따라 변경될 수 있습니다.

we measure, we calibrate, we validate.
㈜테솔 · www.tessol.com TS-TL-FLK-094 95 / 234
KOLAS 국제공인교정기관 · ISO/IEC 17025

TS-TL-FLK-094

<1PC/MS>: Creat, edit and view piston-cylinder module, mass set and mass loading bell digital identifications (digital ID). Select mass set and mass loading bell to be used (see Section 4.5.1).

<2presU>: Customize the pressure unit of measure choices available under **[UNIT]** (see Section 4.5.2).

<3head>: Change the height unit of measure and the fluid used in DUT head corrections; adjust the barometer head height; turn the automated piston position head correction ON and OFF (PG7302 only) (see Section 4.5.3).

<4prefs>: To access a menu of internal PG7601-AF operational preferences and functions including screen saver, sounds, time/date, instrument ID and user level protection (see Section 4.5.4).

<5remote>: Set up/modify PG7601-AF RS232 (COM1, COM2, COM3) and IEEE-488 interfaces. Test RS232 ports. Set up external barometer communications (see Section 4.5.5).

<6gl>: Set the value of local gravity used by PG7601-AF in reference pressure calculations when *gl* is specified as the gravity value in the active SETTINGS file (see Section 4.5.6).

<7cal>: View the output of and adjust PG7601-AF internal sensors and measurement systems (see Section 4.5.7).

<8AMH>: View the status of and directly control an AMH automated mass handler (optional accessory not included in PG7601-SYS-AF system) (see Section 4.5.8).

<9reset>: Access and execute various reset options (see Section 4.5.9).

4.5.1 <1PC/MS>, MANAGE METROLOGICAL ELEMENT DIGITAL IDs

❍ PURPOSE

To create, edit and view piston-cylinder module, mass set and mass loading bell digital identifications (digital ID). Select mass set and mass loading bell to be used.

See Section 4.3.2 for information on using [P-C] for rapid access to piston-cylinder module selection in regular day to day operation.

Piston-cylinder, mass set and mass bell digital IDs can also be managed using CalTool for PG7000 software (see Section 7.4). In normal operation, using CalTool for PG7000 remotely is preferable to using the PG Terminal front panel.

The piston-cylinder module and mass set information contained in the digital IDs accessed using <1PC/MS> is element specific metrological data. Uninformed or accidental altering of this information may lead to out of tolerance measurements. Piston-cylinder module and mass set information should only be edited by qualified personnel as part of the PG7601-AF calibration or recalibration process.

❍ PRINCIPLE

To calculate the pressure defined by its floating piston, PG7601-AF must have available the specific characteristics of the piston-cylinder module, mass set and mass loading bell that are

원문: Fluke Calibration PG7601 메뉴얼(영문) · 제조사 원문 자료입니다. 사양은 제조사 사정에 따라 변경될 수 있습니다.

being used. This information is stored in the PG7601-AF platform memory in digital identification records referred to as digital IDs. Digital IDs can be created, viewed and edited using functions under **[SPECIAL]**, **<1PC/MS>**. This is also where the active mass and mass loading bell are selected.

The piston-cylinder module and mass set information required by PG7601-AF is reported in the Calibration Reports that are delivered with the metrological elements. When the PG7601-AF platform and metrological elements are delivered together, the digital IDs for the metrological element information have normally already been created in PG7601-AF memory. If the metrological elements are delivered separately from the platform or after a recalibration when new data is available, the information must be entered or edited by the user. This can be done using **CalTool for PG7000** software for from the PG Terminal front panel using functions under **[SPECIAL]**, **<1PC/MS>**. See Section 7.4 for information on using **CalTool for PG7000** software to manage metrological element digital IDs.

Piston-cylinder, mass set and mass bell digital IDs can also be managed using CalTool for PG7000 software (see Section 7.4). In normal operation, using CalTool for PG7000 remotely is preferable to using the PG Terminal front panel.

❍ OPERATION

To access the piston-cylinder module, mass set and mass loading bell digital IDs, press **[SPECIAL]**, **<1PC/MS>**. The display is:

```
1PC 2mass set
3mass bell
```

Select the type of metrological element digital ID that you would like to view, edit, create or make active.

See Sections 4.5.1.1 to 4.5.1.15 for operation of specific piston-cylinder module, mass set and mass bell functions as follows:

Piston-cylinder module

Create a new digital ID (see Section 4.5.1.1).

Edit existing digital ID (see Section 4.5.1.2).

View existing digital ID (see Section 4.5.1.3).

Delete existing digital ID (see Section 4.5.1.4).

Select a piston-cylinder module to be active (see Section 4.5.1.5).

Mass set

Create a new digital ID (see Section 4.5.1.6).

Edit existing digital ID (see Section 4.5.1.7).

View existing digital ID (see Section 4.5.1.8).

Delete existing digital ID (see Section 4.5.1.9).

Select a mass set to be active (see Section 4.5.1.10).

Mass loading bell

Create a new digital ID (see Section 4.5.1.11).

Edit existing digital ID (see Section 4.5.1.12).

View existing digital ID (see Section 4.5.1.13).

Delete existing digital ID (see Section 4.5.1.14).

Select a mass loading bell to be active (see Section 4.5.1.15).

© 2008 DH Instruments, a Fluke Company

원문: Fluke Calibration PG7601 메뉴얼(영문) · 제조사 원문 자료입니다. 사양은 제조사 사정에 따라 변경될 수 있습니다.

TS-TL-FLK-094

we measure, we calibrate, we validate. ㈜테솔 · www.tessol.com TS-TL-FLK-094 97 / 234

KOLAS 국제공인교정기관 · ISO/IEC 17025

4.5.1.1 CREATE PISTON-CYLINDER MODULE

PURPOSE

To create a new piston-cylinder module digital ID. The piston-cylinder module created is available for selection from the **[P-C]** function key.

If the piston-cylinder module and PG7601-AF platform were delivered together, the piston-cylinder module digital ID has normally already been created. Before creating a new piston-cylinder module, press [P-C] to check if it already exists (see Section 4.3.2).

PRINCIPLE

The PG7601-AF functions to add and edit piston-cylinder module digital IDs allow piston-cylinder variable values to be defined and stored. These values are used by PG7601-AF in calculating defined pressure, piston-cylinder range and *pressure to mass* and *mass to pressure* values when the piston-cylinder module is made active by selecting pressing **[P-C]**. The information needed can be found in the calibration report for the piston-cylinder module.

The values contained in a piston-cylinder module digital ID are listed in Table 12.

Table 12. Piston-cylinder module digital ID fields

FIELD	DESCRIPTION	UNIT OF MEASURE
Serial number (S/N)	Factory assigned serial number. Numeric only.	nnnn
Effective area (Ae)	Piston-cylinder area at 0 pressure and 20°C	mm^2
Piston temperature coefficient	Linear thermal expansivity of the piston material	$x\ 10^{-6}\ ^\circ C^{-1}$
Cylinder temperature coefficient	Linear thermal expansivity of the cylinder material	$x\ 10^{-6}\ ^\circ C^{-1}$
Effective area pressure coefficient	Change in effective area with pressure	$x\ 10^{-6}\ MPa^{-1}$
Piston-cylinder surface tension	Force due to surface tension of fluid. Zero for gas operated piston-cylinders	N/m
Reference level offset	Offset to correct hollow 10 and 50 kPa/kg piston-cylinder reference level to the standard PG7601-AF platform reference level	mm
Piston assembly mass	Mass of the piston, adjustment mass, cap and cap nut	kg
Piston assembly average density	Average overall density of the piston, adjustment mass, cap and cap nut	kg/m^3
Piston rotation rate limits	Lower limit below which piston rotation rate is *Not Ready*. Upper limit which is target rate of automated rotation.	rpm
k(P)	Special variable for high line differential pressure mode. Not used (zero) in PG7601-AF.	kg/mm/min
Calibration report number	Number of last calibration report issued for the piston-cylinder module	nnnnnnnnn

원문: Fluke Calibration PG7601 메뉴얼(영문) · 제조사 원문 자료입니다. 사양은 제조사 사정에 따라 변경될 수 있습니다.

we measure, we calibrate, we validate.
KOLAS 국제공인교정기관 · ISO/IEC 17025

Calibration report date	Date last calibartion report was issued	yyyymmdd

❍ OPERATION

Adding or editing a piston-cylinder module digital ID from the PG Terminal front panel requires the user to specify a large number of variables in a series of data entry screens described below. For a summary of the piston-cylinder module data requirements see Table 12.

PG7601-AF can store up to 18 piston-cylinder module digital IDs. When <3add> is selected and all the digital ID records have already been used, a warning is displayed. A digital ID record must be deleted before one can be added.

Piston-cylinder module digital IDs can be viewed, edited, uploaded and downloaded from a personal computer using CalTool for PG7000 software (see Section 7.4). For most users, CalTool is more convenient for this function than the PG Terminal front panel.

To create a new piston-cylinder module digital ID, press **[SPECIAL]** , **<1PC/MS>**, **<1PC>**, **<3add>**. A series of data entry screens will be presented. Edit each menu to reflect the correct information on the piston-cylinder module being added. Press **[ENTER]** after each entry to proceed to the next screen. Pressing **[ESCAPE]** at any point offers an **<Abandon edits?>** query and then returns to the **<1PC>** menu without saving any of the edited data or **[ENTER]** returns to the add piston-cylinder module process.

The data entry screens to add or edit a piston-cylinder module are, in order:

❶ **Serial number (S/N):** The serial number is four digits. The default is **<1>**. The number is marked on the piston cap.

❷ **Effective area at 0 pressure and 20 °C:** The value must be entered in square millimeters **[mm^2]**. The default is **<0>**. The value is reported in the calibration report for the piston-cylinder module.

❸ **Piston temperature coefficient:** The value must be entered as relative change per degree centigrade **[nn x 10^{-6}/°C]**. The 10-6 exponent is fixed. The default is **<00>**. The value is reported in the calibration report for the piston-cylinder module.

❹ **Cylinder temperature coefficient:** The value must be entered as relative change per degree centigrade **[nn x 10^{-6}/°C]**. The 10^{-6} exponent is fixed. The default is **<00>**. The value is reported in the calibration report for the piston-cylinder module.

❺ **Effective area pressure coefficient:** The value must be entered as relative change per MegaPascal **[n.nn x 10^{-6}/MPa]**. The 10^{-6} exponent is fixed. The default is **0.00**. The value is reported in the calibration report for the piston-cylinder module.

❻ **Piston-cylinder surface tension effect:** This value is always 0.00 for PG7601-AF piston-cylinders. The value is in Newton per meter **[N/m]**. The default is **0.00**.

❼ **Reference level offset:** The value must be entered in millimeters **[mm]**. The default is **0.00**. The value is also reported in the calibration report for the piston-cylinders.

© 2008 DH Instruments, a Fluke Company

원문: Fluke Calibration PG7601 메뉴얼(영문) · 제조사 원문 자료입니다. 사양은 제조사 사정에 따라 변경될 수 있습니다.

TS-TL-FLK-094

we measure, we calibrate, we validate.
KOLAS 국제공인교정기관 · ISO/IEC 17025

❽ **Piston assembly mass:** The value must be entered in kilogram **[kg]**. The default is **0.200000**. The value is reported in the calibration report for the piston-cylinder module.

❾ **Piston assembly average density:** The value must be entered in kilogram per cubic meter **[kg/m^3]**. The default is **0**. The value is reported in the calibration report for the piston-cylinder module.

❿ **Rotation rate limits [rpm]:** The minimum *Ready* rotation rate and the target maximum rate. The values must be entered in rotations per minute **[rpm]**. The value automatically defaults to the factory recommended value of 10 to 30 rpm. In most circumstances, the factory default values should be used.

⓫ **k(P) coefficient [kg/mm/min]:** Not used by PG7601-AF. The value is **0.**

⓬ **Calibration report number:** The calibration report number must be numeric only and can be up to nine (9) digits long. The default is **1**.

⓭ **Calibration report date:** The date must be expressed in yyyymmdd format. The default is **19800101**.

After pressing **[ENTER]** to accept the edited calibration report date, the option to save the edited piston-cylinder module information is presented. The display is:

```
Save PC S/N nnnn
1no 2yes
```

Select **<2yes>** to save the piston-cylinder module information under serial number nnnn and return to the **<1PC/MS>** menu.

Select **<1no>** to discard all edits and return to the **<1PC/MS>** menu.

4.5.1.2 EDIT PISTON-CYLINDER MODULE

❍ PURPOSE

To edit information contained in an existing piston-cylinder digital ID.

After a recalibration, a digital ID file (.DID) is normally delivered with the calibration report. CalTool for PG7000 software can be used to load the new digital ID into the PG7601-AF platform and update the calibration information without having to use the PG Terminal front panel (see Section 7.4).*

❍ PRINCIPLE/OPERATION

A piston-cylinder module digital ID contains element specific metrological data. Uninformed or accidental altering of this information may lead to out of tolerance measurements. Piston-cylinder module information should only be edited by qualified personnel as part of the PG7601-AF calibration or recalibration process.

See Section 4.5.1.1 describing adding a new piston-cylinder module. The principles and procedures to add or edit a piston-cylinder module digital ID are identical except for the identification of the piston-cylinder module to be edited.

To edit information on an existing piston-cylinder module, press **[SPECIAL]** , **<1PC/MS>**, **<1PC>**, **<2edit>**.

The display identifies the currently active piston-cylinder module. Press **[ENTER]** to edit the currently active piston-cylinder module or press **[P-C]** to toggle through the other piston-cylinder modules available. When the desired piston-cylinder module is

원문: Fluke Calibration PG7601 메뉴얼(영문) · 제조사 원문 자료입니다. 사양은 제조사 사정에 따라 변경될 수 있습니다.

we measure, we calibrate, we validate.
KOLAS 국제공인교정기관 · ISO/IEC 17025

identified, press **[ENTER]** to proceed with editing piston-cylinder module information. Operation of the editing function is identical to the add new piston-cylinder module procedure (see Section 4.5.1.1, OPERATION).

4.5.1.3 VIEW PISTON-CYLINDER MODULE

❍ PURPOSE

To view the information contained in an existing piston-cylinder module digital ID.

❍ PRINCIPLE/OPERATION

See Section 4.5.1.1, PRINCIPLE. The piston-cylinder module viewing function allows the piston-cylinder module information to be viewed but not altered.

To view information on an existing piston-cylinder module, press **[SPECIAL]** , **<1PC/MS>**, **<1PC>**, **<3view>**.

The display identifies the currently active piston-cylinder module. Press **[ENTER]** to view the currently active piston-cylinder module or press **[P-C]** to toggle through the other piston-cylinder modules available (see Section 4.3.2). When the desired piston-cylinder module is identified, press **[ENTER]** to proceed with viewing piston-cylinder module information. Successive pressing of **[ENTER]** steps through the piston-cylinder information screens in the same order as the add and edit functions.

4.5.1.4 DELETE PISTON-CYLINDER MODULE

❍ PURPOSE

To delete a piston-cylinder module digital ID so that it is no longer included in the piston-cylinder modules available for selection by pressing **[P-C]**.

❍ OPERATION

⚠ *Once a piston-cylinder module digital ID has been deleted it can only be recreated by downloading it from CalTool for Pressure software (see Section 7.4) or the PG Terminal add piston-cylinder module function must be used (see Section 4.5.1.1) which requires entering all the piston-cylinder module information. Before deleting a piston-cylinder module, consider editing it (see Section 4.5.1.2) and/or storing it using CalTool for PG7000 software.*

To delete a piston-cylinder module digital ID, press **[SPECIAL]**, **<1PC/MS>**, **<1PC>**, **<4delete>.**

The display identifies the currently active piston-cylinder module. Press **[ENTER]** to delete the currently active piston-cylinder module or press **[P-C]** to toggle through the other piston-cylinder modules available (see Section 4.3.2). When the desired piston-cylinder module is identified, press **[ENTER]** to proceed with deleting the piston-cylinder module information. Select **<2yes>** to delete the piston-cylinder module. Confirmation is required. Select **<1no>** to NOT delete.

4.5.1.5 SELECT THE ACTIVE PISTON-CYLINDER MODULE

❍ PURPOSE

To select a piston-cylinder module to be active and used by PG7601-AF in its mass loading and defined pressure calculations.

© 2008 DH Instruments, a Fluke Company

원문: Fluke Calibration PG7601 메뉴얼(영문) · 제조사 원문 자료입니다. 사양은 제조사 사정에 따라 변경될 수 있습니다.

TS-TL-FLK-094

we measure, we calibrate, we validate.
㈜테솔 · www.tessol.com TS-TL-FLK-094 101 / 234
KOLAS 국제공인교정기관 · ISO/IEC 17025

This function serves the same purpose as pressing [P-C] (see Section 4.3.2).

OPERATION

To select the active piston-cylinder module press **[SPECIAL]** , **<1PC/MS>**, **<1PC>**, **<5select>**.

4.5.1.6 ADD MASS SET

PURPOSE

To create a new mass set digital ID.

If the mass set and PG7601-AF platform were delivered together, the mass set digital ID has normally already been created. Before creating a new mass set, view mass sets to check if it already exists (see Section 4.5.1.8).

PRINCIPLE

The PG7601-AF functions to add and edit mass set digital IDs allow mass set variable values to be defined and stored. These values are used by PG7601-AF to calculate nominal mass instructions and true mass loads. Up to three mass sets can be created.

The values contained in a PG7601-AF mass set digital ID are listed in Table 13.

Table 13. Mass set digital ID fields

FIELD	DESCRIPTION	UNIT OF MEASURE
Serial number (S/N)	Factory assigned serial number. Numeric only	nnnn
Mass density	Density of the stainless steel of which the masses are made	kg/m^3
Mass set type	Manual or AMH. The standard PG7601-SYS-AF mass set, MS-7001-35-AF, is manual.	none
Calibration report number	Number of last calibration report issued for the piston-cylinder module	nnnnnnnnn
Calibration report date	Date last calibartion report was issued	yyyymmdd
Make up mass value	True mass value of the 4.5 kg makeup mass	kg
0.1 kg mass group value	True mass of the 0.1 kg mass	kg
0.2 kg mass group values	True mass of each of the (2) 0.2 kg masses	kg
0.5 kg mass group value	True mass of the 0.2 kg mass	kg
1 kg mass group value	True mass of the 1 kg mass	kg
2 kg mass group values	True mass of each of the (2) 2 kg masses	kg
5 kg mass group values	True mass of each of the (5) 5 kg masses	kg

The mass loading bell and trim mass set are delivered with the MS-7001-35-AF mass set but they are not in the mass set digital ID. The mass loading bell has its own digital ID (see Section 4.5.1.11) and for the trim mass set the true mass is equal to nominal mass (see Section 4.1.5). Piston mass information is defined and stored in the piston-cylinder module digital ID (see Section 4.5.1.1).

원문: Fluke Calibration PG7601 메뉴얼(영문) · 제조사 원문 자료입니다. 사양은 제조사 사정에 따라 변경될 수 있습니다.

TS-TL-FLK-094

we measure, we calibrate, we validate.
KOLAS 국제공인교정기관 · ISO/IEC 17025

When PG7601-AF provides mass loading instructions and calculates the true mass of the mass currently loaded, it assumes that the mass set in use has been set up correctly and that masses have been loaded following PG7601-AF mass loading protocol (see Section 4.1.5). For PG7601-AF mass loading protocol to operate properly, the mass set in use must be EXACTLY the mass set that has been defined by the add and/or edit mass function. No extra mass can be included, no mass used can be missing and the sequential numbers of masses in each mass group must be followed with the correct true mass value entered for each individual mass. Using a mass set that is not accurately set up may result in out of tolerance pressure definitions.

❍ OPERATION

Mass set information is element specific metrological data. Uninformed or accidental altering of this information may lead to out of tolerance measurements. Mass set information should only be edited by qualified personnel as part of the PG7601-AF calibration or recalibration process.

To use the create or edit mass set function, it is important to have an understanding of mass set structure and mass groups. Consult Section 4.1.5, PRINCIPLE, to familiarize yourself with this information before attempting to create or edit a mass set.

PG7601-AF can store up to 3 MS (mass set) digital IDs. When <3add> is selected and all the digital ID records have already been used, a warning is displayed. A mass set digital ID must be deleted before one can be added.

Mass set digital IDs can be viewed, edited, uploaded and downloaded from a personal computer using CalTool for PG7000 software (see Section 7.4). For most users, CalTool is more convenient for this function than the PG Terminal front panel.

To create a new PG7601-AF mass set there are three sequential steps:

❶ Initialize mass set: Define serial number, density, mass set type (manual or AMH), calibration report number and date.

❷ Define individual masses: Edit, add and delete mass groups as necessary to identify and define all masses in the mass set.

❸ Save mass set digital ID or abandon changes.

Step ❶: Initialize Mass Set

Press **[SPECIAL]** , **<1PC/MS>**, **<2mass set>**, **<3add>**.

Edit the serial number to the number of the mass set being added and press **[ENTER].** The display is:

```
Add mass set:
S/N 1
```


© 2008 DH Instruments, a Fluke Company

원문: Fluke Calibration PG7601 메뉴얼(영문) · 제조사 원문 자료입니다. 사양은 제조사 사정에 따라 변경될 수 있습니다.

Edit the density of the masses being added (all MS-7001-35-AF masses have density of 8 000 kg/m3) and press **[ENTER]**. The display is:

```
Mass density:
8000 kg/m3
```

Select **<1manual>** for a manual mass set or **<2AMH>** for an automated mass handler mass set. The standard MS-7001-35-AF mass set is **<1manual>**. The display is:

```
Mass set type:
1manual 2AMH
```

Edit the calibration report number to the the number of the current calibration report of the mass set that is being added and press **[ENTER]**. The display is:

```
Cal report number?
1
```

Edit the calibration report date to the date of the current calibration report of the mass set that is being added (format must be YYYYMMDD) and press **[ENTER]**. **[ENTER]** leads to the second step of mass set adding or editing.

```
Cal report date?
19800101
```

Pressing **[ESCAPE]** at any point goes to an abandon edits warning screen. To continue with defining the mass set proceed to Step ❷.

Step ❷: Define Individual Masses

This step can only be reached by going through Step ❶.

The display is:

```
Select mass grp (kg)
MKUP 5.00 2.00 1.001↓
0.50 0.20 0.10 ADD
```

Some screens go beyond the two lines provided by the display. This is indicated by a flashing arrow in the second line of the display. Press [←] and [→] to move the cursor to access the lines that are NOT visible or directly enter the number of the hidden menu choice if you know it.

Refer to Sections 4.5.1.6, **PRINCIPLE** and 4.1.5 for information on mass group definitions. To create the mass set, each and every mass in the mass set, no more and no less, (but not the piston, the mass loading bell or the trim mass set) must be identified and its true mass entered. To select a mass group press **[←]** and **[→]** to position the cursor on the mass group to be edited. If the mass is needed but not shown, select **<ADD>** to create a new mass group. To delete a mass group, enter **<0>** as the number of masses in the group.

The standard PG7601-SYS-AF system MS-7001-35-AF mass set has a makeup mass (MKUP) of 4.5 kg. It is imperative that the make up mass be defined and entered in the MKUP group.

Operation within each mass group is identical, for example, select **<5.00>**. The display is:

원문: Fluke Calibration PG7601 메뉴얼(영문) · 제조사 원문 자료입니다. 사양은 제조사 사정에 따라 변경될 수 있습니다.

1. Edit field for number of masses in the mass group.

```
# of masses in group
(0 deletes grp):   1
```

1

Edit the number of masses in group to reflect the number of masses of that nominal value there are in the group and press **[ENTER]**. The display is:

1

1. Sequential ID number of this specific mass within the mass group.
2. Edit field for the true value of this specific mass.

```
5.0 kg mass #1
True mass:  5.00000
```

2

Edit the mass value to the true value of the specific mass identified and press **[ENTER]**.

If there are additional masses in this mass group, the next display is the same as the display immediately above but with the next mass specific mass sequential ID number in the mass group. The screens continue until the true value of each of the masses within the group has been entered. After the last entry, the screen returns to the **<Select mass grp>** screen.

Edit, add and delete mass groups as necessary until all of the masses in the mass set (do not include pistons, bells and trim masses of 50 grams and less) have been entered, no more, no less. When Step ❷ is completed, press **[ESCAPE]** to go to Step ❸.

Step ❸: Save Mass Set Digital ID

Pressing **[ESCAPE]** in the mass set editing screen goes to the save screen.

The display is:

```
Save MS S/N 4573
1no 2yes
```

Select **<2yes>** to save the all changes made to the mass set and exit. Select **<1no>** to abandon all changes made to the mass set and exit.

4.5.1.7 EDIT MASS SET

❍ **PURPOSE**

To edit an existing mass set digital ID.

After a recalibration, a digital ID file (.did) is normally delivered with the calibration report. CalTool for PG7000 software can be used to load the new digital ID into the PG7601-AF platform and update the calibration information without having to use the PG Terminal front panel (see Section 7.4).*

❍ **PRINCIPLE/OPERATION**

© 2008 DH Instruments, a Fluke Company

원문: Fluke Calibration PG7601 메뉴얼(영문) · 제조사 원문 자료입니다. 사양은 제조사 사정에 따라 변경될 수 있습니다.

we measure, we calibrate, we validate.
KOLAS 국제공인교정기관 · ISO/IEC 17025

A mass set digital ID contains element specific metrological data. Uninformed or accidental altering of this information may lead to out of tolerance measurements. Mass set information should only be edited by qualified personnel as part of the PG7601-AF calibration or recalibration process.

See Section 4.5.1.6 describing adding a new mass set. The principles and procedures to add or edit a mass set are identical except that the mass set to edit is selected from the existing mass sets screen.

The mass set type (manual or AMH) cannot be changed when a mass set is edited.

4.5.1.8 VIEW MASS SET

- **PURPOSE**

To view information contained in an existing mass set digital ID.

- **OPERATION**

To view information contained in an existing mass set digital ID press **[SPECIAL]** , **<1PC/MS>**, **<2mass set>**, **<1view>**. The viewing function operates in the same manner as the add function (see Section 4.5.1.6).

4.5.1.9 DELETE MASS SET

- **PURPOSE**

To delete an existing mass set digital ID entirely.

- **OPERATION**

Once a mass set digital ID has been deleted it can only be recreated by downloading it from CalTool for Pressure software (see Section 7.4) or the PG Terminal add mass set function must be used (see Section 4.5.1.1) which requires entering all the mass set information. Before deleting a mass set, consider editing it (see Section 4.5.1.2) and/or storing it using CalTool for PG7000 software.

To delete a mass set digital ID press **[SPECIAL]** , **<1PC/MS>**, **<2mass set>**, **<4delete>.** Select the mass set to be deleted and press **[ENTER]**. Select **<2yes>** to delete the mass set. Press **<1no>** to NOT delete.

4.5.1.10 SELECT MASS SET

- **PURPOSE**

To select a mass set to be active and used by PG7601-AF in its mass loading and defined pressure calculations. To initialize the optional AMH automated mass handler if present.

- **OPERATION**

To select the active mass set press **[SPECIAL]** , **<1PC/MS>**, **<2mass set>**, **<5select>**.

Put the cursor on the desired mass set and press **[ENTER]**.

4.5.1.11 ADD MASS LOADING BELL

- **PURPOSE**

To create a new mass loading bell digital ID.

원문: Fluke Calibration PG7601 메뉴얼(영문) · 제조사 원문 자료입니다. 사양은 제조사 사정에 따라 변경될 수 있습니다.

TS-TL-FLK-094

we measure, we calibrate, we validate.
㈜테솔 · www.tessol.com TS-TL-FLK-094 106 / 234
KOLAS 국제공인교정기관 · ISO/IEC 17025

If the mass loading bell and PG7601-AF platform were delivered together, the mass loading bell digital ID has normally already been created. Before creating a new bell, view mass bells to check if it already exists (see Section 4.5.1.13).

PRINCIPLE

The PG7601-AF functions to add and edit mass loading bell digital IDs allow mass bell variable values to be defined and stored. These values are used by PG7601-AF to calculate nominal mass instructions and true mass loads. Up to three mass bells can be created.

The values contained in a PG7601-AF mass loading bell digital ID are listed in Table 14.

Table 14. Mass loading bell digital ID fields

FIELD	DESCRIPTION	UNIT OF MEASURE
Serial number (S/N)	Factory assigned serial number. Numeric only	nnnn
Average density	Average density of the parts that make up the mass loading bell.	kg/m^3
Calibration report number	Number of last calibration report issued for the piston-cylinder module	nnnnn
Calibration report date	Date last calibartion report was issued	yyyymmdd
Mass value	True mass value of the mass loading bell.	kg

OPERATION

Mass loading bell information is element specific metrological data. Uninformed or accidental altering of this information may lead to out of tolerance measurements. Mass loading bell information should only be edited by qualified personnel as part of the PG7601-AF calibration or recalibration process.

PG7601-AF can store up to 3 mass bell digital IDs. When <3add> is selected and all the digital ID records have already been used, a warning is displayed. A mass loading bell digital ID must be deleted before a new one can be added.

Mass loading bell digital IDs can be viewed, edited, uploaded and downloaded from a personal computer using CalTool for PG7000 software (see Section 7.4). For most users, CalTool is more convenient for this function than the PG Terminal front panel.

To create a new PG7601-AF mass loading bell digital ID, press **[SPECIAL]**, **<1PC/MS>**, **<3mass bell>**, **<3add>**.

Edit the serial number to the number of the mass bell being added and press **[ENTER]**. The display is:

```
Add mass bell:
S/N 1
```

Edit the average mass density of the mass loading bell and press **[ENTER]**.

```
Mass density?
```


© 2008 DH Instruments, a Fluke Company

원문: Fluke Calibration PG7601 메뉴얼(영문) · 제조사 원문 자료입니다. 사양은 제조사 사정에 따라 변경될 수 있습니다.

The value defaults to the default density for the typical mass loading bell for the PG7601-AF model. The display is:

```
5058 kg/m3
```

Edit the calibration report number to the current calibration report number of the mass loading bell that is being added and press **[ENTER]**. The display is:

```
Cal report number?
1775
```

Edit the calibration report date to the date of the current calibration report of the mass loading bell that is being added and press **[ENTER]**. The display is:

```
Cal report date?
20040101
```

Edit the the true mass value of the mass loading bell that is being added and press **[ENTER]**. The value defaults to the nominal mass of the typical mass loading bell for the PG7601-AF model. The display is:

```
Bell #2832
True mass: 0.299985
```

Select **<2yes>** to save the all changes made to the mass loading bell and exit.

Select **<2no>** to abandon all changes made to the mass loading bell and exit.

```
Save bell S/N 2832?
1no 2yes
```

4.5.1.12 EDIT MASS LOADING BELL

- **PURPOSE**

To edit an existing mass loading bell digital ID.

- **PRINCIPLE/OPERATION**

Mass loading bell information is element specific metrological data. Uninformed or accidental altering of this information may lead to out of tolerance measurements. Mass loading bell information should only be edited by qualified personnel as part of the PG7601-AF calibration or recalibration process.

See Section 4.5.1.11 describing adding a new mass loading bell. The principles and procedures to add or edit a mass loading bell digital ID are identical except that the mass loading bell to edit is selected from the existing mass loading bell screen.

4.5.1.13 VIEW MASS LOADING BELL

- **PURPOSE**

To an existing mass loading bell digital ID.

- **OPERATION**

To view information contained in an existing mass loading bell digital ID press **[SPECIAL]**, **<1PC/MS>**, **<3mass bell>**, **<1view>**. The viewing function is identical to the add function (see Section 4.5.1.11).

4.5.1.14 DELETE MASS LOADING BELL

- **PURPOSE**

To delete an existing mass loading bell digital entirely.

- **OPERATION**

원문: Fluke Calibration PG7601 메뉴얼(영문) · 제조사 원문 자료입니다. 사양은 제조사 사정에 따라 변경될 수 있습니다.

Once a mass loading bell digital ID has been deleted it cannot be recovered. To recreate it, the add mass loading bell function must be used (see Section 4.5.1.11) which requires entering all the mass loading bell information. Before deleting a mass loading bell digital ID, consider editing it (see Section 4.5.1.12).

To delete a mass loading bell press **[SPECIAL]**, **<1PC/MS>** ,**<3mass bell>**, **<4delete>.**

Confirmation to delete is requested. Select **<2yes>** to delete the mass loading bell. Press **<1no>** to NOT delete.

4.5.1.15 SELECT MASS LOADING BELL

❍ PURPOSE

To select the mass loading bell that is active and used by PG7601-AF in its mass loading and defined pressure calculations.

❍ OPERATION

To select the active mass loading bell set press **[SPECIAL]**, **<1PC/MS>** ,**<3mass bell>**, **<5select>**.

4.5.2 <2PRESU>, CUSTOMIZE UNIT FUNCTION SELECTIONS

❍ PURPOSE

To customize the selection of pressure units that are available for selection from the **[UNIT]** function key (see Section 4.3.3).

❍ PRINCIPLE

The UNIT function provides a choice of different pressure units of measure. The units that are available by default are psi, kPa, inHg, mmHg, inWa, ft. However, PG7601-AF supports many other pressure units of measure. Other units can be made available for selection and units can be deleted by customizing the UNIT function. This allows PG7601-AF to offer a very wide selection of units while simplifying day to day operation.

❍ OPERATION

To customize the **[UNIT]** function key, from the MAIN run screen press **[SETUP]**, **<2PresU>**. The display is:

1. The UNIT number in the **[UNIT]** menu that is to be changed.

```
                                   1
                                   ↓
Set up user unit #6
```

Enter the number of the unit position that you would like to change. The display becomes:

```
Unit #6   1SI 2other
3altitude 4user
```

Select the desired pressure unit category. SI units include units *based* on SI such as mmHg. Select the desired unit from the unit list (see Table 15).

Table 15. Pressure units of measure available

<1SI>	<2Other>	<3altitude>*	<4User>**

© 2008 DH Instruments, a Fluke Company

원문: Fluke Calibration PG7601 메뉴얼(영문) · 제조사 원문 자료입니다. 사양은 제조사 사정에 따라 변경될 수 있습니다.

we measure, we calibrate, we validate.
KOLAS 국제공인교정기관 · ISO/IEC 17025

<1Pa> <2Kpa> <3MPa> <4mbar> <5bar> <6mmHg> <7mmWa>	<1psi> <2psf> <3inHg> <4inWa> <5kcm2> <6Torr> <7mTor> <8none>	<1ft> <2m>	<1user>

*** <3altitude>:** Absolute by vacuum mode only.
** **<4user>:** User defined unit.

The UNIT function display is not required to display six units. To delete the current unit from the UNIT screen and show no unit, select **<2other>**, **<8none>** for that unit number.

If **<4user>** was selected, the user unit must be defined. The display is:

```
Define user unit:
1.000000 Units/Pa
```

1. Entry field.

Enter the number of user units per Pascal [Pa] in the entry field. Pressing **[ENTER]** defines the user unit and returns to the **<Set up unit #>** screen.

See Section 9.1.1 for the pressure unit of measure conversion factors used by PG7601-AF.

The user defined unit can be assigned a user defined label using the UDU remote command (see Section 5.3.4.2).

4.5.3 <3HEAD>, CUSTOMIZE FLUID HEAD FUNCTIONS

PURPOSE

To change DUT head configuration and change the ATM head height.

PRINCIPLE

PG7601-AF supports three different fluid head correction functions.

1. **DUT head:** There is a correction to consider the difference in height between the PG7601-AF reference level and a device under test (see Section 4.3.7, PRINCIPLE). This head correction is referred to as DUT head. The head height can be adjusted using **[HEAD]** (see Section 4.3.7). The head unit of measure and fluid are adjusted using **[SPECIAL]**, **<3head>**, **<1fluid>** and **<2unit>**.
2. **ATM head:** There is a head correction for the PG7601-AF reading of atmospheric pressure used to calculate air density and/or to add to atmospheric pressure in absolute by adding atmosphere mode. The barometer reading atmospheric pressure may not be at the same height as the piston reference level and, if not, a head correction is needed to determine atmospheric pressure at the piston reference level. This head correction is referred to as ATM head. The ATM head height can be edited using **[SPECIAL]**, **<3head>**, **<3atm>**. The ATM head is only applied to internal or external barometer readings. It is not applied to normal or user values of atmospheric pressure.
3. **PISTON head:** The third head function is the automated correction for the piston position, referred to as PISTON head. The PG7601-AF reference level marked on the piston-cylinder module mounting post is the level at which pressures are defined when the piston is in midstroke position. But it may not always be practical to make measurement with the piston exactly in its midstroke position. In fact, the piston position is *Ready* within a limit

원문: Fluke Calibration PG7601 메뉴얼(영문) · 제조사 원문 자료입니다. 사양은 제조사 사정에 따라 변경될 수 있습니다.

we measure, we calibrate, we validate.
㈜테솔 · www.tessol.com TS-TL-FLK-094 110 / 234
KOLAS 국제공인교정기관 · ISO/IEC 17025

TS-TL-FLK-094

band above and below midstroke (see Section 4.1.3.1). As the piston moves away from midstroke, the pressure definition reference level moves proportionally. PG7601-AF's automated correction for piston position calculates the head pressure corresponding to the deviation in piston position from midstroke and compensates the defined pressure back to midstroke. In this way, the defined pressure calculated by PG7601-AF is always the pressure at the reference level marked on the mounting post, even if the piston is not at midstroke position. The PISTON head function can be turned ON and OFF using **[SPECIAL]**, **<3head>**, **<4piston>**.

See Section 9.2.2 for information on calculation of the three fluid head correction functions.

❍ **OPERATION**

To access various fluid HEAD functions press **[SPECIAL]**, **<3head>**. The display is:

```
Edit head: 1fluid
2unit 3atm 4piston
```

Head menu choices include:

<1fluid>: Change the DUT head fluid (see Section 4.5.3.1).

<2unit>: Specify the DUT head height unit of measure (see Section 4.5.3.2).

<3atm>: Adjust the ATM head height (see Section 4.5.3.3).

<4piston>: Turn the PISTON head correction ON and OFF (see Section 4.5.3.4).

4.5.3.1 <3HEAD>, <1FLUID>

❍ **OPERATION**

To specify the DUT head fluid (see Section 4.5.3, PRINCIPLE), press **[SPECIAL]**, **<3head>**, **<1fluid>**. The display is:

```
Head fluid:
1gas 2liquid
```

If **<1gas>** is selected, the display offers the choice of three gasses. Making a gas selection returns to the previous run screen with that gas active for the DUT head function.

```
Gas type:
1N2 2He 3Air
```

If **<2liquid>** is selected, the display offers the choice of oil, water or a user defined liquid. If the user defined liquid is selected, its density must be specified. Making a liquid selection returns to the previous run screen with that liquid active for the DUT head function.

```
Liquid type:
1oil 2H20 3user
```

In systems using fluid interfaces, the head fluid selected should be the medium used in the height separating the P7601-AF reference level from the device under test.

4.5.3.2 <3HEAD>, <2UNIT>

❍ **OPERATION**

To specify the DUT and ATM head height unit (see Section 4.5.3, PRINCIPLE), press **[SPECIAL]**, **<3head>**, **<2unit>**. The display is:

```
Head height unit:
1in 2cm
```


© 2008 DH Instruments, a Fluke Company

원문: Fluke Calibration PG7601 메뉴얼(영문) · 제조사 원문 자료입니다. 사양은 제조사 사정에 따라 변경될 수 있습니다.

TS-TL-FLK-094

we measure, we calibrate, we validate.
KOLAS 국제공인교정기관 · ISO/IEC 17025
㈜테솔 · www.tessol.com TS-TL-FLK-094 111 / 234

Selecting the desired unit returns to the previous run screen with that unit active for the DUT and ATM head function heights.

4.5.3.3 <3HEAD>, <3ATM>

OPERATION

To specify the ATM head height (see Section 4.5.3, PRINCIPLE), press **[SPECIAL]**, **<3head>**, **<3atm>**. The display is:

```
Edit ATM head unit:
-10.00 cm
```

Entering the ATM head returns to the previous run screen with the new height active.

The correct head height when using the PG7601-AF internal barometer as the source for atmospheric pressure measurements (see Section 4.4) is -10.00 cm (-3.94 in.).

The ATM head height is negative if the barometer is below the PG7601-AF reference level and positive if the barometer is above the reference level. The ATM head fluid is air and it cannot be changed. The ATM head height unit is set using [SPECIAL], <3head>, <2unit>. The default ATM head height is -10 cm, which is the difference in height between the PG7601-AF reference level and its internal barometer.

4.5.3.4 <3HEAD>, <4PISTON>

OPERATION

To turn the PISTON head correction function ON and OFF (see Section 4.5.3, PRINCIPLE), press **[SPECIAL]**, **<3head>**, **<4piston>**.

Select **<1on>** to turn the PISTON head correction function ON so that a head correction for piston position IS automatically applied.

Select **<2off>** to turn the PISTON head correction function OFF so that a head correction for piston position IS NOT applied.

The PISTON head is automatically turned OFF (has no effect) in gauge measurement mode when the set pressure is zero (system vented). When the system is vented, the piston position no longer affects the head.

4.5.4 <4PREFS>, SET USER PREFERENCES

PURPOSE

To access a menu of PG7601-AF internal operational preferences and functions including screen saver, sounds, time and date, instrument ID and user protection levels.

OPERATION

To access the PREFS menu press **[SPECIAL]**,, **<4prefs>**. The display is:

```
1ScrSvr 2sound 3time
4ID 5level
```

Prefs menu choices include:

원문: Fluke Calibration PG7601 메뉴얼(영문) · 제조사 원문 자료입니다. 사양은 제조사 사정에 따라 변경될 수 있습니다.

we measure, we calibrate, we validate.
KOLAS 국제공인교정기관 · ISO/IEC 17025

<1ScrSvr>: View and change the screen saver function (see Section 4.5.4.1).

<2sounds>: View and change keypad press and piston position sound settings (see Section 4.5.4.2).

<3time>: View and edit the internal time and date settings (see Section 4.5.4.3).

<4ID>: View and edit the PG7601-AF user ID (see Section 4.5.4.4).

<5level>: View and edit user protection levels and password (see Section 4.5.4.5).

4.5.4.1 <4PREFS>, <1SCRSVR>

- **PURPOSE**

To adjust the time of inactivity after which PG7601-AF's SCREEN SAVER function activates or to turn off the screen saver function.

- **PRINCIPLE**

PG7601-AF has a SCREEN SAVER function which causes the display to dim after a front panel key is NOT pressed for a certain amount of time. The default time activates the screen saver after 10 minutes. The time can be adjusted by the user or screen saving can be disabled.

- **OPERATION**

To access the SCREEN SAVER function, press **[SPECIAL]**, **<4prefs>**, **<1ScrSav>**. Edit the time, in minutes, after which the screen saver will activate to dim the screen. Set zero to disable the SCREEN SAVER function.

Setting the screen saver time to zero disables the screen saver function so that the display remains permanently at full brightness.

4.5.4.2 <4PREFS>, <2SOUND>

- **PURPOSE**

To adjust the key press sounds and turn piston position sounds ON and OFF.

- **PRINCIPLE**

PG7601-AF provides audible feedback of valid and invalid key presses and of when the piston leaves the high or low stop position (see Section 4.1.4). Key press sounds can be adjusted in frequency or turned OFF completely. Piston position sounds may be turned ON and OFF.

- **OPERATION**

To access the audible feedback adjustment function, press **[SPECIAL]**, **<4prefs>**, **<2sound>**.

Select **<1keypad>** to adjust keypad sounds. Select **<2piston>** to turn the position sounds ON or OFF.

4.5.4.3 <4PREFS>, <3TIME>

- **PURPOSE**

To view and edit the PG7601-AF internal time and date settings.

© 2008 DH Instruments, a Fluke Company

원문: Fluke Calibration PG7601 메뉴얼(영문) · 제조사 원문 자료입니다. 사양은 제조사 사정에 따라 변경될 수 있습니다.

we measure, we calibrate, we validate.
㈜테솔 · www.tessol.com TS-TL-FLK-094 113 / 234
KOLAS 국제공인교정기관 · ISO/IEC 17025

TS-TL-FLK-094

❍ **OPERATION**

To access the time function press **[SPECIAL]**, **<4prefs>**, **<3time>**. The display is:

```
Edit: 1time 2date
08:32:11 am 20060815
```

Select **<1time>** to edit the time. Edit hours, then minutes, then am/pm by pressing **[ENTER]** at each entry. Seconds go to zero when minutes are entered.

Select **<2date>** to edit the date. The date must be specified in YYYYMMDD format.

The PG7601-AF date and time are set to United States Mountain Standard Time in the final test and inspection process at the factory. If desired, use the date function to set your local time and date.

4.5.4.4 <4PREFS>, <4ID>

❍ **PURPOSE**

To view or edit the PG7601-AF user ID and to view the serial number.

❍ **PRINCIPLE**

PG7601-AF has a factory programmed serial number that is included on the product label on the rear of the platfomr and can be viewed in the introductory screen.

PG7601-AF also allows the user to store one unique, twelve character, alpha numeric ID number. This feature is frequently used to assign an organizational control ID such as an asset number, tool number, standard number, etc. The ID function allows the ID number to be viewed and edited. It also displays the PG7601-AF factory serial number.

❍ **OPERATION**

To access the ID function press **[SPECIAL]**, **<4prefs>**, **<4ID>**. Select **<1view>** to view the current ID.

Select **<2edit>** to edit the ID.

The ID has twelve characters. When the edit screen is opened, the cursor is on the first character. Numerical values can be entered directly from the keypad. In addition, **[←]** and **[→]** can be used to toggle through a list of available alpha numeric characters. Holding the key steps through the characters. Character order going up (**[→]**) is: *blank space, symbols, lower case letters, upper case letters, numbers*. Press **[ENTER]** to select a character and move to the next character.

When a character is selected the cursor moves to the next character. To leave a blank character, press **[ENTER]** with the field for that character blank. Press **[ESCAPE]** when all ID characters have been entered to access the **<Save ID?>** option. Select **<1no>** to abandon edits and exit or select **<2yes>** to save the edited ID.

The ID can be viewed and edited but it cannot be cleared or reset by any reset functions (see Section 4.5.9).

원문: Fluke Calibration PG7601 메뉴얼(영문) · 제조사 원문 자료입니다. 사양은 제조사 사정에 따라 변경될 수 있습니다.

TS-TL-FLK-094

we measure, we calibrate, we validate.
KOLAS 국제공인교정기관 · ISO/IEC 17025

4.5.4.5 <4PREFS>, <5LEVEL>

PURPOSE

To set user protection levels that restrict access to certain functions and to edit the password required for changing User Levels.

PRINCIPLE

PG7601-AF's front panel user interface provides the means to access all PG7601-AF user defined data, settings and functions including calibration data. Inadvertent, uninformed or unauthorized altering or deleting of data, settings and functions could require extensive reconfiguration by the user and might cause invalid readings. For these reasons, depending upon the application in which PG7601-AF is being used, it may be desirable to restrict access to certain functions. The USER LEVEL function provides a means of restricting access to certain functions. Four different levels of security are available: none, low, medium and high.

Access to changing security levels can be left open, or be protected by a password so that security levels can be used as a convenient way to avoid accidental changing of data or as a secured means of preventing tampering with PG7601-AF settings.

The security levels are structured to support typical operating environments as follows:

None This level is intended for use only by the system manager and/or calibration facility. It allows access and editing in all areas including critical metrological information and other settings that affect measurement integrity.

Low Low security is designed to protect the specific metrological information and system diagnostic and maintenance functions of the system against accidental alteration. It is intended for an advanced operator performing many different tasks. Low security is the default User Level setting.

Medium Medium security is designed to protect specific metrological information in the system and to ensure that PG7601-AF is operated using consistent operational parameters.

High High security protects all operating parameters. It is intended to minimize operator choices (e.g., to perform repeated identical tests under consistent conditions).

PG7601-AF is delivered with the security level set to low to avoid inadvertent altering of critical internal settings but with unrestricted access to changing security level setting. It is recommended that the low security level be maintained at all times and password protection be implemented if control over setting of security levels is desired.

If there is a risk of unauthorized changing of the security level, changing authority should be password protected (see OPERATION of this section).

The High security level disables remote communications and returns an error message ("ERROR") to all remote commands. All other security levels have NO effect on remote communications.

© 2008 DH Instruments, a Fluke Company

원문: Fluke Calibration PG7601 메뉴얼(영문) · 제조사 원문 자료입니다. 사양은 제조사 사정에 따라 변경될 수 있습니다.

we measure, we calibrate, we validate.
㈜테솔 · www.tessol.com TS-TL-FLK-094 115 / 234
KOLAS 국제공인교정기관 · ISO/IEC 17025

TS-TL-FLK-094

The security levels are structured to support typical levels of operation. Specifically, the security level **prevents** execution of the functions marked by "•":

Table 16. Security levels - functions NOT executed per function/level

FUNCTION	LOW	MEDIUM	HIGH
[P-C]			•
[UNIT]			•
[MODE]			•
[SYSTEM]			•
[AMBIENT]			•
[HEAD]		•	•
[ROTATE]			•
[GEN]			•
[RES] (change setting)		•	•
[P OR M]		•	•
[SETUP], <1select>		•	•
[SETUP], <2view>			•
[SETUP], <3edit>		•	•
[SPECIAL], <1PC/MS>, <any selection>, <1view>			•
[SPECIAL], <1PC/MS>, <any selection>, <2edit>	•	•	•
[SPECIAL], <1PC/MS>, <any selection>, <3add>	•	•	•
[SPECIAL], <1PC/MS>, <any selection>, <4delete>	•	•	•
[SPECIAL], <1PC/MS>, <1PC>, <5select>			•
[SPECIAL], <1PC/MS>, <2mass set>, <5select>		•	•
[SPECIAL], <1PC/MS>, <2mass bell>, <5select>		•	•
[SPECIAL], <2presU>		•	•
[SPECIAL], <3head>		•	•
[SPECIAL], <4prefs>		•	•
[SPECIAL], <4prefs>, <3time> (make changes)	•	•	•
[SPECIAL], <4prefs>, <4ID>, <2edit>	•	•	•
[SPECIAL], <6remote> (access)			•
[SPECIAL], <6remote> (make changes)		•	•
[SPECIAL], <5prefs>, <3time> (make changes)	•	•	•
[SPECIAL], <6gl> (access)	•	•	•
[SPECIAL], <7cal>, (access)			•
[SPECIAL], <7cal>, <any selection except 5Pposition>, <2cal>	•	•	•
[SPEICAL], <8AMH>, <any selection>		•	•
[SPECIAL], <9reset>		•	•
[SPECIAL], <9reset>, <1sets>	•	•	•
[SPECIAL], <9reset>, <3com>	•	•	•
[SPECIAL], <9reset>, <4cal>	•	•	•
[SPECIAL], <9reset>, <5setups>	•	•	•
[SPECIAL], <9reset>, <6all>	•	•	•
Remote communications disabled			•

원문: Fluke Calibration PG7601 메뉴얼(영문) · 제조사 원문 자료입니다. 사양은 제조사 사정에 따라 변경될 수 있습니다.

OPERATION

PG7601-AF is delivered with NO active password so access to the User Level menu is open. The User Level is set to <1Low>. User Levels can be changed freely until a password has been created. Reset functions (see Section 4.5.9) do not affect the password setting.

To access the User Level function, press **[SPECIAL]**, **<4prefs>**, **<5level>**.

If NO password yet exists or if the correct password has been entered, the display is:

```
1change user level
2edit password
```

Selecting **<1change user level>** brings up the restriction menu:

```
Restriction: 1none
2low 3medium 4high
```

You can then select the current restriction level, or press **[ESCAPE]** to return to the MAIN run screen.

Selecting **<2edit password>** displays the user password and allows it to be edited. Passwords can be up to six numbers in length and cannot start with a zero.

```
Password: pppppp
0 disables password
```

If **0** is entered as the password value, then the password is made inactive and a password is NOT be required to access the User Level menu. This is the factory default with a security level of **<2low>**.

Once a password has been entered, the User Level cannot be changed without reentering the password.

If there is an active password, the PG7601-AF password entry screen appears.

```
PG7601-AF NS nnn-xx
Password: pppppp
```

The user must enter the user defined password or the factory **secondary** password to proceed. When a password is entered correctly, operation proceeds to the **<1change user level 2edit password>** screen.

The first field, ***<nnnn>,*** is the serial number of PG7601-AF, followed by a second field, ***<xx>.*** That counts the number of times that a **secondary** password has been used. This second field increments each time a **secondary** password is used. The third field, ***<pppppp>***, is for normal password entry.

The factory ***secondary*** password is available in case the user's password has been misplaced or forgotten. It can be obtained by contacting a **DHI** Authorized Service Provider. The factory ***secondary*** password is different for all PG7601-AF's and changes each time it is used.

4.5.5 <5REMOTE>, MANAGE REMOTE COMMUNICATION INTERFACES

PURPOSE

To configure the PG7601-AF COM1, COM2, COM3 and IEEE-488 communication ports. To test COM1, COM2 and COM3 communications.

© 2008 DH Instruments, a Fluke Company

원문: Fluke Calibration PG7601 메뉴얼(영문) · 제조사 원문 자료입니다. 사양은 제조사 사정에 따라 변경될 수 있습니다.

we measure, we calibrate, we validate.
㈜테솔 · www.tessol.com TS-TL-FLK-094 117 / 234
KOLAS 국제공인교정기관 · ISO/IEC 17025

TS-TL-FLK-094

❍ PRINCIPLE

PG7601-AF has three RS232 communications ports referred to as COM1, COM2 and COM3 and a single IEEE-488 port. COM1 and the IEEE-488 port are for communicating with a host computer (see Section 5). COM2 is for communicating with an external barometer and/or vacuum gauge (not included in PG7601-SYS-AF system) or for pass through commands to an RS232 device. COM3 is for communications with the PPC3-7M-AF pressure controller (see Section 4.3.9) and/or an AMH automated mass handler (not included in PG7601-SYS-AF system). The communication ports can be set up from the PG7601-AF front panel.

PG7601-AF provides a self-test for its RS232 communication ports. The self-test allows verification that the PG7601-AF RS232 ports (COM1, COM2, COM3) are operating properly and that a valid interface cable is being used (see Section 4.5.5.3).

❍ OPERATION

To access the port communications settings, press **[SPECIAL]**, **<5remote>**. Select **<1COM1>**, **<2COM2>**, **<3COM3>** or **<4IEEE-488>** to view and edit that port's communications settings (see Section 5.2.1 for information on COM port settings). Selecting **<2COM2>** includes the choice to set up external barometer and/or vacuum gauge communications as well as the port's communications settings. Select **<1settings>** to view and edit COM2 communications settings. Select **<2baro>** to view and edit external barometer communications settings (see Section 4.5.5.4). Select **<3vac>** to view and edit external vacuum gauge settings (see Section 4.5.5.5).

To access the RS232 self-test press **[SPECIAL]**, **<5remote>**, **<5RS232test>**.

4.5.5.1 COM1, COM2 AND COM3 (RS232)

The COMx ports can be set for the specific settings required by the user. The settings are baud rate, parity, data bits and stop bits. The available options are listed in Table 17.

Table 17. COM1, COM2 and COM3 available settings

BAUD RATE	300, 600, 1 200, 2 400, 4 800, 9 600, 19 200
PARITY	NONE, ODD or EVEN
DATA BITS	7 or 8
STOP BITS	1 or 2
TERMINATORS	<CR><LF> or <LF><CR>

The default COMx settings are **2400, E, 7,1, <CR> <LF>** or **<LF> <CR>** for all three COM ports.

PG7601-AF appends a carriage return (**<CR>**) and a line feed (**<LF>**) or **<LF> <CR>** to all messages that are sent out of the COM1 port to the host. It looks for a carriage return to terminate incoming messages and ignores line feeds. The user MUST wait for a reply to each message sent to PG7601-AF before sending another message to it (see Section 5.3).

4.5.5.2 IEEE-488

The IEEE-488 port address can be defined from 1 to 31. The default address is **10**.

PG7601-AF sends a line feed (**<LF>**) and asserts the EOI line at the end of all transmitted messages. It looks for a line feed and/or assertion of the EOI line to terminate incoming messages.

원문: Fluke Calibration PG7601 메뉴얼(영문) · 제조사 원문 자료입니다. 사양은 제조사 사정에 따라 변경될 수 있습니다.

TS-TL-FLK-094

we measure, we calibrate, we validate. ㈜테솔 · www.tessol.com TS-TL-FLK-094 118 / 234

KOLAS 국제공인교정기관 · ISO/IEC 17025

4.5.5.3 RS232 SELF TEST

The RS232 self-test is provided to check the PG7601-AF COM ports and the interface cable independently of an external device or computer.

If you are having difficulty communicating with PG7601-AF from a host computer using RS232, the RS232 self test can help establish that the PG7601-AF COM1 port you are trying to communicate with and the interface cable you are using are good.

To run a self test of the RS232 ports (COM1 and COM2 or COM1 and COM3), press **[SPECIAL]**, **<5remote>**, **<5RS232test>**. Then select **<1COM2>** to test COM1 and COM2 or **<2COM3>** to test COM1 and COM3.

The display prompts you to connect COM1 to COM2 or COM1 to COM3 using a standard pin-to-pin DB-9F to DB-9M RS232 cable (see Section 5.2.1).

Once the cable has been installed, press **[ENTER]** to run the self-test. The test is first executed in the COM1→COM2 (or COM3) direction and then in the COM2 (or COM3) →COM1 direction.

If the COM1→COM2 (or COM3) test passes: <PASSED> displays briefly and the test proceeds to COM2 (or COM3) →COM1.

If COM2 (or COM3) →COM1 passes: <PASSED> is displayed briefly followed by the conclusion, **<PG7601-AF RS232 test has PASSED>**.

If a test fails: Execution is suspended until **[ENTER]** is pressed.

The PG7601-AF RS232 test can fail for three reasons:

1. *The RS232 cable being used is incorrect (see Section 5.2.1, for information on the correct cable).*
2. *COM1 and COM2 (or COM3) do NOT have the same serial communications settings and therefore cannot communicate together (see Section 4.5.5.1 to set the COM ports).*
3. *One of the COM ports is defective.*

The reason for failed communications is almost always a cable or incorrect RS232 interface settings. Be sure that these are correct before concluding that a COM port is defective.

4.5.5.4 EXTERNAL BAROMETER (RPM) COMMUNICATIONS (COM2)

❍ PURPOSE

To set up communications with an external barometer from which PG7601-AF will read the value of atmospheric pressure used in its internal calculations.

There is no external barometer included in the PG7601-SYS-AF system.

© 2008 DH Instruments, a Fluke Company

원문: Fluke Calibration PG7601 메뉴얼(영문) · 제조사 원문 자료입니다. 사양은 제조사 사정에 따라 변경될 수 있습니다.

we measure, we calibrate, we validate.
㈜테솔 · www.tessol.com TS-TL-FLK-094 119 / 234
KOLAS 국제공인교정기관 · ISO/IEC 17025

TS-TL-FLK-094

The source of the values of atmospheric pressure used by PG7601-AF in its internal calculations is determined by the AtmP setting in the current SETUP file (see Section 4.4). Setting up communications with an external barometer does NOT set PG7601-AF to utilize the external barometer.

PRINCIPLE

PG7601-AF uses atmospheric pressure values in its calculations of reference pressure (see Section 9.2.1). The source of the value is determined by the AtmP setting in the current SETUP file (see Section 4.4). One of the possible sources is *COM2*, which allows an external barometer, connected to PG7601-AF's COM2 RS232 port to be read automatically to obtain the atmospheric pressure values that are used. In order to communicate with an the external barometer PG7601-AF's COM2 must be properly set up. This setup occurs by pressing **[SPECIAL]** and selecting **<5remote>**, **<2COM2>**, **<2baro>**.

OPERATION

To set up PG7601-AF's COM2 port to communicate with an external barometer, press **[SPECIAL]**, **<5remote>**, **<2COM2>**, **<2baro>**. Select **<1RPMx>** if the external barometer is a **DHI** RPM. Select **<2user>** to set up communications with a barometer other than a **DHI** RPM.

Setting Up for User Barometer Communications

For a remote barometer to be able to be used for automated atmospheric pressure readings on PG7601-AF COM2, the following requirements apply to the remote barometer's communications:

- *Replies to a request to send string within 2 seconds.*
- *Accepts <CR, LF> terminators.*
- *Supplies <CR> or <CR, LF> terminators.*
- *Request to send string must be printable alphanumeric (no control modes or nulls).*

After pressing **[SPECIAL]** and selecting **<5remote>**, **<2COM2>**, **<2baro>**, **<2user>**, the display is:

```
COM2 meas req string
```

The string value is entered on the second line. It may have up to 20 characters. When the string screen is opened, the cursor is on the first character. Numerical values can be entered directly from the keypad. In addition, **[←]** and **[→]** can be used to toggle through a list of available alpha numeric characters. Holding the key steps through the characters. Character order going up (**[→]**) is: *blank space, symbols, lower case letters, upper case letters, numbers*. Press **[ENTER]** to select a character and move to the next character. When a character is selected the cursor moves to the next character. To leave a character blank, press **[ENTER]** with the field for that character blank. After the last character has been entered, press **[ESCAPE]**. This causes a **<Save edits?>** screen to appear. Select **<2yes>** to save the edited string and move to the next screen. Select **<1no>** abandon the edits. Also, if **[ENTER]** is pressed on the 20th character, the string is saved automatically and operation advances to the next screen.

원문: Fluke Calibration PG7601 메뉴얼(영문) · 제조사 원문 자료입니다. 사양은 제조사 사정에 따라 변경될 수 있습니다.

TS-TL-FLK-094

we measure, we calibrate, we validate.
㈜테솔 · www.tessol.com TS-TL-FLK-094 120 / 234
KOLAS 국제공인교정기관 · ISO/IEC 17025

The external barometer parameters including the communication string can also be set by remote command, which is more convenient than front panel entry (see Section 5.3.4.2, "UDD" command).

After the string value has been entered the display is:

```
Reply conv coef:
1.000000 Pa/unit
```

<conv coef> is the conversion coefficient that PG7601-AF will use to convert readings from the external barometer to the pressure unit of measure Pascal **[Pa]**. If the readings from the external barometer are NOT Pascal, edit the conversion coefficient value as needed to convert the readings to Pascal.

When the conversion coefficient is entered the next setup screen is opened. The display is:

```
Leading characters to
Strip: 0
```

This entry specifies the leading characters in the return string that precede the numerical value of the pressure. PG7601-AF will strip the specified number of characters from the front of the return string and assume that the next character is the first number defining the current value of atmospheric pressure.

To verify whether external barometer communications have been set up properly, select a SETUP file that specifies COM2 under AtmP (see Section 4.4) and verify that communications with the external barometer are achieved. Then view current barometer readings in the AMBIENT run screen (see Section 4.3.6) and verify that the readings are correct. Note that a fluid head correction should be set if the external barometer is not at the PG7601-AF reference level. This correction may cause the reading of the external barometer and the value of ambient pressure indicated by the PG7601-AF to not be identical (see Section 9.2.2.1).

For communications with an external barometer on COM2 to be established properly, the inquiry string to send to the barometer must be defined following this section and the PG7601-AF COM2 port and barometer COM port must have the same communications settings. Press [SPECIAL], <5remote>, <2COM2>, <1settings> to set up PG7601-AF COM2 communications settings. When unable to establish communications between COM2 and the external barometer, consider using the PG7601-AF RS232 self test to verify COM2 operation (see Section 4.5.5.3). If both a barometer and a vacuum gauge are connected, the barometer must always be the first device connected to the PG7601-AF platform COM2.

4.5.5.5 EXTERNAL VACUUM GAUGE COMMUNICATIONS (COM2)

❍ PURPOSE

To set up communications with an external vacuum gauge from which PG7601-AF will read the value of reference vacuum under the bell jar used in the calculation of absolute pressure in absolute by vacuum measurement mode (see Section 4.3.4).

There is no external vacuum gauge included in the PG7601-SYS-AF system.

© 2008 DH Instruments, a Fluke Company

원문: Fluke Calibration PG7601 메뉴얼(영문) · 제조사 원문 자료입니다. 사양은 제조사 사정에 따라 변경될 수 있습니다.

we measure, we calibrate, we validate.
㈜테솔 · www.tessol.com TS-TL-FLK-094 121 / 234
KOLAS 국제공인교정기관 · ISO/IEC 17025

TS-TL-FLK-094

The source of the value of vacuum pressure used by PG7601-AF in its internal calculations is determined by the Vac setting in the current SETUP file (see Section 4.4). Setting up communications with an external vacuum gauge does NOT set PG7601-AF to utilize the external vacuum gauge.

PRINCIPLE

PG7601-AF uses a value of reference vacuum under the bell jar in its calculation of the pressure defined by the PG in absolute by vacuum measurement mode (see Section 9.2.1). The source of the value is determined by the Vac setting in the current SETUP file (see Section 4.4). One of the possible sources is *COM2*, which allows an external vacuum gauge, connected to PG7601's COM2 RS232 port to be read automatically to obtain the reference vacuum values that are used. In order to communicate with the external vacuum gauge, PG7601's COM2 must be properly set up. This setup occurs by pressing **[SPECIAL]** and selecting **<5remote>**, **<2COM2>**, **<3vac>**.

If a DHI RPM is being used on COM2 for external measurement of barometric pressure, the vacuum gauge may be connected to COM2 of the RPM. In this case, COM2 of the RPM barometer must be set to have the same communication settings as the external vacuum gauge. If both a barometer and a vacuum gauge are connected, the barometer must always be the first device connected to the PG7601-AF platform COM2.

OPERATION

To set up PG7601's COM2 port to communicate with an external vacuum gauge, press **[SPECIAL]**, **<5remote>**, **<2COM2>**, **<3vac>**. Select **<1RPMx>** if the external barometer is a **DHI** RPM. Select **<2user>** to set up communications with a vacuum gauge other than a **DHI** RPM.

Setting Up for User Vacuum Gauge Communications

For an external vacuum gauge to be able to be used for automated reference vacuum readings on PG7601-AF COM2 or a DHI RPM's COM2, the following requirements apply to the remote vacuum gauge's communications:

- Replies to a request to send string within 2 seconds.
- Accepts <CR, LF> terminators.
- Supplies <CR> or <CR, LF> terminators.
- Request to send string must be printable alphanumeric (no control modes or nulls).

After pressing **[SPECIAL]** and selecting **<5remote>**, **<2COM2>**, **<3vac>**, **<2user>**, the display is:

```
COM2 meas req string
```

The string value is entered on the second line. It may have up to 20 characters.

원문: Fluke Calibration PG7601 메뉴얼(영문) · 제조사 원문 자료입니다. 사양은 제조사 사정에 따라 변경될 수 있습니다.

When the string screen is opened, the cursor is on the first character. Numerical values can be entered directly from the keypad. In addition, **[←]** and **[→]** can be used to toggle through a list of available alpha numeric characters. Holding the key steps through the characters. Character order going up (**[→]**) is: *blank space, symbols, lower case letters, upper case letters, numbers*. Press **[ENTER]** to select a character and move to the next character. When a character is selected the cursor moves to the next character. To leave a character blank, press **[ENTER]** with the field for that character blank. After the last character has been entered, press **[ESCAPE]**. This causes a **<Save edits?>** screen to appear. Select **<2yes>** to save the edited string and move to the next screen. Select **<1no>** abandon the edits. Also, if **[ENTER]** is pressed on the 20th character, the string is saved automatically and operation advances to the next screen.

The external vacuum gauge parameters including the communication string can also be set by remote command which is more convenient than front panel entry (see Section 5.3.4.2, "UDV" command).

After the string value has been entered the display is:

```
Reply conv coef:
1.000000 Pa/unit
```

<conv coef> is the conversion coefficient that PG7601-AF will use to convert readings from the external vacuum gauge to the pressure unit of measure Pascal **[Pa]**. If the readings from the external vacuum gauge are NOT Pascal, edit the conversion coefficient value as needed to convert the readings to Pascal.

When the conversion coefficient is entered the next setup screen is opened. The display is:

```
Leading characters to
Strip: 0
```

This entry specifies the leading characters in the return string that precede the numerical value of the pressure. PG7601-AF will strip the specified number of characters from the front of the return string and assume that the next character is the first number defining the current value of reference vacuum.

To verify whether external vacuum gauge communications have been set up properly, select a SETUP file that specifies COM2 under Vac (see Section 4.4) and verify that communications with the external vacuum gauge are achieved. Then view current vacuum readings in the AMBIENT run screen (see Section 4.3.6) and verify that the readings are correct.

For communications with an external vacuum gauge on COM2 to be established properly, the inquiry string to send to the vacuum gauge must be defined following this section and the PG7601-AF COM2 port and vacuum gauge COM port must have the same communications settings (or if the vacuum gauge is connected to COM2 of a DHI RPM, the RPM3 COM2 and vacuum gauge COM port must have the same communication settings. Press [SPECIAL], <5remote>, <2COM2>, <1settings> to set up PG7601-AF COM2 communications settings. When unable to establish communications between COM2 and the external vacuum gauge, consider using the PG7601-AF RS232 self test to verify COM2 operation (see Section 4.5.5.3).

© 2008 DH Instruments, a Fluke Company

원문: Fluke Calibration PG7601 메뉴얼(영문) · 제조사 원문 자료입니다. 사양은 제조사 사정에 따라 변경될 수 있습니다.

we measure, we calibrate, we validate.
㈜테솔 · www.tessol.com TS-TL-FLK-094 123 / 234
KOLAS 국제공인교정기관 · ISO/IEC 17025

TS-TL-FLK-094

4.5.6 <6gl>, SET VALUE OF LOCAL GRAVITY

PURPOSE

To view and set the value of local gravity used by PG7601-AF in reference pressure calculations (see Section 9.2.1) when *gl* is specified as the gravity value in SETTINGS (see Section 4.4).

OPERATION

To access the PG7601-AF local gravity value (gl), press **[SPECIAL]**, **<6gl>**. The display is:

```
Local gravity:
9.806650 m/s2
```

The value displayed is the PG7601-AF local gravity value. This value can be edited unless it is protected by the current security level. The default value is normal gravity of 9.806650 m/s^2.

The local gravity (gl) value may or may not be used by PG7601-AF in its calculations of defined pressure. Whether gl or another value, such as normal gravity, is used is determined by the current SETUP file (see Section 4.4), not by what is entered by pressing [SPECIAL] and selecting <6gl>.

4.5.7 <7CAL>, MANAGE INTERNAL MEASUREMENT SENSOR CALIBRATIONS

PURPOSE

To view the output of and adjust or calibrate PG7601-AF's internal sensors and measurement systems including:

Barometric pressure	Ambient relative humidity
Ambient temperature	Piston-cylinder module temperature
Vacuum	Piston position
Piston rotation rate	

In normal operation, the measurements made by PG7601-AF's internal sensors can be viewed in the SYSTEM and AMBIENT run screens by pressing [SYSTEM] or [AMBIENT] (see Sections 4.3.5 and 4.3.6).

PRINCIPLE/OPERATION

PG7601-AF internal sensor adjustment functions are considered part of PG7601-AF metrological maintenance and are covered in the maintenance section of this manual (see Section 7.2.2).

4.5.8 <8AMH>, OPERATE AUTOMATED MASS HANDLER (NOT INCLUDED)

PURPOSE

This function is only used with an AMH-38 automated mass handling system. AMH-38 automated mass handling is not included in the PG7601-SYS-AF system.

원문: Fluke Calibration PG7601 메뉴얼(영문) · 제조사 원문 자료입니다. 사양은 제조사 사정에 따라 변경될 수 있습니다.

we measure, we calibrate, we validate.
㈜테솔 · www.tessol.com TS-TL-FLK-094 124 / 234
KOLAS 국제공인교정기관 · ISO/IEC 17025

TS-TL-FLK-094

4.5.9 <9RESET>, USE SYSTEM RESETS

❍ PURPOSE

To reset various PG7601-AF settings to default or factory values.

PG7601-AF stores its user definable settings in non-volatile memory. The reset menu allows the user to selectively or completely reset these settings to factory defaults. Resets clear settings that the user may have made, and should be used only to restore the PG7601-AF to a known state. PG7601-AF will go through its reboot routine after any type of reset is executed.

❍ OPERATION

To access the reset choices press **[SPECIAL]**, **<9reset>**. The display is:

```
1sets 2units 3com
4cal 5setups 6all
```

Select the desired reset. After confirmation, the reset occurs. A reset always puts PG7601-AF through its start up routine as if power had been turned OFF and back ON.

See Sections 4.5.9.1 through 4.5.9.6 for detailed information on the specific reset choices.

⚠ *Reset functions change user settings that affect pressure measurement. If not used properly, resetting can cause out of tolerance measurements. Reset functions should only be used by qualified personnel with reference to this manual for information on the reset functions.*

4.5.9.1 <9RESET>, <1SETS>

❍ PURPOSE/OPERATION

To access Reset - Sets, press **[SPECIAL]**, **<9reset>**, **<1sets>**.

Reset - Sets clears and sets to default the user settings. This includes:

- Pressure unit of measure to pressure unit #1 of **[UNIT]** (see Section 4.3.3).
- Measurement mode to gauge (see Section 4.3.4).
- DUT head height to zero and ATM head height to -10 cm (see Sections 4.3.7, 4.5.3.3).
- DUT head height units to centimeters (see Section 4.5.3.2).
- Set up file to #1 (see Section 4.4).
- Active piston-cylinder module, mass set and mass loading bell to #1 (first in list) (see Sections 4.5.1.5, 4.5.1.10, 4.5.1.15).
- Mass loading resolution to 0.01 g (see Section 4.3.10).
- Automatic rotation OFF (see Section 4.3.8).
- Automatic rotation pre-decel on (see Section 4.3.8.1).
- Automatic pressure generation OFF (see Section 4.3.9).
- Automatic pressure generation controller RAISE function to OFF (see Section 4.3.9.1).
- Automatic pressure generation controller tolerance to 0.05% of full scale (see Section 4.3.9.4).
- Automatic pressure generation controller refloat function to ON (see Section 4.3.9.5).

© 2008 DH Instruments, a Fluke Company

원문: Fluke Calibration PG7601 메뉴얼(영문) · 제조사 원문 자료입니다. 사양은 제조사 사정에 따라 변경될 수 있습니다.

TS-TL-FLK-094

we measure, we calibrate, we validate.
KOLAS 국제공인교정기관 · ISO/IEC 17025
㈜테솔 · www.tessol.com TS-TL-FLK-094 125 / 234

- Mode to *pressure to mass* (see Section 4.3.12).
- Screen saver to 10 minutes (see Section 4.5.3.2).
- PC sounds to ON and keyboard sounds to medium frequency (see Section 4.5.4.2).

4.5.9.2 <9RESET>, <2UNITS>

❍ PURPOSE/OPERATION

To access Reset - Units, press **[SPECIAL]**, **<9reset>**, **<2units>**.

Reset - Units clears and sets to default all unit of measure functions. This includes:

- **[UNIT]** pressure unit of measure selections to defaults and active unit to #1 (see Section 4.3.3).
- Sets the user pressure unit coefficient to 1.00/Pa (see Section 4.5.2).

4.5.9.3 <9RESET>, <3COM>

❍ OPERATION/PURPOSE

To access Reset - Com, press **[SPECIAL]**, **<9reset>**, **<3com>**.

Reset - Com clears and sets to default the PG7601-AF communications ports (see Section 4.5.5). This includes:

COM1, COM2 and COM3	
Baud Rate	2 400
Parity	Even
Data Bits	7
Stop Bits	1
Terminating Characters	<CR>, <LF>
IEEE-488 (GPIB)	
Address	10
Terminating Characters	<CR>, <LF>
COM2 User Barometer Inquiry String and Characters	Learned (see Section 4.5.5.4)

4.5.9.4 <9RESET>, <4CAL>

❍ OPERATION/PURPOSE

⚠ *Use special caution with this reset as critical calibration data may be altered.*

To access Reset - Cal, press **[SPECIAL]**, **<9reset>**, **<4cal>**.

Reset - Cal DOES NOT reset piston-cylinder module, mass set and mass digital IDs. There is no user available reset for them.

원문: Fluke Calibration PG7601 메뉴얼(영문) · 제조사 원문 자료입니다. 사양은 제조사 사정에 따라 변경될 수 있습니다.

Reset - Cal clears and sets to default the user calibration coefficients for PG7601-AF on-board sensors (see Section 7.2.2, 7.3.2.2, 7.3.5). This includes:

Barometric Sensor		
	Adder	0
	Multiplier	1
	Calibration Date	19980101
Humidity Sensor		
	Adder	0
	Multiplier	1
	Calibration Date	19980101
Ambient Temperature Sensor		
	Adder	0
	Multiplier	1
	Calibration Date	19980101
Piston-Cylinder Module Temperature Sensor		
	RZ	100.000 Ω
	Slope	0.3896
	Calibration Date	19980101
Vacuum Gauge		
	Adder	0
	Multiplier	1
	Calibration Date	19980101

Reset - Cal has NO effect on the reference resistance values used to calibrate PG7601-AF's internal ohmic measurement system

4.5.9.5 <9RESET>, <5SETUPS>

To access Reset - Setups, press **[SPECIAL]**, **<9reset>**, **<5setups>**.

Reset - Setups deletes all user created SETUP files and sets selects SETUP file #1 as the active SETUP file (see Section 4.4).

4.5.9.6 <9RESET>, <6ALL>

❍ **OPERATION/PURPOSE**

To return PG7601-AF to the original, as delivered, factory condition.

To access Reset - All, press **[SPECIAL]**, **<9reset>**, **<6all>**.

- Performs the functions of the Sets, Units, Cal and Com resets (see Sections 4.5.9.1 to 4.5.9.5).
- User security level to low, but does not affect the User Level password (see Section 4.5.4.5).
- Local gravity to 9.80665 m/s^2 (see Section 4.5.6)

© 2008 DH Instruments, a Fluke Company

원문: Fluke Calibration PG7601 메뉴얼(영문) · 제조사 원문 자료입니다. 사양은 제조사 사정에 따라 변경될 수 있습니다.

TS-TL-FLK-094

we measure, we calibrate, we validate.
KOLAS 국제공인교정기관 · ISO/IEC 17025
㈜테솔 · www.tessol.com TS-TL-FLK-094 127 / 234

NOTES

원문: Fluke Calibration PG7601 메뉴얼(영문) · 제조사 원문 자료입니다. 사양은 제조사 사정에 따라 변경될 수 있습니다.

5. REMOTE OPERATION

5.1 OVERVIEW

Most of the PG7601-AF Terminal's front panel functions can also be executed by commands from a remote computer. The host computer can communicate with PG7601-AF using the COM1 RS232 port or the IEEE-488 port located on the PG7601-AF platform rear panel. The command syntax is the same for either port except when using the IEEE STD. 488.2 Common commands.

The PPC3-7M-AF pressure controller has remote communication capability via its RS232 and IEEE-488 interfaces. In normal operation, the pressure controller is only addressed by the PG7601-AF, not directly by a computer. For information on using PPC3-7M-AF independently without a computer, see the PPC3 Operation and Maintenance Manual.

5.2 INTERFACING

Sending a command to PG7601-AF places it in remote mode. The function keys on the front panel are locked-out, except for **[SYSTEM]** and **[AMBIENT]** which still respond to allow the user to change the data displayed. Pressing **[ESCAPE]** returns PG7601-AF to local operation unless the "REMOTE" command was sent which locks out keypad operation until the "LOCAL" command is sent.

Most remote commands return a reply within 500 ms. The following commands may query external devices connected to PG7601-AF's COM2 and/or COM3 ports and can take up to 5 seconds to reply:

"MASS=" (possible communications with an external AMH mass handler)
"PGEN=" (requires communications with an external pressure controller)
"SETUP=" (possible communications with external barometer or vacuum gage)

You **must** wait for this reply before issuing another command to PG7601-AF. This ensures that PG7601-AF has completed the command. An exception is the use of any of the IEEE STD. 488.2 Common Commands (see Section 5.3.4.1) via the IEEE-488 interface (common commands all start with an asterisk, "*"). The common commands only generate a reply if using the COM1 port or if the query form of the common command is used (command followed by a "?").

5.2.1 RS232 INTERFACE

To establish RS232 communications a standard pin-to-pin DB-9F to DB-9M RS232 cable must be used to connect the host COM port to PG7601-AF COM1. The interface settings of both ports must be the same.

PG7601-AF supports an independent RS232 self-test to verify that the PG7601-AF RS232 ports are operating correctly and the interface cable being used is valid. Use this self-test to troubleshoot if you are having difficulty establishing communications with any PG7601-AF COM1 (see Section 4.5.5.3).

© 2008 DH Instruments, a Fluke Company

원문: Fluke Calibration PG7601 메뉴얼(영문) · 제조사 원문 자료입니다. 사양은 제조사 사정에 따라 변경될 수 있습니다.

we measure, we calibrate, we validate.
㈜테솔 · www.tessol.com TS-TL-FLK-094 129 / 234
KOLAS 국제공인교정기관 · ISO/IEC 17025

TESSOL Technical Library
TS-TL-FLK-094

5.2.1.1 COM1

The PG7601-AF COM1 RS232 interface is located on the PG7601-AF platform rear panel. It is a 9-pin female DB-9F connector configured as a DCE device. Data is transmitted out of PG7601-AF using pin 2, and is received on pin 3. This allows a standard pin-to-pin DB-9M to DB-9F RS232 cable to be used to connect to a DTE host. Handshaking is NOT required or supported.

COM1 RS232 commands must be terminated with at least a single carriage return character, while line feed characters are ignored. All RS232 responses from PG7601-AF are terminated with a carriage return character and a line feed character (either **<CR><LF>** or **<LF><CR>** see Section 4.5.5.1).

Table 18. COM1 DB-9F pin designation

IBM PC/XT DB-9F CONNECTIONS		IBM PC/XT DB-9M to PG7601-AF DB9F CONNECTIONS	
DB-25M	DB-9F	DB-9M	DB-9F
2	3	3	3
3	2	2	2
7	5	5	5

5.2.1.2 COM2 AND COM3

The PG7601-AF COM2 and COM3 RS232 interfaces are located on the PG7601-AF platform rear panel. They are 9-pin male DB-9M connectors configured as a DTE device. Data is transmitted out of PG7601-AF using pin 3 and is received on pin 2. This allows a standard pin-to-pin DB-9F to DB-9M RS232 cable to be used to connect to a DCE slave. Handshaking is NOT required or supported.

COM2 and COM3 are used by the PG7601-AF platform to communicate with external devices. An external barometer and/or vacuum gauge (not included in PG7601-SYS-AF system) can be connected to COM2 (see Sections 4.5.5.4, 4.5.5.5). An automated pressure control component and/or AMH automated mass handler can be connected to COM3.

Table 19. COM2 and COM3 DB-9M pin designation

PIN #	FUNCTION	DESCRIPTION
2	RxD	This pin accepts serial data from another PG7601-AF or another device.
3	TxD	This pin transmits serial data from the PG7601-AF to another PG7601-AF or another device.
4	DTR	Data Terminal Ready. Held at 5 Volts.
5	Grn	This pin is the common return for the TxD and RxD signals.

IBM PC/XT DB-25F to DB-9M CONNECTIONS		IBM PC/XT DB-9F to PG7601-AF DB9M CONNECTIONS	
DB-25F	DB-9M	DB-9F	DB-9M
2	3	3	3
3	2	2	2
7	5	5	5

원문: Fluke Calibration PG7601 메뉴얼(영문) · 제조사 원문 자료입니다. 사양은 제조사 사정에 따라 변경될 수 있습니다.

TS-TL-FLK-094

we measure, we calibrate, we validate.
㈜테솔 · www.tessol.com TS-TL-FLK-094 130 / 234
KOLAS 국제공인교정기관 · ISO/IEC 17025

5.2.2 IEEE-488 (GPIB)

The PG7601-AF IEEE-488 interface is located on the PG7601-AF platform rear panel. The physical and electrical interface conforms to IEEE Std 488.1-1987 Subset E2 and IEEE Std. 488.2-1992. You should NOT attempt to communicate with the IEEE-488 interface while using the COM1 interface. The IEEE-488 receive buffer is 250 bytes deep. PG7601-AF will hold OFF release of the NRFD handshake line until it can service and empty the receive buffer. This keeps the buffer from overflowing.

IEEE-488 commands must be terminated with a single line feed character along with the assertion of the EOI line. All IEEE-488 responses from PG7601-AF are terminated with a line feed character along with the assertion of the EOI line. Replies are held in a buffer until the host computer gets them, so it is possible to have old replies in this buffer, while you are expecting new replies from a just issued command.

Address	10
Terminating Characters	**<CR>** and **<LF>** with EOI asserted with **<LF>**
IEEE Local Functions Supported	SH1, AH1, T4, L2, RL2, DC2 Parallel poll mode is not supported
Physical Interface	IEEE-488.2 with tri-state bus drivers
IEEE-488	To establish IEEE-488 communications the host computer must have an IEEE-488 card and PG7601-AF must be correctly addressed. PG7601-AF's IEEE-488 address can be set locally from the front panel using **[SPECIAL]**, **<5Remote>** (see Section 4.5.5.2). An IEEE-488 interface cable must be used.

5.3 COMMANDS

5.3.1 COMMAND SYNTAX

All PG7601-AF commands are ASCII strings. The user **must** wait for PG7601-AF to reply before sending another command. An exception to this is the use of any of the IEEE Std. 488.2 Common Commands via the IEEE-488 interface (these Common Commands are shown first in 5.3.4.1 and always start with an asterisk: "*"). The common commands only generate a reply if using the COM1 port or if the query form of the common command is used (command followed by a "?").

5.3.2 COMMAND SUMMARY

PG7601-SYS-AF is a specific configuration of the standard PG7000 piston gauge system. PG7000s support a features and options that are not included in the PG7601-SYS-AF system. In this manual, features available for PG7000 but not included in the standard PG7601-SYS-AF system have been identified or eliminated. The remote commands corresponding to these features have not been eliminated and are included in the command list in Table 20 and command descriptions in Section 5.3.4. In particular, there are numerous references to the AMH automated mass handling system, differential measurement mode and use of a RPM as an barometric measurement device that are available with PG7000 but not included in the PG7601-SYS-AF system.

© 2008 DH Instruments, a Fluke Company

원문: Fluke Calibration PG7601 메뉴얼(영문) · 제조사 원문 자료입니다. 사양은 제조사 사정에 따라 변경될 수 있습니다.

TS-TL-FLK-094

we measure, we calibrate, we validate.
㈜테솔 · www.tessol.com TS-TL-FLK-094 131 / 234
KOLAS 국제공인교정기관 · ISO/IEC 17025

Table 20. Command summary

COMMAND	DESCRIPTION
ABORT	Interrupt PG7601-AF activity and put it in an idle state
AMPHx(=)	Set or read the source for ambient humidity
AMBPx(=)	Set or read the source for ambient pressure
AMBTx(=)	Set or read the source for ambient temperature
AMB	Read back the current ambient conditions
AMHERR	Read error messages from AMH automated mass handler
AROT(=)	Set or read the current automated motorized rotation status
ATMHEIGHT(=)	Set or read the ATM head height
BELL(=)	Read or select the mass loading bell to use
BELLx(=)	Read or set a mass loading bell's information
CALx(=)	Set or read the calibration coefficients for an internal sensor
*CLS	Clear the status registers and all queues
COMx(=)	Set or read the COMx port configuration
DATE(=)	Set or read the current date
DIFLOAD	Execute the mass load determined by the DIFSETUP command
DIFOFFSET(=)	Read or set the differential mode RPM offset value
DIFSETUP	Prepare PG7601-AF to determine the differential mode RPM offset
DUTHEIGHT(=)	Set or read the DUT head height
*ESE(?)	Read or set the Event Status Enable Register
ERR	Read the last error message
*ESR?	Read the Event Status Register
HLDFALL	Read the results of the last natural fall rate measurement step completed in high line differential mode
HLDLINEP	Set a new line pressure in high line differential mode
HLDVIEW	Read the results of the last line pressure set in high line differential mode
HLDXFLT	Read the results of the last crossfloat fall rate measurement step completed in high line differential mode
*IDN?	Identify the product and software version
LOCALG(=)	Set or read the local gravity
LOCAL	Local operation
MASSSET(x)(=)	Set or read the mass set values
MASSx(=)	Set or read the mass set data
MASS(=)	Set or read the selected mass set
MEDIA(=)	Set or read the DUT head medium
MEM	Read the memory OK flag
MMODE(=)	Set or read the measurement mode
MRES(=)	Set or read the mass loading resolution
MROT(=)	Set or read the manual motorized rotation status
MR	Read the current mass load
MS=	Specify a new mass target, loading masses if AMH enabled
OHMS	Read the ambient PRT and piston-cylinder PRT resistance
*OPC(?)	Read or set the Operation Complete register (not applicable to the PG7601-AF)
*OPT?	Read the PG7601-AF options installed
PCTx(=)	Set or read the source for the piston-cylinder temp

© 2008 DH Instruments, a Fluke Company

원문: Fluke Calibration PG7601 메뉴얼(영문) · 제조사 원문 자료입니다. 사양은 제조사 사정에 따라 변경될 수 있습니다.

COMMAND	DESCRIPTION
PGEN(=)	Set or read the automated pressure generation setting
PISTONRDYx(=)	Set or read piston rotation rate limits
PISTONVARx(=)	Set or read additional piston variables
PISTONx(=)	Set or read the piston header information
PISTON(=)	Set or read the piston in use
PPC=	Send a command to an external pressure generation/control component (PPC3-7M-AF).
PPOS	Read the current piston position
PRTPC	Set or read the piston cylinder temperature PRT information
PR	Read the current PG7601-AF defined pressure and “ready” status
PS=	Specify a new PG7601-AF target pressure, loading masses if AMH enabled
READYx(=)	Set or read the ready criteria for a specific “Setup”
READYCK(=)	Set or read the ready check flag status
REMOTE	Set the PG7601-AF into local lockout condition
RESET	Set basic PG7601-AF operating conditions to default. Equivalent to front panel “Reset, Sets”.
RESUME	Resume the suspended process of setting a new pressure by remote command.
RESUME(=mode)	Set the resume mode, which determines whether a pressure setting process initiated by remote command will pause after target entry and require the RESUME comand to continue .
RPM(x)	Send a command to an external **DHI** RPM connected to COM2
*RST	Reset user settings to factory defaults
SETUP(=)	Set or read the setup to use
SN	Read the PG7601-AF serial number
SPEED	Read the piston rotation speed
*SRE(?)	Read or set the Service Request Register
*STB?	Read the Status Byte
TIME(=)	Set or read the current time
*TST?	Read the system self test results
UCOEF	Read the current pressure units conversion coefficient
UDD(=)	Set or read the user defined external barometer settings
UDU(=)	Set or read the user defined pressure unit
UDV(=)	Set or read the user defined external vacuum gage settings
UL(=)	Set or read the upper limit of an external pressure generation/control component.
UNIT(=)	Set or read the current pressure unit
VACPx(=)	Set or read the source for the vacuum measurement
VAC(=)	Set or read the vacuum reference flag
VENT(=)	To vent the test pressure to atmosphere if an automated pressure generation/control component is being used for automatic pressure generation.
VER	Read version number of the internal software
#	Send a command through PG7601-AF to an external RPM on COM2

 © 2008 DH Instruments, a Fluke Company

원문: Fluke Calibration PG7601 메뉴얼(영문) · 제조사 원문 자료입니다. 사양은 제조사 사정에 따라 변경될 수 있습니다.

5.3.3 ERROR MESSAGES

The PG7601-AF always replies to a command. If the command is incorrect or contains invalid data, an error number is returned in the form "ERR# *n*" where *n* is an integer number that represents a specific error. This allows for easy error trapping by the host computer. Table 21 is a list of the possible error numbers and the error description for each.

Table 21. Error messages

REPLY	DESCRIPTION
ERR #0	OK
ERR #1	First argument missing or out of range
ERR #2	Second argument missing or out of range
ERR #3	Third argument missing or out of range
ERR #4	Fourth argument missing or out of range
ERR #5	Fifth argument missing or out of range
ERR #6	Sixth argument missing or out of range
ERR #7	Seventh argument missing or out of range
ERR #8	Eighth argument missing or out of range
ERR #9	Unknown command
ERR #10	Motorized rotation recovering from overload
ERR #11	Command missing argument
ERR #12	System overpressured
ERR #13	External RPM or PG7601-AF not detected
ERR #14	User unit not defined
ERR #15	Range jumper setting invalid
ERR #16	Element not defined
ERR #17	UDD not defined
ERR #18	Command not yet available
ERR #19	Not available with gauge units
ERR #20	Not available with vacuum reference
ERR #21	Internal pointer error
ERR #22	Pressure must be below 20 psia
ERR #23	Option not available or installed
ERR #24	Not available with isolation on
ERR #25	Must be READY set
ERR #26	COM port failed to initialize
ERR #27	Internal device time out error
ERR #28	External device time out error
ERR #29	File not opened
ERR #30	File end
ERR #35	PG7601-AF must first be setup for differential mode
ERR #36	Mass load invalid
ERR #37	External device invalid
ERR #38	External device configured incorrectly
ERR #39	External device reply invalid
ERR #40	Not ready
ERR #41	Measurement outside limits

원문: Fluke Calibration PG7601 메뉴얼(영문) · 제조사 원문 자료입니다. 사양은 제조사 사정에 따라 변경될 수 있습니다.

TS-TL-FLK-094

we measure, we calibrate, we validate.
KOLAS 국제공인교정기관 · ISO/IEC 17025

5.3.4 COMMAND DESCRIPTIONS

Each command description gives the full syntax showing usage. Ranges of parameters or parameter types are indicated. There are two types of commands. The Common and Status Commands support IEEE STD 488.2, while the PG7601-AF commands access all other functions.

5.3.4.1 IEEE STD. 488.2 COMMON AND STATUS COMMANDS

PG7601-AF supports a set of commands that are common to all instruments conforming to IEEE Std. 488.2 protocol. Though defined by the IEEE-488.2 standard, they also apply to PG7601-AF RS232 (COM1) communications. These commands make it easy to perform basic functions for any device that supports them. These command also cover the status reporting commands. Refer to Section 5.4 for details on the status registers mentioned in these commands. Query forms of these commands must be followed by a question mark and IEEE-488.2 Common Commands always start with an asterisk ("*"). Unlike the other PG7601-AF commands, they must have a space instead of an equals sign ("=") between the command and any arguments. Also unlike the other PG7601-AF commands, if you are using the IEEE-488 port, the query form (command is immediately followed by a "?") must be used to get a reply. If using the COM1 port and the command is not a query, "OK" will be replied.

∗CLS	
Purpose	Clear all of the status and event structures.
Syntax	"∗CLS"
Remarks	This program message clears the following evens and status registers: Standard Byte Register (STB) Standard Event Status Register (ESR) Error Queue AMH error message Pending OPC operations
Example	Command: "*CLS" Reply: "OK" (using COM1. No reply if IEEE-488 port)

∗ESE(?)	
Purpose	Read or set the Standard Event Status Enable Register.
Syntax	"∗ESE *n*" "∗ESE?"
Parameters	n: '0 to 255' This is the decimal representation of the bit(s) to enable. To enable the PON and QYE bits, the argument would be 128 + 4 = 132.
Query Reply	*n* (0 to 255)
Remarks	The Standard Event Status Enable register determines which bits in the standard Event Status Register are enabled and included in the Status Byte Register (ESB bit), and can assert the SRQ line. The reply is in decimal numeric form.
Example	Command: "*ESE 132" Reply: "OK" (using COM1. No reply if IEEE-488 port) Command: "*ESE?" Reply: "132"

∗ESR?	
Purpose	Read the Standard Event Register.
Syntax	"∗ESR?"
Query Reply	*n* (0 to 255)
Remarks	The Standard Event Register contents are cleared after reading. The reply is in decimal numeric form.
Example	Command: "*ESR?" Reply: "4"

∗IDN?	
Purpose	Identify the PG7601-AF model, and serial number.
Syntax	"∗IDN?"
Remarks	The identification reply is made up of the manufacturer, the model, the serial number and the software version. Each is separated by a comma.
Query Reply	The version string.
Example	Command: "*IDN?" Reply: "DH INSTRUMENTS INC, PG7102, 1001, Ver2.00 –fhf"

© 2008 DH Instruments, a Fluke Company

원문: Fluke Calibration PG7601 메뉴얼(영문) · 제조사 원문 자료입니다. 사양은 제조사 사정에 따라 변경될 수 있습니다.

TS-TL-FLK-094

we measure, we calibrate, we validate.
㈜테솔 · www.tessol.com TS-TL-FLK-094 135 / 234
KOLAS 국제공인교정기관 · ISO/IEC 17025

∗OPC(?)	
Purpose	Sets the operation complete bit when all operations have completed.
Syntax	"∗OPC" "∗OPC?"
Remarks	This Command enables PG7601-AF to set the OPC bit in the Standard Event Status Register when it has completed all pending functions. The Query replies with a "1" when all functions are complete. Since PG7601-AF does not support overlapping commands, this command has no practical use.
Query Reply	"0" or "1"
Example	Command: "*OPC" Reply: "OK" (using COM1. No reply if IEEE-488 port) Command: "*OPC?" Reply: "1"

∗OPT?	
Purpose	Reads the list of installed molbloc RFM options.
Syntax	"∗OPT?"
Remarks	This Query returns any registered option(s) installed in the PG. Each option is separated by a comma.
Query Reply	A comma delimited text field of the installed options.
Example	Command: "*OPT?" Reply: "NONE" (no options installed) Reply: "auto rotation" (auto rotation option)

∗RST	
Purpose	Resets the PG7601-AF settings to factory settings.
Syntax	"∗RST"
Remarks	This Command sets the PG7601-AF settings to factory settings which is equivalent to a front panel executed **[SPECIAL], <5Reset>, 1sets**. This does not affect the communications settings.
Example	Command: "*RST" Reply: "OK" (using COM1. No reply if IEEE-488 port)
See Also:	4.5.9.1

∗SRE(?)	
Purpose	Read or set the Service Request Enable Register.
Syntax	"∗SRE *n*" "∗SRE?"
Parameters	n: '0 to 255' This is the decimal representation of the bit(s) to enable. To allow the MAV and ESB bits to assert the SRQ line, the argument would be 32 + 16 = 48. Bit 6 (64) is reserved and cannot be set.
Remarks	The Service Request Enable Register determines which bits of the Status Byte can set the MSS bit of the Status Byte and request service by asserting the SRQ line of the IEEE-488 interface.
Query Reply	*n* (0 to 255)
Example	Command: "*SRE 48" Reply: "OK" using COM1. No reply if IEEE-488 port) Command: "*SRE?" Reply: "48"

∗STB?	
Purpose	Read the Status Byte Register.
Syntax	"∗STB?"
Remarks	The Status Byte Register reflects the general status of the PG. The 'MSS' bit state is represented by bit 6.
Query Reply	*n* (0 to 255)
Example	Command: "*STB?" Reply: "4"

원문: Fluke Calibration PG7601 메뉴얼(영문) · 제조사 원문 자료입니다. 사양은 제조사 사정에 따라 변경될 수 있습니다.

*TST?	
Purpose	Read the power on self test status.
Syntax	"*TST?""
Remarks	The PG7601-AF system memory stores the user settings (units, mode, resolution) and retains them when the unit is shut off. On power up, this memory is checked. If this memory is corrupted, all user settings are reset to default (as if the "*RST" program message was executed), and the *TST query returns a '1'. If PG7601-AF passed the test on power up OR if the *TST query was used at least once since the unit was powered up the reply is '0'.
Query Reply	"0" or "1"
Example	Command: "*TST?" Reply: "1"

5.3.4.2 PG7601-AF COMMANDS

PG7601-SYS-AF is a specific configuration of the standard PG7000 piston gauge system. PG7000s support a features and options that are not included in the PG7601-SYS-AF system. In this manual, features available for PG7000 but not included in the standard PG7601-SYS-AF system have been identified or eliminated. The remote commands corresponding to these features have not been eliminated and are included in the command list in Table 20 and command descriptions in Section 5.3.4. In particular, there are numerous references to the AMH automated mass handling system, differential measurement mode and use of a RPM as an barometric measurement device that are available with PG7000 but not included in the PG7601-SYS-AF system.

#	
Purpose	To send a command through PG7601-AF to an external device on COM2.
Syntax	"#ddddd"
Default	N/A
Argument	N/A
Remarks	If PG7601-AF receives a command from the serial port (COM1) with a "#" as the leading character, the character is stripped off and the command is sent out the secondary serial port (COM2). Any data received from the secondary serial port (COM2) is sent back out the main serial port (COM1) automatically.
Example	Typical command: "#*0100P3" Typical reply: "*000114.503"
Error	4.5.5

ABORT	
Purpose	Aborts any active process executing in the PG7601-AF.
Syntax	"ABORT"
Default	N/A
Argument	N/A
Remarks	The ABORT command places the PG7601-AF in an Idle state, halting the execution of any active processes. This includes automated AMH mass loads, auto float operations or any differential or high line differential mode preparation sequence.
Example	Typical command: "ABORT" Typical reply: "ABORT"
Error	None
See Also	PS=, MS=, AROT, DIFOFFSET, DIFSETUP, HLDLINEP

© 2008 DH Instruments, a Fluke Company

원문: Fluke Calibration PG7601 메뉴얼(영문) · 제조사 원문 자료입니다. 사양은 제조사 사정에 따라 변경될 수 있습니다.

we measure, we calibrate, we validate.
㈜테솔 · www.tessol.com TS-TL-FLK-094 137 / 234
KOLAS 국제공인교정기관 · ISO/IEC 17025

TS-TL-FLK-094

AMBHx(=)	
Purpose	Set or read the source for the ambient humidity measurement. Also optionally sets the USER defined measurement.
Syntax	"AMBHx=source, meas" "AMBHx=source" "AMBHx"
Default	INTERNAL
Argument	x: The setup number from 1 to 19. See the SETUP command. Setup 21 is reserved for remote communication use only. Source: The measurement source. This can be INTERNAL, DEFAULT (normal) or USER. Meas: The current measurement used. This can only be set if the source argument is USER. If specified, the limit for this argument is 0 to 100 %.
Remarks	PG7601-AF has an on-board humidity sensor that can be used as the source of ambient humidity values in calculations. You may also request that another source be used for this measurement. The measurement source can be the internal sensor, a user defined fixed value, or a normal value. The SETUP function allows 19 separate source configurations for the various SETUP variables to be saved in 19 files. The SETUP command selects which of the files to make active. Setup number 1 is restricted as INTERNAL only to serve as a manufacturer's fixed Setup, and cannot be changed.
Example	Typical command: "AMBH2=USER,50" Typical reply: "USER, 50 %" Typical command: "AMBH9=INTERNAL" Typical reply: "INTERNAL, 25 %"
Error	ERR #1 The setup number x is invalid ERR #2 The source argument is invalid ERR #3 The meas argument is invalid
See Also	1.1.2.2, 4.1.1, 4.3.6, 4.4, SETUP

AMBPx(=)	
Purpose	Set or read the source for the ambient pressure measurement. Also optionally sets the USER defined measurement.
Syntax	"AMBPx=source, meas" "AMBPx=source" "AMBPx"
Default	INTERNAL
Argument	x: The setup number from 1 to 21. See the SETUP command. Setup 21 is reserved for remote communication use only. Source: The measurement source. This can be INTERNAL, DEFAULT (normal), USER, RPM or the user defined barometer "label". Meas: The current measurement used is kPaa. This can only be set if the source argument is USER. If specified, the limit for this argument is 70 to 110 kPaa.
Remarks	PG7601-AF has an internal atmospheric pressure sensor that can be used as the source of ambient pressure values in calculations. You may also request that another source be used for this measurement. The measurement source can be the internal sensor, a user defined fixed value, the manufacturer's fixed default value, an external RPM, or a user defined external barometer. If an external RPM or a user defined external barometer is chosen, you must setup the COM2 port to the proper settings. It is also advised to set this up prior to selecting the setup to make the device active. If you specify "RPM" or the user defined barometer "label" , then all other barometer source setups set to "RPM" or the user defined barometer will change to this source, as it is a global selection. The SETUP function allows 19 separate source configurations for the various SETUP variables to be saved in 19 files. The SETUP command selects which of the files to make active. Setup number 1 is the manufacturer's preferred Setup, and cannot be changed. The meas argument is used to allow the user to define a fixed value if the source is set to USER. The reply will always include the source and the meas fields.
Example	Typical command: "AMBP2=USER,101.g0" Typical reply: "USER, 101.90 kPaa" Typical command: "AMBP9=INTERNAL" Typical reply: "INTERNAL, 98.234kPaa"
Error	ERR #1 The setup number x is invalid ERR #2 The source argument is invalid ERR #3 The meas argument is invalid
See Also	1.1.2.2, 4.1.1, 4.3.6, 4.4, SETUP, UDU, COM2

원문: Fluke Calibration PG7601 메뉴얼(영문) · 제조사 원문 자료입니다. 사양은 제조사 사정에 따라 변경될 수 있습니다.

AMBTx(=)	
Purpose	Set or read the source for the ambient temperature measurement. Also optionally sets the USER defined measurement.
Syntax	"AMBTx=source, meas" "AMBTx=source" "AMBTx"
Default	INTERNAL
Argument	x: The setup number from 1 to 21. See the SETUP command. Setup 21 is reserved for remote communication use only. Source: The measurement source. This can be INTERNAL, DEFAULT (normal), or USER. Meas: The current measurement used is degrees Celsius. This can only be set if the source argument is USER. If specified, the limit for this argument is 0 to 50 ° C.
Remarks	PG7601-AF has an internal ambient temperature sensor that can be used as the source of ambient temperature values in calculations. You may also request that another source be used for this measurement. The measurement source can be the internal sensor, a user defined fixed value or the manufacturer's fixed default value. The SETUP function allows 19 separate source configurations for the various SETUP variables to be saved in 19 files. The SETUP command selects which of the files to make active. The SETUP command selects which of the 19 to use. Setup number 1 is restricted as INTERNAL only to serve as a manufacturer's fixed Setup, and cannot be changed. The meas argument is used to allow the user to define a fixed value if the source is set to USER. The reply will always include the source and the meas fields.
Example	Typical command: "AMBT2=USER,22.00" Typical reply: "USER, 22.0 dC" Typical command: "AMBT9=INTERNAL" Typical reply: "INTERNAL, 23.2 dC"
Error	ERR #1 The setup number x is invalid ERR #2 The source argument is invalid ERR #3 The meas argument is invalid
See Also	1.1.2.2, 4.1.1, 4.3.6, 4.4, SETUP

AMB	
Purpose	To read all of the ambient conditions from the sources defined by the current setup.
Syntax	"AMB"
Default	N/A
Argument	none
Remarks	PG7601-AF calculations use five ambient conditions to calculate the current pressure. The source of these ambient conditions is defined by the current setup (see the SETUP command). These ambient values can be read at once using this command. They are returned along with the measurement units, and are separated by commas. The units and resolution of the measurement fields are fixed. The format returned is: "xxx.xxxx kPaa, xxx.x Paa, xxx %, xx.xx dC, xx.xx dC" The first field is the atmospheric pressure. The second field is the vacuum under the bell jar. The third field is the relative humidity. The fourth field is the ambient temperature. The fifth field is the piston-cylinder temperature.
Example	Typical command: "AMB" Typical reply: "98,4594 kPaa, 18.3 Paa, 24%, 23.45 dC, 22.53 dC
Error	None
See Also	1.1.2.2, 4.1.1, 4.3.6, 4.4, SETUP

AROT(=)	
Purpose	To set or read the automated motorized rotation status.
Syntax	"AROT=x" "AROT"
Default	AROT=0
Argument	x: The status to set.
Remarks	PG7601-AF can rotate and brake the piston automatically when appropriate. This function can be enabled by setting the status to '1'. Setting the status to '0' disables the auto rotate function.
Example	Typical command: "AROT=0" Typical reply: "AROT=0"
Error	ERR #1 The argument was not a '0' or a '1'
See Also	4.3.8, 4.1.3.2

 © 2008 DH Instruments, a Fluke Company

원문: Fluke Calibration PG7601 메뉴얼(영문) · 제조사 원문 자료입니다. 사양은 제조사 사정에 따라 변경될 수 있습니다.

AMHERR	
Purpose	To read the last known error message from an active external AMH automated mass handler.
Syntax	"AMHERR"
Remarks	If an optional AMH automated mass handler is being used, it can generate it's own error message during operation. This usually occurs if the AMH is not properly setup, for example the drive air pressure is inadequate, or it has a mechanical failure. If the AMH fails to operate at expected., the 3rd character of the "PR" command reply is an "E". If this occurs, you can use the "AMHERR" command to get the specific AMH error message, and refer to the AMH-38/AMH-100 Operation and Maintenance Manual for more details. You should not routinely poll the PG with the AMHERR command, as it may contain a previously saved error that was recoverable by the PG. Instead, use the "PR" command to detect an AMH error first. The AMH error message is cleared by the next successful AMH operation or by sending the "*CLS" command. If there is no error, "OK" is returned.
Example	Typical command: "AMHERR" Typical reply: "ERR#122" (consult AMH-38/AMH-100 Operation and Maintenance Manual) Typical reply: "OK" (no AMH errors or AHM not active)
See Also	AMH-38/AMH-100 Operation and Maintenance Manual, ""PR"

ATMHEIGHT(=)	
Purpose	To set or read the height of an external barometer relative to the reference level on the PG7601-AF mounting post (ATM head).
Syntax	"ATMHEIGHT=height" "ATMHEIGHT"
Default	"ATMHEIGHT= 0.00 cm
Argument	height: The position of the barometer relative to the PG7601-AF mounting post reference level. This value will be negative if the sensor is below the reference level, and positive if the sensor is above the mark.
Remarks	PG7601-AF uses this height difference to apply a head correction to the atmospheric measurement (ATM head). For the internal sensor, this value is -10 cm. This value can be set from –1 000 to 1 000 cm.
Example	Typical command: "ATMHEIGHT=-20" Typical reply: "-20.00 cm"
Error	ERR #1 The argument was <-1000 or >1000
See Also	4.3.7 PRINCIPLE, 4.5.3 PRINCIPLE 9.2.2.1

BELL(=)	
Purpose	Read or select the mass loading bell to use.
Syntax	"BELL=x" "BELL"
Default	1
Argument	x: The mass bell number 1, 2, or 3.
Remarks	You may define up to three different loading mass bells to use with PG7601-AF using the BELLx command. You can then use the "BELL=x" command to select one of the three to use.
Example	Typical command: "BELL=2" Typical reply: "2"
Error	ERR #1 Invalid or specifies a mass bell that is not defined
See Also	4.5.1 PRINCIPLE, 4.5.1.15

원문: Fluke Calibration PG7601 메뉴얼(영문) · 제조사 원문 자료입니다. 사양은 제조사 사정에 따라 변경될 수 있습니다.

BELLx(=)	
Purpose	Read or set a mass loading bell's information.
Syntax	"BELLx=Sn, Dens, Mass, Report#, CalDate, EditDate" "BELLx"
Default	N/A
Argument	x: The mass bell number 1, 2, or 3 Sn: The mass bell serial number (4 digits max) Dens: The mass bell density Mass: The bell mass (kg) Cert#: The Calibration report number (4 digits max) CalDate: The date that the mass set was last calibrated (YYYYMMDD) EditDate: The date that the mass information was last edited.(YYYYMMDD)
Remarks	You may define up to three different mass bells to use with the PG7601-AF using the BELLx command. You can then use the "BELL=x" command to select one of the three to use.
Example	Typical command: "BELL1" Typical reply: "BELL1=101,5058.0 kg/m3,0.500010 kg, 1001, 19980415, 9980415"
Error	ERR #1..7 Invalid or specifies a mass set that is not defined
See Also	4.5.1 PRINCIPLE, 4.5.1.11

CALx(=)	
Purpose	To set or read the calibration adder and multiplier for PG7601-AF platform internal measurement sensors.
Syntax	"CALx=adder, mult" "CALx"
Default	CALx=0, 1
Argument	x: "1" for the ambient temperature sensor (degrees Celsius). "2" for the ambient pressure sensor (kPaa). "3" for the vacuum sensor (Paa). "4" for the relative humidity sensor (%RH). adder: The calibration adder. mult: The calibration multiplier.
Remarks	The internal sensors can be calibrated by the user if needed. This is possible by specifying an adder or a multiplier, or both if needed. The ambient sensor measurement is adjusted using the user calibration adder and multiplier: Adjusted Ambient measurement = (measurement x multiplier) + adder This calibration information should be changed with care, as it affects the ambient value. It does not affect the default value or a user defined value.
Example	Typical command: "CAL2=0.100, 1" Typical reply: "0.10000 kPaa, 1.000000"
See Also	7.2.2, 7.3.5

 © 2008 DH Instruments, a Fluke Company

원문: Fluke Calibration PG7601 메뉴얼(영문) · 제조사 원문 자료입니다. 사양은 제조사 사정에 따라 변경될 수 있습니다.

COMx(=)	
Purpose	To set or retrieve the configuration of the COM ports.
Syntax	"COMx=baud,parity,data,stop" "COMx"
Default	"COM1=2400,E,7,1" "COM2=2400,E,7,1" "COM3=2400,E,7,1"
Argument	x: "1" for COM1 port "2" for COM2 port "3" for COM3 port The arguments must be separated by commas.
Remarks	The available parameters are listed below. Once the port is configured, the configuration is stored in permanent memory and becomes active on power up. When the configuration of the primary port (COM1) is changed, the returned reply is sent at the original COM1 settings but all subsequent replies will be sent at the new configuration settings. COM2 is used for an external barometer and/or external vacuum gage. COM3 is used for control of an external PPC pressure controller and/or an AMH automated mass handler. Serial Parameters: Baud rates: 150 300 600 1 200 2 400 4 800 9 600 Parity: O – Odd E - Even N - None Data bits: 7 8 Stop bits: 1 2
Example	Typical command: "COM1=9600,E,7,1" Typical reply: "9600,E,7,1"
Error	ERR #1 Missing or wrong COM setting
See Also	4.5.5

DATE(=)	
Purpose	To read or set the internal calendar.
Syntax	"DATE=YYYYMMDD" "DATE"
Default	N/A
Argument	The date in the YYYYMMDD format. YYYY: The year from 1980 to 2079. MM: The month 1 to 12. DD: The day of the month 1 to (up to) 31 depending on the month and year.
Remarks	The internal calendar is used to date stamp changes made to the internal sensor calibrations and the piston-cylinder module, mass set and mass loading bell digital IDs.
Example	Typical command: "DATE"19991231 Typical reply: "=20060408"
Error	ERR #1 If invalid date argument
See Also	4.5.4.3

DIFLOAD	
Purpose	Executes the mass load determined by the DIFSETUP command.
Syntax	"DIFLOAD"
Remarks	This command must be preceded by the DIFSETUP command. The DIFSETUP command sets up the PG7601-AF and determines the proper mass load for offset determination. The DIFLOAD command executes the mass load determined by the DIFSETUP command and places the PG7601-AF into the offset determination mode. When in this mode, use the DIFOFFSET command to query the PG for the calculated differential offset. The DIFOFFSET command is also used to save the offset as the new differential mode RPM offset value, and to exit the offset determination mode. The ABORT command can also be used to exit the offset determination mode. The reply is the same nominal mass values returned by the DIFSETUP command that is expected to be loaded.
Example	Typical command: ""DIFLOAD" Typical reply: "9.7 kg, 28.05 g"
Error	See the "DIFSETUP" and "DIFOFFSET" commands. ERR #1 Argument is invalid. ERR #23 Vacuum reference not supported by this PG7601-AF. ERR #35 The "DIFSETUP" was not used prior to this command.
See Also	DIFLOAD, DIFSETUP

원문: Fluke Calibration PG7601 메뉴얼(영문) · 제조사 원문 자료입니다. 사양은 제조사 사정에 따라 변경될 수 있습니다.

DIFOFFSET (=)	
Purpose	Set or read the differential offset value.
Syntax	"DIFOFFSET=offset, pressure" "DIFOFFSET"
Default	Offset: 0 Pa Pressure: 101325.0 Paa
Argument	Offset: *"NEW"* Saves the current calculation of RPM offset if PG7601-AF is currently in the offset determination mode, else set the differential offset value in Pa. Pressure: The PG7601-AF defined pressure when the previously determined differential offset was saved or if *Offset* is "NEW", this argument is ignored and should not be used.
Remarks	The DIFOFFSET commands have two types of operation. If PG7601-AF is in the offset determination mode, the calculated offset of the external measurement device from the PG7601-AF defined pressure is returned along with the current PG7601-AF pressure. If the "NEW" arguments is given with this command, the calculated offset and PG7601-AF pressure are saved as the new RPM offset and pressure, and PG7601-AF exits the offset determination mode returning to normal operation, with differential measurement mode enabled. If the PG7601-AF is not in the offset determination mode, this command just reads back the RPM offset and pressure as determined previously, or can be used set them to another value.
Example	Typical command: "DIFOFFSET=7.1,97.100" Typical reply: "7.10 Pa, 97.10 000 Paa" If PG7601-AF is in the offset determination mode: Typical command: "DIFOFFSET=NEW" Typical reply: "4.13 Pa, 96.14321 Paa"
Error	See the "DIFSETUP" and "DIFLOAD" commands. ERR #1 The Offset field is invalid or missing. ERR #2 The Pressure field is invalid or missing. ERR #35 Offset was "NEW" but the PG is not in the offset determination mode.
See Also	DIFLOAD, DIFSETUP

DIFSETUP	
Purpose	Prepare PG7601-AF to determine the differential RPM mode offset.
Syntax	"DIFSETUP"
Remarks	The differential mode of operation requires that an RPM offset be determined. This command sets up PG7601-AF to determine the RPM offset. The PG measurement mode is changed to absolute by vacuum, the mass load resolution is set to 0.01g, and the head correction isdisabled. You MUST have PG7601-AF setup to use an external pressure measurement device (RPM) connected to COM2 to execute this command. The reply to this command is the external device measurement; the true and the nominal mass load needed to generate the pressure indicated by the external device. After using this command to setup PG7601-AF for offset determination, you then should use the "DIFLOAD" command to execute the mass load determined by this command. The external device (RPM) measurement, the actual true mass value, the main mass nominal value, and trim mass values that need to be loaded are returned by this command. It is provided in the following comma delimited format: bb.bbbbb Paa, aa.aaaaaa Kg, mm.m Kg, t.ttt g bb.bbbbb Paa: The barometer measurement. aa.aaaaaa kg: The actual total true mass value. mm.m kg: The total of the main mass's nominal values. t.tttg: The trim mass loaded.
Example	Typical command: ""DIFSETUP" Typical reply: "97.23238 Paa, 9.728002 kg, 9.7 ,g, 28.05 g"
Error	See the "DIFLOAD" and "DIFOFFSET" commands ERR #1 The barometer measurement resulted in an invalid mass load ERR #23 Vacuum reference not supported by this PG7601-AF ERR #28 An external measurement device has not been SETUP
See Also	DIFLOAD, DIFOSSET(=)

 © 2008 DH Instruments, a Fluke Company

원문: Fluke Calibration PG7601 메뉴얼(영문) · 제조사 원문 자료입니다. 사양은 제조사 사정에 따라 변경될 수 있습니다.

DUTHEIGHT(=)	
Purpose	To set or read the height of an external Device Under Test (DUT) relative to the reference level on the PG7601-AF mounting post (DUT head).
Syntax	"DUTHEIGHT=height" "DUTHEIGHT"
Default	"ATMHEIGHT=0.00cm"
Argument	height: The position of the device under test relative to the PG7601-AF mounting post reference mark. This value will be negative if the DUT is below the reference level, and positive if the DUT is above the reference level.
Remarks	PG7601-AF uses this height difference to apply a head correction to the pressure calculation. This value can be set from –1 000 to 1 000 cm.
Example	Typical command: "DUTHEIGHT=20" Typical reply: "20.00cm"
Error	ERR #1 The argument was <-1000 or >1000
See Also	4.3.7, 4.5.3

ERR	
Purpose	To read the error messages of the last command.
Syntax	"ERR"
Default	ERR#=OK
Argument	N/A
Remarks	If the last response returned from PG7601-AF was an error (ERR#xx), then the error message that corresponds to that error can be read. If an error is received and a valid command is sent to PG7601-AF before the "ERR" command has been sent, the error pointer is reset and an "ERR# 0 = OK" will be returned with the next "ERR" command. The *CLS command clears any pending error messages. See Error Message Summary List Section 4.3.3.
Example	Typical command: "ERR" Typical reply: "ERR# 0 = OK"
Error	None
See Also	5.3.3, AMHERR

HLDFALL	
Purpose	Get the results of the last natural fall rate measurement step while executing the line pressure sequence in high line differential mode.
Syntax	"HLDFALL"
Remarks	This command should only be used after the natural fall rate measurement function of setting a line pressure has completed (see Section 4.5). The reply contains: Reference piston average fall rate (mm/min) Tare piston average fall rate (mm/min) Natural fall rate difference (Ref-Tare) or "ERR" If the reference or tare piston position was outside of ± 2.9 mm during this step, an ERR message will be contained in the third data field of the reply.
Example	Typical command: "HLDFALL" Typical reply: "-1.1, -1.3, 0.2" (step completed without error)
Error	ERR #40 Did not just complete crossfloat step of LineP sequence ERR #41 Piston position exceeded ± 2.9 mm
See Also	MODE, ABORT, HLDVIEW, HLDPPOS, HLDFALL, HLDXFLT

원문: Fluke Calibration PG7601 메뉴얼(영문) · 제조사 원문 자료입니다. 사양은 제조사 사정에 따라 변경될 수 있습니다.

HLDLINEP		
Purpose	Execute the functions needed to set a new line pressure in high line differential mode.	
Syntax	"HLDLINEP" "HLDLINEP=*LineP*" "HLDLINEP=NEXT" "HLDLINEP=REPEAT"	
Remarks	This command controls the new line pressure set sequence. It starts the sequence, increments through the sequence steps and completes the sequence (see Section 4.5). Use the "ABORT" command to abort the sequence at any time.	
Argument	LineP:	The new line pressure to set. This is the initial step to setting a new line pressure for high line differential mode. PG7102 will check the request to ensure that the mass set and piston combination can cover the pressure requested. PG7102 will also configure itself and the tare PG7601-AF to set a new line pressure. A tare PG7601-AF must be connected to the reference PG7102's COM2 port and communications setting of the tare PG7601-AF's COM1 port must match the reference PG7102's COM2 port. After this command is successfully executed, you can use the "MR" command to get the mass value needed to set the line pressure.
	NEXT:	Executes the next step when setting the line pressure. Refer to Section 4.5 for examples of the use of this argument. This argument is only valid if a new line pressure has previously been requested by using the "*LineP*" argument, but the line pressure sequence has not been completed yet.
	REPEAT:	Repeats the previous step when setting a new line pressure. This argument is only valid at specific points in the line pressure set sequence. Refer to Section 4.5 for examples of the use of this argument.
Example	Typical command:	""HLDLINEP=2000" (Start new line pressure set sequence)
	Typical reply:	"2000.00 kPa"
	Typical command:	""HLDLINEP=NEXT" (Start the next step)
	Typical reply:	BUSY1" or "BUSY2" (The next step has started)
	Typical command:	""HLDLINEP=REPEAT" (Repeat the last step)
	Typical reply:	"OK"
	Typical command:	""HLDLINEP"
	Typical reply:	"BUSY1" (Natural fall rate function is running)
	Typical reply:	"BUSY2" (Crossfloat function is running)
	Typical reply:	"OK" (Function is complete)
Error	ERR #1	Line pressure is invalid for active piston and mass set
	ERR #1	Text argument not as expected
	ERR #13	Tare PG7601-AF has not been detected
	ERR #28	Tare PG7601-AF communications timeout
	ERR #37	Tare PG7601-AF incorrect type or software version
	ERR #38	Tare and reference pistons do not match
	ERR #39	Tare PG7601-AF's reply not as expected
	ERR #40	"NEXT" argument given but current step not complete or failed
See Also	MODE, ABORT, MR, HLDVIEW, HLDPPOS, HLDFALL, HLDXFLT	

HLDPPOS		
Purpose	Get the piston positions of the reference and tare PG7601-AFs in high line differential mode. Also returns the real time or average crossfloat fall rate difference when available.	
Syntax	"HLDPPOS"	
Remarks	This command can be used while generating the line pressure or during normal high line pressure operation. The third field (crossfloat fall rate difference) is only available during the crossfloating step of line pressure setting. It is an average value during the crossfloat fall rate measurement function and a real time value in all other conditions.	
Example	Typical command:	"HLDPPOS"
	Typical reply:	"0.7, 0.6, 9 8"
Notes	See the "HLDLINEP" command	
See Also	MODE, ABORT, HLDVIEW, HLDPPOS, HLDFALL, HLDXFLT	

 © 2008 DH Instruments, a Fluke Company

원문: Fluke Calibration PG7601 메뉴얼(영문) · 제조사 원문 자료입니다. 사양은 제조사 사정에 따라 변경될 수 있습니다.

HLDVIEW	
Purpose	Get the results from the previous line pressure set in high line differential mode.
Syntax	"HLDVIEW"
Remarks	Returns the results of the previous line pressure set sequence (local or remote). This data is replied in the following comma delimited format: pppp.pp uuuu, rr.r, tt.t, RR.R, TT.T, delta Pppp.pp The nominal line pressure uuuu The line pressure units rr.r The reference piston-cylinder temperature recorded at the time of crossfloat in º C tt.t The tare piston-cylinder temperature recorded at the time of crossfloat º C RR.R The reference piston natural fall rate (mm/s) TT.T The tare piston natural fall rate (mm/s) Delta The natural fall rate difference
Example	Typical command: ""HLDVIEW" Typical reply: "2000.0 kPa, 23.4, 23.2, -0.3, -0.4, 0.21"
See Also	MODE, ABORT, HLDVIEW, HLDPPOS, HLDFALL, HLDXFLT

HLDXFLT	
Purpose	Get the results of the last crossfloat fall rate measurement step while executing the line pressure sequence in high line differential mode.
Syntax	"HLDXFLT"
Remarks	This command should only be used after the crossfloat fall rate measurement function of setting a line pressure has completed (see Section 4.5). The reply contains: Final average crossfloat fall rate difference (Δmm/min) or "ERR" Suggested trim mass (g) adjustment on the tare PG7601-AF or "ERR" If the reference or tare piston position was outside of ± 2.9 mm during this step, an ERR message is contained in both data fields.
Example	Typical command: "HLDXFLT" Typical reply: "0.1, 0.001g" (step completed without error) Typical reply: "ERR, ERR" (piston position exceeded ± 2.9 mm)
Error	ERR #40 Did not just complete crossfloat step of LineP sequence ERR #41 Piston position exceeded ± 2.9 mm
See Also	MODE, ABORT, HLDVIEW, HLDPPOS, HLDFALL, HLDXFLT

LOCALG(=)	
Purpose	Set or read the PG7601-AF local gravity.
Syntax	"LOCALG=x" "LOCALG"
Default	"LOCALG=9.80665"
Argument	X: The current local gravity.
Remarks	The local gravity is used in the mass to pressure calculation. The Setup determines if the local gravity, the default gravity or a user defined gravity will be used for this calculation.
Example	Typical command: "LOCALG=9.805" Typical reply: "9.80500"
Error	ERR #1 If x is <8 or >11
See Also	4.5.6, 4.1.1, 4.4

LOCAL	
Purpose	Place the device in the LOCAL mode.
Syntax	"LOCAL"
Default	N/A
Argument	N/A
Remarks	In LOCAL mode all front panel operations are available. The LOCAL command deactivates REMOTE mode.
Example	Typical command: ""LOCAL" Typical reply: "LOCAL"
Error	None

원문: Fluke Calibration PG7601 메뉴얼(영문) · 제조사 원문 자료입니다. 사양은 제조사 사정에 따라 변경될 수 있습니다.

MASS(=)		
Purpose	Read or set the current mass set.	
Syntax	"MASS=n" "MASS"	
Default	N/A	
Argument	N:	The mass set number 1, 2, or 3.
Remarks	You may define up to three different mass sets to use with PG7601-AF using the MASSx and MASSSETx commands. The MASS(=) command is then used to select the current active mass set. A mass set must be defined before selecting it. If an AMH mass set is specified, the AMH automated mass handler is initialized.	
Example	Typical command: Typical reply:	""MASS" "MASS=1"
Error	ERR #1 ERR #13	n invalid or specifies a mass set that is not defined AMH mass set was specified but an AMH automated mass handler was not detected.
See Also	4.5.1.10, 4.5.1 PRINCIPLE	

MASSx(=)		
Purpose	Read or set a mass set's general information.	
Syntax	"Massx=Sn,Dens,extra1,extra2,extra3,Cert#,CalDate,EditDate, AMH" "Massx"	
Default	N/A	
Argument	x: Sn: Dens: extra1/2/3: Cert#: CalDate: EditDate: AMH:	The mass set number 1, 2, or 3. The mass set serial number (4 digits max). The main mass density. These are placeholders for data fields that are obsolete and are always '0'. The calibration report number (4 digits max). The date that the mass set was last calibrated (YYYYMMDD). The date that the mass information was last edited (YYYYMMDD). '0' for a manual mass set '1' for an AMH mass set.
Remarks	You may define up to three different mass sets to use with PG7601-AF using the MASSx and MASSSETx command. The MASSSETx command must be used first. The MASSx command is then used to edit the mass set general information. If the "AMH" flag is set, the mass set defined must correspond exactly to the AMH's mass set.	
Example	Typical command: Typical reply:	"MASS1" "MASS1=101,8000.0 kg/m3,0,0,0,1002,19980415,19980415, 0"
Error	ERR #1..9	Invalid arguments
See Also	4.5.1.6, 4.5.1 PRINCIPLE, 4.1.5, MASSSETx	

 © 2008 DH Instruments, a Fluke Company

원문: Fluke Calibration PG7601 메뉴얼(영문) · 제조사 원문 자료입니다. 사양은 제조사 사정에 따라 변경될 수 있습니다.

MASSSETx(=)	
Purpose	Read and define the masses included in the mass sets.
Syntax	"MASSSETX" "MASSSET=nominal,true" "MASSSET"
Default	N/A
Argument	x: The mass set number 1, 2, or 3. 0 To "close" a mass set. nominal: The nominal mass value. true: The true mass value.
Remarks	You may define up to three different mass sets to use with the PG7601-AF. The mass set true mass values must be defined before use. The specified mass set can only be accessed serially, and you cannot edit or view just one mass in the set. This allows flexibility in mass set definitions. Normally, the mass set is made up of several groups of masses that have the same nominal mass. To view the mass set contents, you must have first sent the "MASSSETx" command to specify the mass set (1, 2, or 3). This "opens" the mass set for reading, and returns the data for the first mass in the set. Then you send the "MASSSET" command repetitively to retrieve the additional masses in the set one at a time. They will be ordered in loading order. Three comma delimited fields are returned: nominal: The nominal mass value (kg) true: The true mass value (kg) Id: The mass Id (1..10)
	The Id orders the masses that are part of the same group that have the same nominal mass. If there are five (5) 10 kg masses, then they are identified as #1 through #5, and are loaded in this order. When you have reached the end of the mass set, an "ERR #30" is returned. You should then send the "MASSSET0" command to "close" the mass set. To define the mass set contents, you must first send the "MASSSETx=nominal, true" command to specify the mass set (1, 2, or 3) and to set the nominal and true mass values for the first mass in the set. With a manual mass set, the first mass in the set is always the special case "make up" mass that is always be loaded first, regardless of it's mass value; with an AMH mass set the it is the first main mass. This erases the current mass set and "opens" the mass set for writing. Then you send "MASSSET=nominal,true" one at a time. They must be ordered in loading order. Three comma delimited fields are returned: nominal: The nominal mass value (kg) true: The true mass value (kg) Id: The mass Id (1..10) The Id orders the masses that are part of the same group that have the same nominal mass. If there are five (5) 10 kg masses, then they are identified as #1 through #5, and are loaded in this order. When you have added all of the masses, send the "MASSSET0" command to "close" the mass set.
Example	Typical command: ""MASSSET1" Typical reply: "4.50, 4.5000012, 1" Typical command: ""MASSSET" Typical reply: "5.00, 5.0000008, 1" Typical command: ""MASSSET" Typical reply: "5.00, 5.0000014, 2" Typical command: ""MASSSET" Typical reply: "5.00, 5.0000011, 3" Typical command: ""MASSSET" Typical reply: "5.00, 5.0000004, 4" Typical command: ""MASSSET0" Typical reply: "MASSSET0"
Error	ERR #1 x mass set # is invalid ERR #2 The nominal mass value given is invalid ERR #3 The true mass value not within 10% of the nominal mass ERR #29 The mass set has not been "opened" yet ERR #30 You are at the end of the mass set
See Also	4.5.1.6, 4.1.5, MASS, MASSx

원문: Fluke Calibration PG7601 메뉴얼(영문) · 제조사 원문 자료입니다. 사양은 제조사 사정에 따라 변경될 수 있습니다.

MEDIA(=)	
Purpose	Read or set the PG7601-AF pressurized medium type for DUT head corrections.
Syntax	"MEDIA=mediaType" "MEDIA"
Default	"MEDIA=N2
Argument	mediaType: "N2", "He", "Air", "Oil", "H2O" or user set density value.
Remarks	You must select one of five (5) available media for use with the PG, of specified a user defined density. This allows PG7601-AF to utilize the correct internal calculations for head corrections.
Example	Typical command: "MEDIA=Air" Typical reply: "Air"
Error	ERR #1 Media type is invalid
See Also	4.3.7 PRINCIPLE, 4.5.3.1

MEM	
Purpose	Read the status of the internal data RAM since the last power up.
Syntax	"MEM"
Default	N/A
Argument	N/A
Remarks	On power up a memory test is run to check the integrity of the internal data RAM. If the memory has been corrupted then "FATAL MEMORY LOSS" will be displayed to alert the user. The status memory can be read from a remote computer. Typical causes of memory fault: Upgrade of PG7601-AF software Connection of a cable to PG7601-AF when PG7601-AF is on Failure of internal memory Return string: "MEM=1" System is OK "MEM=0" System memory has been corrupted and the default operating parameters were loaded into memory
Example	Typical command: ""MEM" Typical reply: "MEM=1"
Error	None

MMODE	
Purpose	Get or set the PG measurement mode and reference.
Syntax	"MMODE" "MMODE=*mode*"
Argument	Mode: "AATM" Absolute mode with atmospheric reference "AVAC Absolute mode with vacuum reference "G" Gauge mode with atmospheric reference "D" Differential mode
Remarks	This command sets both the unit mode and the measurement reference. This can also be accomplished using the UNIT and the VAC commands. Differential mode is a special case and requires special conditions to run. Differential mode is not normally supported with PG7601-AF
Example	Typical command: "MMODE" Typical reply: "AATM"
Error	ERR #1 Invalid mode specified ERR #32 Altitude or airspeed unit not allowed with atmospheric reference.
See Also	4.3.4, 4.3.3, UNIT, VAC

MRES(=)	
Purpose	Read or set the PG7601-AF mass loading resolution.
Syntax	"MRES=massResolution" "MRES"
Default	"MRES=0.01g
Argument	MassResolution: The mass loading resolution in grams.
Remarks	You must set the resolution that PG7601-AF uses to convert user provided pressure requests into mass loads. PG7601-AF will calculate the required mass load to the precision defined by the mass loading resolution. The maximum resolution is 0.001 gram, and the minimum is 100 g. The mass resolution is automatically set to 100 g whenever an AMH mass set is made active or AMH is initialized.
Example	Typical command: ""MRES=.01" Typical reply: "MRES=0.010g"
Error	ERR #1 The resolution given is greater that 100g of less than 0.001 g
See Also	4.3.9.6

 © 2008 DH Instruments, a Fluke Company

원문: Fluke Calibration PG7601 메뉴얼(영문) · 제조사 원문 자료입니다. 사양은 제조사 사정에 따라 변경될 수 있습니다.

MROT(=)	
Purpose	Read or set the manual motorized piston rotation status.
Syntax	"MROT=rotationStatus" "MROT"
Default	"MROT=0"
Argument	Rotation Status: " 1" Accelerates the piston rotation. "-1" Decelerates (brakes) the piston rotation. " 0" Aborts current acceleration or deceleration
Remarks	You may manually control the rotation of the PG7601-AF piston (with bell installed) instead of using the auto rotate function (see the "AROT" command). The PG7601-AF will only rotate the piston if the bell is installed and the piston position is not close or against the top or bottom of the piston travel. The rotation system will shut off when needed to maintain a 50 % duty cycle to allow the system to cool, with a maximum accumulated on time of 25 seconds at a time. You should not typically use this command when the auto-rotate feature is enabled.
Example	Typical command: "MROT=1" Typical reply: "MROT=1"
Error	ERR #1 The argument given is not "-1", "0" or a "1"
See Also	4.3.13, 4.3.8, AROT

MR	
Purpose	Read the current mass load variables.
Syntax	"MR"
Default	N/A
Argument	N/A
Remarks	The actual true mass value, main mass nominal value, and trim mass values of the mass currently loaded are retrieved with this command. The data is provided in the following comma delimited format: aa.aaaaaa kg, mm.m kg, t.ttt g aa.aaaaaa kg: The actual total true mass value. mm.m kg: The total of the main masses nominal values (mass ≥ 0.1 kg). t.tttg: The trim mass loaded. These values are the result of a user provided pressure request or mass request. Since the actual total true mass value is a result of the true mass values, it's resolution is not controlled by the "MRES" command.
Example	Typical command: ""MR" Typical reply: "20.687002 kg, 20.6 Kg, 77.000 g"
Error	None
See Also	4.1.5

MS=	
Purpose	To set the nominal main (mass ≥ 0.1 kg) and trim mass to be loaded on PG7601-AF. The actual mass value used is determined by the true mass values of the selected mass set.
Syntax	"MS=mm.m Kg, t.ttt g"
Default	N/A
Argument	mm.m kg: The total of the main masses nominal values to be loaded. t.ttt g: The trim mass to be loaded.
Remarks	The user may specify a target for PG7601-AF in mass or pressure. When a mass target is given, the selected mass set is used to determine the masses available for loading. PG7601-AF starts at the largest value smallest numbered main mass until enough mass has been found to satisfy the main mass request. The trim mass is then added to the total of the required true mass values. Then a series of actions may occur: If auto rotate feature is enabled, the masses are decelerated to a stop. If the auto generation piston raise feature is enabled, the piston is be lifted. If an AMH mass handler is active, the appropriate mass is loaded. If the auto generation is enabled, the external PPC attempts to float the piston. If the automatic rotation is enabled, the masses are rotated when floating. The PG7601-AF achieves a *Ready* condition at the requested mass load. This command replies before execution of the steps actually starts. The "PR" command can be used to monitor the status of these events and determine when the PG7601-AF measurement is *Ready*. The "ABORT" command or changing to local front panel operation using the **[ESCAPE]** key, the LOCAL command or a GPIB go to local function stops the operation.
Example	Typical command: ""MS=5, 50" Typical reply: "5.0 kg, 50.000 g"
Error	ERR #1 If the first argument is invalid ERR #2 If the second argument is invalid
See Also	4.3.12, 4.1.5, 4.3.11, 4.3.11.1, PR , PS=, ABORT, AROT, PGEN

원문: Fluke Calibration PG7601 메뉴얼(영문) · 제조사 원문 자료입니다. 사양은 제조사 사정에 따라 변경될 수 있습니다.

OHMS	
Purpose	Read the mounting post and the ambient PRT resistances.
Syntax	"OHMS"
Default	N/A
Argument	N/A
Remarks	The mounting post and ambient temperature are measured and used for internal calculations. This command always returns the last measured value using the internal PRTs. If the current Setup does not specify "INTERNAL" as the measurement source, this measurement is not made, and the value returned is a measurement made when the unit was powered up.
Example	Typical command: "OHMS" Typical reply: "109.519 ohms, 110.995 ohms" The two measurements are comma delimited. The first field is the mounting post PRT resistance. The second field is the ambient PRT resistance.
Error	None
See Also	*7.2.2.2*, 7.3.4

PCTx(=)	
Purpose	Set or read the source for the mounting post temperature measurement. Also optionally sets the USER defined measurement.
Syntax	"PCTx=source, meas" "PCTx=source" "PCTx"
Default	20 °C if the source is DEFAULT
Argument	x: The setup number from 1 to 21. See the SETUP command. Setup is reserved for remote command use only. Source: The measurement source. This can be INTERNAL, DEFAULT, or USER. Meas: The current measurement used. This can only be set if the source argument is USER. If specified, the limit for this argument is 0 to 40 °C
Remarks	PG7601-AF has an internal mounting post PRT sensor whose measurements can be used as the value of piston-cylinder temperature in calculations. You may also request that another source be used for this measurement. The measurement source can be the internal sensor, a user defined fixed value, or the manufacturer's fixed default value. The Setup number allows 19 separate configurations for each sensor. The SETUP command selects which of the 20 to use. Setup number 1 is restricted as INTERNAL only to serve as manufacturer's fixed Setup, and cannot be changed. The meas argument is used to allow the user to define a fixed value if the source is set to USER. The reply will always include the source and the meas fields.
Example	Typical command: "PRT2=USER,25" Typical reply: "USER,25dC" Typical command: "PRT9=INTERNAL" Typical reply: "INTERNAL, 21.34 dC"
Error	ERR #1 The setup number x is invalid ERR #2 The source argument is invalid ERR #3 The meas argument is invalid
See Also	4.4, 1.1.2.2, SETUP

PGEN(=)	
Purpose	Set or read the piston float target for automatic piston floating (using the PPC3-7M-AF pressure controller). Also can turn the automated pressure generation function OFF and ON.
Syntax	"PGEN=m.m" "PGEN"
Default	PGEN=0.0 (off)
Argument	N/A
Remarks	In the PG7601-SYS-AF system, a PPC3-7M-AF pressure controller is included to automatically float the PG7601-AF piston. This command specifies the piston position to which the automated pressure generation function sets the piston when floating or refloating it. The auto generation stops pressure control once the piston passes the piston float target and then does not control again until the piston falls outside of the piston position "Ready" limits (see PISTONRDY cmd). Setting PGEN to 0 turns OFF automated pressure generation in ths same manner as turning it OFF locally from the PG Terminal.
Example	Typical command: "PGEN=1.5" Typical reply: "PGEN=1.5mm"
Error	ERR #1 The argument is invalid
See Also	4.3.9, PPC, READYx

 © 2008 DH Instruments, a Fluke Company

원문: Fluke Calibration PG7601 메뉴얼(영문) · 제조사 원문 자료입니다. 사양은 제조사 사정에 따라 변경될 수 있습니다.

PISTONRDYx(=)		
Purpose	Read or set a piston-cylinder module's rotation rate limits.	
Syntax	"PISTONRDYx=MinRPM, MaxRPM "PISTONRDYx"	
Default	N/A	
Argument	MinRPM: MaxRPM:	The minimum allowed rotation speed at which the measurement becomes *Ready* [rpm]. If autorotate is enabled, this is also the point at which the rotation system engages. This does not apply if the bell is not loaded. The target maximum rotation rate when automated rotation engages to rotate the piston. This does not apply if the bell is not loaded.
Remarks	There are a number of conditions to allow the PG7601-AF measurement to become *Ready*. These two piston-cylinder module dependent limits determine when the rotation rate is in the correct limits.	
Example	Typical command: Typical reply:	"PISTONRDY1" "10, 50"
Error	ERR #1..2	x invalid first or second argument
See Also	4.1.3, 4.1.3.2, 4.5.1.1, READYx	

PISTONVARx(=)		
Purpose	Read or set a piston-cylinder module's characteristics.	
Syntax	"PISTONVARx=Sn,PCalpha,CylAlpha,DefCoef,Tension,Offset, k (P)" "PISTONVARx"	
Default	N/A	
Argument	x: Sn: Pcalpha: CylAlpha: DefCoef: Tension: Offset: k(P):	The piston-cylinder number 1, 2, or 3… The piston-cylinder serial number (4 digits max) The piston temperature coefficient The cylinder temperature coefficient The piston-cylinder Ae pressure coefficient The surface tension The reference level offset from the mounting post reference mark The mass to fall rate coefficient for tare piston-cylinders used in high line differential mode.
Remarks	You may define up to seventeen different piston-cylinder modules to use with PG7601-AF using the PISTONx, and the PISTONVARx command is then used to edit the piston-cylinder set physical information.	
Example	Typical command: Typical reply:	"PISTONVAR1" 225, 5.5000 10-6/dC, 4.5000 10-6/dC, 5.3800 10-6/MPa, 0.0000000N/m, 32.4600mm
Error	ERR #1..7	x invalid first through seventh argument
See Also	4.5.1.1	

PISTONx(=)		
Purpose	Read or set a piston-cylinder module's general information.	
Syntax	"PISTONx=Sn,Area,Mass,Density,CalCert#,CertDate; EditDate" "PISTONx"	
Default	N/A	
Argument	x: Sn: Area: Mass: Density: CalCert#: CertDate: EditDate:	The piston-cylinder module number 1 through 17 The piston-cylinder module serial number The piston-cylinder module effective area (mm2) The piston assembly mass (kg) The piston assembly apparent density (kg/m3) The calibration report number (dd/mm/yy) The calibration report date (dd/mm/yy) The date that this data was last edited
Remarks	You may define up to seventeen different piston-cylinder sets to use with the PG7601-AF using the PISTONx, and PISTONVARx commands. The PISTONx command is used to edit the piston-cylinder set general information.	
Example	Typical command: Typical reply:	"PISTON1" "225, 196.110000 mm2, 0.200000kg, 4233.0Kg/m3, 100, 19990115, 19990120
Error	ERR #1..7	x invalid first through seventh argument
See Also	4.5.1, 4.5.1.1, PISTONVARX (=)	

원문: Fluke Calibration PG7601 메뉴얼(영문) · 제조사 원문 자료입니다. 사양은 제조사 사정에 따라 변경될 수 있습니다.

PISTON(=)	
Purpose	Read or set the current piston-cylinder module.
Syntax	"PISTON=n" "PISTON"
Default	N/A
Argument	n: The piston-cylinder module number 1 through 17.
Remarks	You may define up to seventeen different piston-cylinder modules to use with PG7601-AF using the PISTONx and PISTONVARx commands. The PISTON(=) commands are then used to select the currently active piston-cylinder module. A piston-cylinder module must be defined before selecting it.
Example	Typical command: "PISTON" Typical reply: "PISTON=1"
Error	ERR #1 n invalid or specifies a piston-cylinder set that is not defined
See Also	0, 4.5.1.5

PPC(=)	
Purpose	Send a command to an external pressure generation/control component connected to COM3 of the PG7601-AF.
Syntax	"PPC=xxx"
Default	N/A
Argument	N/A
Remarks	This command allows communications to an external pressure generation/control component through COM3 of PG7601-AF. COM3 must be previously set up to the correct settings to match the pressure generation/control component R2323 interface. The PG7601-AF auto pressure generation should be disabled before using the PPC(=) command (see the "PGEN" command) to prevent interference with the PPC's auto generation functions. Any reply from the component will be returned until another command is sent to the PG7601-AF.
Example	Typical command: "PPC=PR" Typical reply: "R 561.0 psi a"
See Also	4.3.9, PGEN

PPOS	
Purpose	Read the current piston position rate of vertical movement.
Syntax	"PPOS"
Default	N/A
Argument	N/A
Remarks	The PG7601-AF piston position has a total travel of 9 mm. This piston position is represented from -4.5 mm (all the way down, LSTOP) to 4.5 mm (all the way up, HSTOP). This measurement is updated every 2 seconds, along with the piston drop rate which is updated when the system is stable. These two fields are comma delimited.
Example	Typical command: "PPOS" Typical reply: "-3.44 mm, 0.5 mm/min"
Error	None
See Also	4.1.5, 4.1.4, 4.3.5.1

PRTPC	
Purpose	Set or read the mounting post PRT temperature sensor calibration data.
Syntax	"PRTPC=Sn, slope, zero, report number, cal date" "PRTPC"
Default	1, 0.3896, 100.00, 1, 19880101
Argument	Sn: The serial number from 0 to 9999 slope: The PRT slope (Ohms/0 °C) zero: The PRT resistance at 0 °C cert number: The calibration report number cal date The calibration date (yyyymmdd)
Remarks	The mounting post PRT data can be read or set using this command. Care must be taken to ensure that you do not accidentally overwrite this date.
Example	Typical command: "PRTPC" Typical reply: "103, 0.3896 ohms/dC, 99.999500 ohms, 1001, 19990115
Error	ERR #1..5 If the arguments are missing or invalid ERR #7 The date is invalid
See Also	*7.3.4*

 © 2008 DH Instruments, a Fluke Company

원문: Fluke Calibration PG7601 메뉴얼(영문) · 제조사 원문 자료입니다. 사양은 제조사 사정에 따라 변경될 수 있습니다.

PR	
Purpose	Read the current calculated pressure value and *Ready/Not Ready* status.
Syntax	"PR"
Default	N/A
Argument	N/A
Remarks	The current pressure resulting from the mass loaded is calculated every 2 seconds. It is displayed in the current pressure units. The data string also contains ready information. The string is in the format "ssx ddddddd uuuum". "ss": The first two characters indicate the ready status. This is determined by the piston position, rotation speed, AMH automated mass handler status, and the pressure generation status: "R " for *Ready*, "NR" for *Not Ready*. "x": This 3rd character indicates any ongoing activity by the PG7601-AF to reach a *Ready* condition. Any character except a " " (whitespace) will keep the PG ready status *Not Ready* ("NR"): " " indicates no activity. "D" indicates that the auto rotate feature is decelerating the mass before a mass load occurs. "R" indicates that the piston is being raised by a pressure controller before a mass load occurs. "L" indicates that the AMH automated mass handler is busy loading the required mass load. "W" indicates that the AMH has completed a mass load and is waiting for a "RESUME" command to continue operations. "E" indicates that an AMH error has occurred. You can use the "AMHERR" command to get further AMH error information. "V" Indicates that the PG is in absolute by vacuum mode and waiting to reach the required vacuum limit before continuing. Current residual pressure exceeds the vacuum limit. "ddddddd": This 8 digit numeric field indicates the current calculated pressure in the current pressure units. It has 3 leading spaces before it. "uuuu": This 4 character field indicates the current pressure unit.(see "UNIT") "m": This character indicates the measurement mode. (see "MMODE").
Example	Typical command: "PR" Typical reply: "NR 7.003647 kPa g" (*NotRready*) "R 7.003647 kPa g" (*Ready*) "NRL 7.003647 kPa g" (*NotRready*, busy loading mass)
Error	None
See Also	4.1.3, 4.3.8, 4.3.9, 4.3.11, MS=, PS=, RESUME, AMHERR

원문: Fluke Calibration PG7601 메뉴얼(영문) · 제조사 원문 자료입니다. 사양은 제조사 사정에 따라 변경될 수 있습니다.

PS=	
Purpose	To set a new PG7601-AF target pressure.
Syntax	"PS=targ"
Default	N/A
Argument	N/A
Remarks	The pressure command is interpreted in the current pressure unit of measure. If a pressure is requested that is not in the range of operation, the pressure request isl not implemented and an error message is returned. The mass load needed to set the pressure is calculated using the current mass loading resolution and the measured pressure resulting from this mass is calculated. . Then a series of actions can occur: If the auto rotate feature is enabled, the masses are decelerated to a stop. If the auto generation piston raise feature is enabled, the piston is lifted. If an AMH automated mass handler is active, the appropriate mass is loaded. If an AMH is active and the mass resolution is set to less than 100g, the PG7601-AF waits for the "RESUME" command to be sent before proceeding. This gives the host program the opportunity to instruct the operator to load trim mass before pressure generation and piston rotation proceed. If auto generation is enabled, the external PPC attempts to float the piston. If the automatic rotation is enabled, the masses are rotated when floating. This command replies before these actions actually start. The "PR" command can be used to monitor the status of these events and determine when the PG7601-AF measurement is actually *Ready*. The "ABORT" command or changing to local front panel operation using the **[ESCAPE]** key, the LOCAL command or a GPIB go to local function will stop the operation.
Example	Typical command: "PS=100" Typical reply: "100.0000 kPa g"
Error	ERR #1 If target results in an invalid mass load
See Also	4.3.12, 4.3.9.6, 4.3.11, 4.3.3, MS=, PR, UNIT=, RESUME

READYx(=)	
Purpose	Set or read the ready criteria for a specific "Setup"
Syntax	"READYx=USER, RdyBand, RdyVac" "READYx=DEFAULT" (specifies to use fixed defaults) "READYx"
Default	"READYx=USER, 2.5mm, 5Paa"
Argument	x: The setup number whose ready criteria are to be accessed (1 to 20) RdyBand: Piston position "ready band" (±mm) VacLim: The vacuum ready limit (Paa)
Remarks	The PG7601-AF uses the piston position and the vacuum measurement (PG7601-AF in absolute by vacuum mode only) to determine if the *Ready/Not Ready* condition. Other factors can also keep the PG7601-AF measurement from being *Ready* (such as an active external pressure controller, active rotation system, active AMH automated mass handler). The piston position must be within the ready band ("RdyBand") to allow a ready condition. In absolute by vacuum measurement mode, the vacuum measurement must also be below the Vacuum Limit ("VacLim"). Each "Setup" defined for the PG7601-AF can have a different set of *Ready/Not Ready* criteria. If the "DEFAULT" conditions are specified, then these values are fixed and cannot be changed. The piston position ready limits define the piston position beyond which the GEN function refloats the piston when GEN is ON. Piston rotation rate limits are in the individual piston-cylinder digital ID.
Example	Typical command: "READY2=USER, 3, 10" Typical reply: "USER, 3.0mm, 10Paa"
Error	ERR #1,2,3,4 Invalid arguments
See Also	4.1.3, 4.5.1.1, 4.4 SETUP, VACP, PISTONRDYx(=), READYCK(=)

 © 2008 DH Instruments, a Fluke Company

원문: Fluke Calibration PG7601 메뉴얼(영문) · 제조사 원문 자료입니다. 사양은 제조사 사정에 따라 변경될 수 있습니다.

READYCK(=)	
Purpose	To set or check the ready check flag, or, used to determine if a *Not Ready* condition has occurred.
Syntax	"READYCK=1" "READYCK"
Default	READYCK=0
Argument	N/A
Remarks	The internal ready check flag is cleared whenever PG7601-AF reaches a *Not Ready* (NR) condition. The "READYCK" command will return the status of this flag. This flag can be set only by sending the "READYCK=1" command while PG7601-AF is in a *Ready* condition. If you send the "READYCK=1" command when PG7601-AF is in a *Not Ready* (NR) condition, the reply will be "READYCK=0". If you set READYCK=1 when PG7601-AF achieves a *Ready* (R) condition, you can use READYCK later to determine if a *Not Ready* (NR) condition has occurred. If NR has occurred READYCK returns "0". If NR has not occurred READYCK returns "1".
Example	Typical command: "READYCK=1" Typical reply: "READYCK=1" (If PG7601-AF condition is *Ready*) Typical reply: "READYCK=0" (if PG7601-AF condition is *Not Ready*)
Error	ERR #1 If n is not a 1
See Also	4.1.3

REMOTE	
Purpose	To place PG7601-AF into a remote lock-out mode.
Syntax	"REMOTE"
Default	N/A
Argument	N/A
Remarks	A REMOTE command deactivates the front panel. All front panel controls will be disabled. The REMOTE command can only be canceled by a LOCAL command or by turning off PG7601-AF power then reapplying it.
Example	Typical command: "REMOTE" Typical reply: "REMOTE"
Error	None
See Also	LOCAL

RESET	
Purpose	To reset all operating parameters to factory default settings.
Syntax	"RESET"
Default	N/A
Argument	N/A
Remarks	The reset command can be given to return the PG7601-AF to a known state. This command is the same as locally executing a "Reset Sets".
Example	Typical command: "RESET" Typical reply: "RESET"
Error	None
See Also	4.5.9.1

RESUME	
Purpose	Resume the suspended process of setting a new pressure.
Syntax	"RESUME"
Default	N/A
Argument	N/A
Remarks	After setting a new target pressure using the "PS=" command the process of setting the pressure may be suspended after the PG7601-AF calculates the new target mass load. This is to allow the host program to instruct the operator to load mass if necessary and wait for confirmation from the operator that the mass loading operation is complete. The operator can load the mass without interference from AutoRotate or AutoGen if they are enabled. The "RESUME" command continues the pressure setting process, starting AutoRotate and AutoGen again if they are enabled. The activity status field of the "PR" query can be used to determine when the PG7601-AF has suspended operation and is waiting for the "RESUME" command.
Example	Typical command: "RESUME" Typical reply: "RESUME"
Error	None
See Also	4.3.11, 4.1.3, PS=, PR, MR, RESUME(=mode)

원문: Fluke Calibration PG7601 메뉴얼(영문) · 제조사 원문 자료입니다. 사양은 제조사 사정에 따라 변경될 수 있습니다.

RPMx	
Purpose	To send a command through PG7601-AF to a remote **DHI** RPM connected to the PG7601-AF COM2 port.
Syntax	"RPMx,dddd" "RPMSx,dddd"
Default	N/A
Argument	x: 1-99
Remarks	x is the address of the RPM1. If x is omitted then the default address is 1. Address 99 is a global address to send a command to all RPM1s that are connected to the COM2 port. You must have an RPM connected and communicating properly for this command to work properly. The RPMS command is used to perform a write to the EPROM of the RPM1. This command should be used with caution because a given RPM1 register is only guaranteed for 10 000 rewrites. See the RPM1 manual for further information on writing to the EPROM. A "RPM,DP" command has the same syntax as sending *0100DP to the RPM from a remote computer. A "RPM,DP=6" has the same syntax as sending *0100EW*0100DP=6 to the RPM from a remote computer. The commands available are given in the RPM1 or RPM1 manual depending on the model. They allow you to change the RPM1 resolution, integration time, etc. The reply will be whatever the RPM1 returns.
Example	Typical command: "RPM,DP" or "RPM1, DP" Typical reply: "*0001DP=6"
Error	None
See Also	4.4, 4.5.5.4 4.5.5.5 UDD=

RESUME(=*mode*)	
Purpose	Sets the resume "mode".
Syntax	"RESUME=*mode*"
Default	"RESUME=1"
Argument	*Mode:* '0' "RESUME" command is not needed to complete a remote pressure set operation . '1' "RESUME" command is needed to complete any remote pressure set operation
Remarks	"RESUME=1" is needed only if it is necessary for PG7601-AF operation to pause after a pressure target has been given to allow the operator to load mass. This is the case when using a manual mass set or when using AMH automated mass handling but manually loading additional masses to load with resolution higher than the AMH mass set resolution.
Example	Typical command: "RESUME=1" Typical reply: "RESUME=1"
Error	None
See Also	4.3.11, 4.1.3, PS=, RESUME

RESUME	
Purpose	Resume the suspended process of setting a pressure.
Syntax	"RESUME"
Default	N/A
Argument	N/A
Remarks	When "RESUME=1" using RESUME*(=mode),* after setting a new target pressure using the "PS=" command, the process of setting the pressure is suspended after the PG7601-AF calculates the new target mass load (and loads the if an AMH automatic mass handler is active). The pause is too allow a host program to instruct the operator to load trim mass if desired. The RESUME command ends the pause, allowing the auto-rotate and auto-generate functions to execute is enabled. The activity status field of the "PR" field can be used to determine when the PG7601-AF has suspended operation and is waiting for the "RESUME" command.
Example	Typical command: "RESUME" Typical reply: "RESUME"
Error	None
See Also	4.3.11, 4.1.3, PS=, PR=, RESUME*(=mode)*

 © 2008 DH Instruments, a Fluke Company

원문: Fluke Calibration PG7601 메뉴얼(영문) · 제조사 원문 자료입니다. 사양은 제조사 사정에 따라 변경될 수 있습니다.

SETUP(=)	
Purpose	To change or read the current SETUP to be used.
Syntax	"SETUP=n" "SETUP"
Default	"SETUP=1"
Argument	N/A
Remarks	Up to 19 SETUP files can be created by the user to allow quick change from one configuration of pressure calculation sources to another. Each configuration can specify the source of the ambient measurements, the gravity, and the *Ready/Not Ready* criteria. The "AMBHx", "AMBPx", "AMBTx", "READYx", "VACP" and "PCTX" commands reference the SETUP command. The first setup ("SETUP=1") is reserved for the factory default setup, and cannot be changed. Setup #21 is reserved for remote access only. Selecting a setup that references an external device (barometer or vacuum gauge) can take up to 5 seconds to reply.
Example	Typical command: "SETUP=2" Typical reply: "2"
Error	ERR #1 If setup is <1 or >21
See Also	4.4, AMBHx", "AMBPx", "AMBTx", "READYx", "VACP", "PCT

SN	
Purpose	To read the PG7601-AF serial number.
Syntax	"SN"
Default	N/A
Argument	N/A
Remarks	Each PG7601-AF is assigned a serial number. This command reads this number back.
Example	Typical command: "SN" Typical reply: "201"
Error	None

SPEED	
Purpose	To read the current piston rotation speed and rotation decay (deceleration).
Syntax	"SPEED"
Default	N/A
Argument	N/A
Remarks	The current piston rotation speed and decay rate are returned separated by a comma. The decay rate is returned as '0' if there is not enough valid data to calculate the rate. The speed will also be returned as '0' if the bell is not installed.
Example	Typical command: "SPEED" Typical reply: "44.2 rpm, 2.3 rpm/min
Error	None
See Also	4.3.5

TIME(=)	
Purpose	To read or set the internal real time clock.
Syntax	"TIME=HH:MMxp" "TIME"
Default	N/A
Argument	The time is in the HH:MMxp format. HH: The hour 1 to 12 MM: The minute 00 to 59 xp: "am" or "pm"
Remarks	The internal time clock is part of the internal calendar. The seconds are always set to "00" when setting the time.
Example	Typical command: "TIME=8:31PM" Typical reply: "8:31pm"
Error	ERR #1 If invalid time argument
See Also	4.5.4.3

UCOEF	
Purpose	To read the conversion coefficient used to convert Pascal to the current pressure unit of measure.
Syntax	"UCOEF"
Default	N/A
Argument	N/A
Remarks	Use this command to read the pressure conversion coefficient used to convert pressure in Pascal to the displayed pressure units. Pressure in Pascal multiplied by this coefficient yields the pressure in the PG7601-AF units.
Example	Typical command: "UCOEF" (current units are "kPa") Typical reply: "1.000000e-003"
Error	None

원문: Fluke Calibration PG7601 메뉴얼(영문) · 제조사 원문 자료입니다. 사양은 제조사 사정에 따라 변경될 수 있습니다.

See Also	9.1.1, 4.3.3, UNIT

UDD(=)		
Purpose	To set or retrieve the settings for the user defined external barometer.	
Syntax	"UDD=label,reqstr,skip,coef" "UDD"	
Default	N/A	
Argument	label: Reqstr: skip: coef:	A user defined barometer label to identify this setup (1 to 3 ASCII char). The text string to be sent to the external barometer every 2 seconds to query it for a pressure measurement. It must consist of up to 20 printable ASCII characters only. The number of leading characters to ignore from the external barometer's reply. The pressure conversion coefficient that PG7601-AF will multiply the external barometer reply by to result in a measurement in Pascal.
Remarks	An external barometer must be defined first by the user before being selected to be used as source for atmospheric pressure values instead of the PG7601-AF internal barometer. The external barometer must accept the carriage return/line feed terminated request string every 2 seconds, and reply with a carriage return or carriage return/line feed terminated reply within the 2 second cycle. The COM2 port must also be setup properly according to the barometer's communications settings. After setting up the COM2 port and defining the device, you must then use the "AMBPx" and "SETUP" commands to direct PG7601-AF to use the external barometer if you want this device to be used as the source of atmospheric pressure values.	
Example	Typical command: Typical reply:	"UDD=DEV, PR, 4, 1000" (ext barometer is in kPa) "DEV, PR, 4, 1000.000"
Error	ERR #1 ERR #2 ERR #3 ERR #4	label must not exceed 3 characters request string must not exceed 20 characters # of char to ignore must be 1 to 80 user defined coefficient cannot be 0
See Also	4.5.5.4, 4.4, AMBPx, SETUP	

UDU(=)		
Purpose	To set or retrieve the USER DEFINED UNIT (use defined pressure unit of measure).	
Syntax	"UDU=uuuuu,cccccc" "UDU"	
Default	UDU not defined	
Argument	uuuuu= ccccc=	User unit label (five characters maximum) User coefficient (cannot be <=0)
Remarks	The USER COEFFICIENT (UCOEF) is a value that is used to convert the current pressure units to Pascal. You may assign up to 4 characters for the unit label. When selecting the unit to choose using the "UNIT" command, add a trailing 'a' to specify an absolute unit, else the unit will be a gauge unit.	
Example	Typical command: Typical reply: Pressure in Pa = pressure in units/UCOEF	"UDU=MyUn,.0015" "MyUn,.0015"
Error	ERR #1 ERR #2	uuuuu must not exceed 4 characters user defined coefficient cannot be 0
See Also	4.5.2, 9.1.1, UNIT, UCOEF	

 © 2008 DH Instruments, a Fluke Company

원문: Fluke Calibration PG7601 메뉴얼(영문) · 제조사 원문 자료입니다. 사양은 제조사 사정에 따라 변경될 수 있습니다.

UDV(=)	
Purpose	To set or retrieve the settings for the user defined external vacuum gauge.
Syntax	"UDV=label,reqstr,skip,coef" "UDV"
Default	N/A
Argument	label: A user defined vacuum gauge label to identify this setup (1 to 3 ASCII char). Reqstr: The text string to be sent to the external vacuum gauge every 2 seconds to query it for a pressure measurement. It must consist of up to 20 printable ASCII characters only. skip: The number of leading characters to ignore from the external vacuum gauge's reply. coef: The pressure conversion coefficient that PG7601-AF will multiply the external vacumm sensor's reply by to result in a measurement in Pascal.
Remarks	An external vacuum gauge must be defined first by the user before being selected to be used as a source of vacuum pressure under the PG7601-AF bell jar instead of the internal vacuum sensor. The external vacuum gauge must accept the carriage return/line feed terminated request string every 2 seconds, and reply with a carriage return or carriage return/line feed terminated reply within the 2 second cycle. The COM2 port must also be setup properly according to the vacuum gauge's communications settings. After setting up the COM2 port and defining the device, you must then use the "VACPx" and "SETUP" commands to if you want the PG7601-AF to use the the external vacuum gauge as the source of values of vacuum in the PG7601-AF bell jar. It is also possible to use both an external barometer and an external vacuum sensor using the PG COM2 port. The barometer must be an RPM3 or RPM4 plugged into the PG COM2 port, and selected as an active external barometer. The vacuum sensor is then plugged into the RPM3/RPM4's COM2 port. The RPM3/RPM4's COM2 port must be set to the same settings as the vacuum sensor.
Example	Typical command: "UDV=DEV, PR, 4, 100" (ext vacuum sensor is in mbar) Typical reply: "DEV, PR, 4, 100.0000"
Error	ERR #1 label must not exceed 3 characters ERR #2 request string must not exceed 20 characters ERR #3 # of char to ignore must be 1 to 80 ERR #4 user defined coefficient cannot be 0
See Also	4.5.5.5, 4.4, VACPx, SETUP, COM2

UL(=)	
Purpose	Set or read the upper limit of an external pressure generation/control component.
Syntax	"UL=xxxx" "UL"
Default	N/A.
Argument	xxxx= Controller's upper limit in the controller's pressure units
Remarks	An external pressure controller can have an upper limit set to prevent accidential overpressure conditions. The controller must be properly initialized prior to using this command. The reply will be in the controller's.format Please consult the controller's Operation and Maintenance Manual, UL Section, for details about it's upper limit and "UL" reply. Note that PCM pressure controllers are always set to the unit kPag
Example	Typical command: "UL=1000" Typical reply: "1000.00 kPa g"
Error	See the controller's manual for details about it's "UL" command. ERR #13 External controller not detected
See Also	4.3.9.3, PGEN

원문: Fluke Calibration PG7601 메뉴얼(영문) · 제조사 원문 자료입니다. 사양은 제조사 사정에 따라 변경될 수 있습니다.

UNIT(=)	
Purpose	Set or change the current pressure unit of measure and pressure measurement mode.
Syntax	"UNIT=xxxxx" "UNIT"
Default	"UNIT=MPa g" "UNIT=kPa g"
Argument	N/A
Remarks	The units in which PG7601-AF interprets and executes commands can be changed. The available units are: psi g psi a psi d psf g psf a psf d bar g bar a bar d mbarg mbara mbard Pa g Pa a Pa d kPa g kPa a kPa d MPa g MPa a MPa d MmHgg mmHga mmHgd InHgg inHga inHgd InWag inWaa inWad MmWag mmWaa mmWad kcm2g kcm2a kcm2d m (altitude available only with a vac reference) ft (altitude available only with a vac reference) Xxxxg xxxxa Xxxxd The gauge/absolute/differential trailing designator 'g', 'a' or 'd', always appears in the 5th character position. The gauge unit trailing designator 'g' does not have to be given to specify a gauge unit.
Example	Typical command: "UNIT=mbar" Typical reply: "mbarg"
Error	ERR #1 Invalid unit specified ERR #20 Vacuum must be enabled with absolute unit
See Also	4.3.3, 4.3.4, 4.5.2 UDU, UCOEF, MMODE

VACPx(=)	
Purpose	Set or read the source for the vacuum pressure measurement. Also optionally sets the USER defined measurement. This command is only valid for PG7601.
Syntax	"VACPx=source, meas" "VACPx=source" "VACPx
Default	INTERNAL
Argument	x: The Setup number from 1 to 21. See the SETUP command. Setup 21 is reserved for remote command use only. source: The measurement source. This can be INTERNAL, DEFAULT (normal), USER, RPM or the user defined vacuum "label" meas: The current measurement used in Paa. This can only be set if the source argument is USER. If specified, the limit for this argument is 0 to 99 Paa.
Remarks	PG7601-AF has an internal vacuum pressure gauge that can be used as the source of values of reference vacuum under the bell jar used in pressure calculations. You may also request that another source be used for this measurement. The range of the internal gauge is 0 to 20 Paa. The measurement source can be the internal gauge, a user defined fixed value, the manufacturer's fixed default value, an external **DHI** RPM or a user defined external vacuum gauge. If an external RPM or a user defined external vacuum is chosen, you must setup the COM2 port to the proper settings. It is also advised to set this up prior to selecting the setup to make the device active. If you specify "RPM" or the user defined barometer "label" , then all other barometer source setups set to "RPM" or the user defined barometer will change to this source, as it is a global selection. The SETUP function allows 19 separate source configurations for the various SETUP variables to be saved in 19 files. The SETUP command selects which of the files to make active. The SETUP command selects which of the 19 to use. Setup number 1 is restricted as INTERNAL only to serve as a manufacturer's fixed Setup, and cannot be changed.
Example	Typical command: "VACP2=USER,10" Typical reply: USER, 10.0 Paa" Typical command: "VACP9=INTERNAL" Typical reply: "INTERNAL, 13.2 Paa"
Error	ERR #1 The setup number x is invalid ERR #2 The source argument is invalid ERR #3 The meas argument is invalid
See Also	4.4, 4.5.5.5, SETUP, COM2, UDV

 © 2008 DH Instruments, a Fluke Company

원문: Fluke Calibration PG7601 메뉴얼(영문) · 제조사 원문 자료입니다. 사양은 제조사 사정에 따라 변경될 수 있습니다.

VAC(=)	
Purpose	To set or read PG7601-AF reference mode. This command is only valid for PG7601.
Syntax	"VAC=n" "VAC"
Default	VAC=0
Argument	n = 1: PG7601-AF is being operated with a bell jar and vacuum n = 0: PG7601-AF is being operated at atmospheric pressure
Remarks	You must let PG7601-AF know when you are operating under vacuum. The reported PG7601-AF measured pressure will then reference the vacuum.
Example	Typical command: "VAC=1" Typical reply: "VAC=1"
Error	ERR #1 If n not set to 1 or 0
See Also	4.3.4, MODE

VENT(=)	
Purpose	To vent the test pressure to atmosphere if an automated pressure generation/control component is being used for automatic pressure generation.
Syntax	"VENT=n"
Default	VENT=0
Argument	n = 1: Activates the vent procedure on an automated pressure generation/control component n = 0: Closes exhaust valve on an automated pressure generation/control component
Remarks	When n = 1 the external automated pressure generation/control component test pressure will quickly decrease to atmospheric.
Example	Typical command: "VENT=1" Typical reply: "VENT=1"
Error	ERR #1 If n not set to 1 or 0
See Also	4.3.9, PPC, PGEN

VER	
Purpose	Read the version number of the internal software.
Syntax	"VER"
Default	N/A
Argument	N/A
Remarks	The software version of the EPROM can be read.
Example	Typical command: "VER" Typical reply: "DH INSTRUMENTS, INC PG7302 Ver2.00"
Error	None

5.4 STATUS SYSTEM

The status system includes the status reporting system which reports general PG7601-AF events. The user can select which PG7601-AF events will cause a status change event. These events are then reported to the status system (bit7 and bit3 of the status byte register), which also must be configured for the STATus subsystem to generate the service requests described in Section 5.4.1, Status Reporting System.

There are two 16 bit event registers that make up the top layer of the status subsystem. The OPERation status register handles conditions that are normal for PG7601-AF. The QUEStionable status register handles events that could cause measurements to be made under questionable conditions.

Other registers layered below these two registers provide the structure necessary to handle the two RPT channels and to enable the events and event transitions. Bit15 of all of these registers is not used because Bit15 represents a sign bit on some computer systems.

원문: Fluke Calibration PG7601 메뉴얼(영문) · 제조사 원문 자료입니다. 사양은 제조사 사정에 따라 변경될 수 있습니다.

5.4.1 STATUS REPORTING SYSTEM

The PG7601-AF status reporting system is used to track and report system status and errors. The status subsystem is layered under and reports to the status reporting system. It follows the model of the IEEE Std 488.2 and works for the COM1 and the IEEE-488 port with slight differences. PG7601-AF can be programmed to respond to various status conditions by asserting the SRQ of the IEEE-488 interface. The COM1 port cannot be supported in this manner, so polling must be used.

5.4.1.1 STATUS BYTE REGISTER

PG7601-AF contains an 8 bit status byte register that reflects the general status of PG7601-AF.

Table 22. Status byte register

OPER (128)	RQS/MSS (64)	ESB (32)	MAV (16)	N/A (8)	ERROR (4)	N/A (2)	RSR (1)

This register is affected by the PG7601-AF reply output queue, the error queue, the Standard Event Status register, the Ready Event Status register, and the STATus subsystem.

(“∗STB?” or “∗SRE *n”)*

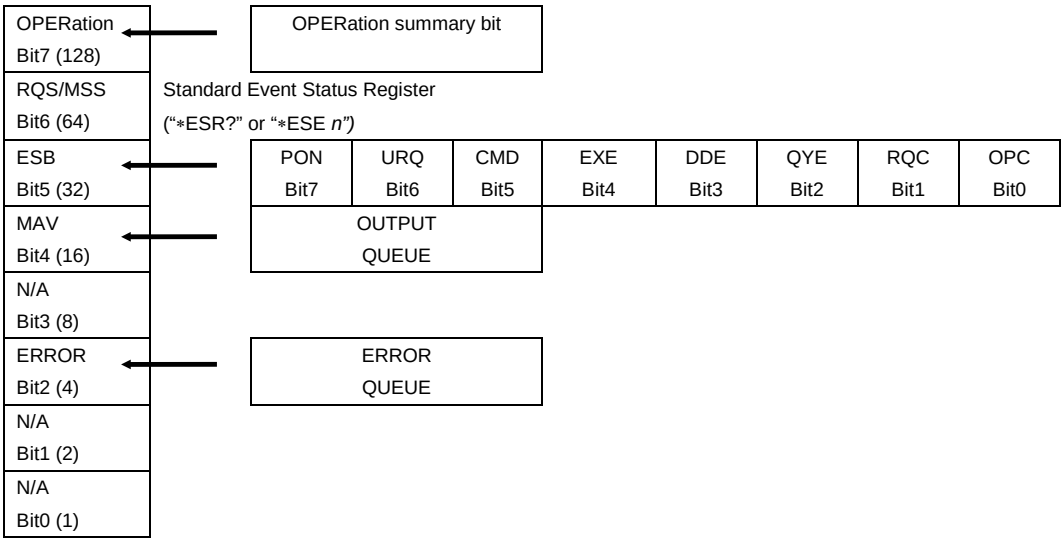

Figure 22. Status byte register

The status byte register can be read using the “*STB?” query, or by performing a serial poll on the IEEE-488 bus. If you read this using a serial poll then bit 6 is the RQS. If the “∗STB?” query is used, then bit 6 is the MSS bit. All of the other bits are common to both types of query.

© 2008 DH Instruments, a Fluke Company

원문: Fluke Calibration PG7601 메뉴얼(영문) · 제조사 원문 자료입니다. 사양은 제조사 사정에 따라 변경될 수 있습니다.

we measure, we calibrate, we validate.
㈜테솔 · www.tessol.com TS-TL-FLK-094 163 / 234
KOLAS 국제공인교정기관 · ISO/IEC 17025

TS-TL-FLK-094

Each of these status bits can cause an SRQ to occur. The Service Request Enable Register ("∗SRE" program message) determines which of these flags are able to assert the SRQ line. This enabled register has a matching set of bits that each will enable the designated bit to cause an SRQ, except for the RQS/MSS bit(s) which cannot cause an SRQ. If you set this register to 20 ($14 hex), an SRQ will occur if the MAV or the ERROR bit are set. The description of these bits are given as:

- **OPER**: OPERational event register summary bit (Bit 7)

  This bit is not supported by PG7601-AF.

- **RQS**: Requested Service (Bit 6)

  Indicates that the SRQ line of the IEEE-488 interface has been asserted by PG7601-AF. This bit is cleared when a serial poll is performed on PG7601-AF, and is a part of the status byte register when read using a serial poll. This bit does not apply if the COM1 port is being used.

- **MSS**: Master Summary Status (Bit 6)

  Indicates that an event or events occurred that caused PG7601-AF to request service from the Host, much like the RQS bit. Unlike the RQS bit, it is READ ONLY and can be only cleared when the event(s) that caused the service request are cleared.

- **ESB**: Event Summary Bit (Bit 5)

  Indicates if an enabled bit in the Standard Event Status Register became set. (See the section below.)

- **MAV**: Message Available Bit (Bit 4)

  Indicates that at least one reply message is waiting in the PG7601-AF IEEE-488 output queue.

- **ERR**: Error Queue not empty (Bit 2)

  Indicates that at least one command error message is waiting in the PG7601-AF IEEE-488 error message queue. Use the "SYSTem:ERRor?" query to get this message.

5.4.1.2 STANDARD EVENT REGISTER

PG7601-AF contains an 8 bit Standard Event Register that reflects specific PG7601-AF events that are not RPT dependent. Enabled events in this register will set or clear the ESB bit of the status byte register.

Table 23. Standard event register

PON	URQ	CMD	EXE	DDE	QYE	RQC	OPC
(128)	(64)	(32)	(16)	(8)	(4)	(2)	(1)

원문: Fluke Calibration PG7601 메뉴얼(영문) · 제조사 원문 자료입니다. 사양은 제조사 사정에 따라 변경될 수 있습니다.

we measure, we calibrate, we validate.
㈜테솔 · www.tessol.com TS-TL-FLK-094 164 / 234
KOLAS 국제공인교정기관 · ISO/IEC 17025

TS-TL-FLK-094

This register can be read using the "*ESR?" query. Each of these status bits can set the ESB bit of the status byte register, causing a SRQ to occur IF the ESB bit is enabled to do so. The Standard Event Status Enable Register ("*ESE" program message) determines which of these flags are able to assert the ESB bit. The description of these bits are given as:

- **PON**: Power On (Bit 7)

  Indicates that the PG7601-AF power has been cycled since the last time this bit was read or cleared.

- **URQ**: User Request (Bit 6)

  Indicates that PG7601-AF was set to local operation manually from the front panel by the user (pressing the **[ESCAPE]** key).

- **CMD**: Command Error (Bit 5)

  Indicates that a remote command error has occurred. A command error is typically a syntax error in the use of a correct program message.

- **EXE**: Execution Error (Bit 4)

  Indicates if a remote program message cannot be processed due to device related condition.

- **DDE**: Device Dependent Error (Bit 3)

  Indicates that an internal error has occurred in PG7601-AF such as a transducer time-out.

- **QYE**: Query Error (Bit 2)

  Indicates that an error has occurred in the protocol for program message communications. This is typically caused by a program message being sent to PG7601-AF without reading a waiting reply.

- **RQC**: Request Control (Bit 1)

  This bit is not supported as PG7601-AF cannot become the active controller in charge.

- **OPC**: Operation Complete (Bit 0)

  Indicates that PG7601-AF has completed all requested functions.

 © 2008 DH Instruments, a Fluke Company

원문: Fluke Calibration PG7601 메뉴얼(영문) · 제조사 원문 자료입니다. 사양은 제조사 사정에 따라 변경될 수 있습니다.

NOTES

원문: Fluke Calibration PG7601 메뉴얼(영문) · 제조사 원문 자료입니다. 사양은 제조사 사정에 따라 변경될 수 있습니다.

6. General Maintenance and Adjustments

6.1 OVERVIEW

The PG7601-SYS-AF system is designed for low maintenance operation. However, certain regular maintenance functions are required to assure reliability and the best performance over time. These are summarized in Table 24, including cross-references to sections of this manual detailing each procedure.

This section does not include metrological maintenance and recalibration. See Sections 7.2 and 7.3 for information on these topics.

Table 24. Mechanical maintenance procedures

COMPONENT	PROCEDURE	DESCRIPTION	FREQUENCY	SEE SECTION
PC-7100/7600 piston-cylinder modules	Clean piston-cylinder	Disassemble the module and clean the piston-cylinder. Reassemble the module.	When pressure set by PG7601-AF is noisy; pressure controller is unable to float piston consistently; piston rotation time is lower than usual and/or deceleration is faster than usual.	6.3.2
PC-7100/7600 piston-cylinder modules	Lubricate module parts	Apply lubricant to O-rings and certain module contact parts.	When reassembling module after cleaning piston-cylinder or 6 months.	6.3.3
PG7601-AF platform	Adjust piston position indication system	Run a routine from the PG Terminal with piston in fully down and up positions.	6 months or if pressure control to float PG7601-AF piston does not operate correctly; if pressure is not stable when piston is floating.	6.4.1
PG7601-AF platform	Replace piston rotation drive belts	Disassemble PG7601-AF rotation plate, replace belts and reassemble.	When piston rotation system no longer operates reliably.	6.4.2
PPC3-7M-AF pressure controller	Validate/adjust internal pressure sensor	Run PPC3-7M-AF AutoZero. If necessary, set pressures with PG7601-AF system and adjust PPC3-7M-AF calibration coefficients.	6 months or if pressure control becomes too slow or unreliable.	6.5
D16B vacuum pump	Check oil level. Top off oil.	View oil sight glass on vacuum pump and add oil if necessary.	1 month or less frequently, depending on usage.	6.6.1
D16B vacuum pump	Change oil.	Drain pump oil and replace with fresh oil.	After first 100 hours of operation, then 1 year.	6.6.2

⚠ *PG7601-SYS-AF is a sophisticated automated pressure standard with advanced on-board features and functions. Before assuming that unexpected behavior is caused by a system defect or breakdown, use this manual and other training facilities to become thoroughly familiar with PG7601-SYS-AF operation. For rapid assistance in specific situations, consult Section 1, Troubleshooting.*

⚠ *PG7601-SYS-AF is covered by a limited 1 year warranty (see Section 9.4). Unauthorized service or repair during the warranty period is undertaken at the owner's risk and may cause damage that is NOT covered under product warranty and/or may void the product warranty. Calibration, maintenance and repair services for PG7601-AF are available from DHI Authorized Service Providers.*

© 2008 DH Instruments, a Fluke Company

원문: Fluke Calibration PG7601 메뉴얼(영문) · 제조사 원문 자료입니다. 사양은 제조사 사정에 따라 변경될 수 있습니다.

TESSOL Technical Library
TS-TL-FLK-094
we measure, we calibrate, we validate.
㈜테솔 · www.tessol.com TS-TL-FLK-094 167 / 234
KOLAS 국제공인교정기관 · ISO/IEC 17025

6.2 ILLUSTRATED PARTS BREAKDOWN

Table 25. Top Level Illustrated Parts Breakdown (see Figure 23)

# REQUIRED	DESCRIPTION	PART NO.
1	1. DUT quick connector on stand	401459
1	2. Tube, DUT connector to tee	402363
1	3. Trim mass set	402403
1	4. Vacuum vent valve	401050
1	5. Tee	102939
1	6. Platform shutoff valve assembly	402361
1	7. Tube, PPC3 to tee	402362
1	8. RS232 cable, PPC3 to PG7601	100847
1	9. PPC3-7M-AF pressure controller	402014
1	10. PG Terminal to platform cable	102227
1	11. PG Terminal	401284
1	12. D16B reference vacuum pump	102408
1	13. Vacuum pump smoke eliminator	101932
1	14. PG7601-AF platform	402367
1	15. Vacuum shutoff valve	102763
1	16. KF25 hose	103737
1	17. KF25 elbow	103736
1	18. Mass set	402259
1	19. Fractional mass tray	123051
1	20. Bell jar	122106
1	21. Bell jar seal	101546

© 2008 DH Instruments, a Fluke Company

원문: Fluke Calibration PG7601 메뉴얼(영문) · 제조사 원문 자료입니다. 사양은 제조사 사정에 따라 변경될 수 있습니다.

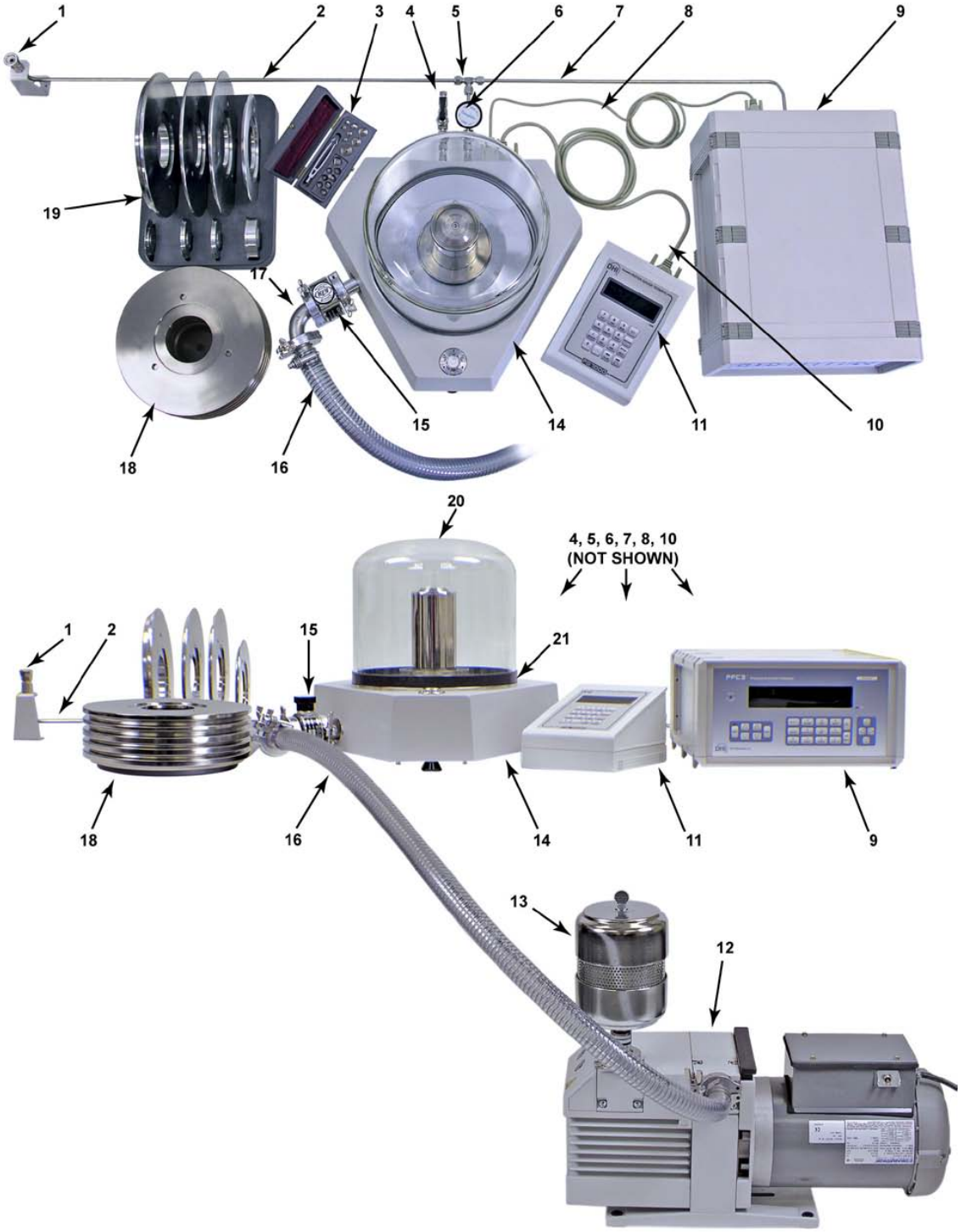

Figure 23. Top Level Illustrated Parts Breakdown for PG7601-SYS-AF

© 2008 DH Instruments, a Fluke Company

원문: Fluke Calibration PG7601 메뉴얼(영문) · 제조사 원문 자료입니다. 사양은 제조사 사정에 따라 변경될 수 있습니다.

Table 26. PG7601 Illustrated Parts Breakdown for Mass Set, Cases, and Covers (see Figure 24)

# REQUIRED	DESCRIPTION	PART NO.
1	MS-7001-35-AF	402259
1	4.5 kg make up mass disk	121919
5	5 kg mass disk	121907
2	2 kg mass disk	121922
1	1 kg mass disc	121936
1	0.5 kg mass puck	123500
2	0.2 kg mass puck	123498
1	0.1 kg mass puck	123496
1	0.3 kg mass loading bell	402135
1	Trim mass set (50 to 0.01 g) in case	402403
1	Fractional mass tray	123051
1	Main mass spindle	123536
1	Main mass molded transit case with inserts	123057
1	Fractional mass molded transit case with inserts	122577
1	Fractional mass tray dust cover	102814
1	Main mass stack dust cover	102847

Figure 24. PG7601 Illustrated Parts Breakdown for Mass Sets, Cases, and Covers

원문: Fluke Calibration PG7601 메뉴얼(영문) · 제조사 원문 자료입니다. 사양은 제조사 사정에 따라 변경될 수 있습니다.

Table 27. PG7601 Illustrated Parts Breakdown for Piston Cylinders (see Figure 25)

# REQUIRED	DESCRIPTION	PART NO.
1	**PC-7100/7600-10-L piston-cylinder module**	**402184**
1	screw, M6	121130
1	piston cap	122864-22
1	adjustment mass	121203
1	retaining nut	122371
1	piston/cylinder assembly	402182
1	piston/cylinder assembly	402182
1	o-ring, 2-130	102380
1	sealing ring	122370
1	o-ring, 2-222	101918
1	retaining sleeve	122369
1	**PC-7100/7600-50 piston-cylinder module**	**401563**
1	**PC-7100/7600-200 piston-cylinder module**	**401564**
2	screw, M6	121130
1	piston cap	122864-05
1	piston cap	122864-07
2	adjustment mass	121203
2	retaining nut	122373
4	screw, M4	121131
1	piston/cylinder assembly	401331
1	piston/cylinder assembly	401331
1	piston/cylinder assembly	401175
1	piston/cylinder assembly	401175
2	cylinder sleeve	122373
2	o-ring, 2-120	101921
2	lower sleeve	122372
2	o-ring, 2-130	102380

Table 28. PG7601 Illustrated Parts Breakdown for Piston Cylinder Cases (see Figure 26)

# REQUIRED	DESCRIPTION	PART NO.
3	Piston-Cylinder bullet case	401642
3	o-ring, 2-146	102139
3	o-ring, 2-008	101206
3	vent screw, M4	100557-Z
1	piston-cylinder case	402368

 © 2008 DH Instruments, a Fluke Company

원문: Fluke Calibration PG7601 메뉴얼(영문) · 제조사 원문 자료입니다. 사양은 제조사 사정에 따라 변경될 수 있습니다.

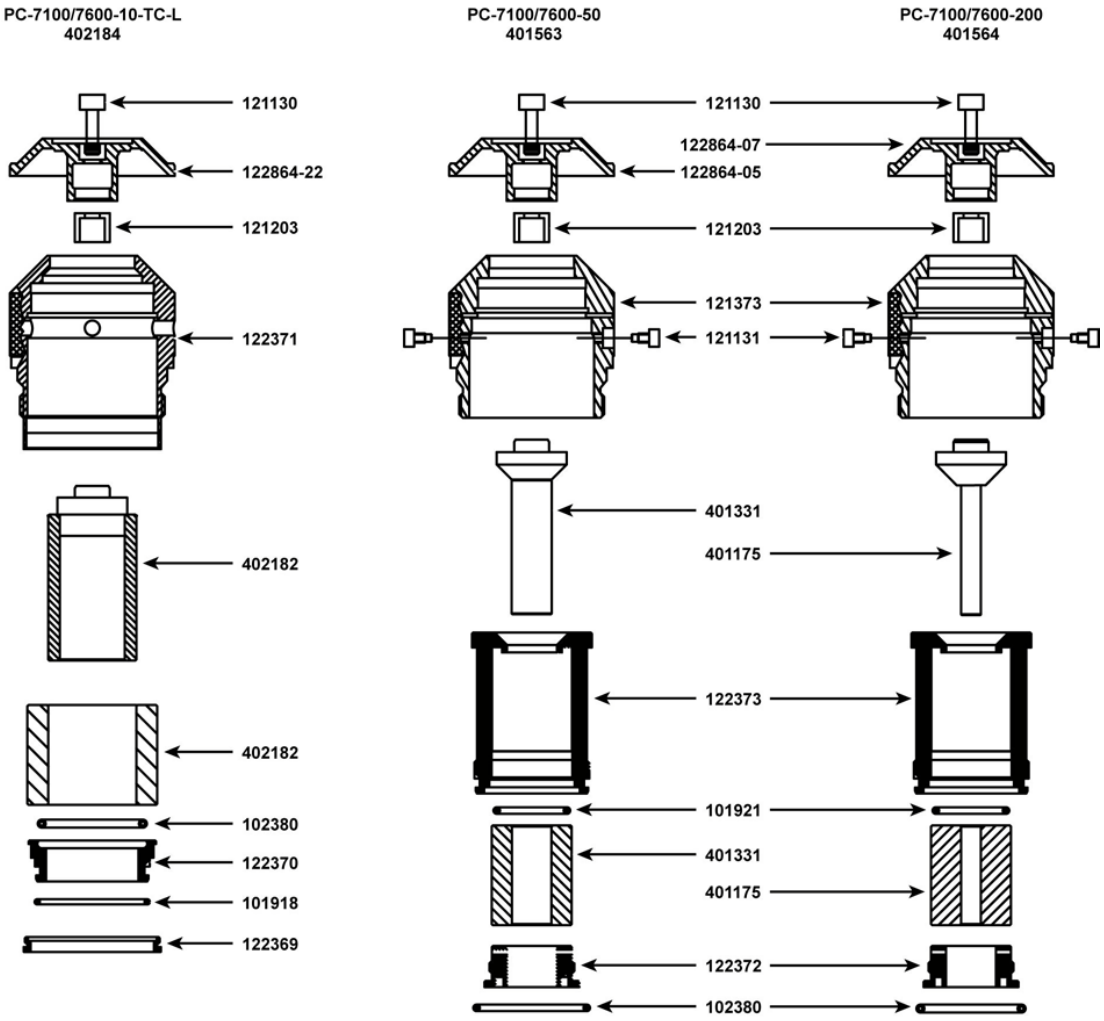

Figure 25. PG7601 Illustrated Parts Breakdown for Piston Cylinders

Figure 26. PG7601 Illustrated Parts Breakdown for Piston Cylinder Cases

원문: Fluke Calibration PG7601 메뉴얼(영문) · 제조사 원문 자료입니다. 사양은 제조사 사정에 따라 변경될 수 있습니다.

Table 29. PG7601 Illustrated Parts Breakdown for PG Main Board (see Figure 27)

# REQUIRED	DESCRIPTION	PART NO.
2	COM2,3 assembly	400959
1	PG Terminal cable assembly	400960
2	Cover, adjustment wheel	122560
4	screw, M3	101005
4	washer, M3	100739-Z
4	lock washer, M3	102464-Z
1	PCB, humidity sensor	401099
1	PCB, vacuum sensor	400954
1	PCB, barometer	400461
6	Screw, M4	101021-Z
6	lock washer, M4	102668-Z
1	PG Base plate	124422
1	Fan	102337
1	PCB, PG main board	402278
9	Screw, M3x6	100984-Z
9	Lockwasher	102464-Z
1	IEEE assembly	400957
1	Ambient PRT assembly	402246
1	PRT sleeve	122005
1	PRT sleeve bracket	124458
1	COM1 assembly	400958
1	Humidy sensor assembly	401100

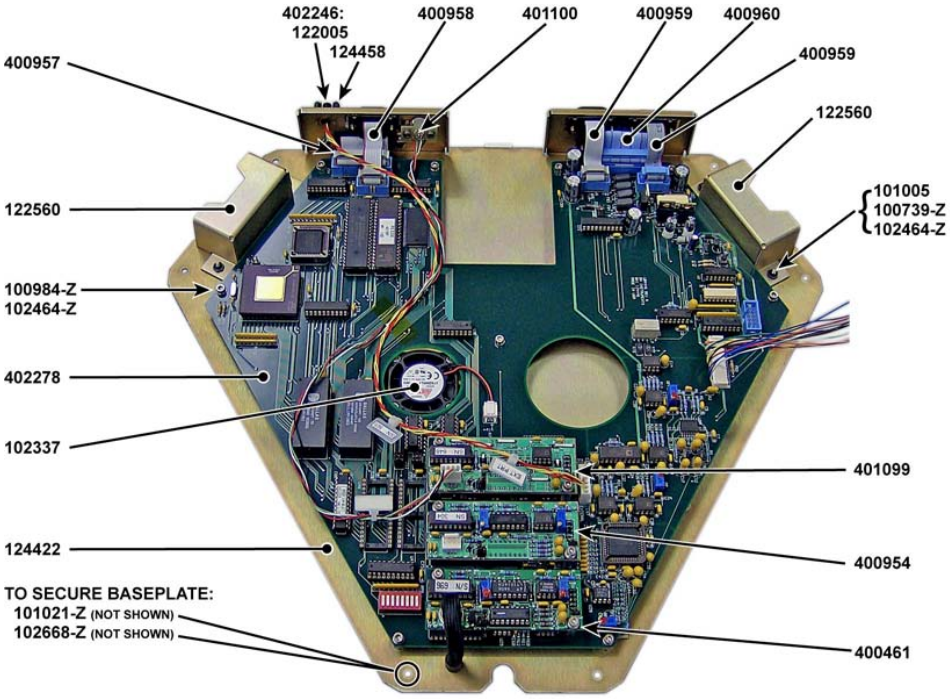

Figure 27. PG7601 Illustrated Parts Breakdown for PG Main Board

© 2008 DH Instruments, a Fluke Company

원문: Fluke Calibration PG7601 메뉴얼(영문) · 제조사 원문 자료입니다. 사양은 제조사 사정에 따라 변경될 수 있습니다.

Table 30. PG7601 Illustrated Parts Breakdown for PG Base Underside (see Figure 28)

# REQUIRED	DESCRIPTION	PART NO.
1	Front foot assembly	401015
1	PRT assembly	401055
1	Wire harness, vac sensor	401054
1	Adaptor	101271
1	Engagement motor assembly	402333
3	screw, M6x16	101029
3	lockwasher	102088-Z
3	screw, M4x16	101017-Z
3	mounting clip	121395
1	Vacuum gauge assembly	400915
1	Cable pass thru assembly	402335
1	tube, test pressure	124537
2	jam nut	101389
2	splitlock washer	102908-Z
2	Bulkhead assembly	400519
1	Tube, vac vent	124538
4	screw, M4x16	101017-Z
1	pass thru plate	121479
3	mounting clip	121395
1	Vacuum tube assembly	121503
2	Vacuum tube clamp	122601
1	Clamp, KF25	102121
1	Blank off cap, KF25	103239
1	Drive motor assembly	402334
2	screw, M4x20	102588
2	washer	100918-Z
2	lockwasher	102668-Z
2	nut	100972-Z

© 2008 DH Instruments, a Fluke Company

원문: Fluke Calibration PG7601 메뉴얼(영문) · 제조사 원문 자료입니다. 사양은 제조사 사정에 따라 변경될 수 있습니다.

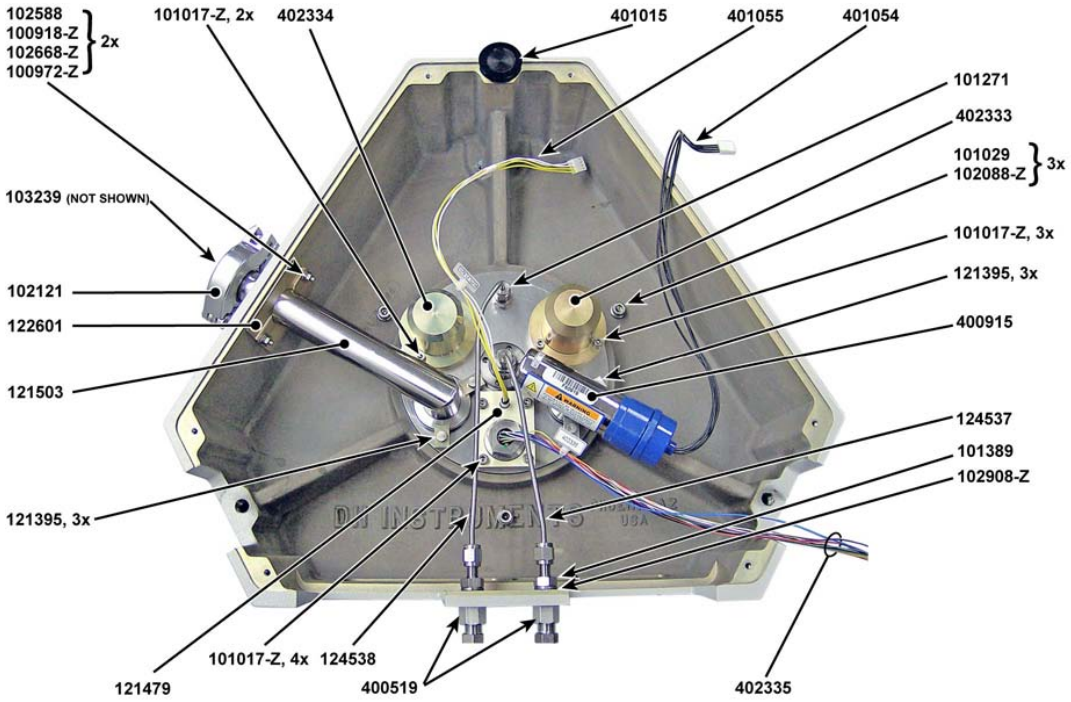

Figure 28. PG7601 Illustrated Parts Breakdown for PG Base Underside

© 2008 DH Instruments, a Fluke Company

원문: Fluke Calibration PG7601 메뉴얼(영문) · 제조사 원문 자료입니다. 사양은 제조사 사정에 따라 변경될 수 있습니다.

Table 31. PG7601 Illustrated Parts Breakdown for PG Base Outside (see Figure 29)

# REQUIRED	DESCRIPTION	PART NO.
1	Plug, mounting post	122112
1	Bubble level	401674
3	screw, M3x8	101010-Z
1	Mounting post assembly	402392
2	Piston position sensor assm.	400594
1	vacuum plate	124351
1	Vacuum tube assembly	121503
1	PG base	122202
2	rear adjustment foot	401016
1	Ambient PRT assembly	402246
1	IEEE assembly	400957
1	COM1 assembly	400958
2	screw lock	102073
1	Humidy sensor assembly	401100
2	gland, DH200	100272
2	plug, DH200	101279
2	COM2,3 assembly	400959
1	PG Terminal cable assembly	400960
8	Jacksocket	100495
1	Vent plate	122156
3	screw, M3x10	100997-Z
6	screw, M4x6	100557-Z
1	Drive pully plate assembly	400573
1	Rotation sensor assm.	400595

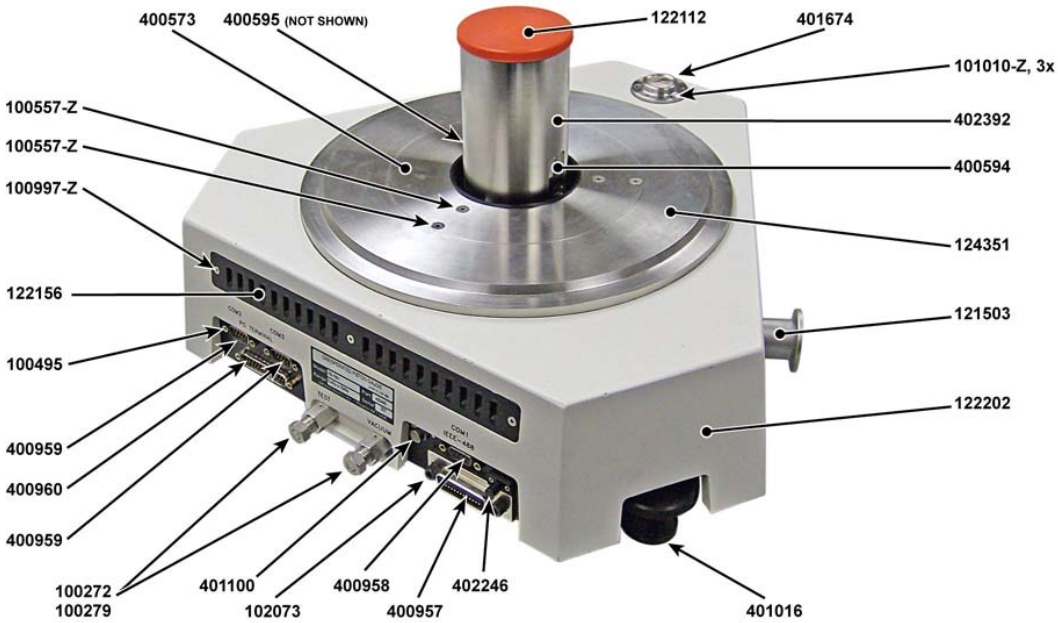

Figure 29. PG7601 Illustrated Parts Breakdown for PG Base Outside

원문: Fluke Calibration PG7601 메뉴얼(영문) · 제조사 원문 자료입니다. 사양은 제조사 사정에 따라 변경될 수 있습니다.

Table 32. PG7601 Illustrated Parts Breakdown for PG Terminal Outside (see Figure 30)

# REQUIRED	DESCRIPTION	PART NO.
1	Enclosure	122490
1	Display assembly, 2x20	102066
1	Keypad overlay	123066
1	Fan guard	102338
4	Screw, M3x20	100985
2	Fuse, 250V, 1A, slo-blo	100589
1	Power entry module	102417
1	PG Terminal cable assembly	400960
2	Jacksocket	100482
1	Rear panel	122489-01

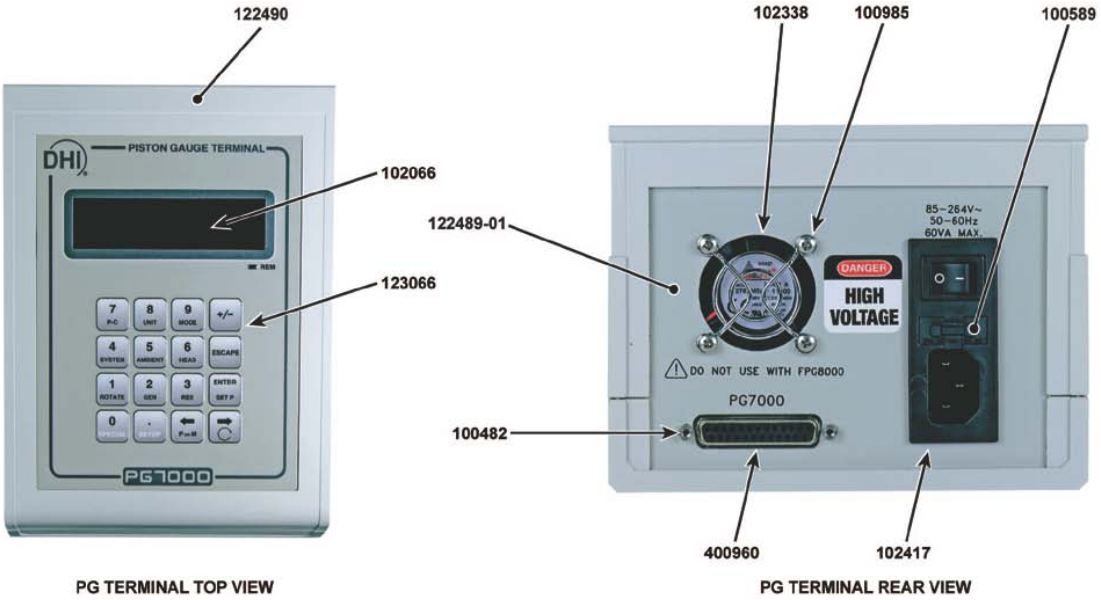

Figure 30. PG7601 Illustrated Parts Breakdown for PG Terminal Outside

© 2008 DH Instruments, a Fluke Company

원문: Fluke Calibration PG7601 메뉴얼(영문) · 제조사 원문 자료입니다. 사양은 제조사 사정에 따라 변경될 수 있습니다.

Table 33. PG7601 Illustrated Parts Breakdown for PG Terminal Inside (see Figure 31)

# REQUIRED	DESCRIPTION	PART NO.
1	Power entry module	102417
1	Cable assembly, ground	402319
2	Nut, M3	100970-Z
4	Lock washer, M3	100969-Z
1	Fan	102337
4	Nut, M3	100970-Z
1	Cable assembly for display (not shown)	400945
4	Screw, M3x8	101010-Z
4	Washer, M3	100739-Z
4	Lock washer, M3	102464-Z
1	Power Supply, 24V	100820
1	Cable assembly, AC in	402297
1	PCB assembly	401285-01
1	Cable assembly, power	402337
1	Ferrite sleeve	102400

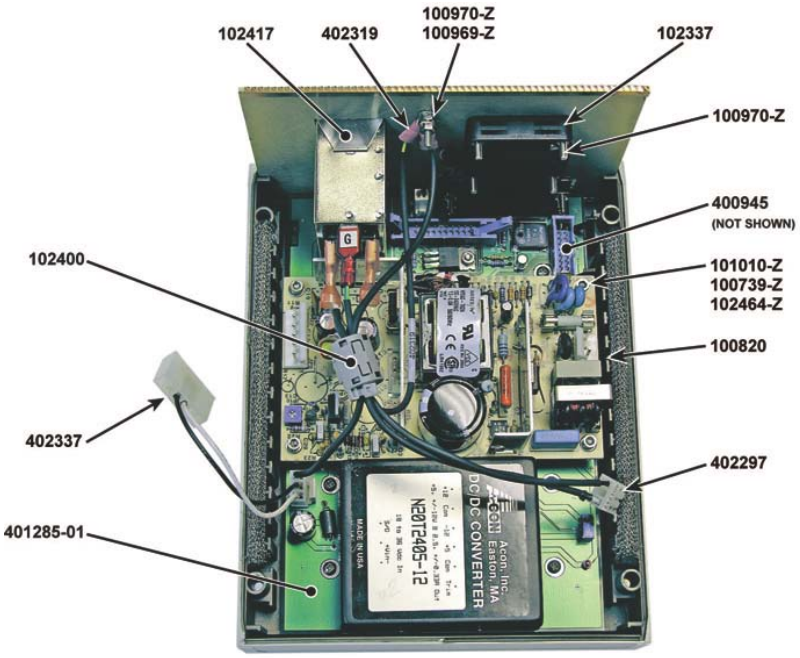

PG TERMINAL INTERNAL VIEW

Figure 31. PG7601 Illustrated Parts Breakdown for PG Terminal Inside

원문: Fluke Calibration PG7601 메뉴얼(영문) · 제조사 원문 자료입니다. 사양은 제조사 사정에 따라 변경될 수 있습니다.

Table 34. PG7601 Illustrated Parts Breakdown for PPC3 Outside (see Figure 32)

# REQUIRED	DESCRIPTION	PART NO.
1	Top / Bottom panels	100768
1	Display	103122
1	Side panels	123644
1	keypad panel membrane	123522
1	COM2 D sub	102443
4	Jacksocket	100495
1	IEEE connector	102076
2	Lockscrew	102073
1	COM1 D sub	102442
4	Screw, M3x16	102599
1	Fan guard	102338
1	Fan	102337
1	Valve driver connector	102493
2	Fuse, 250V, 1A, slo-blo	100589
1	Power entry module	102417
1	Remote enter connector	103126
1	Manifold assembly	401909
1	Rear panel	123506
1	Bulkhead fitting, EXHAUST	101527
1	Bulkhead fitting, SUPPLY	102174

 © 2008 DH Instruments, a Fluke Company

원문: Fluke Calibration PG7601 메뉴얼(영문) · 제조사 원문 자료입니다. 사양은 제조사 사정에 따라 변경될 수 있습니다.

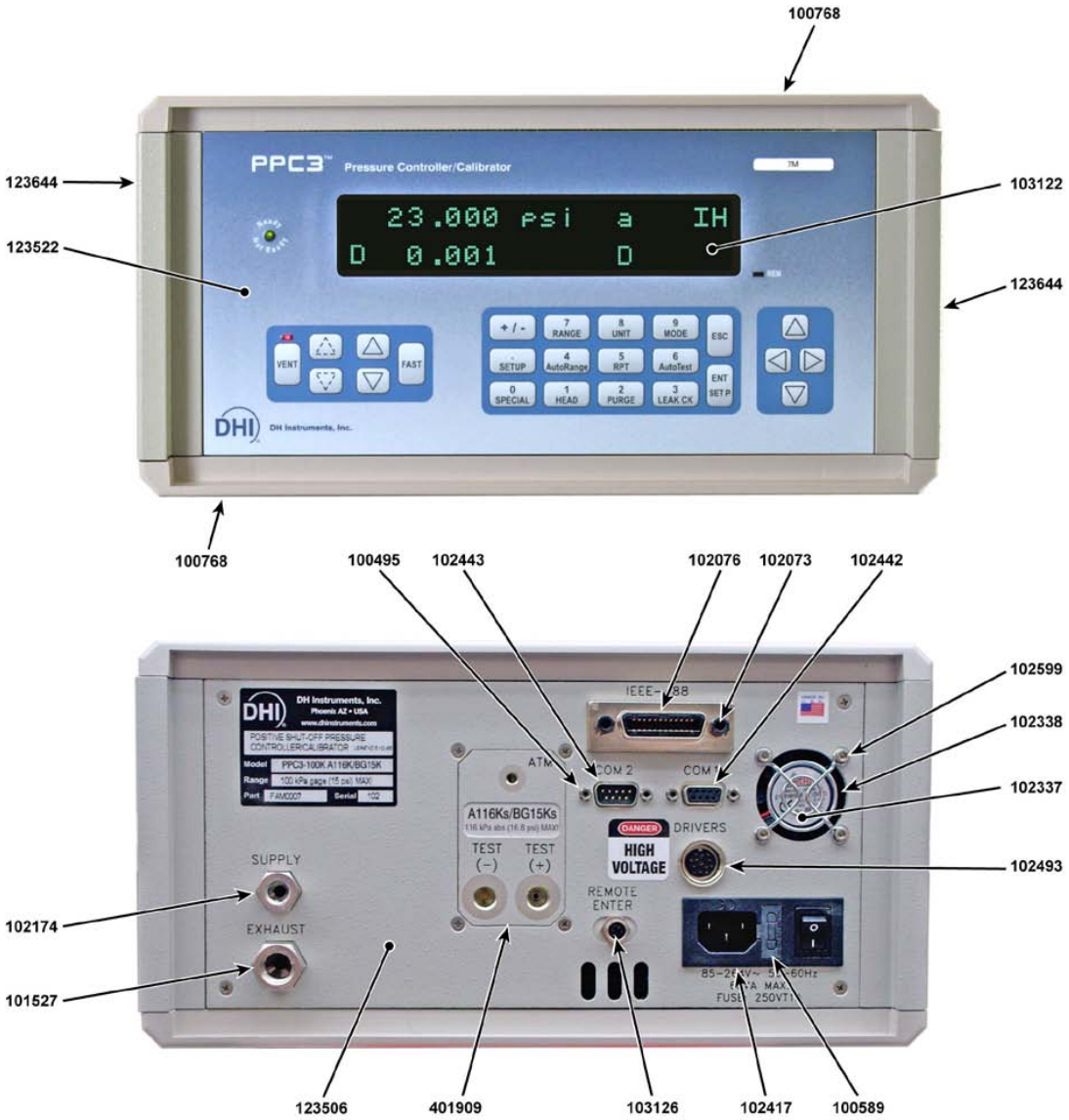

Figure 32. PG7601 Illustrated Parts Breakdown for PPC3 Outside

원문: Fluke Calibration PG7601 메뉴얼(영문) · 제조사 원문 자료입니다. 사양은 제조사 사정에 따라 변경될 수 있습니다.

Table 35. PG7601 Illustrated Parts Breakdown for PPC3 Pneumatic Module (see Figure 33)

# REQUIRED	DESCRIPTION	PART NO.
1	Bulkhead fitting	102174
1	Reducing union	101983
2	Filter, 2 micron	100355
8	Tubing, SS	100864-Z
3	Adaptor, BR	102189
1	Inlet flow controller	100899
2	Adaptor, BR	101406
2	Restriction	401360-01
4	Adaptor, BR	100931
18	Union, BR	122511
18	O-ring, 5-193	102394
4	Valves 1, 3, 5, 10	103728
2	Valves 2, 4	103731
2	Union, BR	102273
1	Restriction	401360-03
2	Restriction	401360-02
2	Tee, BR	102196
6	Tubing, SS	101404-Z
1	Valve 6	103729
1	Adaptor, BR	101987
1	Cross, BR	100314
2	Adaptor, BR	100318
1	Accumulator	100817
1	Union, SS	102274
1	Elbow, SS	101490
1	Outlet flow controller	100898
2	Insert, BR	102981
1	Tubing, PFA	101450-Z
1	Tubing, Vinyl	102605-Z
1	Vacuum sensor assembly	402137
1	Tee, BR	101487
1	Union, BR	101985
1	Bulkhead fitting	101527

 © 2008 DH Instruments, a Fluke Company

원문: Fluke Calibration PG7601 메뉴얼(영문) · 제조사 원문 자료입니다. 사양은 제조사 사정에 따라 변경될 수 있습니다.

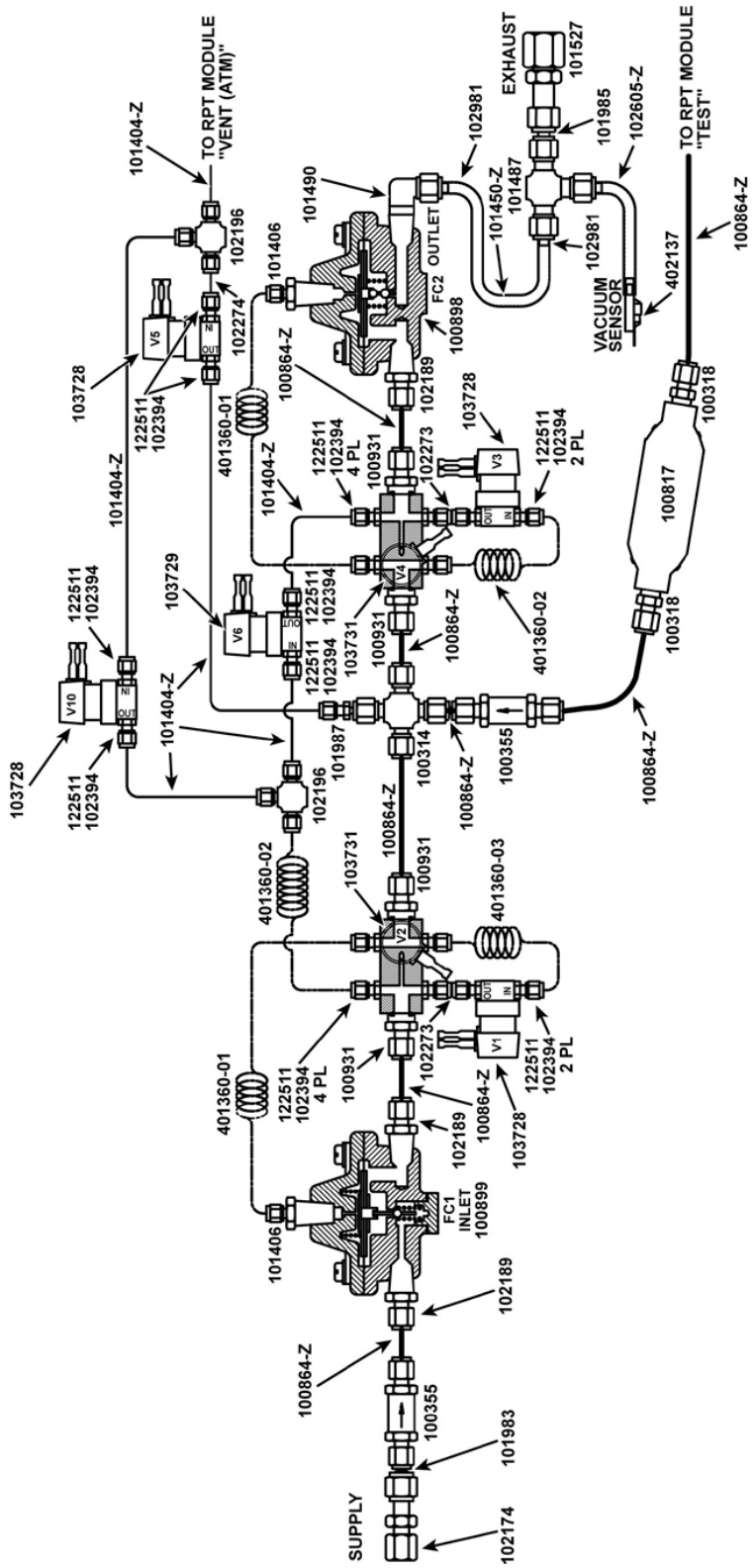

Figure 33. PG7601 Illustrated Parts Breakdown for PPC3 Pneumatic Module

원문: Fluke Calibration PG7601 메뉴얼(영문) · 제조사 원문 자료입니다. 사양은 제조사 사정에 따라 변경될 수 있습니다.

Table 36. PG7601 Illustrated Parts Breakdown for PPC3 Inside (see Figure 34)

# REQUIRED	DESCRIPTION	PART NO.
1	Inlet flow controller	100899
1	Bracket, pneumatic module	123595-01
1	Outlet flow controller	100898
1	Vacuum sensor	402137
1	Barometer assembly	401898-06
2	Cable assembly	401901
1	PFA tube	101450-Z
1	Manifold block	123519
1	Power entry module	102417
1	Electronic chassis	123509
1	Mini micro board	401365
10	Screw, M3x8	101010-Z
10	Lockwasher, M3	102464-Z
1	PPC3 driver board	401747-01
1	Keypad panel membrane	123522
1	Display	103527

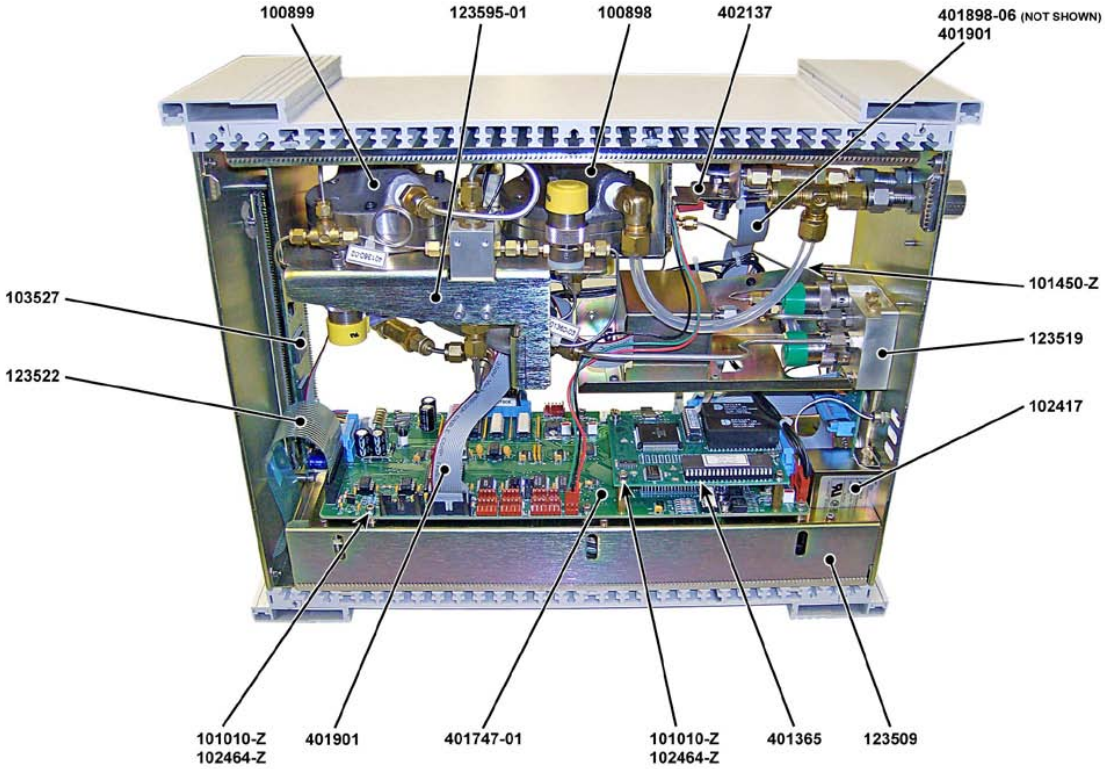

Figure 34. PG7601 Illustrated Parts Breakdown for PPC3 Inside

© 2008 DH Instruments, a Fluke Company

원문: Fluke Calibration PG7601 메뉴얼(영문) · 제조사 원문 자료입니다. 사양은 제조사 사정에 따라 변경될 수 있습니다.

Table 37. PG7601 Illustrated Parts Breakdown for PPC3 Manifold detail (see Figure 35)

# REQUIRED	DESCRIPTION	PART NO.
1	Tubing, SS	101404-Z
1	Union, BR	122511
1	O-ring, 5-193	102394
1	Solenoid valve	103732
7	Screw, M3x6	103107-Z
7	Lockwasher, M3	102464-Z
1	Manifold block	123519
2	Plug, 10-32	102280
2	Adaptor, SS	123330
1	Bracket, transducer module	123583
1	Solenoid valve	103730
2	Tubing, SS	100864-Z
1	Utility sensor assembly	401898-02

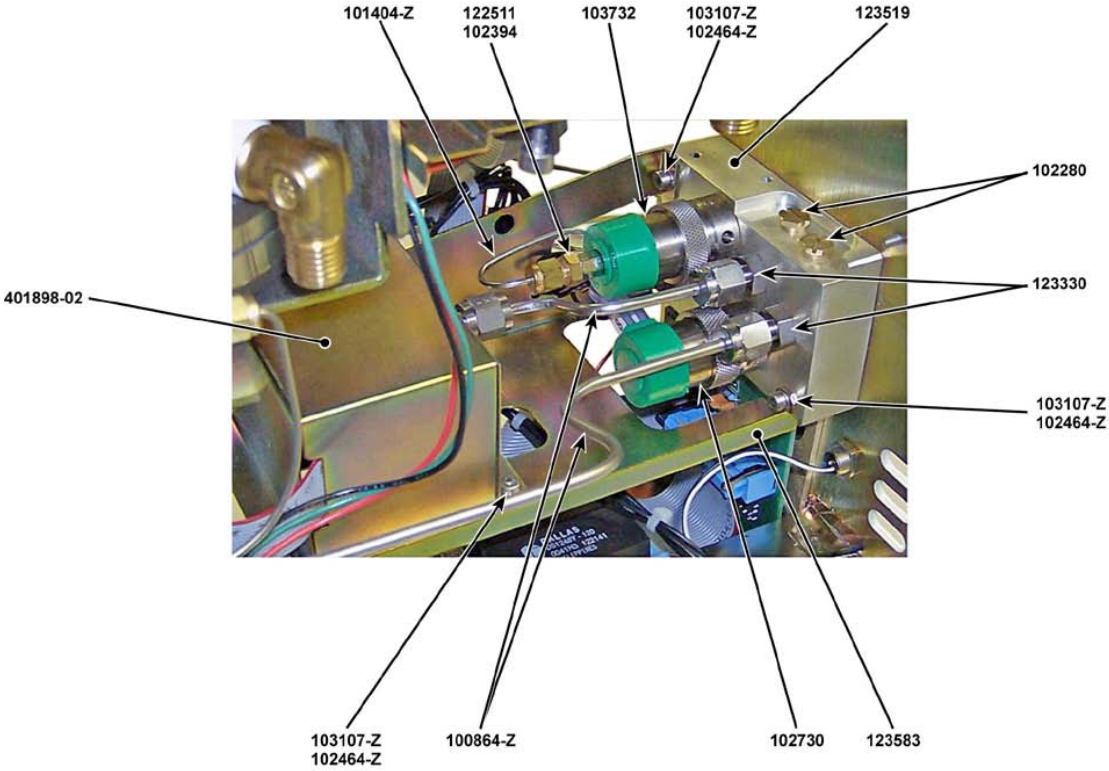

Figure 35. PG7601 Illustrated Parts Breakdown for PPC3 Manifold detail

원문: Fluke Calibration PG7601 메뉴얼(영문) · 제조사 원문 자료입니다. 사양은 제조사 사정에 따라 변경될 수 있습니다.

Table 38. PG7601 Illustrated Parts Breakdown for PK-7601-P-AF (see Figure 36)

# REQUIRED	DESCRIPTION	PART NO.
1	**Interconnection kit**	**402364**
1	Valve assembly	402361
1	QC on stand	401459
1	QC stem, AN4 M	102115
1	QC stem, 1/4 in. Swage	101977
1	QC stem, 1/4 in. NPT F	102117
1	QC stem, 1/8 in. NPT F	102116
1	Tee	102939
1	Adaptor	102033
1	Custom SS tube, 76 cm	402362
1	Custom SS tube, 53 cm	402363

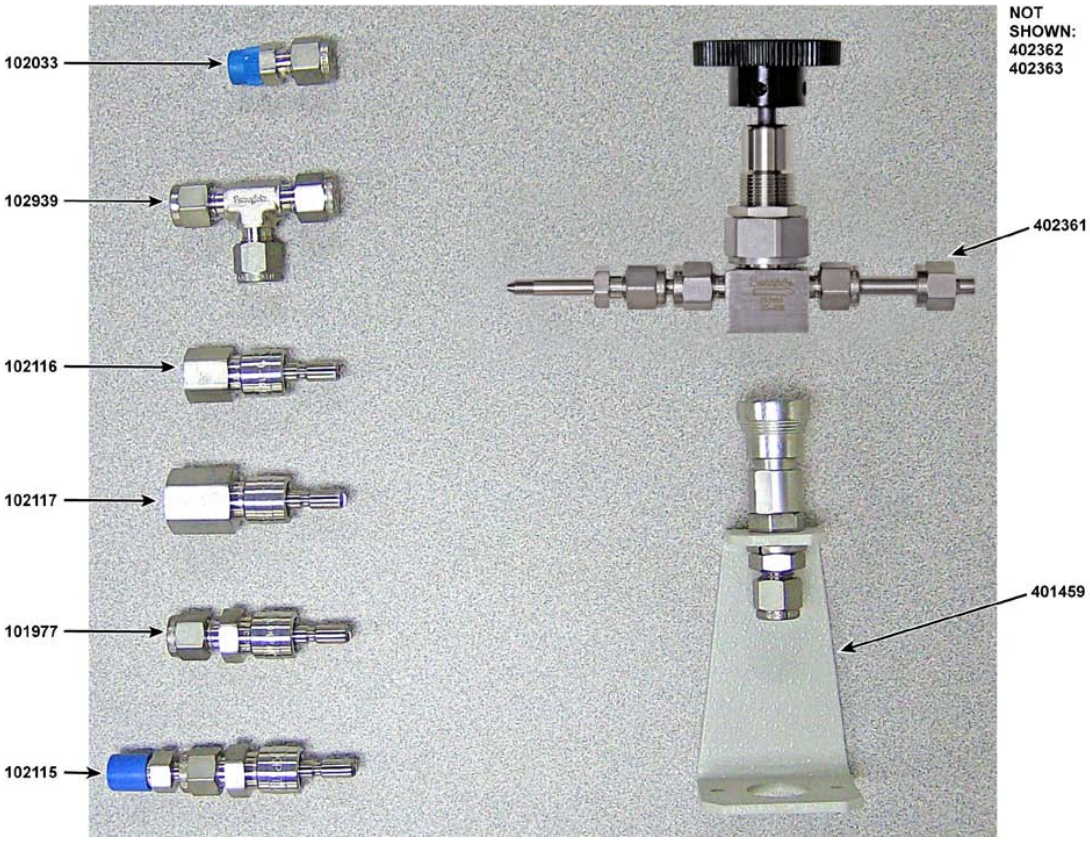

Figure 36. PG7601 Illustrated Parts Breakdown for PK-7601-P-AF

© 2008 DH Instruments, a Fluke Company

원문: Fluke Calibration PG7601 메뉴얼(영문) · 제조사 원문 자료입니다. 사양은 제조사 사정에 따라 변경될 수 있습니다.

Table 39. PG7601 Illustrated Parts Breakdown for Accessories Kit (see Figure 36)

# REQUIRED	DESCRIPTION	PART NO.
1	**Accessories kit**	**402366**
1	Piston insertion tool	402371
1	Spanner wrench	122568
1	Rubber feet, PPC3	400203
2	O-ring, 2-242	101976
1	Krytox®	102496
1	Operation and Maintenance manual	550152
1	Dust cover	102132
1	Support disk	402275
1	Gloves	101398
2	Power cord	100770
1	Valve assembly, vacuum relief	401050
1	Serial cable, 9 pin D sub	100847
1	Null modem cable, 9 pin D sub	402114
1	Allen wrench, 2.5 mm	102257
1	Allen wrench, 3 mm	102168
1	Allen wrench, 5 mm	102262
1	Plug / PRT support	402389

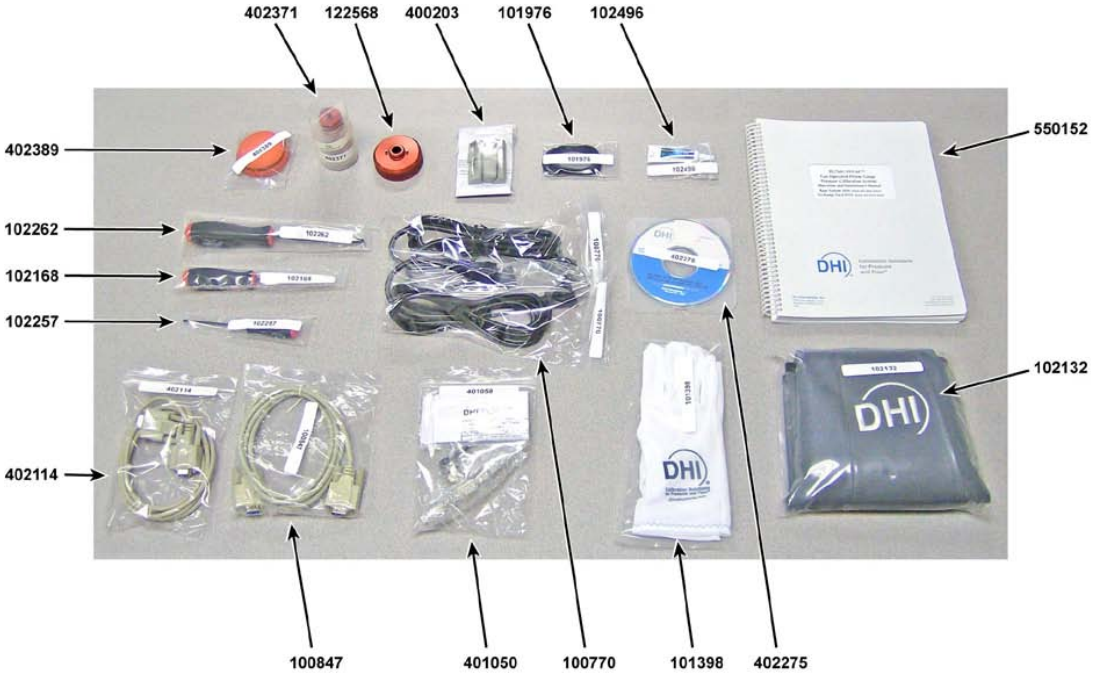

Figure 37. PG7601 Illustrated Parts Breakdown for Accessories Kit

원문: Fluke Calibration PG7601 메뉴얼(영문) · 제조사 원문 자료입니다. 사양은 제조사 사정에 따라 변경될 수 있습니다.

6.3 PISTON-CYLINDER MODULES

6.3.1 DISASSEMBLY AND REASSEMBLY

The PG7601-AF piston-cylinder module design affords maximum protection to the piston-cylinder element assuring that it is protected during routine piston-cylinder handling. Disassembly of the module exposes the piston-cylinder to possible damage. The main risks are damage to the critical working surfaces and chipping due to getting the piston cocked in the cylinder. Only qualified personnel equipped with the proper tools, supplies and procedures should undertake piston-cylinder disassembly and reassembly. The instructions and recommendations contained in this manual should be followed carefully throughout the operation.

Assembly and disassembly procedures are different for the PC-7100/7600-10-L piston-cylinder module and the PC-7100/7600-50 and -200 piston-cylinder modules.

See Section 6.3.1.1 for assembly and disassembly instructions for the PC-7100/7600-10-L (10 kPa/kg) piston-cylinder module.

See Section 6.3.1.3 for assembly and disassembly instructions for the PC-7100/7600-50 and -200 (50 kPa/kg, 200 kPa/kg) piston-cylinder modules.

The piston assembly (piston + piston head + adjusting mass + piston cap + piston cap retaining screw) is part of the PG7601-AF mass load. Its mass has been measured and is reported in the calibration report. Use caution when handling these parts. Out of tolerance pressure definitions could result from changing their mass by swapping parts, contaminating them or leaving parts out in reassembly.

© 2008 DH Instruments, a Fluke Company

원문: Fluke Calibration PG7601 메뉴얼(영문) · 제조사 원문 자료입니다. 사양은 제조사 사정에 따라 변경될 수 있습니다.

we measure, we calibrate, we validate.
KOLAS 국제공인교정기관 · ISO/IEC 17025

6.3.1.1 PC-7100/7600-10-L (10 KPA/KG) DISASSEMBLY AND REASSEMBLY

Numerical references in the procedure below refer to Figure 38.

❶ Place the piston-cylinder module upside down on a clean stable surface (piston cap (2) down).

❷ Using the 10 kPa/kg side of the sleeve nut tool (see Figure 39), remove the sleeve nut (9). The sleeve nut tool is a spanner that fits into the two holes on the sleeve nut.

The sleeve nut for the 10 kPa/kg module has a left hand thread so it is loosened by turning clockwise.

Step 1 and 2

❸ Remove the O-ring assembly (8). Then, being sure to support the cylinder (7) so it doesn't fall out, turn the remaining assembly over so that the piston cap (2) is up.

Step 3

❹ While firmly holding down the cap (2), use a 5 mm Allen tool (supplied with PG7601-AF accessories), to loosen the socket head cap retaining screw (1). The cap retaining screw will not fully disengage from the piston cap due to the adjustment mass (3). Gently remove the cap and screw from the assembly.

In reassembly, when installing the piston cap, remember to reinstall the adjustment mass (3).

Step 4

원문: Fluke Calibration PG7601 메뉴얼(영문) · 제조사 원문 자료입니다. 사양은 제조사 사정에 따라 변경될 수 있습니다.

we measure, we calibrate, we validate.
KOLAS 국제공인교정기관 · ISO/IEC 17025

❺ Remove the main module housing (4) by sliding it upward leaving behind the piston-cylinder assembly.

⚠ *Do not touch the polished surfaces of the piston or the cylinder at any time.*

Step 5

❻ Reinstall the piston cap (2) directly onto the piston head (5).

Step 6

© 2008 DH Instruments, a Fluke Company

원문: Fluke Calibration PG7601 메뉴얼(영문) · 제조사 원문 자료입니다. 사양은 제조사 사정에 따라 변경될 수 있습니다.

❼ Place the 10 kPa/kg piston insertion tool (see Section 6.3.1.2) on the work surface with the large diameter down.

Do not touch the white plastic alignment ring of the piston insertion tool. The ring will come in contact with the inside of the cylinder and could cause contamination.

In reassembly, see Section 6.3.1.2 for instructions on using the insertion tool to put the cylinder back into the piston.

❽ Holding the cylinder (7) to prevent it from falling off, place the piston-cylinder assembly onto the tool sliding the hollowed end of the piston (6) onto the tool shaft. Carefully allow the cylinder to drop down over the white plastic centering ring. Holding the cylinder, gently remove the piston (6) from the tool. Finally, remove the tool from the cylinder.

Step 7 and 8

❾ To reassemble follow the steps above in reverse order. Follow the notes carefully and refer to the lubrication recommendations in Section 6.3.3.

The orientation of the piston in the cylinder is important. In reassembly, the end of the cylinder that is marked with the serial number should go into the main module housing first. The piston enters the end of the cylinder that is marked with the serial number. Installing the cylinder with the wrong orientation may lead to out of tolerance measurements.

© 2008 DH Instruments, a Fluke Company

원문: Fluke Calibration PG7601 메뉴얼(영문) · 제조사 원문 자료입니다. 사양은 제조사 사정에 따라 변경될 수 있습니다.

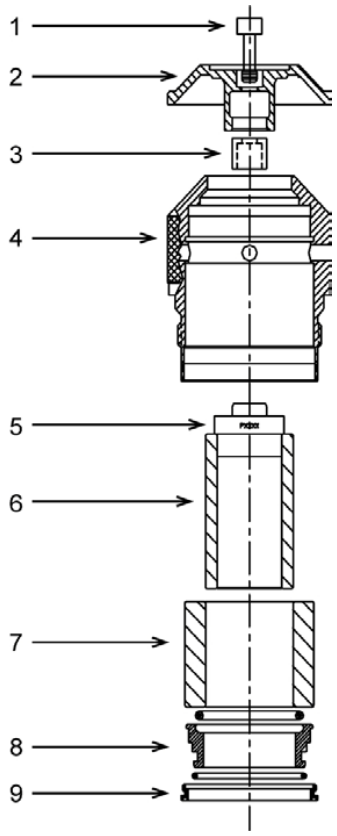

Figure 38. 10 kPa/kg piston-cylinder module (expanded view)

Figure 39. Gas piston-cylinder module sleeve nut tool

© 2008 DH Instruments, a Fluke Company

원문: Fluke Calibration PG7601 메뉴얼(영문) · 제조사 원문 자료입니다. 사양은 제조사 사정에 따라 변경될 수 있습니다.

6.3.1.2 PC-7100/7600-10-L (10 KPA/KG) PISTON INSERTION TOOL

The 10 kPa/kg piston insertion tool is used to assist in getting the piston out of and into the cylinder. Because of the large diameter of the piston and the very small gap between the piston and the cylinder, there is a risk of getting the piston stuck (cocked) in the cylinder if the two parts are not properly aligned. The tool helps insure correct alignment.

Figure 40. 10 kPa/kg piston insertion tool

Do not touch the white plastic alignment ring of the piston insertion tool. The ring will come in contact with the inside of the cylinder and could cause contamination.

Cleaning the cylinder alignment ring

When the tool is used, the white plastic cylinder alignment ring comes into contact with the inside of the cylinder. The alignment ring is delivered clean and must be kept clean to avoid transferring contamination to the cylinder and needing to reclean the cylinder. If the alignment ring is contaminated, it must be cleaned. To clean the white plastic alignment ring, proceed as follows:

❶ Moisten a section of lint free wipe with Dow Corning® OS-20 liquid. Do not touch the area of the wipe that will contact the alignment ring.

❷ Hold the moistened wipe around the alignment ring and rotate the tool in the wipe, holding the tool by the opposite end.

❸ Examine the tool closely for any debris and repeat the cleaning process if necessary.

❹ Use a **slow** steam of canned air to blow off any unseen lint or dust.

❺ After using the tool, rewrap it in plastic wrap to keep it clean and store it in its plastic container.

원문: Fluke Calibration PG7601 메뉴얼(영문) · 제조사 원문 자료입니다. 사양은 제조사 사정에 따라 변경될 수 있습니다.

Putting the cylinder onto the piston

For instructions on using the tool to remove the piston from the cylinder (Section 6.3.1.2), see the 10 kPa/kg piston-cylinder module disassembly procedure.

To install the cylinder onto the piston, proceed as follows, being sure not to touch any polished surfaces of the piston or the cylinder:

❶ Place the piston-cylinder module on a clean stable surface with the piston cap down.

❷ Insert the red end of the insertion tool into the hollow piston. **Hold the tool by the holding area; do not touch the white plastic cylinder centering ring.**

Step 1 and 2

❸ Orient the cylinder so that the end etched with the serial number is down and will meet the piston first. Gently slide the cylinder down over the white plastic cylinder centering ring, keeping it straight and aligning it with the cylinder to get it to slide down onto the cylinder.

❹ Pick up the piston-cylinder and move the cylinder on the piston, checking that they are both clean and there is good mobility of the piston in the cylinder. Then reassemble the piston-cylinder module (see Section 6.2).

The orientation of the piston in the cylinder is important. The piston enters the end of the cylinder that is marked with the serial number. Installing the cylinder with the wrong orientation may lead to out of tolerance measurements.

Step 3 and 4

6.3.1.3 PC-7100/7600-50 AND -200 (50 AND 200 KPA/KG) DISASSEMBLY AND REASSEMBLY

© 2008 DH Instruments, a Fluke Company

원문: Fluke Calibration PG7601 메뉴얼(영문) · 제조사 원문 자료입니다. 사양은 제조사 사정에 따라 변경될 수 있습니다.

we measure, we calibrate, we validate.
KOLAS 국제공인교정기관 · ISO/IEC 17025

Numerical references in the procedure below refer to Figure 41.

❶ Place the piston-cylinder module on a clean stable surface with the piston cap (2) up.

❷ Using a 3 mm Allen tool (supplied with PG7601-AF accessories), loosen the two sleeve retaining socket head screws (5) from the opposing sides of the main module housing (4).

In reassembly, after the two sleeve retaining screws (5) are installed, the sleeve (7) must still have a small amount of freedom to move and rotate within the main module housing (4). Do not over tighten the screws.

Step 1 and 2

❸ While firmly holding down the cap (2), use a 5 mm Allen tool (supplied with PG7601-AF accessories) to loosen the socket head cap retaining screw (1). The cap retaining screw will not fully disengage from the piston cap due to the adjustment mass (3). Gently remove the cap and screw from the assembly.

When installing the piston cap during reassembly, remember to reinstall the adjustment mass (3).

Step 3

❹ Remove the main module housing (4) by sliding it upward leaving the piston-cylinder and sleeve assembly behind.

Step 4

원문: Fluke Calibration PG7601 메뉴얼(영문) · 제조사 원문 자료입니다. 사양은 제조사 사정에 따라 변경될 수 있습니다.

❺ Reinstall the piston cap (2) directly onto the piston head (6). Using the cap as a handle, slide the piston out of the cylinder. Take care not to cock the piston in the cylinder at the point at which it leaves the cylinder.

Step 5

❻ Turn over the cylinder sleeve (7) so that the sleeve nut (10) is facing up.

❼ Using the sleeve nut tool (see Figure 39), remove the sleeve nut (5). The sleeve nut tool is a spanner that fits into the two holes on the sleeve nut.

The 50 and 200 kPa/kg module sleeve nuts have a right hand thread so they are loosened by turning counter-clockwise.

Step 6 and 7

❽ Holding the cylinder (9) in the open end of the cylinder sleeve (7), turn the cylinder sleeve over and allow the cylinder to gently slide out.

In reassembly, verify that the cylinder O-ring (8) is still located in the top of the cylinder sleeve (7). It is recommended that a thin film of vacuum grease (Krytox®) be applied to the top outside edge of the cylinder sleeve (7) where it mates with the main module housing (4). This must be applied before the sleeve is inserted into the housing. The end of the cylinder marked with the serial number must enter the main module housing first.

In reassembly, the two sleeve retaining screws (5) MUST be reinstalled before pressure is applied to the piston-cylinder module. Damage to equipment and injury to personnel may result from pressurizing the piston-cylinder module without the sleeve retaining screws installed.

❾ To reassemble follow the steps above in reverse order. Follow the notes carefully and refer to the lubrication recommendations in Section 6.3.3.

© 2008 DH Instruments, a Fluke Company

원문: Fluke Calibration PG7601 메뉴얼(영문) · 제조사 원문 자료입니다. 사양은 제조사 사정에 따라 변경될 수 있습니다.

we measure, we calibrate, we validate.
KOLAS 국제공인교정기관 · ISO/IEC 17025

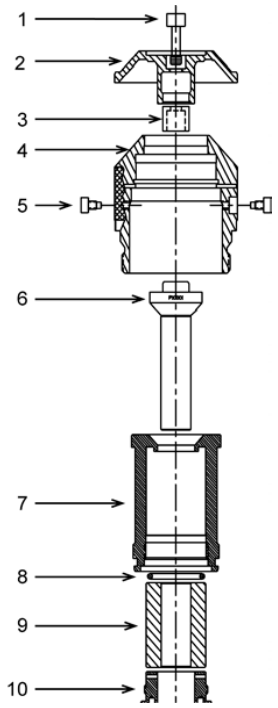

Figure 41. 50, 200 kPa/kg gas piston-cylinder modules (expanded view)

6.3.2 CLEANING PISTON-CYLINDERS

6.3.2.1 OVERVIEW

PG7601-AF piston-cylinders are high precision metrological assemblies. The annular gap between the piston and the cylinder is typically less than 1 micron (0.00004 in.). In normal operation, this space is lubricated by the test gas. If the space becomes contaminated, usually due to foreign matter carried by the gas, PG7601-AF performance can be affected. Symptoms of contamination of the space (a **dirty** piston-cylinder) include:

- **Difficulty rotating piston:** The motorized rotation system (if present) is unable to start piston rotation.
- **Decay in rotation rate is more rapid than normal:** Piston rotation slows down too quickly, especially at low mass loads.
- **Poor sensitivity:** Very small mass changes do not have usual effect.
- **Noisy pressure:** The pressure defined when the piston is floating is not as stable as it usually is.

If any of these symptoms is present, it **may** be caused by a **dirty** piston-cylinder. The piston-cylinder module should be disassembled and the piston-cylinder cleaned.

원문: Fluke Calibration PG7601 메뉴얼(영문) · 제조사 원문 자료입니다. 사양은 제조사 사정에 따라 변경될 수 있습니다.

Normal cleaning frequency of gas operated piston-cylinder modules is on the order of once every 40 to 60 hours of operation. If symptoms of contamination develop rapidly with operation after cleaning, there is almost certainly a source of contamination within the PG7601-SYS-AF system. This source must be eliminated to reduce piston-cylinder cleaning frequency. Usually, the source is the return of unclean gas from DUTs that have contaminated the system or the test gas supply (which contains humidity or lubricating oil).

The PG7601-AF piston-cylinder module design affords maximum protection to the piston-cylinder element assuring that it is protected during routine piston-cylinder handling. Cleaning the piston-cylinder requires disassembly of the module and exposure of the piston-cylinder to possible damage. These risks include damage to the critical working surfaces getting the piston cocked in the cylinder when putting taking them apart or putting them together. Only qualified personnel should undertake piston-cylinder cleaning and the instructions and recommendations contained in this manual should be followed carefully throughout the operation.

6.3.2.2 WATER/DETERGENT METHOD

Of the two cleaning methods, the water/detergent method is more time consuming but it is also more thorough.

DO NOT undertake piston-cylinder module disassembly without familiarizing yourself with Section 6.2 of this manual. Incorrect disassembly may damage or destroy the piston-cylinder element.

❶ Disassemble the piston-cylinder module following the instructions given in Section 6.3.1.1 for PC-7100/7600-10-L and Section 6.3.1.3 for PC-7100/7600-50 and -200.

❷ Reinstall the cap on the piston and insert the piston into the cylinder.

❸ Create a bath of water and mild liquid dishwashing detergent. Distilled water is acceptable. De-ionized water is best. Detergent must be free of additives (i.e., lotions or softening agents which may leave a residue after cleaning). To avoid undesired thermal effects, bring the bath to room temperature.

❹ Holding the piston-cylinder assembly by the outside of the cylinder and the piston cap, submerge the assembly in the bath. Using a rotating motion, thoroughly work the detergent into the piston-cylinder assembly.

❺ With the piston-cylinder still assembled, thoroughly rinse the assembly in a bath of water only. Use the same rotating motion as in the previous step.

❻ Remove the piston from the cylinder and thoroughly dry all areas of the assembly using a lint free wipe or towel. DO NOT touch the critical lapped surfaces of the piston or the cylinder with anything other than the drying wipe. Use only one side of the wipe during this process as the other side will become contaminated by contact with the operator's hands. Just dry thoroughly.

© 2008 DH Instruments, a Fluke Company

원문: Fluke Calibration PG7601 메뉴얼(영문) · 제조사 원문 자료입니다. 사양은 제조사 사정에 따라 변경될 수 있습니다.

TS-TL-FLK-094

we measure, we calibrate, we validate.
KOLAS 국제공인교정기관 · ISO/IEC 17025

❼ Test the mobility of the piston in the cylinder by simultaneously moving the piston in and out of the cylinder and rotating them one relative to the other. The piston should feel perfectly free, like an air bearing, with no evidence of mechanical contact. If it does not, back up in the cleaning process. If the assembly temperature was elevated during cleaning, it may be necessary to wait to allow the temperature of the assembly to return to ambient temperature before the assembly will operate normally. With experience, the difference in feel between a piston-cylinder that is truly clean, and any other condition, becomes obvious.

❽ Reassemble the piston-cylinder module following the instructions given in Section 6.3.1.1 for PC-7100/7600-10-L and Section 6.3.1.3 for PC-7100/7600-50 and -200 (start with the last step).

6.3.2.3 QUICK METHOD

Of the two cleaning methods, the quick method is less demanding but it is less thorough.

DO NOT undertake piston-cylinder module disassembly without familiarizing yourself with Section 6.2 of this manual. Incorrect disassembly may damage or destroy the piston-cylinder.

❶ Disassemble the piston-cylinder module following the instructions given in Section 6.3.1.1 for PC-7100/7600-10-L and Section 6.3.1.3 for PC-7100/7600-50 and -200.

❷ Reinstall the cap on the piston.

❸ Apply a small amount of Dow Corning® OS-20 or glass cleaner to a lint free wipe. If glass cleaner is used, slightly dilute the cleaner using distilled or de-ionized water to help ensure that no residue will be left behind. Wipe the lapped surfaces (polished appearance) of both the piston and cylinder with the cleaner.

❹ Using a separate, clean, lint free wipe, wipe the surfaces again to remove any remaining moisture. If canned air is available, blow the surfaces off with a **slow** flow of air.

❺ Test the mobility of the piston in the cylinder by simultaneously moving the piston in and out of the cylinder and rotating them one relative to the other. They should feel perfectly free, like an air bearing, with no evidence of mechanical contact. If there is any feel of resistance or friction, back up in the cleaning process. If the assembly temperature was elevated during cleaning, it may be necessary to wait to allow the temperature of the assembly to return to ambient temperature before the assembly will operate normally. With experience, the difference in feel between a piston-cylinder that is truly clean, and any other condition, becomes obvious.

❻ Reassemble the piston-cylinder module following the instructions given in Section 6.3.1.1 for PC-7100/7600-10-L and Section 6.3.1.3 for PC-7100/7600-50 and -200 (start with the last step).

원문: Fluke Calibration PG7601 메뉴얼(영문) · 제조사 원문 자료입니다. 사양은 제조사 사정에 따라 변경될 수 있습니다.

6.3.3 LUBRICATING PISTON-CYLINDER MODULES

The purpose of piston-cylinder module lubrication is to minimize wear to components of the piston-cylinder module. The proper long term functioning of the module requires that specific areas of certain components be properly lubricated, especially after they have been cleaned.

Lubricant

Vacuum Grease: DuPont Krytox GPL-205/6 is the recommended lubricant. Krytox is selected because it is a non-reactive, nonflammable, hydrocarbon free grease. Very small amounts are used. Krytox is made of perfluoropolyether (PFPE) thickened with polytetrafluoroethylene (PTFE). Users should avoid contact with eyes and skin.

A tube of Krytox GPL-205/6 is included in the PG7601-BAS-AF accessory kit.

Where to lubricate

The lubrication chart in Figure 42 shows the areas that require application of vacuum grease. A thin film (i.e. just enough lubricant to fully cover the area indicated) applied to these areas is all that is necessary. Lubrication with more than a thin film will increase the cost of lubrication and may result in contamination of the piston and/or cylinder. Areas not indicated for lubrication should be kept free from vacuum grease.

Lubricating O-rings

O-rings identified for lubrication should be lubricated prior to installation. During service O-rings may be left in place and a thin film of vacuum grease applied to the outside diameter. Vacuum grease may be applied by placing a drop (3-4 mm diameter - approximately 15-30 mg) of grease between the thumb and forefinger and then rolling the O-ring between the thumb and forefinger to apply a thin film over the entire o-ring (use of gloves is recommended). An alternate method is to place a drop (3-4 mm diameter - approximately 15-30 mg) of vacuum grease in a small zip closure plastic bag (just large enough to fit the largest O-ring). Place the O-ring in the bag, close the bag, and then gently work the vacuum grease over the entire O-ring.

Spring carrier lubrication

The spring carrier is lubricated at **DHI**. Under normal conditions it is not necessary for the user to remove the spring carrier for lubrication. In the event that lubrication is necessary, use caution during disassembly. Remove the clip, spacer, spring carrier and springs (qty 6). Lubricate the spring carrier as shown in the lubrication chart. Reassemble, using care to install the springs, spacer and clip in the reverse order of disassembly.

Pistons and cylinders

Pistons and cylinders should be kept perfectly free from vacuum grease and any other contaminant. Vacuum grease or other contaminants on the piston or cylinder will prevent the piston-cylinder from operating correctly (see Section 6.3.2).

© 2008 DH Instruments, a Fluke Company

원문: Fluke Calibration PG7601 메뉴얼(영문) · 제조사 원문 자료입니다. 사양은 제조사 사정에 따라 변경될 수 있습니다.

TS-TL-FLK-094

we measure, we calibrate, we validate.
㈜테솔 · www.tessol.com TS-TL-FLK-094 199 / 234
KOLAS 국제공인교정기관 · ISO/IEC 17025

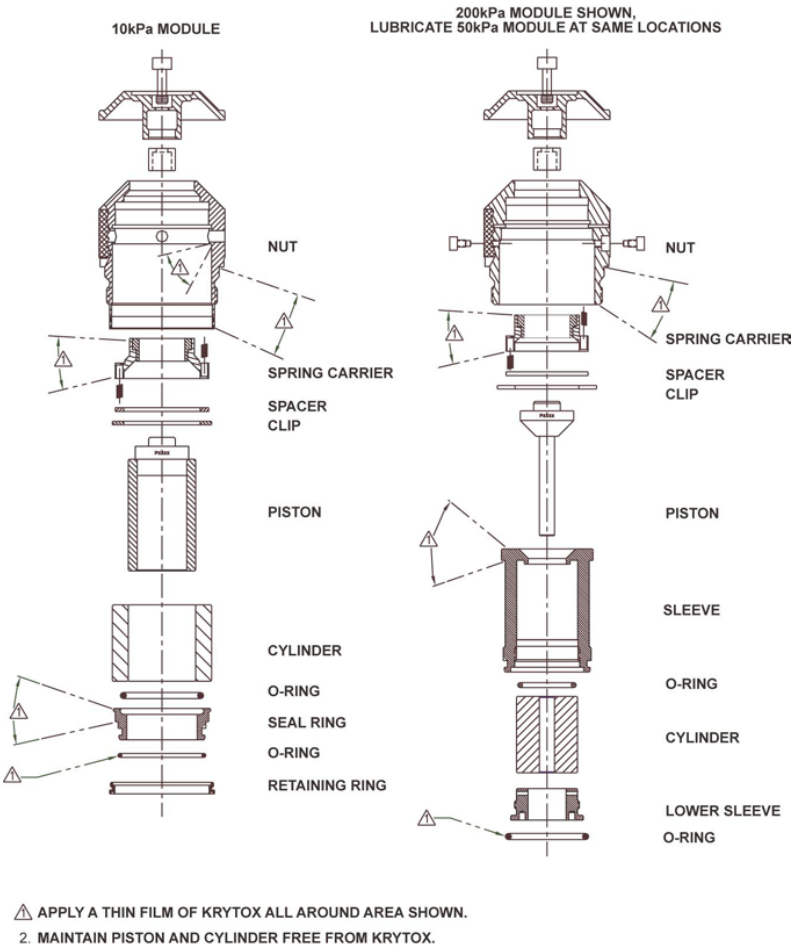

Figure 42. Piston-cylinder module lubrication chart

6.4 PLATFORM

6.4.1 PISTON POSITION DETECTION ADJUSTMENT

Overview

The PG7601-AF piston position measurement operates on the LVDT principle. There are coils mounted on either side of the piston-cylinder module mounting post and a ring on the inside of the mass loading bell acts as the sensor element. As the bell moves, the LVDT signal changes proportionally to bell position, and therefore piston position. The signal is translated into relative position in the ± 4.5 mm stroke of the piston (see Section 4.1.5). The piston position and fall rate can be viewed in the **[SYSTEM]** run screen (see Section 4.3.5).

The piston position indication system can be realigned by an automated on-board routine. This routine sets and records the LVDT output at the piston high and low stop positions and linearizes the output between the two extremes.

Procedure

Refer to piston stroke schematic Figure 15.

원문: Fluke Calibration PG7601 메뉴얼(영문) · 제조사 원문 자료입니다. 사양은 제조사 사정에 따라 변경될 수 있습니다.

To automatically adjust the PG7601-AF piston position indication system, load the mass bell only on the piston. Then press **[SPECIAL]**, **<7cal>**, **<5Pposition>**, **<2cal>.**

The prompt **<Hold piston at max down stop>** appears. Place the piston in the fully down position and hold down piston very firmly or load 5 kg of mass. Be sure springs in module are fully compressed so that the piston is truly at the low stop position. Press **[ENTER]**.

The prompt **<Hold piston at max up stop>** appears. Place the piston in the fully up position. To do so, apply pressure underneath the piston that is equivalent to at least 5 kg greater than the pressure required to float the piston and bell. Be sure the springs in the module are fully compressed so that the piston is truly at the top stop position (it is very difficult to do this reliably manually, without applying a pressure). Press **[ENTER]**. The adjustment process is complete.

To check the results, press **[SPECIAL]**, **<7cal>**, **<5Pposition>**, **<1view>** to view piston position digitally over the complete stroke (see Section 4.3.5.1). When the piston is fully down, the indication should be within ±0.05 mm of -4.5 mm. When the piston is fully up, the indication should be within ±0.05 mm of +4.5 mm.

6.4.2 DRIVE BELT REPLACEMENT

Overview

Periodic replacement of the drive system belts may be necessary to retain maximum performance of the motorized rotation engagement system. Due to specific material properties of the drive belts, it is important that only genuine **DHI** replacement parts be used.

A spare drive belt set is included in the accessories delivered with the PG7601-AF platform.

Procedure

To remove the drive belts:

❶ Using a 2.5 mm Allen tool (supplied in the PG7601-AF accessories), remove the three screws on the outer diameter of the pulley plate. **Do not remove the screws on the inner diameter.** The pulley plate is located directly around the mounting post. Lift the pully plate up off the platform.

❷ Remove the two drive belts and replace them with the new ones.

❸ Realign the notched pulley with the pins on the drive motor.

❹ Replace the pulley plate and three screws.

❺ Engage the drive system to ensure proper operation (see Section 4.3.8).

6.4.3 DISASSEMBLY AND REASSEMBLY OF PG7601-AF

6.4.3.1 PLATFORM

Overview

Disassembly of the PG7601-AF platform is not recommended. No internal parts require regular maintenance. A possible exception is the mounting post PRT which may be removed for recalibration. However, the recommended recalibration procedure is to calibrate it in-situe by comparison with a reference PRT (see Section 7.3.4).

© 2008 DH Instruments, a Fluke Company

원문: Fluke Calibration PG7601 메뉴얼(영문) · 제조사 원문 자료입니다. 사양은 제조사 사정에 따라 변경될 수 있습니다.

we measure, we calibrate, we validate.
KOLAS 국제공인교정기관 · ISO/IEC 17025

Procedure

To disassemble the platform and remove the mounting post platinum resistance thermometer, proceed as follows:

❶ Remove the piston-cylinder module from the mounting post (see Section 3.3.5) and replace with the ORANGE storage plug.

❷ Disconnect the PG7000 Platform from the PG7000 Terminal.

❸ Invert the PG7000 Platform so that the bottom of the platform is up. Support the platform so that it does not tip over. A simple solution is to place the platform upside down on a sturdy box which is smaller than the outside platform dimensions and is also tall enough to allow the mounting post to be suspended.

❹ Remove the six socket head screws (3 mm) around the perimeter of the platform.

❺ Lift the base cover plate gently and carefully disconnect the sensor leads at their board connections, noting their locations. Remove the cover plate and electronic board attached to it.

❻ **If removing the mounting post PRT:** Loosen - **but do not remove** - the four socket head screws (3 mm) located on the PRT/cable pass through plate. The plate is located on the inside of the base.

❼ Slide the PRT out of the mounting post.

To reassemble continue as follows:

❽ After reinserting the PRT into the mounting post and tightening the four socket head screws, reassemble following the steps above in reverse order. Thermal grease may be applied lightly to the PRT, if available. If the sensor lead locations were not noted correctly, follow Table 40.

❾ Power up PG7000 and verify proper operation of all on-board sensors.

Table 40. PG7601-AF mounting post wire colors, description and location

WIRE COLORS	DESCRIPTION AND LOCATION
Black/Black/Black/Black	Vacuum Sensor (center raised micro board)
White/White/Yellow/Yellow	Mounting Post PRT (P2)

6.4.3.2 TERMINAL

To open the PG7601-AF Terminal proceed as follows:

❶ Disconnect power.

❷ Remove the pop-off screw covers on the bottom of the case.

❸ Remove the four case screws.

❹ Lift OFF the cover. Be careful not to over stress the ribbon cables connecting the display and keypad in the cover to the printed circuit board in the base.

❺ Disconnect the cover to base ribbon cables at the connectors on the base printed circuit board. Be aware that the connectors are locking connectors.

❻ To reassemble, proceed in reverse order.

6.5 ADJUSTING PRESSURE CONTROLLER INTERNAL

원문: Fluke Calibration PG7601 메뉴얼(영문) · 제조사 원문 자료입니다. 사양은 제조사 사정에 따라 변경될 수 있습니다.

TS-TL-FLK-094

we measure, we calibrate, we validate.
KOLAS 국제공인교정기관 · ISO/IEC 17025

PRESSURE SENSOR

OVERVIEW

The PPC3-7M-AF pressure controller of the PG7601-SYS-AF system has an internal pressure sensor. The drift over time of the pressure sensor may cause it to disagree excessively with the PG7601-AF which reduces the efficiency of the automated pressure control routine function. To maintain good agreement between the PPC3-7M-AF pressure controller internal sensor and the PG7601-AF, the pressure controller internal sensor must be adjusted to agree with the PG7601-AF.

There are frequent opportunities to compare the pressure set by the PG7601-AF and the pressure read by the PPC3-7M-AF internal pressure sensor. Each time the PG7601-AF piston is floating and *Ready*, the exact pressure defined by the PG7601-AF is displayed on the PG Terminal. At the same time, the pressure measured by the PPC3-7M-AF is displayed on the PPC3-7M-AF front panel. Compare the two values. They should not disagree by more than 7 kPa (1 psi). If the disagreement is greater than 1 psi, the PP3-7M-AF internal sensor should be adjusted.

In absolute measurement mode, the PPC3-7M-AF internal pressure sensor can be adjusted with a simple one point calibration using the PPC3 AutoZ function. In gauge mode, AutoZ runs automatically when the PPC3-7M-AF is in the vented condition (see the PPC3 Operation and Maintenance manual for additional information). If running the AutoZ function is not sufficient, the full multi-point calibration should be considered.

The pressure measurements made by the PPC3-7M-AF utility sensor are used only for pressure control and indication. They have no metrological function therefore they do not require traceable calibration. Adjustment of the PPC3 utility sensor is performed only for operational reasons.

PROCEDURE FOR AutoZ IN ABSOLUTE MODE (ONE POINT CAL) OF THE PPC3-7M-AF INTERNAL SENSOR

For additional detailed information on the principles and procedures for the AutoZ of PPC3-7M-AF, see the PPC3 Operation and Maintenance manual.

To AutoZ (calibrate on one point) the the PPC3-7M-AF internal pressure sensor, proceed as follows:

❶ With AutoGen ON (see Section 4.3.9), vent the PG7601-SYS-AF system using **[ENTER/SET P]** to set a pressure of **<0>** (see Section 4.3.11.3).

Check that the PPC3-7M-AF is vented (red LED on PPC3-7M-AF **[VENT]** lit).

❷ Use **[MODE]** on the PG Terminal to put set absolute measurement mode (see Section 4.3.4). The PG Terminal displays the current value of atmospheric pressure as measured by the PG7601-AF internal barometer.

❸ Press **[ESC]** on the PPC3-7M-AF front panel to allow access to the front panel functions

© 2008 DH Instruments, a Fluke Company

원문: Fluke Calibration PG7601 메뉴얼(영문) · 제조사 원문 자료입니다. 사양은 제조사 사정에 따라 변경될 수 있습니다.

we measure, we calibrate, we validate.
㈜테솔 · www.tessol.com TS-TL-FLK-094 203 / 234
KOLAS 국제공인교정기관 · ISO/IEC 17025

TS-TL-FLK-094

Use **[SPECIAL]**, **<1AutoZ>**, **<4run>** on the PPC3-7M-AF front panel to access the function to run AutoZ. This display is:

1. Real time reading, pressure unit of measure and measurement mode of the utility sensor.
2. Utility sensor designator.
3. Entry field for the value of $\mathbf{P_{std,0}}$. in the current pressure unit of measure.

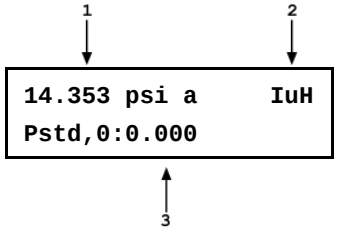

Enter the value of atmospheric pressure indicated on the PG Terminal for $P_{std,0}$ and press **[ENT]**.

❹ The next screen is:

P_{offset} is the value that PPC3-7M-AF uses to offset its utility sensor to agree with P_{std}. This value is always in Pascal [Pa].

```
Old Poffset: 0.0 Pa
New Poffset: 8.3 Pa
```

Press **[ENT]** to accept the new value of P_{offset}. or **[ESC]** to reenter P_{std}. When a new value of P_{offset}.is accepted, PPC3-7M-AF operation returns to the MAIN RUN screen. The measured pressure value displayed by the vented PPC3-7M-AF should agree with the value atmospheric pressure on the PG Terminal within better than 0.7 kPa (0.1 psi).

PROCEDURE FOR FULL (MULTI-POINT) CALIBRATION OF THE PPC3-7M-AF INTERNAL SENSOR

For additional detailed information on the principles and procedures for the calibration of PPC3-7M-AF, see the PPC3 Operation and Maintenance manual. CalTool for RPTs software may be used to assist in adjusting the PPC3-7M-AF utility sensor.

Before running the full internal sensor recalibration procedure, try the simple AutoZ function described above in this section.

To validate and, if necessary, adjust the PPC3-7M-AF internal pressure sensor, proceed as follows:

❶ Install the 200 kPa/kg piston-cylinder module in the PG7601-AF.

❷ Put the PG7601-AF into absolute measurement mode (see Section 4.3.4).

Turn AutoZ OFF on the PPC3-7M-AF if it is ON using **[SPECIAL]**, **<1AutoZ>**, **<1off>** from the PPC3-7M-AF front panel.

Record the PPC3-7M-AF **PA** and **PM** calibration coefficient values using **[SPECIAL]**, **<8cal>**, **<1Hi RPT>**.

❸ Use the PG7601-AF in normal operation to set a nominal pressures of 5, 200, 400, 600, 800 and 1 000 psi absolute.

❹ At each pressure, record the actual pressure generated by the PG7601-AF and the reading of the PPC3-7M-AF controller.

❺ Set zero pressure to vent the system.

❻ Evaluate the data:

If the disagreement between the PG7601-AF actual pressure and the PPC3-7M-AF indicated pressure is less than 0.5 psi at all points, it is unlikely to be useful to adjust the PPC3-7M-AF. Turn AutoZ back on using **[SPECIAL]**, **<1AutoZ>**, **<1on>** from the PPC3-7M-AF front panel and the validation procedure is complete.

© 2008 DH Instruments, a Fluke Company

원문: Fluke Calibration PG7601 메뉴얼(영문) · 제조사 원문 자료입니다. 사양은 제조사 사정에 따라 변경될 수 있습니다.

If the disagreement between the PG7601-AF actual pressure and the PPC3-7M-AF indicated pressure exceeds 0.5 psi, adjusting the PPC3-7M-AF is likely to improve automated pressure control efficiency.

❼ Enter the calibration pressures and PPC3 readings into a spreadsheet. Calculate the "non-corrected" PPC3 readings by backing out the PA and PM recorded in Step ❷ above:

non-corrected reading = (corrected reading - PA)/PM

Perform a linear regression to find the offset and slope that best fit the non-corrected PPC3-7M-AF readings to the PG7601-AF actual pressures. The offset is the new value of PA; the slope is the new value of PM.

Turn AutoZ back on using **[SPECIAL]**, **<1AutoZ>**, **<1on>** from the PPC3-7M-AF front panel.

❽ Validate the PPC3-7M-AF by repeating the application of pressures, if desired.

CalTool for RPTs software can be used to assist in adjust the PPC3-7M-AF utility sensor. CalTool for RPTs is included on the PG7000 Metrology Support Disc.

6.6 REFERENCE VACUUM PUMP

The D16B reference vacuum pump is a stand alone component with its own Operation and Maintenance Manual. See the Trivac B Rotary Vane Vacuum Pump Operating Instructions provided on the PG7601-SYS-AF Support Disc.

6.6.1 CHECK/TOP OFF OIL LEVEL

Numerical references refer to Figure 12.

Be sure pump is OFF before removing oil fill plug or adding oil.

During operation of the D16B vacuum pump, the oil level must always remain between the minimum (8) and maximum (7) oil level marks on the oil level sight glass (10).

Check the level in the site glass and top off if necessary.

To top off the oil level, turn the pump OFF, then remove the oil fill plug (6) using an 8 mm Allen wrench. Add oil as necessary.

The oil used in the D16B pump is a commonly available, hydro carbon based oil designated HE200 (N62 in Europe). Add only Leybold(R) HE200 vacuum pump oil or equivalent.

6.6.2 DRAIN AND REFILL OIL

Numerical references refer to Figure 12.

To drain oil, pump must be OFF, but still warm.

Turn the pump OFF, but it should be warm.

© 2008 DH Instruments, a Fluke Company

원문: Fluke Calibration PG7601 메뉴얼(영문) · 제조사 원문 자료입니다. 사양은 제조사 사정에 따라 변경될 수 있습니다.

TS-TL-FLK-094

we measure, we calibrate, we validate. ㈜테솔 · www.tessol.com TS-TL-FLK-094 205 / 234

KOLAS 국제공인교정기관 · ISO/IEC 17025

Remove the oil drain plug (9) and let the oil drain into a suitable container. When the flow of oil slows down, screw the oil drain plug back in, briefly switch ON the pump (max. 10 seconds) and then switch it OFF again. Remove the oil drain plug once more and drain out the remaining oil.

Screw the oil drain plug back in (check that the flat gasket is properly positioned). Remove the oil fill plug (6) and fill with fresh oil to the maximum oil level (7).

6.7 RELOADING EMBEDDED SOFTWARE INTO PLATFORM OR PRESSURE CONTROLLER FLASH MEMORY

PG7601-AF and PPC3-7M-AF use FLASH memory. This allows the embedded software that controls PG7601-AF operations and functions to be loaded into them from a personal computer using a simple FLASH loading utility.

PG7601-AF FLASH memory is loaded over its COM2 port using a NULL MODEM cable.

PPC3-7M-AF FLASH memory is loaded over its COM1 port using a standard, straight through, pin to pin RS232 cable.

To replace corrupted software or upgrade to a new version, visit **www.dhinstruments.com**. The appropriate software for the product and the WinFlash flash loading utility can be dowloaded there. Be sure to identify and use the embedded software specifically for PG7601-AF and PPC3-7M-AF, not the standard commercial versions.

If the embedded software you are using is suspected of having a problem, record all symptoms and contact a **DHI** Authorized Service Provider.

A NULL MODEM cable must be used to flash embedded software into the PG7601-AF. A NULL MODEM cable is supplied with the PG7601-AF accessories. It is a well known cable configuration available from most cable and computer product suppliers. A "straight-through" cable such as that used for standard RS232 communications will NOT communicate to allow flash memory writing.

6.8 STORAGE AND SHIPPING

6.8.1 SHORT AND LONG TERM STORAGE

The following is recommended for short or long term storage of PG7601-AF.

❶ Remove all masses from the PG7601-AF platform.

❷ Vent all circuits to atmosphere.

❸ Turn OFF power using the power switches on the rear of the PG7601-AF Terminal, the rear of the PPC3-AF-7M and the side of the D16B vacuum pump.

❹ Cover the PG7601-AF platform and mass set with the dust covers included in the platform and mass set accessories.

For storage longer than one year, consider packing the for shipping as described in Section 6.8.2.

원문: Fluke Calibration PG7601 메뉴얼(영문) · 제조사 원문 자료입니다. 사양은 제조사 사정에 따라 변경될 수 있습니다.

we measure, we calibrate, we validate.
㈜테솔 · www.tessol.com TS-TL-FLK-094 206 / 234
KOLAS 국제공인교정기관 · ISO/IEC 17025

TS-TL-FLK-094

6.8.2 PREPARATION FOR SHIPPING

6.8.2.1 PISTON-CYLINDER MODULES

To pack the piston-cylinder modules proceed as follows (see Section 3.1.2.1):

❶ If a piston-cylinder module is mounted in the PG7601-AF platform, remove it from the platform (see Section 3.3.5).

❷ Return all piston-cylinder modules to their bullet cases.

❸ Place the bullet cases in the molded transit case in which the piston-cylinders were originally delivered.

❹ The transit case can be shipped “as is” or protected by a corrugated container.

6.8.2.2 MASS SET

To pack the mass set for shipping proceed as follows (see Section 3.1.2.2):

❶ Place each mass in a protective plastic bag (not necessary for trim masses).

❷ Pack the individual masses into the mass holding inserts the molded mass transit cases in which they were delivered. Remember to include the mass loading bell.

❸ The transit case can be shipped “as is” or protected by a corrugated container.

6.8.2.3 PLATFORM

To pack the PG7601-AF platform for shipping proceed as follows (see Section 3.1.1.1):

❶ If a piston-cylinder module is mounted in the PG7601-AF platform, remove it from the platform (see Section 3.3.5). Install the ORANGE protective mounting post plug that was delivered with platform.

❷ Disconnect the platform to PG Terminal cable. Disconnect the power cord from the PG Terminal.

❸ Remove the vacuum vent valve from the **VENT** port on the rear panel.

Disconnect the connection at the **TEST** port by unscrewing the gland nut on the port.

❹ Plug or cap the rear panel **TEST** and **VENT** ports.

Cap the vacuum reference port using a KF25 centering ring, clamp and cap (cap was installed on unit as delivered).

❺ Screw the two platform leveling feet all the way in.

❻ Remove the upper packing insert from the PG7601-AF molded transit case.

❼ Gently place the PG7601-AF platform into the case, aligning in the lower packing insert so the KF25 vacuum connection and rear panel fittings fit into the recesses provided for them.

❽ Reinstall the upper packing insert into the case. Place the PG Terminal, cables and vacuum vent valve (if desired) into the recesses provided for them in the top of the upper packing insert. Close the case.

© 2008 DH Instruments, a Fluke Company

원문: Fluke Calibration PG7601 메뉴얼(영문) · 제조사 원문 자료입니다. 사양은 제조사 사정에 따라 변경될 수 있습니다.

TS-TL-FLK-094

we measure, we calibrate, we validate.
㈜테솔 · www.tessol.com TS-TL-FLK-094 207 / 234
KOLAS 국제공인교정기관 · ISO/IEC 17025

6.8.2.4 PRESSURE CONTROLLER

To pack the PPC3-7M-AF pressure controller for shipping proceed as follows (see Section 3.1.1.2):

❶ Remove pressure from the supply and then disconnect the **SUPPLY** connection on the rear panel. Remove the adaptor from the **SUPPLY** port.

Plug or cap the **SUPPLY** port.

❷ Remove the vacuum from the vacuum supply and disconnect the **EXHAUST** connection on the rear panel. Remove the adaptor from the **EXHAUST** port.

Plug or cap the **EXHAUST** port.

❸ Remove the power cable from the rear panel power connection.

❹ Place the PPC3-7M-AF in a plastic bag.

❺ Pack the PPC3-7M-AF in the corrugated container and inserts that it was originally shipped in or in a suitable, padded container. Be sure to protect the front panel keypad and display from contact.

6.8.2.5 VACUUM PUMP

To pack the D16B vacuum pump for shipping proceed as follows (see Section 3.1.1.3):

❶ Disconnect the smoke eliminator from the outlet port.

Cap the outlet port using a KF25 clamp, centering ring and the rubber cover with which it was originally shipped or another cover.

❷ Disconnect the vacuum hose from the inlet port.

Cap the port using a KF25 clamp, centering ring and the rubber cover with which it was originally shipped or another cover. Be sure to retain the screen in the port.

❸ The oil does not need to be removed from the pump for shipping.

❹ Place the D16B vacuum pump into a plastic bag.

❺ Pack the D16B vacuum pump in the corrugated container and inserts that it was originally shipped in or in a suitable, padded container.

원문: Fluke Calibration PG7601 메뉴얼(영문) · 제조사 원문 자료입니다. 사양은 제조사 사정에 따라 변경될 수 있습니다.

we measure, we calibrate, we validate.
㈜테솔 · www.tessol.com TS-TL-FLK-094 208 / 234
KOLAS 국제공인교정기관 · ISO/IEC 17025

TS-TL-FLK-094

7. Maintenance of Traceability and Recalibration

7.1 PRINCIPLES OF SYSTEM TRACEABILITY MAINTENANCE

In the PG7601-SYS-AF system, traceable, low uncertainty pressure definition is provided by the PG7601-AF gas operated piston gauge.

The maintenance of traceability and associated recalibration of the PG7601-AF requires metrological maintenance procedures that are performed locally at regular intervals (see Section 7.2) and the regular recalibration of certain system elements (see Section 7.3).

7.2 LOCAL METROLOGICAL MAINTENANCE BETWEEN RECALIBRATIONS

7.2.1 OVERVIEW

To assure that the PG7601-AF operates within pressure measurement uncertainty limits between recalibrations, certain metrological maintenance functions are required. These are summarized in Table 41, including cross-reference to manual sections detailing each procedure.

Table 41. Metrological maintenance procedures

COMPONENT	PROCEDURE	DESCRIPTION	FREQUENCY	SEE SECTION
PG7601	Adjust on-board P, T, H sensors	Verify PG7601-AF Platform ambient pressure, temperature and humidity sensor readings relative to a standard and adjust if necessary.	6 months, increase to 1 year when justified by experience	7.2.2

7.2.2 PLATFORM, ADJUST ON-BOARD P, T, H SENSORS

The PG7601-AF platform includes sensors to measure ambient conditions. The values measured are used to calculate ambient air density which is used to make the air buoyancy correction to the force applied by the PG7601-AF masses in gauge mode. The measurements of the ambient conditions sensors have no function when the PG7601-AF is used in absolute measurement mode.

The PG7601-AF platform also includes a vacuum gauge to measure the residual pressure under the bell jar in absolute measurement mode. The vacuum gauge adjustment is made using a PA and a PM on the same principle as the other ambient condition sensors. See Section 7.3.5 for information on the vacuum gauge calibration.

© 2008 DH Instruments, a Fluke Company

원문: Fluke Calibration PG7601 메뉴얼(영문) · 제조사 원문 자료입니다. 사양은 제조사 사정에 따라 변경될 수 있습니다.

TESSOL Technical Library
TS-TL-FLK-094
we measure, we calibrate, we validate.
㈜테솔 · www.tessol.com TS-TL-FLK-094 209 / 234
KOLAS 국제공인교정기관 · ISO/IEC 17025

The on-board measurement sensors are:

- Barometric pressure sensor
- Relative humidity sensor
- Ambient temperature sensor

The ambient conditions sensors are verified and adjusted relative to a reference without being removed from the platform. The relatively wide measurement uncertainty specification of the on-board sensor should be taken into consideration when selecting a reference relative to which to adjust them. They do not require a high level reference.

The PG7601-AF CAL function supports a user defined adder and multiplier that are used to offset and, if necessary, adjust the slope of the sensors output. The adder and multiplier adjust the sensor output as follows:

Corrected Output = (Measured Output X Multiplier) + Adder

Where:

- Corrected output, measured output and adder are in the current unit of measure of the sensor
- Multiplier is dimensionless

[SPECIAL], **<7cal>** provides capabilities to view internal sensor outputs and edit their Adders and Multipliers. The CAL view function provides an additional digit of resolution relative to other displays of internal sensor outputs. To calibrate or adjust the on-board sensors, compare their outputs to a reference and adjust the corresponding Adder and/or Multiplier as needed to arrive at acceptable agreement.

See Section 7.2.2.1 for information on calibration of the barometric pressure sensor.

See Section 7.2.2.2 for information on calibration of the ambient temperature sensor.

See Section 7.2.2.3 for information on calibration of the ambient humidity sensor.

7.2.2.1 BAROMETRIC PRESSURE SENSOR

❍ PURPOSE

To view and adjust the output of the on-board barometric pressure sensor.

❍ OPERATION

To view the output of the barometric pressure sensor, press **[SPECIAL]**, **<7cal>**, **<1atmp>**, **<1view>**. The display is:

1. Current reading of the barometric pressure sensor in current pressure unit of measure.
2. Indication that this is a barometric pressure sensor display.
3. Current value of the Pressure Multiplier applied to the barometric pressure sensor reading.
4. Current value of the Pressure Adder (always in Pascal [Pa]) applied to the barometric pressure sensor reading.

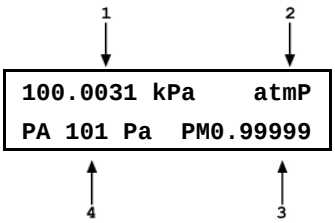

To adjust the values of PA and/or PM press **[SPECIAL], <7cal>, <1atmP>**, **<2cal>** to access a screen in which the values of PA and PM can be edited. Normally, only PA is adjusted. From here, press **[ESCAPE]** and select **<1atmP>**, **<1view>** to view the barometric sensor reading with the edited calibration coefficients applied.

원문: Fluke Calibration PG7601 메뉴얼(영문) · 제조사 원문 자료입니다. 사양은 제조사 사정에 따라 변경될 수 있습니다.

See Section 7.2.2 for an explanation of Adders and Multipliers and their use in adjusting internal sensors.

See Section 1.1.2.2 for barometric pressure sensor specifications.

7.2.2.2 AMBIENT TEMPERATURE SENSOR

PURPOSE

To view and adjust the output of the on-board ambient temperature sensor.

The ambient temperature sensor and piston-cylinder module temperature sensor are of the same technology and read in the same manner. However, their recommended calibration procedures differ reflecting the different measurement uncertainty specifications of the two measurements. See Section 7.3.4 for recommended calibration procedure on the piston-cylinder module temperature sensor, which is used to measure temperature with much lower uncertainty.

OPERATION

To view the output of the ambient temperature sensor, press **[SPECIAL]**, **<7cal>**, **<2ambT>**, **<1view>**. The display is:

1. Current reading of the ambient temperature sensor.
2. Indication that this is an ambient temperature display.
3. Current value of the Temperature Multiplier applied to the ambient temperature sensor reading.
4. Current value of the Temperature Adder (always in °C) applied to the ambient temperature sensor reading.

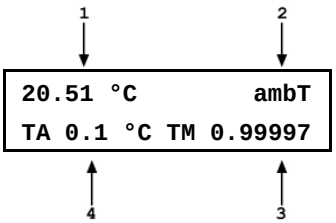

To adjust the values of TA and/or TM press **[SPECIAL]**, **<7cal>**, **<2ambT>**, **<2cal>** to access a screen in which the values of TA and TM can be edited. Normally, only TA is adjusted. From here, press **[ESCAPE]** and select **<2ambT>**, **<1view>** to view the ambient temperature sensor reading with the edited calibration coefficients applied.

See Section 7.2.2 for an explanation of Adders and Multipliers and their use in adjusting internal sensors.

See Section 1.1.2.2 for ambient temperature sensor specifications.

© 2008 DH Instruments, a Fluke Company

원문: Fluke Calibration PG7601 메뉴얼(영문) · 제조사 원문 자료입니다. 사양은 제조사 사정에 따라 변경될 수 있습니다.

7.2.2.3 RELATIVE HUMIDITY SENSOR

❍ PURPOSE

To view and adjust the output of the on-board relative humidity sensor.

❍ OPERATION

To view the output of the relative humidity sensor, press **[SPECIAL]**, **<7cal>**, **<3%RH>**, **<1view>**. The display is:

1. Current reading of the relative humidity sensor.
2. Indication that this is a relative humidity display.
3. Current value of the Humidity Multiplier applied to the relative humidity sensor reading.
4. Current value of the Humidity Adder (always in %RH) applied to the relative humidity sensor reading.

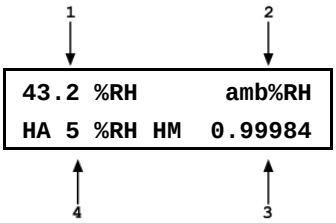

To adjust the values of HA and/or HM press **[SPECIAL]**, **<7cal>**, **<2cal>** to access a screen in which the values of HA and HM can be edited. Normally, only HA is adjusted. From here, press **[ESCAPE]** and select **<3%RH>**, **<1view>** to view the relative humidity sensor reading with the edited calibration coefficients applied.

See Section 7.2.2 for an explanation of Adders and Multipliers and their use in adjusting internal sensors.

See Section 1.1.2.2 for ambient humidity sensor specifications.

7.3 RECALIBRATION

7.3.1 OVERVIEW

❍ PRINCIPLE

Piston-cylinders and mass sets are recalibrated by redetermining the effective area of the piston-cylinder and the true mass values of the masses. It is recommended that piston-cylinders and mass sets be recalibrated at the end of their first and second years of operation. Then, based on their observed stability, a longer calibration interval can usually be assigned. Though other organizations may be able to perform these calibrations, it is recommended that a **DHI** Calibration Service be used, if possible.

The recalibration process may find values for piston-cylinder effective area, pressure coefficient and mass values that are different from the previous values. The PG7601-AF piston-cylinder and/or mass set digital IDs must be changed to reflect the new values (see Sections 4.5.1.7 and 4.5.1.12).

To assure that the PG7601-AF operates within pressure measurement uncertainty limits, certain metrology maintenance functions are required. See Section 7.2 for instructions on these procedures.

In addition to the metrology maintenance functions, to assure that the pressure values set and measured by the PG7601-AF remain within predicted measurement uncertainty levels over time, regular recalibration of certain components is required. The recalibrations required are summarized in Table 42, including cross-reference to manual sections detailing each procedure.

원문: Fluke Calibration PG7601 메뉴얼(영문) · 제조사 원문 자료입니다. 사양은 제조사 사정에 따라 변경될 수 있습니다.

Table 42. Recalibration requirements

SYSTEM	PROCEDURE	DESCRIPTION	FREQUENCY	SEE SECTION
PG7601	Calibration of piston-cylinder modules	Determination of piston-cylinder effective area and entry of new effective area value into PG7601-AF platform.	Yearly until decreased frequency justified by experience. Recommended end of first and second years, then every three years if no significant changes observed.	7.3.2
PG7601	Calibration of mass set	Determination of mass values of mass set and piston assembly and entry of new values into the PG7601-AF platform.	Yearly until decreased frequency justified by experience. Recommended end of first and second years, then every three years if no significant changes observed.	7.3.3
PG7601	Calibration of piston-cylinder temperature sensor.	Determination of offset of reading of platinum resistance thermometer mounted in PG7601-AF mounting post relative to a temperature standard and entry of new offset into the PG7601-AF platform.	Yearly until decreased frequency justified by experience. Recommended end of first and second years, then every three years if no significant changes observed.	7.3.4
PG7601	Calibration of residual vacuum gauge	Comparison of the vacuum gauge to a reference and adjustment of its zero and slope (PA and PM) if necessary.	6 months, increase to 1 year when justified by experience.	7.3.5

7.3.2 CALIBRATION OF PISTON-CYLINDER MODULES

7.3.2.1 PREPARING FOR CALIBRATION

Piston gauge piston-cylinder modules are often calibrated in a facility other than that in which the PG7601-AF is used.

If the calibration facility has a PG7601 platform and mass set, it may only be necessary to ship the PG7601-AF piston-cylinder modules for calibration. If not, the piston-cylinder modules, PG7601-AF platform and mass set may have to be shipped.

To ship the piston-cylinder module it must be removed from the PG7601-AFplatform. See Section 6.8.2.1 for instructions on removing the piston-cylinder module from the platform and packing it in its bullet case.

If the complete PG7601-AF system must be shipped, use the unpacking information in Section 6.8.2.3 to pack it.

7.3.2.2 UPDATING PISTON-CYLINDER MODULE DIGITAL IDs

Piston-cylinder module information is element specific metrological data. Uninformed or accidental altering of this information may lead to out of tolerance measurements. Piston-cylinder module information should only be edited by qualified personnel as part of the PG7601-AF calibration or recalibration process.

Normally, the recalibrated PG7601-AF piston-cylinder modules are returned with a digital ID file (*.did) containing the critical calibration on the piston-cylinder module. Use **CalTool for PG7000** software to view the digital ID files and to load them into PG7601-AF platform memory. See Section 7.4 for detailed **CalTool for PG7000** software information.

The piston-cylinder module information can also be updated from the PG7601-AF PG Terminal. See Section 4.5.1.2 for information on editing piston-cylinder module information manually.

© 2008 DH Instruments, a Fluke Company

원문: Fluke Calibration PG7601 메뉴얼(영문) · 제조사 원문 자료입니다. 사양은 제조사 사정에 따라 변경될 수 있습니다.

we measure, we calibrate, we validate.
㈜테솔 · www.tessol.com TS-TL-FLK-094 213 / 234
KOLAS 국제공인교정기관 · ISO/IEC 17025

TS-TL-FLK-094

7.3.3 CALIBRATION OF MASS SET

7.3.3.1 PREPARING FOR CALIBRATION

Piston gauge mass sets are often calibrated in a facility other than that in which the PG7601-AF system is used. In this case, calibrating the mass set requires packing the mass set and and shipping it. If the mass set and the piston-cylinder module are to be calibrated by the same facility, they are usually shipped together, with the PG7601-AF platform if necessary.

See Section 6.8.2.2 for mass set packing instructions.

7.3.3.2 UPDATING MASS SET DIGITAL ID

Mass set information is element specific metrological data. Uninformed or accidental altering of this information may lead to out of tolerance measurements. Mass set information should only be edited by qualified personnel as part of the PG7601-AF calibration or recalibration process.

Normally, the recalibrated PG7601-AF mass set is returned with a digital ID file (*.did) containing the critical calibration on the mass set and its masses. Use **CalTool for PG7000** software to view the digital ID file and load it into PG7601-AF platform memory. See Section 7.4 for detailed **CalTool for PG7000** software information.

The mass set information can also be updated from the PG7601-AF PG Terminal. See Sections 4.5.1.7 and 4.5.1.12 for information on editing mass set information manually.

7.3.4 CALIBRATION OF PISTON-CYLINDER MODULE TEMPERATURE SENSOR

7.3.4.1 OVERVIEW

The PG7601-AF platform uses a platinum resistance thermometer (PRT) embedded in the piston-cylinder mounting post to measure the temperature of piston-cylinder module.

The PRT is a 10052 4-pole type following DIN Norm 43760. The current supplied to the PRT is 1 mA and the slope of resistance relative to temperature over the valid temperature range of 0 to 40 °C is 0.3896 Ω/°C. See Section 1.1.2.2 for the PRT measurement specifications.

The ohmic measurement system in the PG7601-AF is self-calibrated using on-board 100 and 110 Ω reference resistors.

The normal calibration procedure of the PRT is to determine it's offset at ambient temperature relative to a reference. This can be done without removing the PRT from the PG7601-AF platform mounting post if a reference is available that can be inserted in the mounting post pressure bore. The PRT slope, over the limited range of use of 0 to 40 °C, can be considered a physical constant.

Once the offset is determined, it is entered into the PG7601-AF platform from the PG Terminal front panel (see Section 7.3.4.3).

If necessary, it is also possible to remove the PRT from the mounting post. To remove the PRT from the PG7601-AF mounting post, follow the instructions provided in Section 6.4.3.1.

원문: Fluke Calibration PG7601 메뉴얼(영문) · 제조사 원문 자료입니다. 사양은 제조사 사정에 따라 변경될 수 있습니다.

we measure, we calibrate, we validate.
㈜테솔 · www.tessol.com TS-TL-FLK-094 214 / 234
KOLAS 국제공인교정기관 · ISO/IEC 17025

TS-TL-FLK-094

7.3.4.2 PROCEDURE

Determining the offset of the PG7601-AF PRT relative to a reference requires a calibrated temperature probe of adequate uncertainty at ambient temperature (see Section 1.1.2.2) that can be inserted into the PG7601-AF mounting post pressure bore. The mounting post pressure bore is designed to receive a probe with the following characteristics: diameter 0.25 in., ± 0.005 in., sensing element length from tip of probe 1.2 in.

To determine the offset of the PG7601-AFPRT relative to a reference, proceed as follows:

❶ Remove the PG7601-AF piston-cylinder module (see Section 3.3.5).

❷ Press **[ESCAPE]** on the PG Terminal and then select **[SPECIAL]**, **<7cal>**, **<4PCT>**, **<1view>**. This provides a display of current mounting post PRT temperature reading, PRT resistance at 0ºC and PRT slope.

❸ Install the mounting post PRT insertion plug provided in the PG7601-BAS-AF accessories. This is an orange plug with a bore in it that aligns with the pressure bore in the piston-cylinder mounting post. The plug helps align and hold the reference PRT and isolates the top of the mounting post from ambient air helping to stabilize temperature.

❹ Insert the reference temperature probe (usually a PRT) in the pressure bore in the PG7601-AF mounting post (insert vertically, straight down from the top of the mounting post). The mounting post bore diameter is 6.5 mm (< 0.256 in.) to a depth of 35 mm (1.38 in.).

❺ Wait 60 minutes for temperature stabilization.

❻ Record the reading in ºC of the reference temperature probe and of the PG7601-AF proble (on PG Terminal) every 15 seconds for 5 minutes. If the test environment has a clear temperature cycle time, the 5 minutes should be increased to correspond with a temperature cycle of the environment.

❼ Evaluate the results of the readings. If total temperature change over the time of the test of either the reference or test PRT is greater than 0.05ºC, the temperature instability during the test is excessive and the measurements should be repeated until total temperature change over the time of the test is less than 0.05ºC.

7.3.4.3 CALCULATING AND UPDATING PISTON-CYLINDER TEMPERATURE SENSOR INFORMATION

⚠ *Piston-cylinder mounting post PRT information is element specific metrological data. Uninformed or accidental altering of this information may lead to out of tolerance measurements. Piston-cylinder module PRT information should only be edited by qualified personnel as part of the PG7601-AF calibration process.*

After performing the comparison process described in Section 7.3.4.2, the new PRT offset must be calculated and entered into PG7601-AF platform memory.

Calculating the new PRT offset

Calculate the new PRT offset as follows:

Using the data obtained in the comparison process described in Section 7.3.4.2, average the readings of the PG7601-AF PRT and average the readings of the reference temperature probe.

© 2008 DH Instruments, a Fluke Company

원문: Fluke Calibration PG7601 메뉴얼(영문) · 제조사 원문 자료입니다. 사양은 제조사 사정에 따라 변경될 수 있습니다.

we measure, we calibrate, we validate.
㈜테솔 · www.tessol.com TS-TL-FLK-094 215 / 234
KOLAS 국제공인교정기관 · ISO/IEC 17025

TS-TL-FLK-094

Calculate the difference between the two following:

PG7601-AF avg. temp. [ºC] – reference avg. temp. [ºC] = Δ avg. temp [ºC]

Calculate the resistance corresponding to Δ avg. temp using the slope of the PG7601-AF PRT following:

Δ avg. temp [ºC] x PRT slope [Ω/°C] = Δ resistance [Ω]

Calculate the new offset by adding the Δ resistance to the previous offset (the previous offset is the previous value of **<RZ>** in the PG7000 Terminal display):

previous offset [Ω] + Δ resistance [Ω] = new offset [Ω]

The new offset should be entered into the system following the procedure described below.

Updating piston-cylinder temperature sensor information

The offset value of the piston-cylinder mounting post platinum resistance thermometer may change from calibration to calibration. The new offset value determined above must be entered into the PG7601-AF platform memory so that it is used in its calculations.

To view the output of the piston-cylinder mounting post PRT, press **[SPECIAL]** and select **<4PCT>**, **<1view>** on the PG Terminal display. The display is:

1. Current reading of the piston-cylinder mounting post PRT converted to degrees Centigrade.
2. Indication that this is a piston-cylinder module temperature display.
3. Current value of the resistance slope relative to temperature.
4. Current value of the offset at 0 °C in ohm.

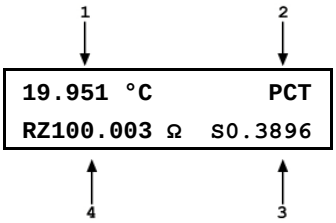

To adjust the values of **RZ** and/or **S**, press **[SPECIAL]** and select **<4PCT>**, **<2cal>** to access a screen in which the values of **RZ** and **S** can be edited. The slope value is normally considered a physical content and is not edited.

From there, press **[ESCAPE]** and select **<4PCT>**, **<1view>** to view the piston-cylinder module temperature reading with the edited calibration coefficients applied.

7.3.5 CALIBRATION OF RESIDUAL VACUUM GAUGE

7.3.5.1 OVERVIEW

The PG7601-AF platform is equipped with a thermal conductivity vacuum gauge used to measure the residual vacuum under the PG7601-AF's bell jar in absolute measurement mode. The vacuum gauge should be regularly calibratred.

The vacuum gauge is calibrated by comparison to a vacuum reference. The calibration is performed without removing the gauge from the PG7601-AF platform. The reference gauge vacuum is attached to the PG7601-AF platform KF25 vacuum port (see Figure XXX). The procedure requires that measurements be taken in static conditions, in which the reference and test vacuum gauges are isolated from the vcauum pump.

Once PG7601-AF vacuum gauge and reference vacuum gauge readings have been taken, the pressure adder (PA) and multiplier (PM) are edited in the PG7601-AF platform from the PG Terminal front panel to adjust the vacuum gauge as needed.

원문: Fluke Calibration PG7601 메뉴얼(영문) · 제조사 원문 자료입니다. 사양은 제조사 사정에 따라 변경될 수 있습니다.

we measure, we calibrate, we validate.
㈜테솔 · www.tessol.com TS-TL-FLK-094 216 / 234
KOLAS 국제공인교정기관 · ISO/IEC 17025

TS-TL-FLK-094

7.3.5.2 PROCEDURE

Calibrating the PG7601-AF vacuum gauge requires a reference vacuum gauge and hardware to connect it to the PG7601-AF KF25 reference vacuum shutoff valve (see Figure 1).

To compare the PG7601-AF vacuum gauge and a reference vacuum gauge, proceed as follows (refer to Figure 43):

❶ Allow all instrumentation to soak at laboratory temperature for at least 4 hours prior to calibration.

❷ Remove the PG7601-AF piston-cylinder module (see Section 3.3.5).

Close the PG7601-AF vacuum vent valve (see Figure 1).

Close the PG7601-AF platform shutoff valve (see Figure 1).

❸ Install a vacuum valve, valve 1 (see Figure 43), at the PG7601-AF KF25 vacuum port (valve 1 is provided with the PG7601-BAS-AF).

Install a KF25 tee at valve 1 (see Figure 43).

Install a vacuum valve, valve 2, at the end of the tee (see Figure 43) (valve 2 is NOT provided with the PG7601-BAS-AF).

Connect a reference vacuum gauge at the open leg of the tee. If the vacuum gauge has its own isolation valve, install the valve and gauge at the tee.

If the vacuum gauge will be zeroed prior to calibration, connect a vacuum pump suitable for zeroing the reference vacuum gauge at valve 2.

❹ Use **[SYSTEM]** on the PG Terminal to reach the SYSTEM screen which displays the current reading of the PG7601-AF vacuum gauge (see Section 4.3.5). The vacuum value can only be displayed in the unit of measure Pa (Pascal).

❺ With valves 1 and 2 open, turn on the vacuum pump and pull a vacuum until a pressure of 0.5 Pa (3.7 mTorr) is indicated by the reference vacuum gauge. If the reference vacuum gauge has its own isolation valve, view the pressure read by the PG7601-AF vacuum gauge and displayed on the PG Terminal to determine when vacuum is low enough to safely open the reference isolation valve.

Maintain vacuum at approximately 0.5 Pa for one hour to allow appropriate vacuum gauge warm up time and sufficient outgassing.

❻ If zeroing the reference vacuum gauge prior to calibration, close valve 1. Pull a vacuum of 0.7 mPa (5.0×10^{-6} Torr) or lower, as indicated by an ion or other low vacuum gauge, then zero the reference vacuum gauge.

Open valve 1 and allow pressure stabilize. If pressure as indicated by the reference vacuum gauge is greater than 1 Pa (7.4 mTorr), control pressure back to approximately 0.5 Pa (3.7 mTorr).

❼ Close valve 2.

In order to proceed with the calibration, the rate of increase of pressure when valve 2 is closed must be less than 0.1 Pa/second (0.75 mTorr/s). If the rate is too great, OPEN valve 2 and pull down longer to complete outgassing of system. After repeating this step, a rate greater than 0.1 Pa/second is indicative of a leak.

❽ Record simultaneous readings of the reference vacuum gauge and the PG7601-AF vacuum gauge as the pressure slowly drifts up through the range

© 2008 DH Instruments, a Fluke Company

원문: Fluke Calibration PG7601 메뉴얼(영문) · 제조사 원문 자료입니다. 사양은 제조사 사정에 따라 변경될 수 있습니다.

TS-TL-FLK-094

we measure, we calibrate, we validate.
㈜테솔 · www.tessol.com TS-TL-FLK-094 217 / 234
KOLAS 국제공인교정기관 · ISO/IEC 17025

in which the vacuum gauge is normally used. Take data points at approximately 1, 2, 3, 4, 5, 6 and 7 Pa.

❾ If the PG7601 vacuum gauge is out of tolerance, calculate the values of the vacuum gauge pressure adder (PA) and multiplier (PM) (see Section 7.3.5.3), enter them into the platform and validate the results by rerunning the procedure.

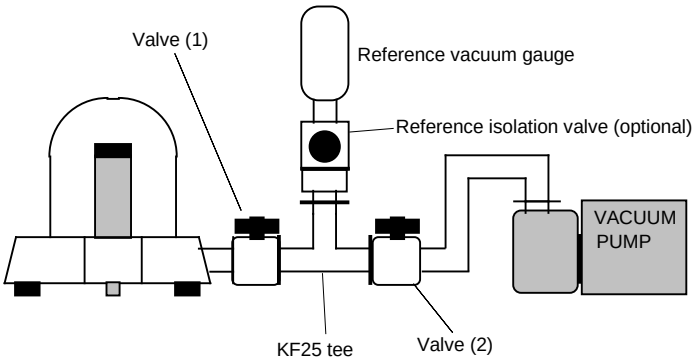

Figure 43. Vacuum gauge calibration setup

7.3.5.3 CALCULATING AND UPDATING VACUUM GAUGE CALIBRATION INFORMATION

PURPOSE

To view and adjust the output of the on-board vacuum gauge.

❍ **OPERATION**

To view the output of the vacuum gauge, press **[SPECIAL]**, **<7cal>**, **<6vac>**, **<1view>**. The display is:

1. Current reading of the vacuum gauge in Pascal. Reads **< >20 >** when the current reading is greater than 20 Pa.
2. Indication that this is a vacuum display.
3. Current value of the Pressure Multiplier applied to the vacuum gauge reading.
4. Current value of the Pressure Adder (always in Pascal [Pa]) applied to the vacuum gauge reading.

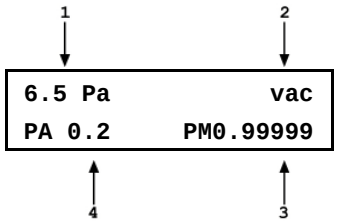

To adjust the values of PA and/or PM press **[SPECIAL]**, **<7cal>**, **<6vac>**, **<2cal>** to access a screen in which the values of PA and PM can be edited. From here, press **[ESCAPE]** and select **<6vac>**, **<1view>** to view the vacuum gauge reading with the edited calibration coefficients applied.

See Section 7.2.2 for an explanation of Adders and Multipliers and their use in adjusting internal sensors.

원문: Fluke Calibration PG7601 메뉴얼(영문) · 제조사 원문 자료입니다. 사양은 제조사 사정에 따라 변경될 수 있습니다.

7.4 MANAGING METROLOGICAL ELEMENT DIGITAL IDS WITH CALTOOL™ FOR PG7000 SOFTWARE

7.4.1 OVERVIEW

This manual provides an overview and basic operating instructions for CalTool for PG7000 software CalTool includes extensive on-line help. For more detailed information on CalTool for PG7000 features and operations, use the CalTool on-line help accessed by select the [Help] menu in the program.

PG7601-AF calculates the pressure defined by its floating piston using real time measurements of ambient and instruments conditions and piston-cylinder, mass set and mass loading bell (metrological element). The metrological element information is stored in PG7601-AF platform memory records called digital IDs.

Metrological element digital IDs may be created, deleted and edited from the PG Terminal front panel (see Section 4.5.1). They may also be managed more conveniently using **CalTool for PG7000** software.

CalTool for PG7000 software includes a digital ID database to keep records of piston-cylinder, mass set and mass bell (metrological element) digital IDs and archive records over time. The digital ID database is the central location for digital IDs where digital IDs should be stored and archived. CalTool also includes tools to retrieve and load digital IDs from and to the PG7601-AF platform. It also supports creating digital ID files (*.did) from the digital ID database and creating records in the digital ID database from the digital ID files. The digital ID file should be considered a temporary vehicle for the transfer of a current digital ID. There is normally only one digital ID file per metrological element which is the digital ID with that element's current calibration information. Digital ID files are not intended for storing or archiving digital IDs.

When a metrological element is delivered or recalibrated, in addition to the hard copy calibration report, a digital ID file (*.did) is provided. The digital ID file can be loaded directly to the PG7601-AF platform and/or stored in the digital ID database using **CalTool for PG7000** software.

To be used effectively, **CalTool for PG7000** must communicate remotely with the PG7601-AF platform. The computer running CalTool must have an RS232 or IEEE-488 interface available for communication with the PG7601-AF platform.

7.4.2 OPERATION

This manual provides an overview and basic operating instructions for CalTool for PG7000 software CalTool includes extensive on-line help. For more detailed information on CalTool for PG7000 features and operations, use the CalTool on-line help accessed by select the [Help] menu in the program.

© 2008 DH Instruments, a Fluke Company

원문: Fluke Calibration PG7601 메뉴얼(영문) · 제조사 원문 자료입니다. 사양은 제조사 사정에 따라 변경될 수 있습니다.

we measure, we calibrate, we validate.
㈜테솔 · www.tessol.com TS-TL-FLK-094 219 / 234
KOLAS 국제공인교정기관 · ISO/IEC 17025

TS-TL-FLK-094

7.4.2.1 GETTING STARTED

CalTool for PG7000 software is available for free download from DHI's web site, www.dhinstruments.com. It is also included on the Metrology Support Disk that is delivered with each piston-cylinder and mass set.

To get started with **CalTool for PG7000** software, proceed as follows:

❶ Install **CalTool for PG7000** software on a computer with an available RS232 or IEEE-488 interface that can be connected to the PG7601-AF platform.

❷ Connect the computer's RS232 (COM) or IEEE-488 interface to the **COM1** RS232 port or the **IEEE-488** connection on the PG7601-AF's rear panel (see Section 4.5.5).

❸ Run the **CalTool for PG7000** program.

❹ Press **[Setup]**, **[Options]**, **[Database]** on the main menu. Set the path for the desired location of the digital ID database. This is where records of digital IDs are stored.

Press **[Setup]**, **[Settings]**, **[File Directory]** on the main menu. Set the path for the desired location of the digital ID files. This sets the default location to which CalTool will write and from which it will attempt to retrieve digital ID files (*.did).

❺ Use the **<Interface>** drop down to select the interface on the computer running CalTool that will be used to communicate with the PG7601-AF platform.

If the interface selection is RS232, click on the COM settings window next to the **<RS232>** selection to set the computer's COM port settings. The baud rate, parity, data bits and stop bits settings must be exactly those of the PG7601-AF **COM1** port (see Section 4.5.5.1). The default PG7601-AF COM1 port settings are 2400, Even, 7, 1.

If the interface selection is IEEE-488, edit the IEEE-488 address if desired. The default IEEE-488 address of the PG7601-AF is 10.

❻ Press **[Load PG]** on the **<Digital IDs in PG7000>** panel. This should cause communication with the PG7601-AF platform and downloading of all digital IDs in the PG7601-AF platform to **CalTool for PG7000**. See the status bar at the bottom of the CalTool display for current program activity. Digital IDs of the **<Element Type>** found are displayed in the **<Digital IDs in PG7000>** list box. To view a different Element Type, use the **<Element Type>** drop down to select. If there are no digital IDs of the selected Element Type stored in the PG7601-AF platform, the list box is blank.

If CalTool is unable to establish communication with the PG7601-AF platform, an error message is displayed. Trouble shoot communications (see Section 4.5.5, **CalTool for PG7000** on-line help and information about your computer and its interface).

원문: Fluke Calibration PG7601 메뉴얼(영문) · 제조사 원문 자료입니다. 사양은 제조사 사정에 따라 변경될 수 있습니다.

we measure, we calibrate, we validate.
㈜테솔 · www.tessol.com TS-TL-FLK-094 220 / 234
KOLAS 국제공인교정기관 · ISO/IEC 17025

TS-TL-FLK-094

7.4.2.2 PROCESSING A NEW DIGITAL ID FILE (AFTER RECALIBRATION)

See Section 7.4.2.1. Getting Started before attempting to use this function.

When a PG7601-AF metrological element is new or has been recalibrated, in addition to the printed calibration report, a digital ID file (*.did) is provided. The new digital ID file is a very convenient way to update the digital ID in the PG7601-AF platform memory and the **CalTool for PG7000** database.

The recommended procedure for processing a new digital ID file is as follows:

❶ Use **[File Transfer]** or Windows tools to place a copy of the new digital ID file in the **CalTool for PG7000** digital ID file directory. Overwite existing *.did files with the same file name. Previous digital IDs should be saved by archiving in the metrological element recore in the **CalTool for PG7000** database, not in *.did files.

❷ In the **[Digital ID files]** list box, check the check boxes next to the new digital ID files.

❸ In the **[Digital ID files]** panel, press **[To Database]** to store the new digital ID files as records in the **CalTool for PG7000** database. If the digital ID files are for elements that have previously been stored in the database, Caltool automatically archives the old digital ID and makes the new current one in the digital ID record.

❹ In the **<Digital ID files>** panel, press **[To PG7000]** to store the new digital IDs in the PG7601-AF platform. Existing digital IDs for the same element type with the same serial number are updated.

7.4.2.3 STORING DIGITAL IDS FROM THE PG7601-AF IN THE CALTOOL DATABASE OR TO *.DID FILE

See Section 7.4.2.1. Getting Started before attempting to use this function.

To store digital IDs from the PG7601-AF to the CalTool database, proceed as follows:

❶ Press **[Load PG]** on the **<Digital IDs in PG7000>** panel. This should cause communication with the PG7601-AF platform and downloading of all digital IDs in the PG7601-AF platform to **CalTool for PG7000**. See the status bar at the bottom of the CalTool display for current program activity. Digital IDs of the **<Element Type>** indicated are displayed in the **<Digital IDs in PG7000>** list box.

❷ Use the **<Element Type>** drop down to select the type of metrological element to be stored.

❸ In the **<Digital IDs in PG7000>** list box, check the check boxes next to the digital IDs that are to be stored in the database.

In the **<Digital IDs in PG7000>** panel, press **[To Database]** to store the digital ID(s) in the PG7601-AF to the database or **[To File]** to create a *.did file.

© 2008 DH Instruments, a Fluke Company

원문: Fluke Calibration PG7601 메뉴얼(영문) · 제조사 원문 자료입니다. 사양은 제조사 사정에 따라 변경될 수 있습니다.

we measure, we calibrate, we validate.
KOLAS 국제공인교정기관 · ISO/IEC 17025

When a digital ID is written to the CalTool database from the PG7601-AF or from a *.did file, if no record for that element type and serial number exists, a new record is created. If a record already exists, the digital ID that is currently active for that record is archived in that record and the new one becomes the active one (see Section 7.4.2.4).

7.4.2.4 ARCHIVING DIGITAL IDS

See Section 7.4.2.1. Getting Started before attempting to use this function.

When a metrological element is recalibrated, a new calibration report with a new calibration report number and a new calibration report date is issued. At this time, a new digital ID file (*.did) is usually created and delivered along with the new calibration report. To keep the digital IDs stored in the PG7601-AF up to date, they must be replaced or modified. It may be desireable, however, to archive a copy of the digital ID that is being replaced.

Digital ID archiving is automatically supported by the **CalTool for PG7000** digital ID database. Any time a digital ID is written to the database for a metrological element that already has a record in the database (as identified by element serial number), the current digital ID is archived in the record and the new digital ID becomes the current digital ID.

To manage archived digital IDs, including viewing and deleting them, select the digital ID element for editing and then go to the **[Archive]** tab Digital ID Editor.

원문: Fluke Calibration PG7601 메뉴얼(영문) · 제조사 원문 자료입니다. 사양은 제조사 사정에 따라 변경될 수 있습니다.

we measure, we calibrate, we validate.
㈜테솔 · www.tessol.com TS-TL-FLK-094 222 / 234
KOLAS 국제공인교정기관 · ISO/IEC 17025

TS-TL-FLK-094

8. TROUBLESHOOTING

8.1 OVERVIEW

PG7601-SYS-AF is a sophisticated pressure pressure calibration system with advanced on-board features and functions. Before assuming that unexpected behavior is caused by a system defect or breakdown, the operator should use this manual and other training facilities to become thoroughly familiar with PG7601-SYS-AF operation. This troubleshooting guide is intended as an aid in identifying the cause of unexpected PG7601-SYS-AF behavior and determining whether the behavior is due to normal operation or an internal or external problem.

Identify the symptom or unexpected behavior you are observing from the **SYMPTOM** list below. A **PROBABLE CAUSE** is provided and a **SOLUTION** is proposed including references to manual sections that provide information that may be of assistance.

Table 43. Troubleshooting checklist

SYMPTOM	PROBABLE CAUSE	SOLUTION
Will NOT power up.	Blown fuse.	Replace fuse in PG7601-AF Terminal.
Front panel keys seem to be disabled.	"REMOTE" command has been sent from a host computer.	Send "LOCAL" command from host computer or cycle PG7601-AF power. 5.3.4.2
Front panel display is dim.	Screen saver option has been activated.	Press any key to resume full screen power, adjust activation time if desired. 4.5.3.2
Keypad presses make undesired sounds or no sounds.	Keypad sound settings are incorrect.	Use sounds function to set keypad sounds as desired. 4.5.4.2
Cannot access certain functions. Display shows: <ACCESS RESTRICTED>.	User Level setting restricts access to those functions.	Change User Level or consult system manager. 4.5.4.5
Cannot establish communication over interface.	Computer and/or PG7601-AF interface not correctly configured; incorrect or bad interface cable.	Check and correct interface configurations and cables if necessary. Run COM port test. 4.5.5, 4.5.5.3, 5.2
Displays <FATAL ERROR> or <FATAL FAULT>.	Encountered unresolved internal software conflict.	Cycle power to clear. Please record conditions leading up to the event, including the numbers displayed when enter is pressed and report the information to a DHI Authorized Service Provider.
Display <TOUT> or <TIME-OUT>.	PG7601-AF is having a communications problem with the PPC3-7M-AF pressure controller.	Check setup and communications with PPC3-7M-AF pressure controller. 4.5.5.4
Displays <******> or <OVERFLOW> where a numerical value should be.	Number to be displayed is too large for allocated space. Usually due to an erroneous setting or measurement causing an out of limit high value to be calculated.	Check settings that may be causing an out of limit high measurement and adjust if necessary. 4.3.3
The PG Terminal constantly displays <Searching …. >.	The PG Terminal is unable to establish communications with the PG7601-AF platform.	Check that the PG Terminal to platform cable is installed correctly. If still unable to get beyond <Searching …. >, contact a DHI Authorized Service Provider. 2.1
The run screen is not the normal MAIN run screen.	You are in the SYSTEM or AMBIENT run screen.	Operation is normal. Press [ESCAPE] to go to MAIN run scrren. 4.2.1.3

© 2008 DH Instruments, a Fluke Company

원문: Fluke Calibration PG7601 메뉴얼(영문) · 제조사 원문 자료입니다. 사양은 제조사 사정에 따라 변경될 수 있습니다.

we measure, we calibrate, we validate.
㈜테솔 · www.tessol.com TS-TL-FLK-094 223 / 234
KOLAS 국제공인교정기관 · ISO/IEC 17025

TESSOL Technical Library
TS-TL-FLK-094

SYMPTOM	PROBABLE CAUSE	SOLUTION
Displays of ambient conditions values are not accurate.	The reference to which the ambient condition values are being compared is not accurate or the specifications of the ambient conditions sensors are not being evaluated correctly.	Check the specifications and operation of the reference being used for ambient conditions. Consider the specifications of the ambient conditions measurements. 1.1.2.2
Piston drop rate is excessive.	There is a leak in the pressurized system or the device under test itself.	Correct leak.
Piston rotation slows down too quickly, motorized rotation engages too often.	Piston-cylinder is dirty and needs to be cleaned.	Clean piston-cylinder. Attempt to identify and elminate source of piston-cylinder contamination. 6.3.2
	Piston position detection is out of adjustment is piston is in spring zone, not floating freely.	Adjust piston position detection. 6.4.1
	PG7601-AF platform is not level so piston may not be well centered in the cylinder.	Level PG7601-AF platform.
	PG7601-AF subject to exessive vibration.	Remove souce of vibration. Make sure reference vacuum pump is not touching the bench on which the PG7601-AF is installed.
Motorized rotation will not engage.	Measurement mode is absolute by vacuum and reference vacuum is not under *Ready* limit.	Wait for vacuum to reach *Ready* limit (5 Pa by default). Correct situation that is causing vacuum *Ready* limit not to be reached. 4.1.3.3, 4.3.13, 4.3.8
Automated motorized rotation is not operating.	Automated motorized rotation is OFF.	Press [ROTATE]. 4.3.8
Motorized rotation unable to start piston rotation.	Piston-cylinder dirty.	Clean piston-cylinder. 6.3.2
Automated motorized rotation is not engaging even though rotation rate is less than minimum *Ready* rotation rate.	Current mass load is under cutoff (3 kg) and lower limit is always 5 rpm under cutoff.	Operation is normal. 4.1.3.2
Automated pressure control (GEN) is not starting after setting a target and loading mass AND measurement mode is absolute by vacuum.	In absolute by vacuum measurement mode, the reference vacuum must be below 20 Pa for automated pressure generation to begin.	Wait for vacuum to reach less than 20 Pa, check and correct vacuum supply if inadequate.
Automated pressure control is not increasing or decreasing pressure as expected.	Pressure or vacuum supply to the PPC3-7M-AF is not adequate.	Provide correct pressure and vacuum supplies to pressure controller. 3.3.7, 0
Automated pressure control is operating very poorly.	PPC3-7M-AF pressure controller **EXHAUST** port reference is set incorrect.	Use **[SPECIAL]**, **<7internal>**, **<2ControlRef>** to set the control reference to **<1auto>**. PPC3 Operation and Maintenance Manual
The mass value loading instruction resulting from a pressure entry and the mass value displayed in the MAIN run screen are not the same.	Mass entries are in nominal mass and MAIN run screen displays actual mass.	Operation is normal. Familiarize yourself with PG7601-AF mass protocol. 4.1.5
The resolution of mass loading instructions doesn't seem correct.	The mass loading resolution setting is incorrect.	Use **[RES]** to set mass loading resolution as desired. 4.3.9.6
Piston position readings seem incorrect.	Piston position reading system needs to be adjusted; mass bell is not loaded so piston position indication is not operating.	Adjust piston position measurement system, load mass bell. 6.4.1
Pressure defined by PG7601-AF is grossly incorrect.	Active piston-cylinder module and/or mass set are not those that are in use, the correct mass value is not loaded.	Select correct piston-cylinder module and mass set, check mass load accounting. 0, 4.5.1.10, 4.1.5
	Mass load is incorrect due to not following mass loading protocol or mass accounting error.	Check mass load and mass accounting. 4.1.5
Pressure defined by PG7601-AF is incorrect by roughly 100 kPa (14.2 psi).	PG7601-AF is in absolute measurement mode when it should be in gauge measurement mode or vice-versa.	Use **[MODE]** to select correct measurement mode. 4.3.4

© 2008 DH Instruments, a Fluke Company

원문: Fluke Calibration PG7601 메뉴얼(영문) · 제조사 원문 자료입니다. 사양은 제조사 사정에 따라 변경될 수 있습니다.

SYMPTOM	PROBABLE CAUSE	SOLUTION
Pressure defined by PG7601-AF is incorrect by relatively small amounts.	A pressure head is applied incorrectly or inadvertently.	Check and correct if necessary. 4.3.7, 4.5.3
	The value of local gravity used by the SETUP file is incorrect.	Check and correct if necessary. 4.5.6, 4.4, 4.1.1
	The PG7601-AF platform is not level.	Check and correct if necessary. 3.3.1
	Information in the piston-cylinder module and/or mass set digital ID is incorrect.	Check and correct if necessary. 4.5.1
Pressure defined by PG7601-AF is incorrect.	Piston is against spring zone although piston position indicates it is floating freely.	Adjust piston position measurement system. 6.4.1
When using automated pressure control pressure generation stopped and the controller is beeping.	Pressure reached PPC3-7M-AF pressure controller's UPPER LIMIT.	Check **[GEN]** UPPER LIMIT and adjust if desired. 6.54.3.9.3
Automated pressure generation is overshooting the pressure at which the piston floats.	The PPC3-7M-AF pressure controller TOLERANCE function setting is too small.	Adjust the tolerance setting. 4.3.9.4
	The PPC3-7M-AF pressure conroller utility sensor needs to be calibrated.	Calibrate the PPC3-7M-AF utility sensor. 6.5
Automated pressure generation is extremely slow or never floats the pistons.	The test volume is too large.	Reduce the test volume and/or, if possible, make the tolerance setting smaller. 4.3.9.4
	The PPC3-7M-AF pressure conroller utility sensor needs to be calibrated.	Calibrate the PPC3-7M-AF utility sensor. 6.5
The piston deceleration function starts immediately when **[ENTER/SET P]** is pressed.	Operation is normal but can be modified so that deceleration does not occur if it is not needed.	Turn OFF the PRE-DECEL function. 4.3.8.1

 © 2008 DH Instruments, a Fluke Company

원문: Fluke Calibration PG7601 메뉴얼(영문) · 제조사 원문 자료입니다. 사양은 제조사 사정에 따라 변경될 수 있습니다.

NOTES

원문: Fluke Calibration PG7601 메뉴얼(영문) · 제조사 원문 자료입니다. 사양은 제조사 사정에 따라 변경될 수 있습니다.

9. APPENDIX

9.1 CONVERSION OF NUMERICAL VALUES

PG7601-AF performs all internal calculations in SI units. Numerical values input or output in other units are converted to SI immediately after entry and back to other units just before output as needed.

9.1.1 PRESSURE

Table 44. Pressure unit of measure conversions

TO CONVERT FROM PA TO		MULTIPLY BY
Pa	Pascal	1.0
bar	Bar	1.0 E-05
ft	feet of altitude	see **Altitude Note** below
hPa	hecto	1.0 E-02
inHg @ 0°C	inch of mercury	2.953 E-04
inWa @ 4°C	inch of water	4.014649 E-03
inWa @ 20°C	inch of water	4.021732 E-03
inWa @ 60°F	inch of water	4.018429 E-03
kcm^2	kilogram force per centimeter square	1.019716 E-05
kPa	kilo Pascal	1.0 E-03
m	meters of altitude	see **Altitude Note** below
mbar	millibar	1.0 E-02
mmWa @ 4°C	millimeter of water	1.019716 E-01
mmHg @ 0°C	millimeter of mercury	7.50063 E-03
MPa	Mega Pascal	1.0 E-06
mTor	milli Torr (micron Hg @ 0°C)	7.50063
psf	pound per square foot	1.007206 E-06
psi	pound per square inch	1.450377 E-04
Torr	Torr (mmHg @ 0°C)	7.50063 E-03
user	User	User defined coefficient

Altitude Note: Quantities expressed in units of altitude follow MIL-STD-859A "Static Pressure, p, in Inches of Mercury for Values of Pressure Altitude, H, in Geopotential Feet." MIL-STD-859A provides tables of pressure in inches of mercury as a function of altitude in feet. PG7601-AF uses a set of equations to model the pressure/altitude relationship. The worst case deviation between the MIL-STD-859A table and the calculated pressure is 0.0001 inches of mercury (0.3 Pa). The pressure quantity expressed in inches of mercury is converted to Pascal following Table 44 above. For altitude expressed in meters, meters are converted to feet using 1 m = 3.28084 ft.

9.2 DEFINED PRESSURE CALCULATIONS

Sections 9.2.1 and 9.2.2 document the calculations used by PG7601-AF piston gauges to obtain the defined pressure.

© 2008 DH Instruments, a Fluke Company

원문: Fluke Calibration PG7601 메뉴얼(영문) · 제조사 원문 자료입니다. 사양은 제조사 사정에 따라 변경될 수 있습니다.

TESSOL Technical Library
TS-TL-FLK-094
we measure, we calibrate, we validate.
㈜테솔 · www.tessol.com TS-TL-FLK-094 227 / 234
KOLAS 국제공인교정기관 · ISO/IEC 17025

Table 45 defines the pressure calculation variables used in Sections 9.2.1 and 9.2.2.

Table 45. Defined pressure calculation variables

VARIABLE	DEFINITION	UNITS	SOURCE OF VALUE
$\sqrt{A_{\theta,P}/\pi}$	Piston radius at temperature θ and pressure P	m	Calculated.
$A_{20,0}$	Piston effective area at 20°C, P_{atm}	mm^2	Piston-cylinder module digital ID (4.5.1).
$A_{\theta,P}$	Piston effective area at temperature θ, pressure P	m^2	Calculated from $A_{20,0}$ in piston-cylinder module digital ID (4.5.1.1).
G	Local gravity	m/s^2	Local, standard or user as specified in current SETUP file (4.4).
K_N	Nominal mass to pressure conversion coefficient for a given piston-cylinder size	Pa/kg	Calculated from $A_{20,0}$ and standard conditions.
M	Mass load	kg	Current mass loading instruction (4.1.5, 4.3.11).
P_A	Absolute pressure	Paa	Calculated.
P_{atm}	Atmospheric (ambient) pressure	Paa	Internal measurement, user entered value or standard as specified by SETUP file (4.4).
P_G	Gauge pressure	Pa	Calculated.
P_{HA}	Fluid head correction in absolute mode	Pa	Calculated using device heights and medium (9.2.2.2, 4.3.7, 4.5.3).
P_{HG}	Fluid head correction in gauge mode	Pa	Calculated using device heights and medium (9.2.2.2, 4.3.7, 4.5.3).
P_{nom}	Nominal pressure	Pa	In pressure to mass mode $P_{nom}=P_{req}$ In mass to pressure mode $P_{nom}=M \cdot K_N$
P_{RPM}	Current static pressure reading from reference pressure monitor	Paa	Read automatically from external atm P source specified by SETUP file. Used in PG7601-AF differential mode only (4.4).
ΔP_D	Differential pressure	Pa	Calculated. PG7601-AF differential mode only.
Γ	Surface tension coefficient	N/m	Piston-cylinder module digital ID (4.5.1.1).
α_C	Cylinder linear thermal expansion coefficient	$°C^{-1}$	Piston-cylinder module digital ID (4.5.1.1).
α_P	Piston linear thermal expansion coefficient	$°C^{-1}$	Piston-cylinder module digital ID (4.5.1.1).
λ	Piston-cylinder pressure coefficient	Pa^{-1}	Piston-cylinder module digital ID (4.5.1.1).
θ	Temperature of piston-cylinder	°C	Internal measurement, user entered value or standard as specified by SETUP file (4.4).
ρ_a	Air density	kg/m^3	Calculated from standard air density corrected for actual atmospheric pressure, ambient temperature and relative humidity (atm p, humidity and temp source are specified by SETUP file) (4.4).
ρ_m	Mass density	kg/m^3	Mass set digital ID (4.5.1.6, 4.5.1.11).

원문: Fluke Calibration PG7601 메뉴얼(영문) · 제조사 원문 자료입니다. 사양은 제조사 사정에 따라 변경될 수 있습니다.

9.2.1 PG7601-AF

PG7601-AF performs pressure to mass and mass to pressure calculations as follows:

- Gauge mode:

$$P_G = \frac{Mg\left(1-\frac{\rho_a}{\rho_m}\right)+2\pi\Gamma\sqrt{\frac{A_{\theta,P}}{\pi}}}{A_{\theta,P}} + P_{HG}$$

$$A_{\theta,P} = A_{20,0}\cdot 10^{-6}\cdot\left[1+(\theta-20)(\alpha_P+\alpha_C)\right](1+\lambda P_{nom})$$

- Absolute pressure by adding atmospheric pressure:

$$P_A = \frac{Mg\left(1-\frac{\rho_a}{\rho_m}\right)+2\pi\Gamma\sqrt{\frac{A_{\theta,P}}{\pi}}}{A_{\theta,P}} + P_{HA} + P_{atm}$$

$$A_{\theta,P} = A_{20,0}\cdot 10^{-6}\cdot\left[1+(\theta-20)(\alpha_P+\alpha_C)\right](1+\lambda P_{nom})$$

- Absolute pressure with vacuum reference:

$$P_A = \frac{Mg+2\pi\Gamma\sqrt{\frac{A_{\theta,P}}{\pi}}}{A_{\theta,P}} + P_{HA} + P_{vac}$$

$$A_{\theta,P} = A_{20,0}\cdot 10^{-6}\cdot\left[1+(\theta-20)(\alpha_P+\alpha_C)\right](1+\lambda P_{nom})$$

9.2.2 FLUID HEADS

9.2.2.1 FLUID HEAD COMPONENTS

PG7601-AF supports three different fluid head components (see Sections 4.5.3, 4.3.7): DUT head, ATM head and Piston head. The three components are combined to create the overall head correction for each PG7601-AF measurement mode (see Section 9.2.2.2).

DUT head: Calculates and applies a fluid head correction to predict the defined pressure at a level other than the PG7601-AF's reference level (see Section 4.3.7).

The DUT head is calculated following:

$$P_{H_{DUT}} = (\rho_f - \rho_a) g h_D$$

Where:

$P_{H_{DUT}}$, DUT head [Pa]	=	fluid head correction applied to the defined pressure calculated at the PG7601-AF reference level.
ρ_f, fluid density [kg/m^3]	=	density of the pressurized medium (oil density = 916 kg/m^3, water density = 998.2321 kg/m^3, gas densities are calculated for N_2, He or air dependent on current pressure and temperature).

© 2008 DH Instruments, a Fluke Company

원문: Fluke Calibration PG7601 메뉴얼(영문) · 제조사 원문 자료입니다. 사양은 제조사 사정에 따라 변경될 수 있습니다.

we measure, we calibrate, we validate.
㈜테솔 · www.tessol.com TS-TL-FLK-094 229 / 234
KOLAS 국제공인교정기관 · ISO/IEC 17025

TS-TL-FLK-094

ρ_a, air density [kg/m^3]	=	density of ambient air calculated using current ambient pressure, temperature and relative humidity (values as specified in the active SETUP file, see Section 4.4). Assumed to be zero when operating in absolute with a vacuum reference mode.
g, gravity [m/s^2]	=	acceleration due to gravity (value as specified in the active SETUP file, see Section 4.4).
h_D, DUT height [m]	=	Height of DUT above PG7601-AF reference level. Value is negative if below reference level.

ATM head: Calculates and applies a fluid head correction to internal or external barometer readings to correct the atmospheric pressure value to the PG7601-AF's reference level if the barometer is reading at a different level (see Section 4.5.3, 4.5.3.3).

The ATM head is calculated following:

$$P_{H_{atm}} = \rho_{as} g h_B$$

Where:

$P_{H_{atm}}$, ATM head [Pa]	=	fluid head correction applied to the internal or external barometer reading.
ρ_{as}, air density [kg/m^3]	=	standard air density of 1.2 kg/m^3.
g, gravity [m/s^2]	=	acceleration due to gravity (value as specified in the active SETUP file, see Section 4.4).
h_B, barometer height [m]	=	Height of the internal or external barometer above the PG7601-AF reference level. Value is negative if below reference level.

PISTON head: Calculates and applies a fluid head correction to compensate for the difference between the current piston position and the PG7601-AF's reference level (see Section 4.5.3, 4.5.3.4).

The DUT head is calculated following:

$$P_{H_P} = (\rho_f - \rho_a) g h_P$$

Where:

P_{H_P}, Piston head [Pa]	=	fluid head correction applied to calculate defined pressure.
ρ_f, fluid density [kg/m^3]	=	Density of test fluid at current pressure.
ρ_a, air density [kg/m^3]	=	density of ambient air calculated using current ambient pressure, temperature and relative humidity (values as specified in the active SETUP file, see Section 4.4). Assumed to be zero when operating in absolute with a vacuum reference mode. Calculated using static pressure density measured by RPM in PG7601-AF differential mode.
g, gravity [m/s^2]	=	acceleration due to gravity (value as specified in the active SETUP file, see Section 4.4).
h_P, piston height [m]	=	Height of the current piston position above PG7601-AF reference level.

원문: Fluke Calibration PG7601 메뉴얼(영문) · 제조사 원문 자료입니다. 사양은 제조사 사정에 따라 변경될 수 있습니다.

TS-TL-FLK-094

we measure, we calibrate, we validate.
KOLAS 국제공인교정기관 · ISO/IEC 17025

9.2.2.2 OVERALL FLUID HEAD CORRECTION

The overall fluid head correction for each PG7601-AF mode results from combining the three head components. In general, overall head correction is given by:

$$P_H = -P_{H_{DUT}} - P_{H_{atm}} + P_{H_P}$$

Gauge mode:

$$P_{HG} = -(\rho_f - \rho_a)gh_D + (\rho_f - \rho_a)gh_P$$

Absolute mode by adding atmospheric pressure: Air density is zero for all components except for the ATM head which is used to compensate for barometer height.

$$P_{HA} = -\rho_f gh_D - \rho_{as} gh_B + \rho_f gh_P$$

Absolute mode with vacuum reference: Air density is zero for all terms and no barometer is used.

$$P_{HA} = -\rho_f gh_D + \rho_f gh_P$$

9.3 GLOSSARY

Absolute	As in absolute pressure. Pressure expressed relative to vacuum.
Absolute by vacuum, *avac*	Absolute pressure determined by defining pressure relative to vacuum in an evacuated bell jar.
Absolute by atmosphere, *aatm*	Absolute pressure determined by adding atmospheric pressure to gauge pressure.
Adder	A value added to internal sensor readings to offset the readings (pressure adder, temperature adder, humidity adder) for calibration adjustment.
Ae	Piston-cylinder effective area.
AMH	Optional automated mass handling system.
ATM head	Pressure head correction to the barometer measurement to take into consideration the difference between the actual barometer level and the PG7601-AF reference level.
AutoZero or AutoZ	A process by which a the utility sensor in the PPC3-7M-AF pressure controller can be rezeroed (offset) relative to a standard (see PPC3 Opeation and Maintenance Manual).
CalTool for PG7000	Utility computer program used to manage PG7601-AF digita IDs (piston-cylinder, mass set and mass bell information digitial identification records).
Crossfloat	Process of comparison of two piston cylinders in which they are connected together under pressure and the mass of one is adjusted so that both pistons float together at a common pressure. Used to set the line pressure in high line differential measurement mode.
Control vacuum	Vacuum supply used by a pressure control to set and adjust pressure.
Digital identification (Digital ID or DID)	A data set of all the variables needed to define a PG7601-AF piston gauge metrological element. Metrological elements include piston gauge platforms, piston-cylinder modules, mass sets and mass bells. Digital IDs are loaded into the PG7601-AF platform to provide the information needed to calculate measured pressure and other values when using specific metrological elements.
DUT (Device Under Test)	The device being tested or calibrated.
DUT head	Fluid head correction to the pressure defined by PG7601-AF to predict the pressure at the level of the DUT, which may be different from the PG7601-AF reference level.
FS (Full Scale)	The full scale value is the maximum value or the span of a measurement range. Limits and specifications are often expressed as % FS.
g, gl	Acceleration due to gravity (g). Acceleration due to gravity at location of use (gl).
Gauge	As in gauge pressure. Pressure expressed relative to atmospheric pressure.

© 2008 DH Instruments, a Fluke Company

원문: Fluke Calibration PG7601 메뉴얼(영문) · 제조사 원문 자료입니다. 사양은 제조사 사정에 따라 변경될 수 있습니다.

TS-TL-FLK-094

we measure, we calibrate, we validate.
㈜테솔 · www.tessol.com TS-TL-FLK-094 231 / 234
KOLAS 국제공인교정기관 · ISO/IEC 17025

He	Helium gas.
Head	Fluid head, a pressure difference due to a difference in height. See also ATM head, DUT head and PISTON head.
HSTOP, LSTOP	High stop and low stop, piston maximum end of stroke positions.
InHg	Pressure unit of measure, inches of mercury.
InWa	Pressure unit of measure, inches of water.
kcm^2	Pressure unit of measure, kilogram per centimeter square.
Line pressure	Pressure on the low side in high line differential pressure measurement mode. Pressure relative to which the differential pressure is defined.
Measurement mode	Mode in which PG7601-AF is defining pressures. These include gauge (pressure relative to atmospheric pressure), absolute by atmosphere (pressure relative to vacuum determined by adding atmospheric pressure to gauge pressure), absolute by vacuum (pressure relative to absolute vacuum determined by establishing a vacuum around the mass load), differential (pressure relative to atmospheric or another static pressure determined by subtracting the static pressure from absolute by vacuum).
MS (mass set)	A group of masses composed for use with a PG7601-AF piston gauge.
Mass bell	The sleeve loaded onto the piston to carry other masses.
Mass entry mode (mass to pressure)	Operating mode in which the user enters the mass loaded on the piston and the PG7601-AF calculates the defined pressure. See also Pressure Entry Mode.
Medium, pressurized	The pressurized fluid.
Multiplier	A value by which internal sensor readings are multiplied to change their slope (pressure multiplier, temperature multiplier, humidity multiplier) for calibration adjustment.
N2	Nitrogen gas.
Nominal mass	The mass loaded on the piston in terms of the nominal values written on the individual masses. See also true mass.
Normal	A conventional or standard value.
PA	Pressure adder, used to offset a sensor or barometer to calibrate it.
PC	Piston-cylinder, piston-cylinder module.
PM	Pressure multiplier, used to a sensor or barometer to calibrate it.
PG7601-BAS-AF	Refers to the “basic system” which includes the complete gas piston gauge calibration system except the piston-cylinder modules and mass set. This is a line item in the US Air Force gas piston gauge contract.
PG7601-EXC-AF	Refers to the “exchange package” which is the three different size piston-cylinder modules, the mass set and transit cases for shipping them. This is a line item in the US Air Force gas piston gauge contract.
PG7601-SYS-AF	Refers to the complete, operational PG7601-AF system including the “basic system” (PG7601-BAS-AF) and the “exchange package” (PG7601-EXC-AF).
Pressure entry mode (pressure to mass)	Operating mode in which the user enters the pressure to be defined and PG7601-AF calculates the mass to load. See also Mass entry mode.
PISTON head	Fluid head correction based on the difference between the piston’s current position and the reference level.
PRT	Platinum Resistance Thermometer. The element used in the piston-cylinder mounting post to measure temperature.
Ready/Not Ready	Indication of when conditions are present to make in tolerance pressure definitions based on specific criteria for each condition.
Reference level	Height at which pressures are defined. PG7601-AF defines pressures at its reference level. Fluid head corrections correct the pressure relative to the reference level.
Reference vacuum	Vacuum under the PG7601-AF bell jar. Residual pressure against which absolute by vacuum measurements are made.
SETUP file	File specifying the source of values for the variables used by PG7601-AF to calculate defined pressure.
True mass	The actual mass loaded on the piston using the measured value of each mass. See also Nominal Mass.
User level	Level of security that can be set to limit access to certain PG7601-AF functions

© 2008 DH Instruments, a Fluke Company

원문: Fluke Calibration PG7601 메뉴얼(영문) · 제조사 원문 자료입니다. 사양은 제조사 사정에 따라 변경될 수 있습니다.

Utility sensor	The internal transducer in the PPC3-7M-AF pressure controller. A utility sensor is a low precision pressure transducer used for pressure indication, safety and housekeeping functions, not for low uncertainty measurement.

9.4 WARRANTY STATEMENT

Except to the extent limited or otherwise provided herein, **DH Instruments, a Fluke Company** (**DHI**) warrants for one year from purchase, each new product sold by it or one of its authorized distributors, only against defects in workmanship and/or materials under normal service and use. Products which have been changed or altered in any manner from their original design, or which are improperly or defectively installed, serviced or used are not covered by this warranty.

DHI and any of its Authorized Service Providers' obligations with respect to this warranty are limited to the repair or replacement of defective products after their inspection and verification of such defects. All products to be considered for repair or replacement are to be returned to **DHI**, or its Authorized Service Provider, freight prepaid, after receiving authorization from **DHI** or its Authorized Service Provider. The buyer assumes all liability vis-à-vis third parties in respect of its acts or omissions involving use of the products. In no event shall **DHI** be liable to purchaser for any unforeseeable or indirect damage, it being expressly stated that, for the purpose of this warranty, such indirect damage includes, but is not limited to, loss of production, profits, revenue, or goodwill, even if **DHI** has been advised of the possibility thereof, and regardless of whether such products are used individually or as components in other products.

Items returned to **DHI** under warranty claim but determined to not have a defect covered under warranty or to not have a defect at all are subject to an evaluation and shipping charge as well as applicable repair and/or calibration costs.

The provisions of this warranty and limitation may not be modified in any respect except in writing signed by a duly authorized officer of **DHI.**

The above warranty and the obligations and liability of **DHI** and its authorized service providers exclude any other warranties or liabilities of any kind.

Table 46. DHI Authorized Service Providers

DH INSTRUMENTS, A FLUKE COMPANY AUTHORIZED SERVICE PROVIDERS			
COMPANY	**ADDRESS**	**TELEPHONE, FAX & EMAIL**	**NORMAL SUPPORT REGION**
DH Instruments, a Fluke Company	4765 East Beautiful Lane Phoenix AZ 85044-5318 USA	Tel 602.431.9100 Fax 602.431.9559 cal.repair@dhinstruments.com	Worldwide
Minerva Meettechniek B.V.	Chrysantstraat 1 3812 WX Amersfoort the NETHERLANDS	Tel (+31) 33.46.22.000 Fax (+31) 33.46.22.218 info@minervaipm.com	European Union
Nippon CalService, Inc.	2-9-1 Sengen, Tsukuba-Shi Ibaraki Prefecture 305 JAPAN	Tel 0298-55-8778 Fax 0298-55-8700 tohte@ohtegiken.co.jp	Japan/Asia

© 2008 DH Instruments, a Fluke Company

원문: Fluke Calibration PG7601 메뉴얼(영문) · 제조사 원문 자료입니다. 사양은 제조사 사정에 따라 변경될 수 있습니다.

we measure, we calibrate, we validate.
㈜테솔 · www.tessol.com TS-TL-FLK-094 233 / 234
KOLAS 국제공인교정기관 · ISO/IEC 17025

TS-TL-FLK-094

NOTES

원문: Fluke Calibration PG7601 메뉴얼(영문) · 제조사 원문 자료입니다. 사양은 제조사 사정에 따라 변경될 수 있습니다.