ASL SERIES
394000026 Rev 2

ASL SERIES
Linear Adjustment Setpoint Switches

Features Patented Linear Setpoint Adjustment
US Patent 9766273





The ASL Series Current Sensing Switches provide a current operated solid-state contact powered from the monitored circuit. The trip point adjustment uses a single turn potentiometer. By turning the adjustment arrow to the current magnitude needed, the installer can set the point where the output changes state when the monitored circuit is not energized. With the split-core case option, installation is just a matter of placing the sensor over the conductor. It couldn't be easier.

Current Sensing Switch Applications

AC Motor Loads
- Set a normally open contact over the normal running current level and it will open if the drive belt breaks or comes off the sheaves.
- Set a normally closed contact below the normal run current level and it will open on overload conditions.
- Monitor up to 150 A loads.

Critical Lighting Loads
- Monitor security lighting and water navigational indicators.

Heating Loads
- Receive independent verification that an element is working properly.
- Monitor drying and curing processes remotely.

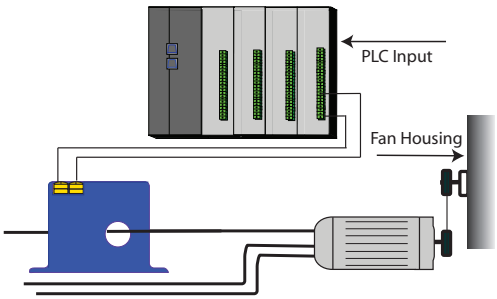

Motor current causes the solid-state contact to close, and if the coupling or drive belt breaks, the current falls and the sensor output opens again.

Current Sensing Switch Features

Easily Established Contact Actuation Point
- Patented potentiometer setpoint selection.
- Trip point indicated on the labeling.
- Trip point can be set without energizing the monitored load, adding a large measure of safety.
- Two-second delay before contact action upon initial energization allows the output to ignore motor inrush current.

Isolation
- Output is magnetically isolated from the input for safety.
- Eliminates insertion losses, no added burden.

Solid-state Reliability
- No moving components for switching.
- No need for periodic maintenance or calibration.

Panel Mounted Solid- or Split-core Case
- Split-core case allows installation without disturbing existing wiring and can be mounted in any position. Either case can be attached to a panel, hung on the conductor or on a DIN rail adapter (included).*
- Both solid- or split-core cases provide windows large enough for 150 A loads, non-contact design provides complete isolation between monitored load and control circuitry.

No External Power Needed
- Sensor is powered from the monitored AC circuit.
- Choose normally open (closing on current increase) or normally closed (opening on current increase).
- Fast action contact reacts quicker than RTD, thermocouples, or bimetallic thermal elements.

UL/cUL and CE Approved
- Accepted worldwide.

*For information on the DIN rail accessories kit, see page 147.

OEMs Test & Evaluation Units for OEMs
Free program expedites evaluation process. See page 3 for details.

NK Technologies
3511 Charter Park Drive • San Jose, CA 95136
800.959.4014 • www.nktechnologies.com • sales@nktechnologies.com

FIVE YEAR 5 WARRANTY RoHS Compliant

원문: NK Technologies ASL 시리즈 카탈로그(영문) · 제조사 원문 자료입니다. 사양은 제조사 사정에 따라 변경될 수 있습니다.

ASL SERIES
394000026 Rev 2

Current Sensing Switch Dimensions

FF Case

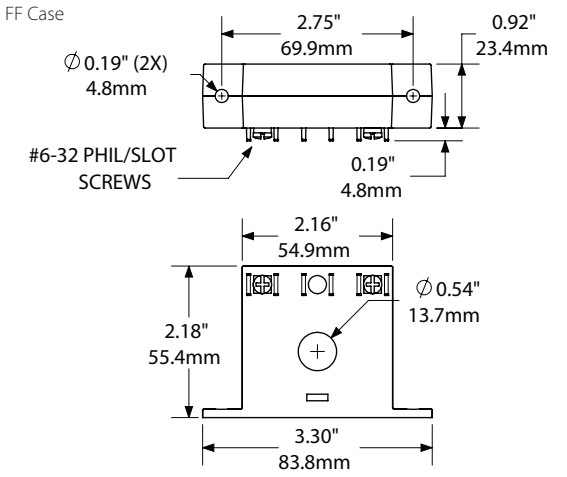

SP Case

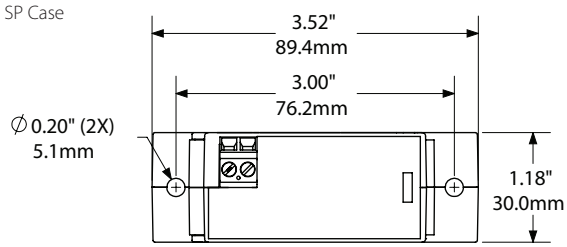

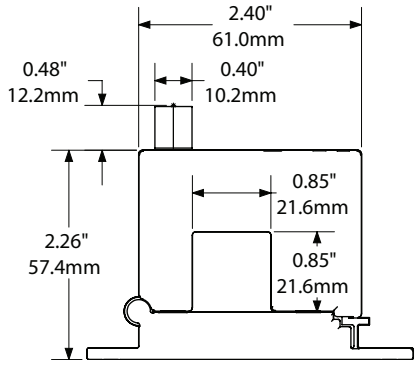

Current Sensing Switch Connections

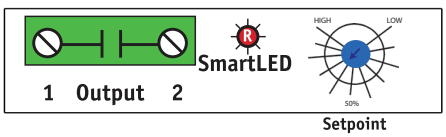

Notes:
Zinc plated screw terminals solid-core case.
Deadfront enclosed terminals split-core case.
14-22 AWG solid or stranded.
Not polarity sensitive.

Current Sensing Switch Specifications

Power Supply	None, self-powered
Input Range	1–150 A (adjustable)
Output Switch	Isolated solid-state switch (AC/DC)
Output Rating	• 150 mA @ 240 VAC/VDC N.O. • 200 mA @ 135 VAC/VDC N.C. (General use only)
Response Time	100 ms
Time Delay	2 seconds on initial energization
Isolation Voltage	UL listed to 1480 VAC
Hysteresis	Minimum 3% of Setpoint
Frequency Range	10–100 Hz
Case	UL94 V-0 Flammability Rated
Environmental	-4 to 122°F (-20 to 50°C) 0–95% RH, non-condensing
Listings	UL/cUL, CE

Current Sensing Switch Output Type

Normally open universal AC or DC solid-state contact, 150 mA to 240 V (maximum load across output contact) or normally closed universal AC or DC solid-state contact, 200 mA to 135 V (maximum load across output contact).

Current Sensing Switch Ordering Information

Sample Model Number: ASL1-NOU-FF
Solid-core AC current sensing switch with single turn setpoint adjustment normally open, Smart LED standard. (DIN rail adapters are included)

	(1)		(2)			(3)	
ASL		–				–	

(1) Full Scale Range

1	1–10 A (solid-core) 2–20 A (split-core)
2	10–50 A (solid-core) 20–50 A (split-core)
3	50–100 A
4	100–150 A

(2) Output Type

NOU	Normally Open
NCU	Normally Closed

(3) Case Style

FF	Solid-core, front terminals
SP	Split-core

3511 Charter Park Drive • San Jose, CA 95136
800.959.4014 • www.nktechnologies.com • sales@nktechnologies.com

원문: NK Technologies ASL 시리즈 카탈로그(영문) · 제조사 원문 자료입니다. 사양은 제조사 사정에 따라 변경될 수 있습니다.