**ASD SERIES**
893020019 Rev 3

# ASD SERIES
## Current Sensing Switches

ASD Series Current Sensing Switches provide a limit alarm contact with the easiest adjustment method ever designed. The single turn potentiometer allows the trip point to be set before the sensor is installed, or before the monitored circuit is energized. The LED display provides a quick visual indication of where the contact changes.




Features a single turn potentiometer and LED display
US Patent 9747776

### Current Sensing Switch Applications

**Electronic Proof of Operation**
- Current operated switches eliminate the need for multiple pipe or duct penetrations and are more reliable than electromechanical pressure or flow switches.

**Conveyors**
- Detects jams and overloads.
- Interlocks multiple conveyor sections.

**Pump Control**
- Output contact is adjusted so it is closed during normal operation, opening if the pump runs dry or there is a loss of head pressure for any reason.

**Cooling Towers**
- Monitor for overcurrent conditions caused by open duct access doors or undercurrent from a broken drive belt or coupling.

Conveyor Protection

If the conveyor jams, the solid-state contact opens to stop the infeed or drive motor.

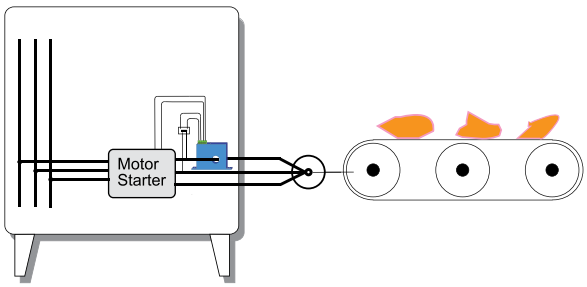


For additional Application Examples, go to www.nktechnologies.com/applications

### Current Sensing Switch Features

**Solid-state Output**
- N.O. or N.C. solid-state switch for control circuits up to 240 VAC.
- Compatible with most automation systems.

**External Powered**
- Allows for higher accuracy.

**Easily Adjustable and Precise Setpoint**
- Speeds startup.
- Improves the safety by allowing the trip point adjustment with no power through the sensing window.

**LED Display**
- Provides quick visual indication of where the contact changes. When current exceeds the setpoint, the display flashes on and off.
- Easiest and most accurate setpoint adjustment available.

**Built-in Mounting Feet**
- Simple, two-screw panel mounting or attach with DIN rail adapters (included).*

**UL/cUL Listed and CE Certified**
- Accepted worldwide.

*For information on the DIN rail accessories kit, see page 156.

NK Technologies
3511 Charter Park Drive • San Jose, CA 95136
800.959.4014 • www.nktechnologies.com • sales@nktechnologies.com

원문: NK Technologies ASD 시리즈 카탈로그(영문) · 제조사 원문 자료입니다. 사양은 제조사 사정에 따라 변경될 수 있습니다.

**ASD SERIES**
893020019 Rev 3



## Current Sensing Switch Dimensions

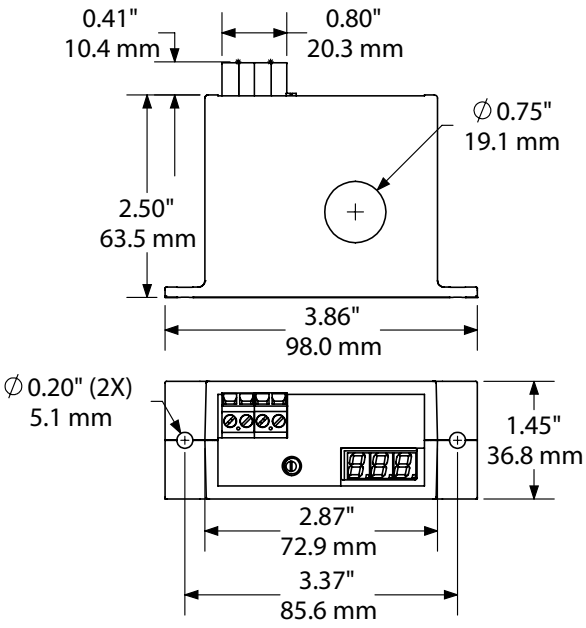


## Current Sensing Switch Specifications

| | |
|---|---|
| **Power Supply** | 24 VAC/VDC (18–28 V) |
| **Power Consumption** | <4.48 VA |
| **Setpoint Range** | • ASD1: 1–50 A (adjustable)<br>• ASD2: 4–200 A (adjustable) |
| **Output Switch** | Isolated solid-state switch |
| **Output Rating** | Max.: 1.0 A @ 240 VAC (general use) |
| **Off-state Leakage** | • 2.5 mA normally open<br>• 2.5 mA normally closed |
| **Accuracy** | +/- 1% FS |
| **Response Time** | 500 ms 5% over setpoint<br>200 ms 50% over setpoint<br>150 ms 100% over setpoint |
| **Hysteresis** | 5% |
| **Isolation Voltage** | 2200 VAC |
| **Frequency Range** | 40–100 Hz |
| **Case** | UL94 V-0 Flammability Rated |
| **Environmental** | -4 to 122°F (-20 to 50°C) Surrounding Air<br>0–95% RH, non-condensing |
| **Listings** | UL Listed to UL 508 (E129625), CE |

## Current Sensing Switch Connections

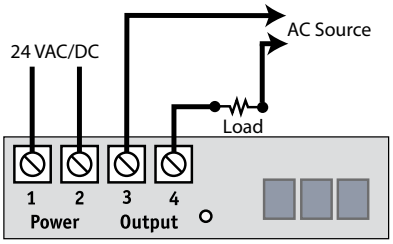


Display shows trip point in amps
so 15 A displays 015.

## Current Sensing Switch Ordering Information

Sample Model Number: ASD1-NOAC-24U-FL
Adjustable AC current operated switch, normally open, solid-core case.
(DIN rail adapters are included)

| (1) | | (2) | | | | (3) | | | (4) | |
|---|---|---|---|---|---|---|---|---|---|---|
| ASD | | – | | | | - | 2 | 4 | U | – | F | L |

(1) Range

| | |
|---|---|
| 1 | 1–50 A switch adjustment |
| 2 | 4–200 A switch adjustment |

(2) Output Contact

| | |
|---|---|
| NOAC | Normally Open, closes on current rise, AC control only |
| NCAC | Normally Closed, opens on current rise, AC control only |

(3) Power Supply

| | |
|---|---|
| 24U | 24 VAC or VDC |

(4) Case Style

| | |
|---|---|
| FL | Solid-core |

3511 Charter Park Drive • San Jose, CA 95136
800.959.4014 • www.nktechnologies.com • sales@nktechnologies.com

원문: NK Technologies ASD 시리즈 카탈로그(영문) · 제조사 원문 자료입니다. 사양은 제조사 사정에 따라 변경될 수 있습니다.