ATS SERIES WITH DIGITAL SETPOINT DISPLAY
893020018 Rev 2

ATS SERIES WITH DIGITAL SETPOINT DISPLAY

AC Current Transducer/Switch

ATS Series AC Current Sensors combine a current operated switch and transducer into a single package. The FL model features a digital display that gives visual indication of the setpoint for greater accuracy. The sensor provides a solid-state contact which will change state when the current exceeds an adjustable level or falls below the normal running current. This means reduced installation time, plus the option to have local control of a starter coil while at the same time sending the analog signal back to a controller housed in a separate cabinet.

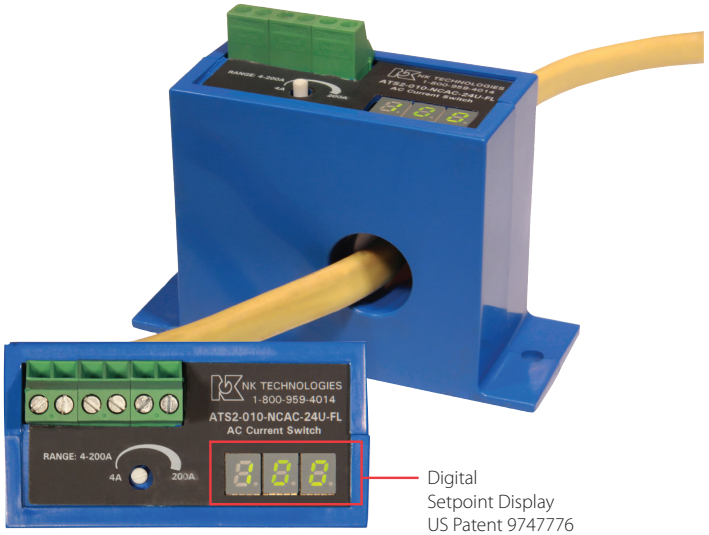

AC Transducer/Switch Applications

Electronic Proof of Operation
- Current operated switches eliminate the need for multiple pipe or duct penetrations and are more reliable than electromechanical pressure or flow switches.

Conveyors
- Detect jams and overloads.
- Interlock multiple conveyor sections.

Pump Control
- Provides signal to measure current and shuts down the pump if the current rises over the setpoint.

Cooling Towers
- Analog monitors time of use and contact opens if a filter clogs.

Pump Jam & Suction Loss Protection

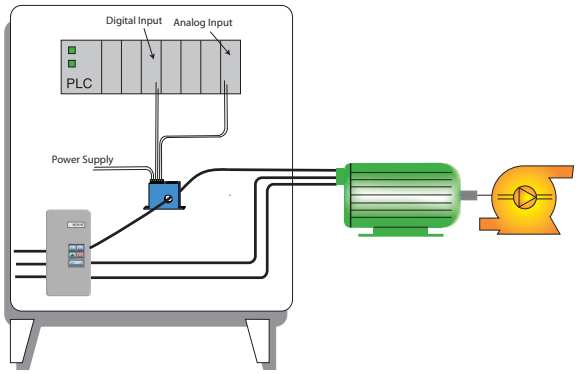

AC Transducer/Switch Features

Solid-state Output
- N.O. or N.C. solid-state switch for control circuits up to 240 VAC.
- Compatible with most automation systems.

External Powered
- Allows for higher accuracy.

Easily Adjustable and Precise Setpoint
- Speeds startup.

Analog Output
- Measures the current used at all times.

LED Display
- Provides quick visual indication of where the contact changes. Display flashes on and off when current has exceeded the setpoint.
- Easiest and most accurate setpoint adjustment available.

Built-in Mounting Feet
- Simple, two-screw panel mounting or attach with DIN rail brackets (included).*

UL/cUL and CE Approved
- Accepted worldwide.

*For information on the DIN rail accessories kit, see page 147.

For additional Application Examples, go to www.nktechnologies.com/applications

OEMs Test & Evaluation Units for OEMs
Free program expedites evaluation process. See page 3 for details.

NK Technologies
3511 Charter Park Drive • San Jose, CA 95136
800.959.4014 • www.nktechnologies.com • sales@nktechnologies.com

FIVE YEAR 5 WARRANTY RoHS Compliant

원문: NK Technologies ATS 디지털 시리즈 카탈로그(영문) · 제조사 원문 자료입니다. 사양은 제조사 사정에 따라 변경될 수 있습니다.

ATS SERIES WITH DIGITAL SETPOINT DISPLAY

893020018 Rev 2

AC Current Transducer/Switch Dimensions

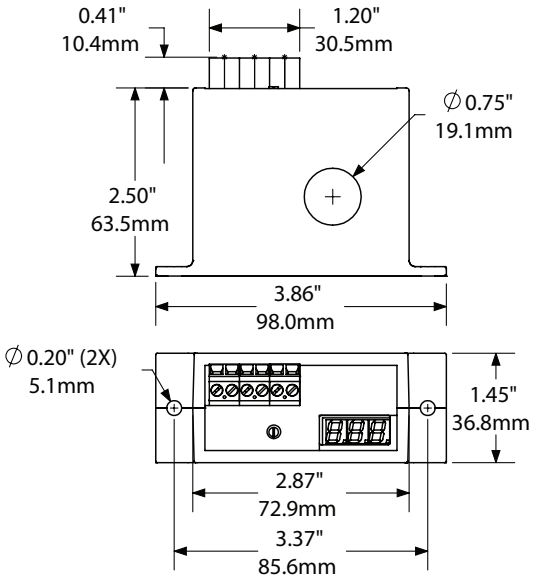

AC Current Transducer/Switch Connections

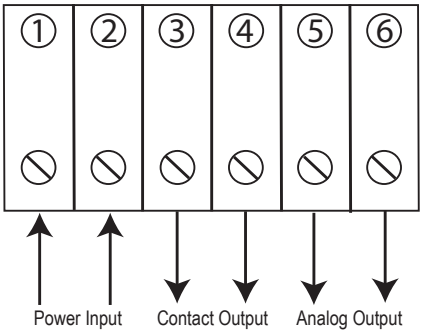

Display shows the trip point, and flashes when AC current exceeds that value. A trip point of 15 A is displayed as 015.

AC Current Transducer/Switch Specifications

Power Supply	24 VAC/VDC (18–28 V)
Power Consumption	160 mA max
Input Range	• ATS1: 0–50 A • ATS2: 0–200 A
Output Signal	• 420: 4-20 mA DC • 005: 0-5 VDC • 010: 0-10 VDC
Output Limit	• 420: 20 mA • 005: 5 VDC • 010: 10 VDC
Output Loading	• 420: 500 Ω max. • 005: 5 KΩ min. • 010: 5 KΩ min.
Accuracy	+/-1.0% FS
Response Time (Analog Output)	Average responding • <250 ms 90% step change • <500 ms 99.5% step change • <2000 ms 100% step change
Response Time (Switch Output)	• <500 ms for 5% over setpoint • <200 ms for 50% over setpoint • <150 ms for 100% over setpoint
Hysteresis	5%
Frequency Range	40-100 Hz
Setpoint Range	• ATS1:1–50 A (adjustable) • ATS2: 4–200 A (adjustable)
Output Switch	Isolated solid-state switch
Output Rating	1.0 A @ 240 VAC (general use)
Isolation Voltage	Tested to 1480 VAC
Case	UL94 V-0 Flammability Rated
Environmental	-4 to 122°F (-20 to 50°C) Surrounding Air 0–95% RH, non-condensing
Listings	UL/cUL, CE

AC Current Transducer/Switch Ordering Information

Sample Model Number: ATS1-420-NOAC-24U-FL

Adjustable AC current operated switch/transducer, normally open, solid-core case. (DIN rail adapters are included)

	(1)		(2)			(3)				(4)			(5)	
ATS		–				–				–	2	4	U	–	F	L

(1) Range

1	0–50 Analog, 1–50 switch adjustment
2	0–200 Analog, 4–200 switch adjustment

(2) Analog Signal Type

420	4–20 mA (powered by sensor)
005	0–5 VDC
010	0–10 VDC

(3) Output Contact

NOAC	Normally Open, closes on current rise, AC control only
NCAC	Normally Closed, opens on current rise, AC control only

(4) Power Supply

24U	24 VAC or VDC

(5) Case Style

FL	Solid-core

3511 Charter Park Drive • San Jose, CA 95136
800.959.4014 • www.nktechnologies.com • sales@nktechnologies.com

NK Technologies

원문: NK Technologies ATS 디지털 시리즈 카탈로그(영문) · 제조사 원문 자료입니다. 사양은 제조사 사정에 따라 변경될 수 있습니다.