ATS SERIES WITH ROTARY SWITCH SETPOINT
893020017 Rev 3

ATS SERIES WITH ROTARY SWITCH SETPOINT

AC Current Transducer/Switch

The ATS Series AC Current Sensors combine a current operated switch and transducer into a single package for use in AC current applications up to 1200 A. The large sensing window provides complete isolation between the primary circuit and the controls. The DIN rail mounting makes installation a breeze, and provides a very secure mounting that is resistant to conductor movement.



AC Transducer/Switch Applications

Large AC Motor Loads
- Produces an analog signal at all times to detect increases or decreases in current.
- Provides limit alarm contacts for over or undercurrent conditions.
- Extra large aperture allows for single or multiple conductor passage.

Main Service Entrance
- Allows a viewer to see the amount of current used at any time when connected to a standard panel meter.

Generators
- Measure the AC current produced or consumed.
- Detect mechanical problems before failure occurs.

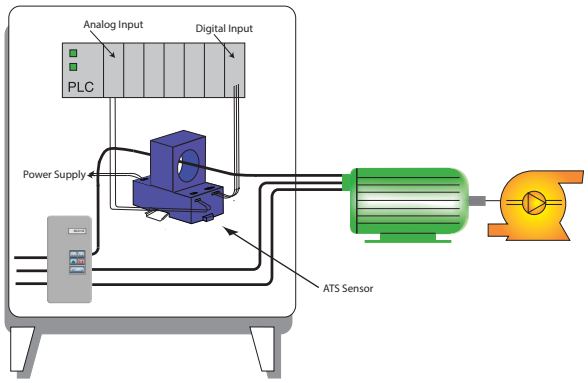

For additional Application Examples, go to www.nktechnologies.com/applications

AC Transducer/Switch Features

Easily Established Relay Actuation Point
- Patented rotary switch setpoint selection.
- Trip point indicated on the labeling.

Isolation
- Output is magnetically isolated from the input for safety.
- Eliminates insertion losses, no added burden.

Analog Signal Available At All Times
- 4–20 mA signal proportional to 0–1200 AC A.
- Reduces components by combining transducer and limit alarm (current switch).
- Analog signal powered from the sensor; no loop powered required.

DIN Rail Mounted Case*
- Integral DIN rail mount with spring loaded mounting clips.
- Makes installation a snap.

Failsafe Relay Action
- Single Pole Double Throw Relay changes state with power to the sensor.
- LED indication if power is removed from the sensor or primary current exceeds the adjustable trip point.
- Field-adjustable time delay from 0.5 to 12 seconds.

UL/cUL Approved
- Accepted worldwide.

*For information on the DIN rail accessories kit, see page 147.

NK Technologies
3511 Charter Park Drive • San Jose, CA 95136
800.959.4014 • www.nktechnologies.com • sales@nktechnologies.com

원문: NK Technologies ATS 로터리 시리즈 카탈로그(영문) · 제조사 원문 자료입니다. 사양은 제조사 사정에 따라 변경될 수 있습니다.

ATS SERIES WITH ROTARY SWITCH SETPOINT

893020017 Rev 3

AC Current Transducer/Switch Dimensions

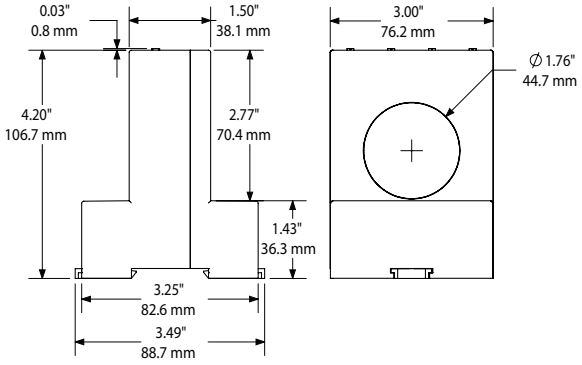

AC Current Transducer/Switch Connections

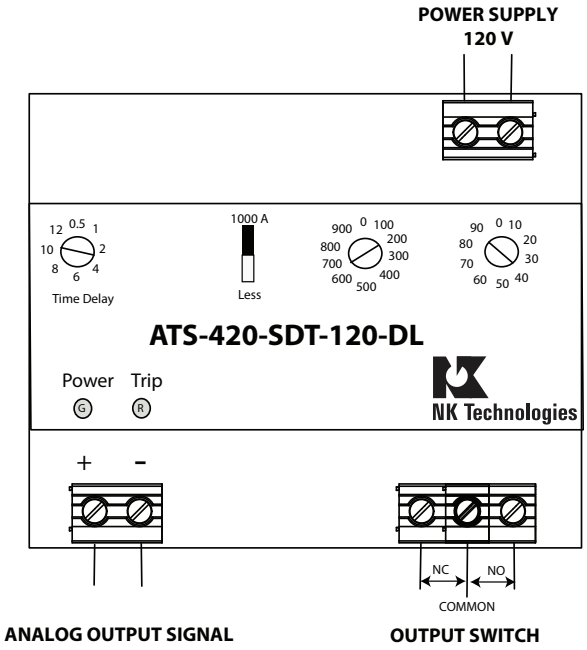

AC Current Transducer/Switch Output Type

Single pole, double throw relay-adjustable from 10 to 1200 A in 10 A increments. 4–20 mA signal proportional to 0–1200 A. Analog signal capped at 6 mA when trip point <150 A, 8 mA if trip point <300 A, 23 mA if the trip point is 310 A or higher.

Notes:
Dead front captive screw terminals.
12–22 AWG solid or stranded.
Observe polarity.

AC Current Transducer/Switch Specifications

Power Supply	• 120 VAC (108–132 V) • 24 VDC (22–26 V)
Power Consumption	<2 VA
Input Range	0–1200 A
Output Signal	4–20 mA
Output Limit	23 mA
Output Loading	600 Ω maximum
Accuracy	2% FS
Analog Response Time	600 ms to 90% step change
Hysteresis	5%
Frequency Range	10–100 Hz
Setpoint Range	10–1200 A
Output Switch	Electromechanical SPDT relay
Output Rating	1.0 A @ 125 VAC, 2 A @ 30 VDC
Time Delay	0.5-12 sec. (adjustable)
Isolation Voltage	UL listed to 2200 VAC
Case	UL94 V-0 Flammability Rated
Environmental	-4 to 122°F (-20 to 50°C) Surrounding Air 0–95% RH, non-condensing
Listings	UL/cUL

AC Current Transducer/Switch Ordering Information

Sample Model Number: ATS-420-SDT-24D-DL

Solid-core AC current operated switch/transducer combination, 0–1200 A range, 4–20 mA analog output, 24 VDC powered, adjustable relay trip point.

	(1)		(2)			(3)			(4)			(5)	
AT	S	–	4	2	0	–	S	D	T	–				–	D	L

(1) Full Scale Range

S	Combination (switch and transducer) 0-1200 A

(2) Output Signal

420	4–20 mA Note: maximum output depends on setpoint

(3) Contact Type

SDT	SPDT Relay

(4) Power Supply

24D	24 VDC
120	120 VAC

(5) Case Style

DL	Solid-core, DIN rail mounting

3511 Charter Park Drive • San Jose, CA 95136
800.959.4014 • www.nktechnologies.com • sales@nktechnologies.com

NK Technologies

원문: NK Technologies ATS 로터리 시리즈 카탈로그(영문) · 제조사 원문 자료입니다. 사양은 제조사 사정에 따라 변경될 수 있습니다.