ATP/ATPR-FL SERIES
292000110 Rev 2

ATP/ATPR-FL SERIES
AC Current Transducers

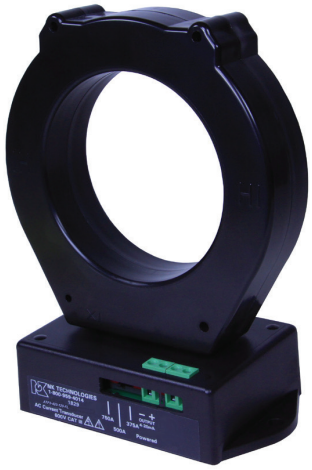

ATP/ATPR-FL Series AC Current Transducers are large-format solid-core transducers designed for high current applications from 375 A to 2000 A. Powered by 120 VAC/VDC or 24 VAC/VDC, the ATP/ATPR-FL Series takes advantage of available power supplies and eliminates the need for costly control power transformers. Options include average responding and True RMS versions, 0–5/10 VDC or 4–20 mA analog outputs and switch-selectable input ranges.

AC Current Transducer Applications

Commercial and Industrial MCC's
- Fits conveniently in motor control centers, senses current on industrial motors and provides analog inputs back to PLC or controller.

VFD or SCR Controlled Loads, Electronic Ballasts
- Helpful in monitoring VFD-controlled motors to provide operational status. Provides accurate measurement of ballast input power and phase angle fired SCRs.

Large Pumping Applications
- Ideal for proof-of-flow in water/wastewater, boiler and other industrial pumping applications 150 HP and over. 120 VAC/VDC or 24 VAC/VDC supply options allow for powering off of readily available supply, eliminating need for CPTs.

Power Distribution Centers (PDCs)
- Monitors current output on commercial generation equipment and serves as a current input for use in power consumption calculations.

AC Current Transducer Features

Large Aperture
- Accommodates large conductors or wire bundles.

Select the Right Output
- True RMS technology is accurate on distorted waveforms like those associated with VFD or SCR outputs.
- Average responding for use with linear, sinusoidal waveforms.

Jumper-selectable Ranges
- Reduces inventory.
- Eliminates zero and span pots.

Isolation
- Output is magnetically isolated from the input for safety.
- Eliminates insertion loss (voltage drop).

Designed for UL/cUL, CE Approval
- Accepted worldwide.

Centrifugal Pump Monitoring

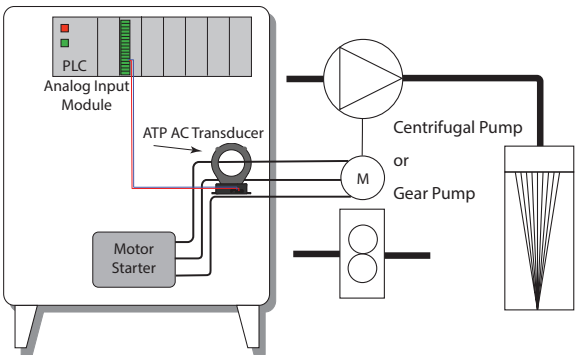

OEMs **Test & Evaluation Units for OEMs**
Free program expedites evaluation process. See page 3 for details.

For additional Application Examples, go to www.nktechnologies.com/applications

NK Technologies
3511 Charter Park Drive • San Jose, CA 95136
800.959.4014 • www.nktechnologies.com • sales@nktechnologies.com

FIVE YEAR 5 WARRANTY RoHS Compliant

원문: NK Technologies ATP/ATPR-FL 시리즈 카탈로그(영문) · 제조사 원문 자료입니다. 사양은 제조사 사정에 따라 변경될 수 있습니다.

ATP/ATPR-FL SERIES
292000110 Rev 2

AC Current Transducer Dimensions

FL Case

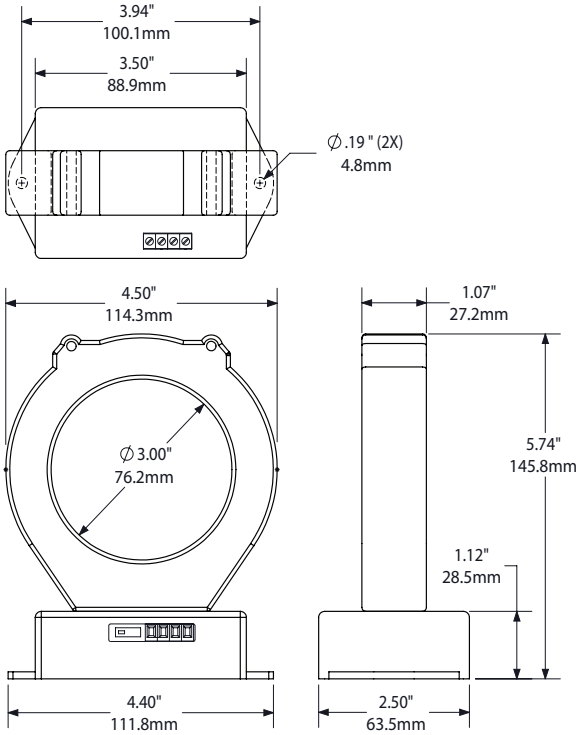

AC Current Transducer Connections

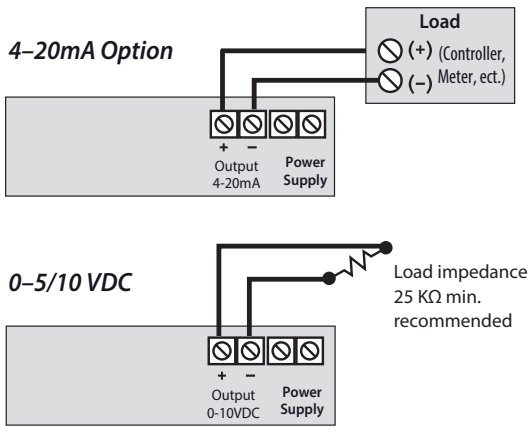

Notes:
Terminals are deadfront captive screw terminals.
Use 24-12 AWG solid or stranded.

AC Current Transducer Specifications

Power Supply	• 120 VAC/VDC (108–132 V) • 24 VAC/VDC (22–26 V)
Power Consumption	<2 VA
Output Signal	• -005 Model: 0–5 VDC • -010 Model: 0–10 VDC • -420 Model: 4–20 mA
Output Limit	• -005 Model: 112% (5.6 V) • -010 Model: 112% (11.2 V) • -420 Model: 112% (22.4 mA)
Output Loading	25 KΩ min.: VDC models 500 Ω max.: 4–20 mA models
Accuracy	1.0% FS
Response Time	• ATP: 100 ms (10–90% step change) • ATPR: 600 ms (10–90% step change)
Frequency Range	• ATP: 40–100 Hz, sinusoidal • ATPR:10–400 Hz
Isolation Voltage	Tested to 5 KV
Input Range (switch-selectable)	• ATP3/ATPR3: 0–375 A/500 A/750 A • ATP4/ATPR4: 0–1000 A/1333 A/2000 A
Case	UL94 V-0 Flammability Rated
Environmental	-4 to 122°F (-20 to 50°C) 0–95% RH, non-condensing
Listings	Designed for UL/cUL and CE approval

AC Current Transducer Ordering Information

Sample Model Number: ATPR3-420-120-FL
True RMS AC current transducer, 120 VAC/VDC powered with a 4–20 mA output, 375/500/750 A ranges in a solid-core case.

	(1)	(2)		(3)				(4)				(5)	
ATP			–				–				–	F	L

(1) Measurement

R	True RMS
	Average responding (blank)

(2) Full Scale Range

3	375, 500, 750 A
4	1000, 1333, 2000 A

(3) Output Signal

005	0–5 VDC
010	0–10 VDC
420	4–20 mA

(4) Power Supply

24U	24 VAC/VDC
120	120 VAC/VDC

(5) Case Style

FL	Solid-core

3511 Charter Park Drive • San Jose, CA 95136
800.959.4014 • www.nktechnologies.com • sales@nktechnologies.com

원문: NK Technologies ATP/ATPR-FL 시리즈 카탈로그(영문) · 제조사 원문 자료입니다. 사양은 제조사 사정에 따라 변경될 수 있습니다.