ATH SERIES
292000614 Rev 2

ATH SERIES
AC Current Transducer with Time Integration

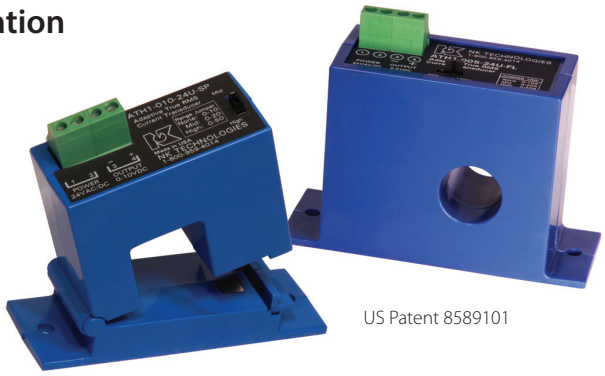

US Patent 8589101

ATH Series (patented) AC Current Transducers are the latest innovation from NK Technologies. Monitoring the current or power controlled by silicon-controlled rectifiers (SCRs) can be a challenge, especially the current used by heaters. When used to monitor zero-crossing (burst) fired SCRs, the ATH will provide an output signal directly proportional to the RMS amperage. Zero-crossing fired controls allow current to flow to the circuit for as short of a time period as one cycle, and off for several cycles. Most current sensors will not work well when there is no current present. This capability is important in case a heating element fails but the process continues operating, which could result in scrapped material.

AC Current Transducer Applications

Electrical Heaters
- Faster response than temperature sensors.
- Simplest method to monitor pulsed waveforms.

Burst-Fired Heating Controls

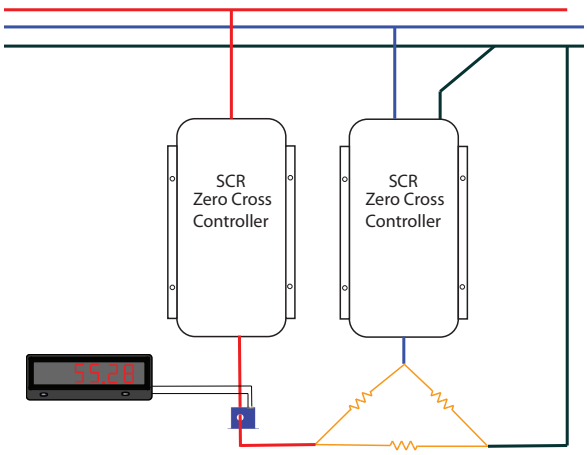

For additional Application Examples,
go to www.nktechnologies.com/applications

AC Current Transducer Features

Industry Standard Outputs
- 4–20 mA, 0–5 or 0–10 VDC.
- Compatible with most automation systems.

External Powered
- Split-core models powered with 24 VAC or DC.
- Solid-core models powered with 24 VAC or DC or 120 VAC.

Factory Calibrated
- No need for zero and span adjustment potentiometers.

RMS Output
- Accurate measurement of sinusoidal or pulsed current wave shapes.

Built-in Mounting Feet
- Simple, two-screw panel mounting or attach with DIN rail brackets (included).*

UL/cUL and CE Approved
- Accepted worldwide.

*For information on the DIN rail accessories kit, see page 147.

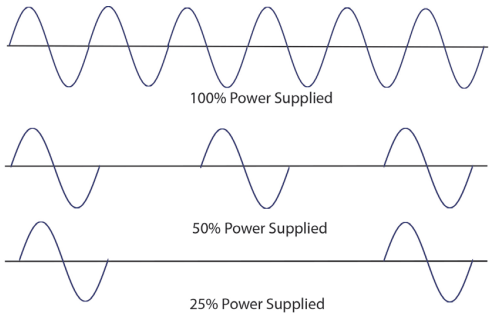

ATH AC current transducers will produce a signal proportional to the current used even when the controller is supplying power in one cycle increments. This is quite common as the "burst-fired" zero crossing switching method produces less harmonic distortion than phase-angle fired controls.

OEMs **Test & Evaluation Units for OEMs**
Free program expedites evaluation process. See page 3 for details.

NK Technologies
3511 Charter Park Drive • San Jose, CA 95136
800.959.4014 • www.nktechnologies.com • sales@nktechnologies.com

FIVE YEAR 5 WARRANTY RoHS Compliant

원문: NK Technologies ATH 시리즈 카탈로그(영문) · 제조사 원문 자료입니다. 사양은 제조사 사정에 따라 변경될 수 있습니다.

ATH SERIES
292000614 Rev 2

AC Current Transducer Dimensions

SP Case

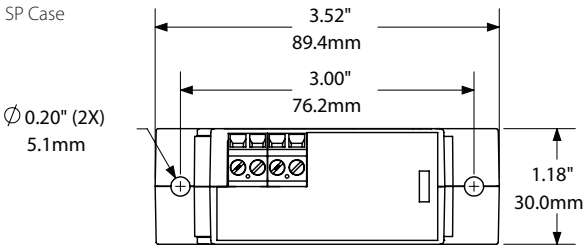

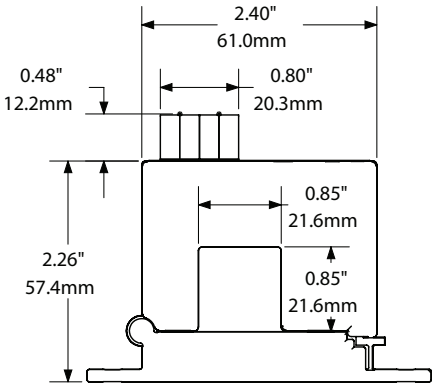

FL Case

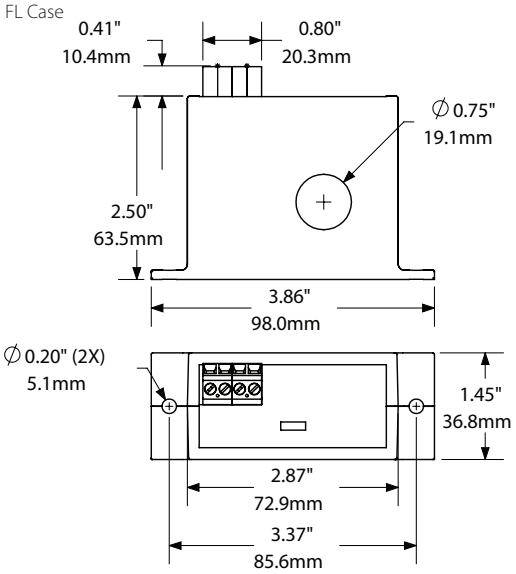

AC Current Transducer Connections

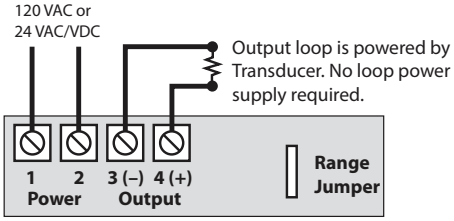

AC Current Transducer Specifications

Power Supply	• 120 VAC (+/-10%) solid-core only • 24 VAC/VDC (+/-10%) solid or split-core
Power Consumption	<2 VA
Output Signal	• 4–20 mA (20 mA maximum) • 0–5 VDC (5 VDC maximum) • 0–10 VDC (10 VDC maximum)
Output Loading	• 0–5 or 0–10 VDC: 10 KΩ min. • 4–20 mA: 500 Ω max.
Accuracy	1% FS
Response Time	• <30 ms + duty-period (FL) for 90% step change • <40 ms + duty-period (SP) for 90% step change • <50 ms + duty-period for 100% step change • <400 ms for 100% duty cycle • PWM Cycle Period: 12 ms (min.), 54 sec (max.) • 79 sec for timeout to default period • 206 ms for default period when absence of signal for 79 sec
Frequency Range	40-400 Hz
Isolation Voltage	Tested to 1240 VAC
Case	UL94 V-0 Flammability Rated
Environmental	-4 to 122°F (-20 to 50°C) 0–95% RH, non-condensing
Listings	UL/cUL, CE

AC Current Transducer Ordering Information

Sample Model Number: ATH1-420-24U-SP
AC current transducer, time proportioned, 4-20 mA output, 24 VAC or VDC power supply, split-core case. (DIN rail adapters are included)

ATH [ ] – [ ][ ][ ] – [ ][ ][ ] – [ ][ ]
(1) (2) (3) (4)

(1) Range

0	2 and 5 A
1	10, 20 and 50 A
2	100, 150 and 200 A

(2) Output Type

420	4–20 mA
005	0–5 VDC
010	0–10 VDC

(3) Power Supply

24U	24 VAC or VDC
120	120 VAC (FL only)

(4) Case Style

SP	Split-core
FL	Solid-core

3511 Charter Park Drive • San Jose, CA 95136
800.959.4014 • www.nktechnologies.com • sales@nktechnologies.com

NK Technologies

원문: NK Technologies ATH 시리즈 카탈로그(영문) · 제조사 원문 자료입니다. 사양은 제조사 사정에 따라 변경될 수 있습니다.