VTD-BD SERIES
292180031 Rev 2

VTD-BD SERIES
DC Voltage Transducers



VTD-BD Series Voltage Transducers are high-performance transducers for sensing voltage in DC powered installations. Applicable for use on circuits to 600 VDC, VTD-BD voltage transducers provide a fully isolated +/-5 VDC or +/-10 VDC output signal in response to DC voltages that change polarity. Housed in an easy-to-install DIN rail or panel mount case, the VTD-BD Series comes in a variety of ranges to suit many primary voltages.

Voltage Transducer Applications

Voltage Monitoring

- Detect below normal or "brown out" voltage conditions; protect against possible motor overheating.
- Identify conductor loss conditions by detecting voltage reduction in one motor lead.
- Monitor over voltage conditions associated with regenerative voltage to help in diagnosing/avoiding motor drive issues.
- Detect voltage conditions that may cause stress in or damage to soft starter components (SCRs).

DC Voltage Transducer

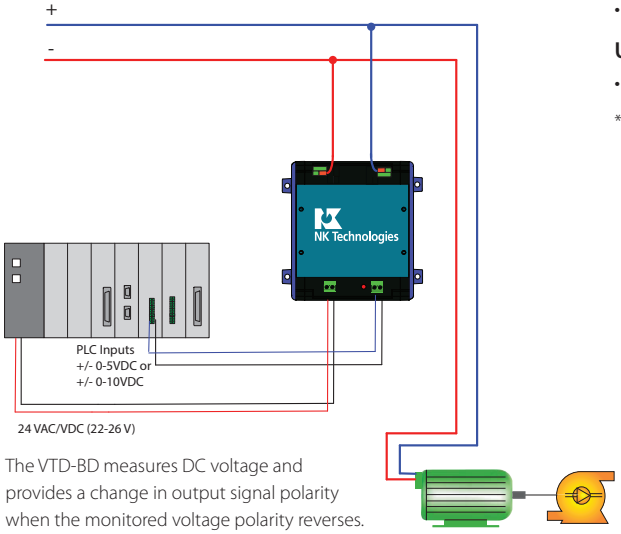

The VTD-BD measures DC voltage and provides a change in output signal polarity when the monitored voltage polarity reverses. Positive on upper right terminal creates a positive output signal; positive on upper left terminal creates a negative output signal.

Voltage Transducer Features

Wide Input Range Selection

- Six ranges of input voltages to best fit your requirements, from +/- 0–15 VDC to +/- 0–600 VDC.

+/-5 VDC or +/-10 VDC Sensor Powered Outputs

- Industry standard outputs makes use with existing controllers, data loggers and SCADA equipment easy and reliable.

Input/Output Isolation

- Input and output circuitry electrically isolated for improved safety of use.

DIN Rail or Panel Mount Case*

- Enclosure mounts quickly for an attractive installation.

UL/cUL and CE Approved

- Accepted worldwide.

*For information on the DIN rail accessories kit, see page 147.

For additional Application Examples, go to www.nktechnologies.com/applications

NK Technologies
3511 Charter Park Drive • San Jose, CA 95136
800.959.4014 • www.nktechnologies.com • sales@nktechnologies.com

원문: NK Technologies VTD-BD 시리즈 카탈로그(영문) · 제조사 원문 자료입니다. 사양은 제조사 사정에 따라 변경될 수 있습니다.

VTD-BD SERIES
292180031 Rev 2

Voltage Transducer Dimensions

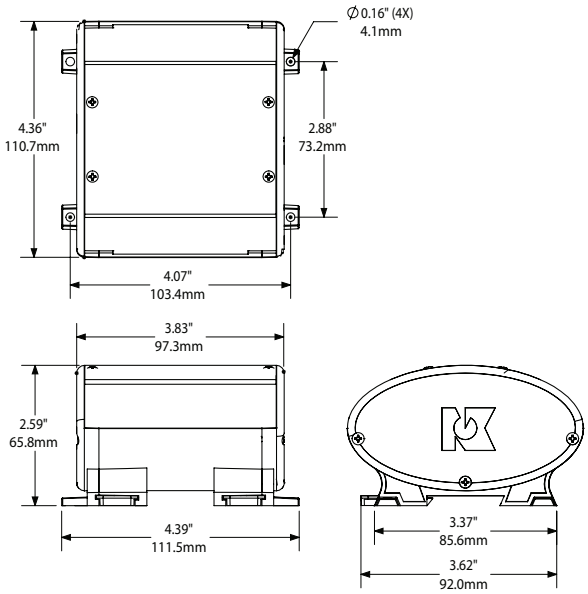

Voltage Transducer Connections

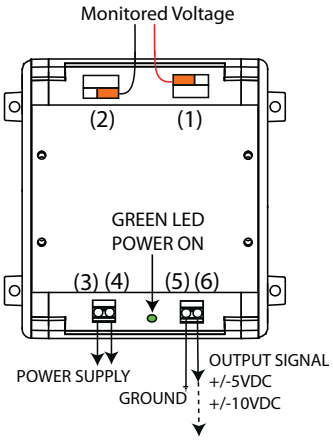

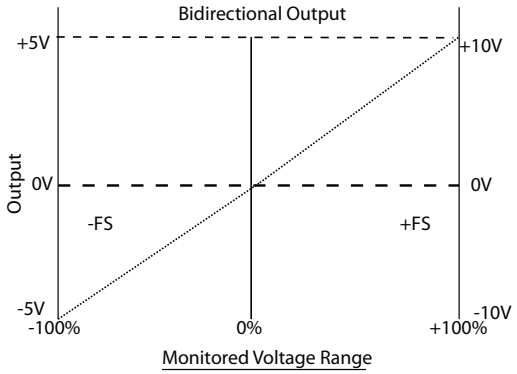

Voltage Transducer Specifications

Power Supply	24 VAC/VDC (22–26V); power supply is isolated from output signal
Power Consumption	<2 VA
Input Range (+/-)	15 V, 25 V, 50 V, 150 V, 300 V, 600 VDC
Input Impedance	>160 KΩ
Output Signal	• +/-5 VDC • +/-10 VDC
Output Loading	>10 KΩ
Response Time	500 ms (10–90% step change)
Accuracy	1.0% of FS
Isolation Voltage	UL listed to 2200 VAC
Frequency Range	DC
Case	UL94 V-0 Flammability Rated
Environmental	-4 to 122°F (-20 to 50°C) 0–95% RH, non-condensing
Listings	UL/cUL, CE

Voltage Transducer Ordering Information

Sample Model Number: VTD0-010-24U-BD-OS
DC voltage transducer with 15 V range, +/-10 VDC proportional output; 24 V externally powered, bidirectional output with a DIN rail compatible case.

	(1)		(2)			(3)			(4)		(5)	
VTD		–				–	2	4	U	–	B	D	–	O	S

(1) Nominal Range

0	+/-15 VDC
1	+/-25 VDC
2	+/-50 VDC
3	+/-150 VDC
4	+/-300 VDC
5	+/-600 VDC

(2) Output Signal

005	+/-5 VDC
010	+/-10 VDC

(3) Supply Voltage

24U	24 VAC/VDC external power supply

(4) Output Type

BD	Bidirectional output

(5) Case

OS	DIN rail or panel mount

Voltage Transducers

OEMs Test & Evaluation Units for OEMs
Free program expedites evaluation process. See page 3 for details.

3511 Charter Park Drive • San Jose, CA 95136
800.959.4014 • www.nktechnologies.com • sales@nktechnologies.com

NK Technologies

원문: NK Technologies VTD-BD 시리즈 카탈로그(영문) · 제조사 원문 자료입니다. 사양은 제조사 사정에 따라 변경될 수 있습니다.