VTU-OS SERIES
292180030 Rev 2

VTU-OS SERIES
High Voltage DC/AC Voltage Transducers



VTU-OS Series Voltage Transducers provide very high accuracy and safety in a panel or DIN rail mounted case. The one sensor design can measure DC or AC circuit voltages to 1200 volts, and produce an analog signal directly proportional to the voltage connected. This provides a very valuable tool to spot issues with power generation (conventional and alternative sources) like brownouts and phase loss. The voltage will be present on the line side of a disconnect even when the breaker or switch is open.

Voltage Transducer Applications

Photovoltaic Panels
- Connecting panel outputs in series increases the voltage sent from the panels to the load up to 1200 volts DC. The VTU is designed to measure this safely.

Water Delivery and Treatment
- Measure the AC voltage to pumps and aerators and shut them down if the supplied voltage falls to a dangerous level.

Cranes and Lifting Apparatus
- DC motors are used to lift, place and position heavy objects, as they have full torque capacity at zero speed. Use a voltage transducer to be sure that the field windings have voltage to keep the motor speed under control.

VTU-OS Measures Both AC and DC Voltages

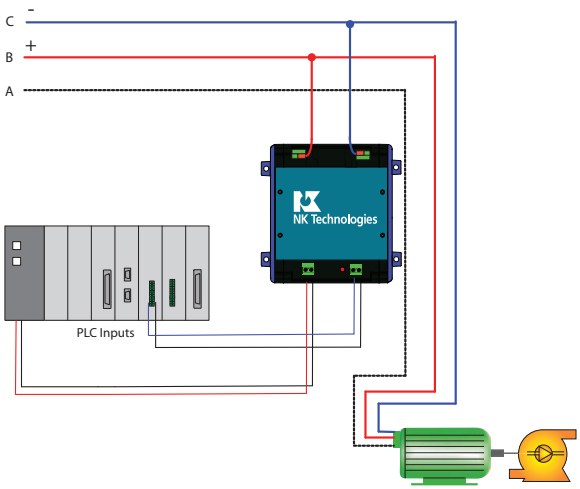

Voltage Transducer Features

Industry Standard Output Options
- 4–20 mA, 0–5 and 0–10 VDC.
- Compatible with most automation and control systems.
- Output proportional to RMS voltage.

Externally Powered
- 24 VAC or VDC with low power consumption.

Simple Conductor Termination
- Primary circuit uses self-tightening terminals.
- Power supply and output terminals are finger-safe.

Panel or DIN Rail Mount Options*
- If a DIN rail is not available, use the screw mounting option to attach to a back panel.
- Power supply is isolated from input and output.

UL/cUL Approved, CE
- Accepted worldwide.

*For information on the DIN rail accessories kit, see page 147.

NK Technologies
3511 Charter Park Drive • San Jose, CA 95136
800.959.4014 • www.nktechnologies.com • sales@nktechnologies.com

원문: NK Technologies VTU-OS 시리즈 카탈로그(영문) · 제조사 원문 자료입니다. 사양은 제조사 사정에 따라 변경될 수 있습니다.

VTU-OS SERIES
292180030 Rev 2

Voltage Transducer Dimensions

OS Case

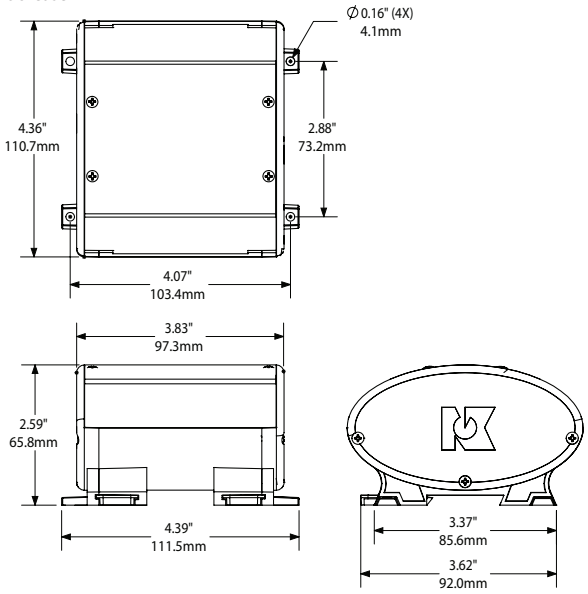

Voltage Transducer Connections

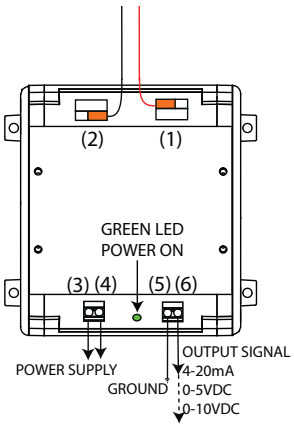

Voltage Transducer Specifications

Power Supply	24 VAC/VDC (22–26 VAC or VDC); power supply is isolated from output signal
Power Consumption	<4 VA
Input Range	0–800, 1000 or 1200 VAC or VDC
Output Signal	• 4–20 mA • 0–5 VDC • 0–10 VDC
Output Loading	• 4–20 mA: <400 Ω • 0–5/10 VDC: >100 KΩ
Response Time	100 ms
Accuracy	<1% FS
Isolation Voltage	UL listed to 4700 VAC
Frequency Range	0–400 Hz
Case	UL94 V-0 Flammability Rated
Environmental	-4 to 140°F (-20 to 60°C) 0–95% RH, non-condensing
Listings	UL/cUL, CE

Voltage Transducer Ordering Information

Sample Model Number: VTU10-420-24U-OS
AC or DC voltage transducer, 0–1000 V primary, 4–20 mA secondary, 24 VAC/VDC power, DIN or panel mount case.

	(1)			(2)			(3)			(4)	
VTU			–				2	4	U	O	S

(1) Range

8	0–800 V
10	0–1000 V
12	0–1200 V

(2) Output Type

005	0–5 VDC
010	0–10 VDC
420	4–20 mA

(3) Supply Voltage

24U	24 VAC/VDC external power supply

(4) Case Style

OS	DIN rail or panel mounting case

OEMs Test & Evaluation Units for OEMs
Free program expedites evaluation process. See page 3 for details.

3511 Charter Park Drive • San Jose, CA 95136
800.959.4014 • www.nktechnologies.com • sales@nktechnologies.com

원문: NK Technologies VTU-OS 시리즈 카탈로그(영문) · 제조사 원문 자료입니다. 사양은 제조사 사정에 따라 변경될 수 있습니다.